HAND DELIVERED
2010.00067
JAN 07 2010

UTAH DIVISION OF
SOLID & HAZARDOUS WASTE

Tooele Chemical Agent Disposal Facility (TOCDF)

Request for a

CLASS 3 MODIFICATION

to the

TOCDF RCRA Permit

Request Number	TOCDF-A10-03-1092
Request Title	Install and Operate Area 10 Incinerator
EPA ID Number	UT 5210090002

Attachment 4

Facility and Process and Instrument Drawings (P&ID)

DRAWING STATUS									
NO	DATE	REVISION DESCRIPTION	CHKD	PROJECT ENGR	PROJ ENGR	QC ENGR	PROJ MGR	SAFETY MGR
OAa	4/9/09	ISSUED FOR 50% DESIGN REVIEW WEEKLY UPDATE SUBMITTAL	DJG					
OAb	4/14/09	ISSUED FOR 50% DESIGN REVIEW WEEKLY UPDATE SUBMITTAL	DJG					
OAc	5/14/09	ISSUED FOR 50% DESIGN REVIEW WEEKLY UPDATE SUBMITTAL	DJG					
OB	5/21/09	ISSUED FOR 50% DESIGN FINAL WEEKLY UPDATE SUBMITTAL	DJG					
OC	7/31/09	ISSUED FOR 95% DESIGN REVIEW WEEKLY UPDATE SUBMITTAL	DJG					
1	10/8/09	ISSUED FOR 95% DESIGN FINAL	DJG					
2	11/12/09	DRB COMMENTS INCORPORATED	SDH					

NOTES:

1. FOR GENERAL MASONRY NOTES SEE DRAWING EG-22-A-8210.
2. FOR DOOR SCHEDULE SEE DWG EG-22-A-8211 SHT 7
3. FOR ROOM FINISH SCHEDULE SEE DWG EG-22-A-8211 SHT 9
4. FOR DOOR DETAILS SEE DWG EG-22-A-8211 SHT 8.
5. FOR FOUNDATION PLAN SEE DWG EG-22-S-8212 SHT 1
6. REMOVE ALL EXIST WATER PROOFING, COATINGS, ETC. FROM EXIST CONC. WALL AND APPLY "EPOLOIDS" EPOXY COATING SYSTEM OR APPROVED EQUAL.
7. THE PREFABRICATED ENVIRONMENTAL CONTROL SYSTEM WILL BE PROVIDED BY EG&G. ERECTION AND MODIFICATIONS (FOUNDATION, SUMPS, WALLS, PAINT, ETC.) ARE TO BE PERFORMED BY THE SUBCONTRACTOR
8. THE PAS STACK WILL BE PROVIDED BY EG&G; INSTALLATION IS TO BE PERFORMED BY THE SUBCONTRACTOR.

LEGEND

(101) DENOTES DOOR NUMBER

[101] DENOTES ROOM NUMBER

(101) DENOTES WINDOW NUMBER

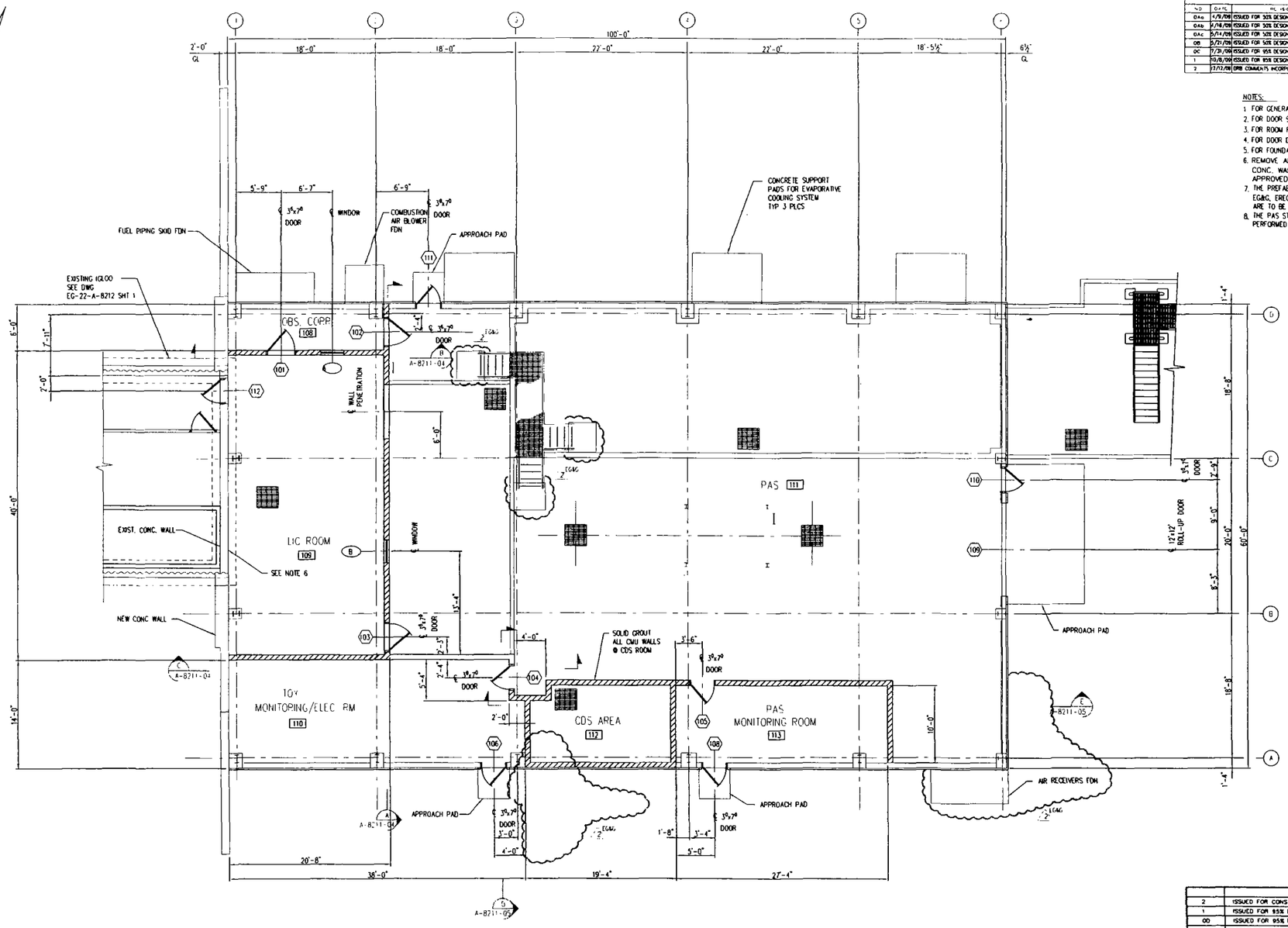

ARCHITECTURAL FLOOR PLAN

Symbol	Description	Date	Approved
	Revisions		
2	ISSUED FOR CONSTRUCTION		
1	ISSUED FOR 95% DESIGN FINAL	10/8/09	
OD	ISSUED FOR 95% DESIGN FINAL	9/18/09	
OC	ISSUED FOR 95% DESIGN REVIEW	7/31/09	
OB	ISSUED FOR 50% DESIGN FINAL	5/21/09	
OA	ISSUED FOR BID	4/29/09	
OA	ISSUED FOR 50% DESIGN REVIEW	4/9/09	

DEPARTMENT OF THE ARMY
PROGRAM MANAGER FOR
CHEMICAL DEMILITARIZATION
ABERDEEN PROVING GROUND, MARYLAND

US ARMY ENGINEER DISTRICT SACRAMENTO
CORPS OF ENGINEERS
SACRAMENTO, CALIFORNIA

EG&G A Division of URS

US Army Corps of Engineers

TOOELE ARMY DEPOT
TOOELE, UTAH

CHEMICAL STOCKPILE DISPOSAL PROGRAM
AREA 10 LIQUID INCINERATOR
ENVIRONMENTAL CONTROL SYSTEM & PROCESS CONTROL BASE
ARCHITECTURAL FLOOR PLAN

Drawn by: DJG	Date: 02/23/09			
Checked by: KWO	EG&G Approved:	Scale:	Sheet reference number:	EG&G Contract No. DACA87-89-C-0076
Engineer:	PMCD Mgr Concur:	3/16" = 1'-0"	EG-22-A-8211	Sheet 01 of 11 / Rev 2

JOB INDUSTRIAL SERVICES, INC.
E08-258EGG

UNCONTROLLED COPY-UNLESS STAMPED OTHERWISE BY DCC 1

DRAWING STATUS										
NO	DATE	REVISION DESCRIPTION	DR. BY	CHK	PROJECT MGR	CHIEF ENGR	TOC ENGR	PROJECT ENGR	QA-QC MGR
OAA	4/3/09	ISSUED FOR 50% DESIGN REVIEW WEEKLY UPDATE SUBMITTAL	DJC						
OAB	4/21/09	ISSUED FOR 50% DESIGN REVIEW WEEKLY UPDATE SUBMITTAL	DJC						
OAC	5/11/09	ISSUED FOR 50% DESIGN REVIEW WEEKLY UPDATE SUBMITTAL	DJC						
OB	5/21/09	ISSUED FOR 50% DESIGN FINAL WEEKLY UPDATE SUBMITTAL	DJC						
OC	7/21/09	ISSUED FOR 95% DESIGN FINAL WEEKLY UPDATE SUBMITTAL	KWO						
OC	10/8/09	ISSUED FOR 95% DESIGN FINAL	DJC						
2	12/21/09	DPS COMMENTS INCORPORATED	SDM						

NOTES:

1. FOR GENERAL STEEL NOTES SEE DRAWING EG-22-S-8230 SHT 1
2. FOR GENERAL CONCRETE NOTES SEE DRAWING EG-22-S-8210 SHT 1
3. FOR DOOR SCHEDULE SEE DWG EG-22-A-8211 SHT 7
4. FOR ROOM FINISH SCHEDULE SEE DWG EG-22-A-8211 SHT 9
5. FOR FOUNDATION PLAN SEE DWG EG-22-S-8213 SHT. 1
6. THE IGLOO IS A PREEXISTING STRUCTURE PROVIDED BY EG&G. ALL MODIFICATIONS SHOWN (FOUNDATION, SUMPS, WALLS, PAINT, ETC.) ARE TO BE PERFORMED BY THE SUBCONTRACTOR

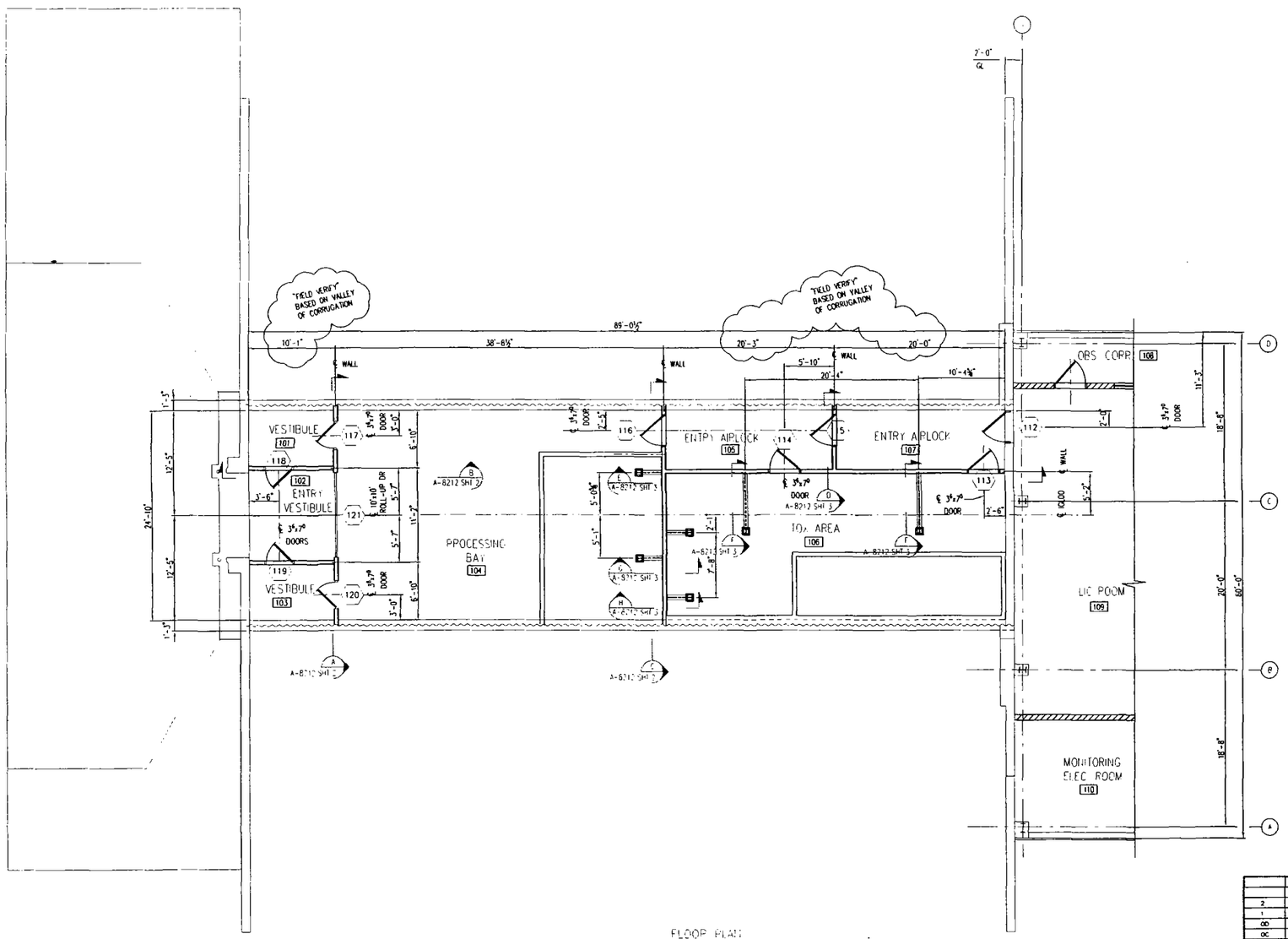

FLOOR PLAN

Symbol	Description	Date	Approved
	Revisions		
2	ISSUED FOR CONSTRUCTION		
1	ISSUED FOR 95% DESIGN FINAL	10/8/09	
OD	ISSUED FOR 95% DESIGN FINAL	9-18-09	
OC	ISSUED FOR 95% DESIGN REVIEW	7/21/09	
OB	ISSUED FOR 50% DESIGN FINAL	5/21/09	
OA	ISSUED FOR 50% DESIGN REVIEW	4/9/09	

DEPARTMENT OF THE ARMY
PROGRAM MANAGER FOR
CHEMICAL DEMILITARIZATION
ABERDEEN PROVING GROUND, MARYLAND

US ARMY ENGINEER DISTRICT SACRAMENTO
CORPS OF ENGINEERS
SACRAMENTO, CALIFORNIA

EG&G Division of URS

US Army Corps of Engineers

TOOELE ARMY DEPOT
TOOELE, UTAH

CHEMICAL STOCKPILE DISPOSAL PROGRAM
AREA 10 LIQUID INCINERATOR
IGLOO ARCHITECTURAL FLOOR PLAN

JIS INDUSTRIAL SERVICES, INC.
E08-258EGG

Drawn by: DJC/KWO	Date: 02/17/09		
Checked by: DJC	EG&G Approved:	Scale:	Sheet reference number:
Engineer:	PMCD Mgr Concur:	3/16"=1'-0"	EG-22-A-8212

EG&G Contract No. DACA87-89-C-0076
Sheet 01 of 03
Rev 2

UNCONTROLLED COPY-UNLESS STAMPED OTHERWISE BY DCC 1

DRAWING STATUS									
NO	DATE	REVISION DESCRIPTION	DRAWN BY	CHK	PROJ ENGR	PROJ CHIEF	DV ENGR	ENGRG MGR	PROJ MGR
OA	4/30/09	ISSUED FOR 50% DESIGN REVIEW WEEKLY UPDATE SUBMITTAL	DJG						
OB	5-28-09	ISSUED FOR 50% DESIGN FINAL WEEKLY UPDATE SUBMITTAL	DJG						
OBa	6/8/09	ISSUED FOR 50% DESIGN FINAL WEEKLY UPDATE SUBMITTAL	DJG						
OC	7/21/09	ISSUED FOR 95% DESIGN REVIEW WEEKLY UPDATE SUBMITTAL	DJG						
1	10/8/09	ISSUED FOR 95% DESIGN FINAL	DJG						
2	12/16/09	DRB COMMENTS INCORPORATED	SDH						

NOTES:

1. COORDINATES & ELEVATIONS ARE BASED ON EXISTING TOOLE ARMY DEPOT DRAWINGS
2. HAND DIGGING REQUIRED 2'-0" EACH SIDE AND ABOVE EXISTING UNDERGROUND UTILITIES
3. THE IQLOO IS A PREEXISTING STRUCTURE PROVIDED BY EG&G. ALL MODIFICATIONS SHOWN (FOUNDATION, SUMPS, WALLS, PAINT, ETC.) ARE TO BE PERFORMED BY THE SUBCONTRACTOR.
4. THE PREFABRICATED ENVIRONMENTAL CONTROL SYSTEM WILL BE PROVIDED BY EG&G; ERECTION AND MODIFICATIONS (FOUNDATION, SUMPS, WALLS, PAINT, ETC.) ARE TO BE PERFORMED BY THE SUBCONTRACTOR
5. THE PAS STACK WILL BE PROVIDED BY EG&G; INSTALLATION IS TO BE PERFORMED BY THE SUBCONTRACTOR.
6. THE THREE HVAC FILTER BANKS WILL BE PROVIDED BY EG&G; INSTALLATION IS TO BE PERFORMED BY THE SUBCONTRACTOR.
7. THE CONTROL CENTER EQUIPMENT ENCLOSURE, EMERGENCY GENERATOR ENCLOSURE AND ELECTRICAL EQUIPMENT ENCLOSURE WILL BE PROVIDED AND INSTALLED BY SEPARATE SUBCONTRACTOR.
8. ALL OTHER ITEMS (WALLS, FOUNDATIONS, NEW UN-NAMED ROADS, STRUCTURAL SUPPORTS, ETC.) ARE TO BE SUPPLIED AND INSTALLED BY THE SUBCONTRACTOR.

LEGEND:

- DENOTES ¾" GRAVEL SURFACING 6" THICK EL 5122'-6" (NOM.)
- NEW ASPHALT SURFACE
- CONTROL POINT
- AREA DRAINAGE FLOW DIRECTION

REFERENCE DRAWINGS

EG-22-C-8210	OVERALL SITE PLAN
EG-22-C-8214	SITE PAVING & ROAD SECTIONS
EG-22-S-8211	FOUNDATION LOCATION PLAN

APPLICABLE TOCDF SPECIFICATIONS

PLEASE REFER TO THE FOLLOWING SPECIFICATIONS FOR MATERIALS, COATING, TESTING, SUBMITTALS, QC, ETC. SHOULD THERE BE A DISCREPANCY NOTED BETWEEN DRAWING NOTES AND THESE SPECIFICATIONS, THE MORE STRINGENT REQUIREMENTS WILL TAKE PRECEDENCE. IN THE CASE OF DESCREPANCIES BETWEEN THE DRAWINGS AND THESE SPECIFICATIONS, THE DRAWINGS WILL TAKE PRECEDENCE

SPECIFICATION		TITLE
02210	REV 2	EARTHWORK
02231	REV 1	STABILIZED-AGGREGATE BASE COURSE
02232	REV 1	SELECT-MATERIAL SUB BASE COURSE
02501		BITUMINOUS PRIME COAT
02502		BITUMINOUS TACK COAT
02511		BITUMINOUS SURFACE COURSE (CENTRAL PLANT HOT MIX)
02512	REV 1	CONCRETE PAVEMENT
02513	REV 1	CONCRETE SIDEWALKS CURBS AND GUTTERS
02514	REV 1	JOINT SEALING IN CONCRETE PAVEMENTS
03100	REV 1	STRUCTURAL CONCRETE FORMWORK
03200	REV 1	CONCRETE REINFORCEMENT
03250	REV 1	JOINTS AND WATERSTOPS
03300	REV 1	CONCRETE FOR BUILDING CONSTRUCTION AND OTHER

Revisions			
2	ISSUED FOR CONSTRUCTION		
1	ISSUED FOR 95% DESIGN FINAL	10/8/09	
OD	ISSUED FOR 95% DESIGN FINAL	9-18-09	
OC	ISSUED FOR 95% DESIGN REVIEW	7-21-09	
OB	ISSUED FOR 50% DESIGN FINAL	5-28-09	
OA	ISSUED FOR 50% DESIGN REVIEW	4/23/09	
Symbol	Description	Date	Approved

DEPARTMENT OF THE ARMY
PROGRAM MANAGER FOR
CHEMICAL DEMILITARIZATION
ABERDEEN PROVING GROUND, MARYLAND

US ARMY ENGINEER DISTRICT SACRAMENTO
CORPS OF ENGINEERS
SACRAMENTO, CALIFORNIA

EG&G A Division of CH2M

US Army Corps of Engineers

TOOELE ARMY DEPOT
TOOELE, UTAH

CHEMICAL STOCKPILE DISPOSAL PROGRAM
AREA 10 LIQUID INCINERATOR
SITE PAVING & GRADING PLAN

Drawn by: DJG	Date: 04/22/09			
Checked by: TM	EG&G Approved:	Scale:	Sheet reference number:	EG&G Contract No. DACA87-89-C-0076
Engineer	PMCD May Concur:	1" = 20'	EG-22-C-8213	Sheet 01 of 01 / Rev. 2

JIS 1988 INDUSTRIAL SERVICES, INC.
E08-258EGG

UNCONTROLLED COPY-UNLESS STAMPED OTHERWISE BY DCC

2 UNCONTROLLED COPY - UNLESS STAMPED OTHERWISE BY DCC 1

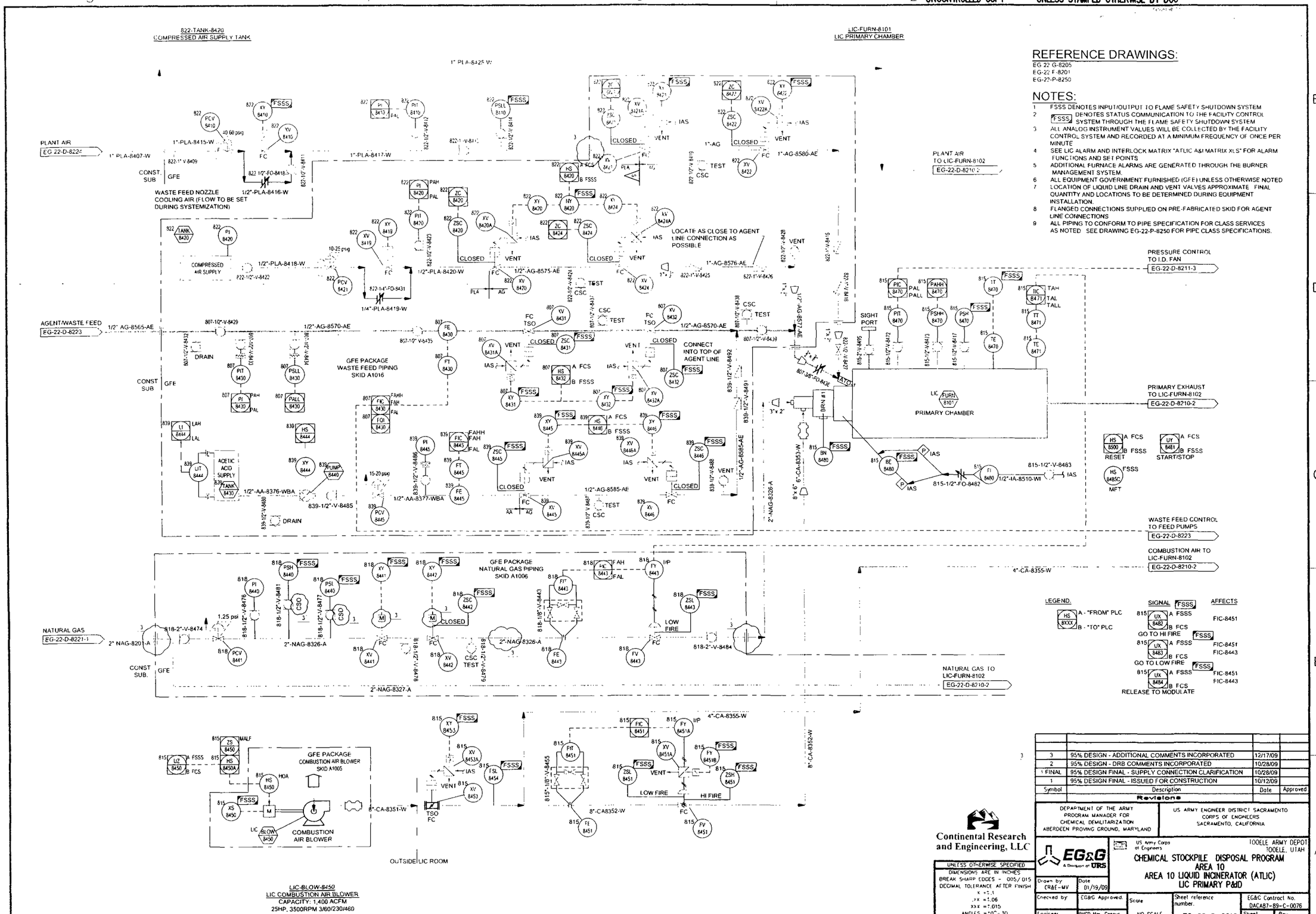

REFERENCE DRAWINGS:

EG 22 G-8205
EG-22 F-8201
EG-22-P-8250

NOTES:

1. FSSS DENOTES INPUT/OUTPUT TO FLAME SAFETY SHUTDOWN SYSTEM
2. FSSS DENOTES STATUS COMMUNICATION TO THE FACILITY CONTROL SYSTEM THROUGH THE FLAME SAFETY SHUTDOWN SYSTEM
3. ALL ANALOG INSTRUMENT VALUES WILL BE COLLECTED BY THE FACILITY CONTROL SYSTEM AND RECORDED AT A MINIMUM FREQUENCY OF ONCE PER MINUTE
4. SEE LIC ALARM AND INTERLOCK MATRIX "ATLIC A&I MATRIX XLS" FOR ALARM FUNCTIONS AND SET POINTS
5. ADDITIONAL FURNACE ALARMS ARE GENERATED THROUGH THE BURNER MANAGEMENT SYSTEM.
6. ALL EQUIPMENT GOVERNMENT FURNISHED (GFE) UNLESS OTHERWISE NOTED
7. LOCATION OF LIQUID LINE DRAIN AND VENT VALVES APPROXIMATE FINAL QUANTITY AND LOCATIONS TO BE DETERMINED DURING EQUIPMENT INSTALLATION
8. FLANGED CONNECTIONS SUPPLIED ON PRE-FABRICATED SKID FOR AGENT LINE CONNECTIONS
9. ALL PIPING TO CONFORM TO PIPE SPECIFICATION FOR CLASS SERVICES AS NOTED SEE DRAWING EG-22-P-8250 FOR PIPE CLASS SPECIFICATIONS.

LIC-BLOW-8450
LIC COMBUSTION AIR BLOWER
CAPACITY: 1,400 ACFM
25HP, 3500RPM 3/60/230/460

Symbol	Description	Date	Approved
3	95% DESIGN - ADDITIONAL COMMENTS INCORPORATED	12/17/09	
2	95% DESIGN - DRB COMMENTS INCORPORATED	10/28/09	
1 FINAL	95% DESIGN FINAL - SUPPLY CONNECTION CLARIFICATION	10/28/09	
1	95% DESIGN FINAL - ISSUED FOR CONSTRUCTION	10/12/09	

Revisions

DEPARTMENT OF THE ARMY
PROGRAM MANAGER FOR
CHEMICAL DEMILITARIZATION
ABERDEEN PROVING GROUND, MARYLAND

US ARMY ENGINEER DISTRICT SACRAMENTO
CORPS OF ENGINEERS
SACRAMENTO, CALIFORNIA

Continental Research and Engineering, LLC

EG&G A Division of URS

US Army Corps of Engineers

TOOELE ARMY DEPOT
TOOELE, UTAH

CHEMICAL STOCKPILE DISPOSAL PROGRAM
AREA 10
AREA 10 LIQUID INCINERATOR (ATLIC)
LIC PRIMARY P&ID

UNLESS OTHERWISE SPECIFIED
DIMENSIONS ARE IN INCHES
BREAK SHARP EDGES - .005/.015
DECIMAL TOLERANCE AFTER FINISH
X = ±.1
.XX = ±.06
XXX = ±.015
ANGLES = ±0° - 30

Drawn by CR&E-MV	Date 01/19/09	Scale NO SCALE	Sheet reference number. EG-22-D-8210
Checked by	EG&G Approved.		EG&C Contract No. DACA87-89-C-0076
Engineer	PMCD Mgr Concur N/A		Sheet 1 of 2 / Rev. 3

2 UNCONTROLLED COPY - UNLESS STAMPED OTHERWISE BY DCC 1

UNCONTROLLED COPY - UNLESS STAMPED OTHERWISE BY DCC

LIC-FURN-8102
LIC SECONDARY CHAMBER

REFERENCE DRAWINGS:

EG 22-G-8205
EG-22-F-8201
EG 22-P-8250

NOTES:

1. FSSS DENOTES INPUT/OUTPUT TO FLAME SAFETY SHUTDOWN SYSTEM
2. FSSS DENOTES STATUS COMMUNICATION TO THE FACILITY CONTROL SYSTEM THROUGH THE FLAME SAFETY SHUTDOWN SYSTEM
3. ALL ANALOG INSTRUMENT VALUES WILL BE COLLECTED BY THE FACILITY CONTROL SYSTEM AND RECORDED AT A MINIMUM FREQUENCY OF ONCE PER MINUTE.
4. SEE LIC ALARM AND INTERLOCK MATRIX "ATLIC A&I MATRIX.XLS" FOR ALARM FUNCTIONS AND SET POINTS
5. 829-FV-8521 CONTROLS FLOW TO INJECTION NOZZLES WHEN FEEDING WATER 829-FV-8521 IS FULL OPEN WHEN FEEDING SDS. SDS FLOW IS CONTROLLED BY FEED PUMP VFD.
6. ADDITIONAL FURNACE ALARMS ARE GENERATED THROUGH THE BURNER MANAGEMENT SYSTEM.
7. ALL EQUIPMENT GOVERNMENT FURNISHED (GFE) UNLESS OTHERWISE NOTED
8. LOCATION OF LIQUID LINE DRAIN AND VENT VALVES APPROXIMATE. FINAL QUANTITY AND LOCATIONS TO BE DETERMINED DURING EQUIPMENT INSTALLATION
9. FLANGED CONNECTIONS SUPPLIED ON PRE-FABRICATED SKID FOR SDS LINE CONNECTIONS
10. ALL PIPING TO CONFORM TO PIPE SPECIFICATION FOR CLASS SERVICES AS NOTED SEE DRAWING EG-22-P-8250 FOR PIPE CLASS SPECIFICATIONS.

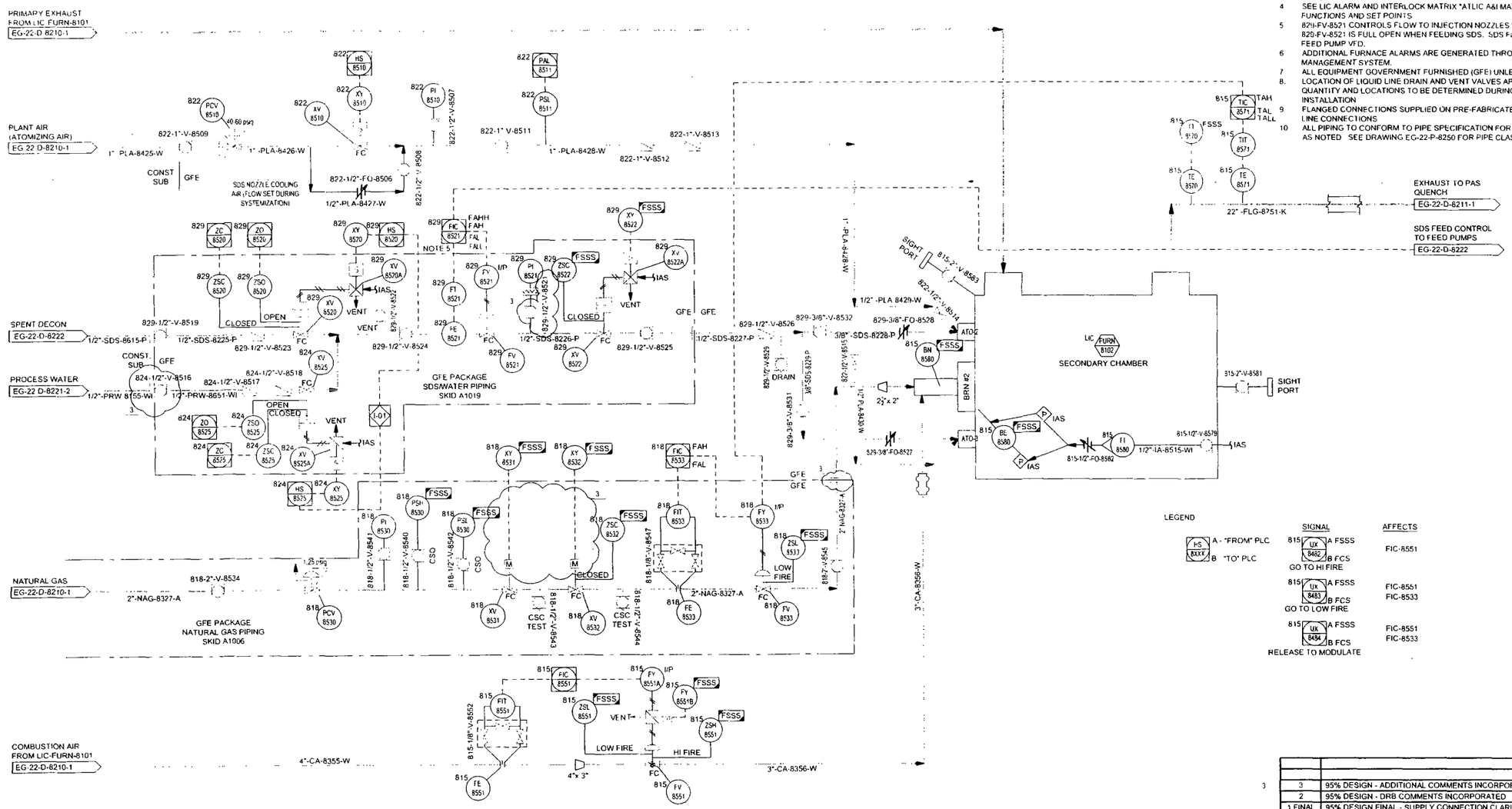

Symbol	Description	Date	Approved
3	95% DESIGN - ADDITIONAL COMMENTS INCORPORATED	11/17/09	
2	95% DESIGN - DRB COMMENTS INCORPORATED	11/03/09	
1 FINAL	95% DESIGN FINAL - SUPPLY CONNECTION CLARIFICATION	10/28/09	
1	95% DESIGN FINAL - ISSUED FOR CONSTRUCTION	10/12/09	

Revisions

Continental Research and Engineering, LLC

DEPARTMENT OF THE ARMY
PROGRAM MANAGER FOR
CHEMICAL DEMILITARIZATION
ABERDEEN PROVING GROUND, MARYLAND

US ARMY ENGINEER DISTRICT SACRAMENTO
CORPS OF ENGINEERS
SACRAMENTO, CALIFORNIA

EG&G A Division of URS

US Army Corps of Engineers

TOOELE ARMY DEPOT
TOOELE, UTAH

CHEMICAL STOCKPILE DISPOSAL PROGRAM
AREA 10
AREA 10 LIQUID INCINERATOR (ATLIC)
LIC SECONDARY P&ID

UNLESS OTHERWISE SPECIFIED
DIMENSIONS ARE IN INCHES
BREAK SHARP EDGES - .005/.015
DECIMAL TOLERANCE AFTER FINISH
X = ± .1
XX = ± .06
.XXX = ± .015
ANGLES = 90° - 30'

Drawn by: CR&E-MV	Date: 01/19/09		
Checked by	EG&G Approved	Scale	Sheet reference number
Engineer	PMCD Mgr Concur N/A	NO SCALE	EG-22-D-8210

EG&G Contract No. DACA87-89-C-0076
Sheet 2 of 2
Rev 3

UNCONTROLLED COPY - UNLESS STAMPED OTHERWISE BY DCC

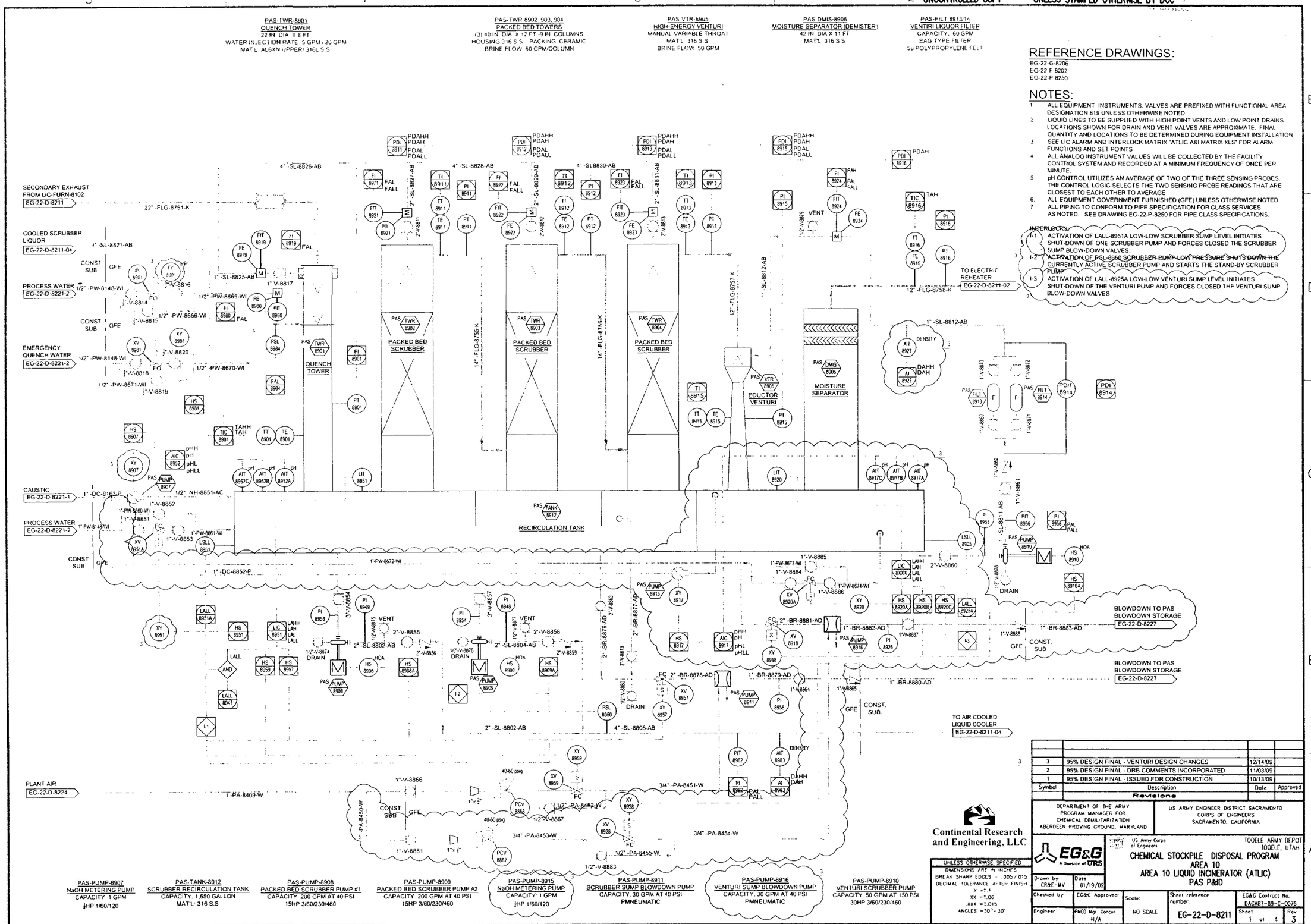

REFERENCE DRAWINGS:

EG-22-G-8206
EG-22-F-8202
EG-22-P-8250

NOTES:

1. ALL EQUIPMENT INSTRUMENTS, VALVES ARE PREFIXED WITH FUNCTIONAL AREA DESIGNATION 819 UNLESS OTHERWISE NOTED
2. LIQUID LINES TO BE SUPPLIED WITH HIGH POINT VENTS AND LOW POINT DRAINS LOCATIONS SHOWN FOR DRAIN AND VENT VALVES ARE APPROXIMATE. FINAL QUANTITY AND LOCATIONS TO BE DETERMINED DURING EQUIPMENT INSTALLATION
3. SEE LIC ALARM AND INTERLOCK MATRIX "ATLIC A&I MATRIX XLS" FOR ALARM FUNCTIONS AND SET POINTS
4. ALL ANALOG INSTRUMENT VALUES WILL BE COLLECTED BY THE FACILITY CONTROL SYSTEM AND RECORDED AT A MINIMUM FREQUENCY OF ONCE PER MINUTE.
5. pH CONTROL UTILIZES AN AVERAGE OF TWO OF THE THREE SENSING PROBES. THE CONTROL LOGIC SELECTS THE TWO SENSING PROBE READINGS THAT ARE CLOSEST TO EACH OTHER TO AVERAGE
6. ALL EQUIPMENT GOVERNMENT FURNISHED (GFE) UNLESS OTHERWISE NOTED.
7. ALL PIPING TO CONFORM TO PIPE SPECIFICATION FOR CLASS SERVICES AS NOTED. SEE DRAWING EG-22-P-8250 FOR PIPE CLASS SPECIFICATIONS.

INTERLOCKS:

I-1 ACTIVATION OF LALL-8951A LOW-LOW SCRUBBER SUMP LEVEL INITIATES SHUT-DOWN OF ONE SCRUBBER PUMP AND FORCES CLOSED THE SCRUBBER SUMP BLOW-DOWN VALVES.

I-2 ~~ACTIVATION OF PSL-8950 SCRUBBER PUMP LOW PRESSURE SHUTS DOWN THE CURRENTLY ACTIVE SCRUBBER PUMP AND STARTS THE STAND-BY SCRUBBER PUMP~~

I-3 ACTIVATION OF LALL-8925A LOW-LOW VENTURI SUMP LEVEL INITIATES SHUT-DOWN OF THE VENTURI PUMP AND FORCES CLOSED THE VENTURI SUMP BLOW-DOWN VALVES

PAS-PUMP-8907
NaOH METERING PUMP
CAPACITY: 1 GPM
HP 1/60/120

PAS-TANK-8912
SCRUBBER RECIRCULATION TANK
CAPACITY: 1,650 GALLON
MAT'L: 316 S.S

PAS-PUMP-8908
PACKED BED SCRUBBER PUMP #1
CAPACITY: 200 GPM AT 40 PSI
15HP 3/60/230/460

PAS-PUMP-8909
PACKED BED SCRUBBER PUMP #2
CAPACITY: 200 GPM AT 40 PSI
15HP 3/60/230/460

PAS-PUMP-8915
NaOH METERING PUMP
CAPACITY: 1 GPM
HP 1/60/120

PAS-PUMP-8911
SCRUBBER SUMP BLOWDOWN PUMP
CAPACITY: 30 GPM AT 40 PSI
PNEUMATIC

PAS-PUMP-8916
VENTURI SUMP BLOWDOWN PUMP
CAPACITY: 30 GPM AT 40 PSI
PNEUMATIC

PAS-PUMP-8910
VENTURI SCRUBBER PUMP
CAPACITY: 50 GPM AT 150 PSI
30HP 3/60/230/460

Symbol	Description	Date	Approved
3	95% DESIGN FINAL - VENTURI DESIGN CHANGES	12/14/09	
2	95% DESIGN FINAL - DRB COMMENTS INCORPORATED	11/03/09	
1	95% DESIGN FINAL - ISSUED FOR CONSTRUCTION	10/13/09	

Revisions

DEPARTMENT OF THE ARMY
PROGRAM MANAGER FOR
CHEMICAL DEMILITARIZATION
ABERDEEN PROVING GROUND, MARYLAND

US ARMY ENGINEER DISTRICT SACRAMENTO
CORPS OF ENGINEERS
SACRAMENTO, CALIFORNIA

Continental Research and Engineering, LLC

UNLESS OTHERWISE SPECIFIED
DIMENSIONS ARE IN INCHES
BREAK SHARP EDGES - .005/.015
DECIMAL TOLERANCE AFTER FINISH
X = ±.1
XX = ±.06
.XXX = ±.015
ANGLES = ±0° - 30'

EG&G A Division of URS

US Army Corps of Engineers

TOOELE ARMY DEPOT
TOOELE, UTAH

CHEMICAL STOCKPILE DISPOSAL PROGRAM
AREA 10
AREA 10 LIQUID INCINERATOR (ATLIC)
PAS P&ID

Drawn by	Date	Scale	Sheet reference number	EG&G Contract No.
CR&E - MV	01/19/09	NO SCALE	EG-22-D-8211	DACA87-89-C-0076
Checked by	EG&G Approved			Sheet 1 of 4
Engineer	PMCD Mgr Concur N/A			Rev 3

PAS-BLOW-8925
CARBON TRANSPORT BLOWER
CAPACITY: 20 SCFM AT 29" W.C.
0.33HP 3/60/230/460

PAS-BBU-8921
CARBON BULK BAG UNLOADER
CAPACITY: 900 LB BULK BAG
LOADING HOIST 2,000 lb CAPACITY

PAS-GATE-8920
CARBON FEED ISOLATION GATE

PAS-LIFT-8929
CARBON LOADING HOIST

PAS-RAL-8922
CARBON ROTARY FEEDER

PAS-FEED-8923
CARBON WEIGH FEEDER
CAPACITY: 0.5 TO 5 LBM/HR

PAS-FILT-8927
BAGHOUSE
SINGLE MODULE
HIGH-PRESSURE PULSE-JET CLEANING
OPERATING TEMP. 180°F
MAX. OPERATING PRESS. -60" w.c.
36 FILTER BAGS
424 sq. ft. FILTER AREA
GORE®MEMBRANE ON FIBERGLASS
316L S.S.

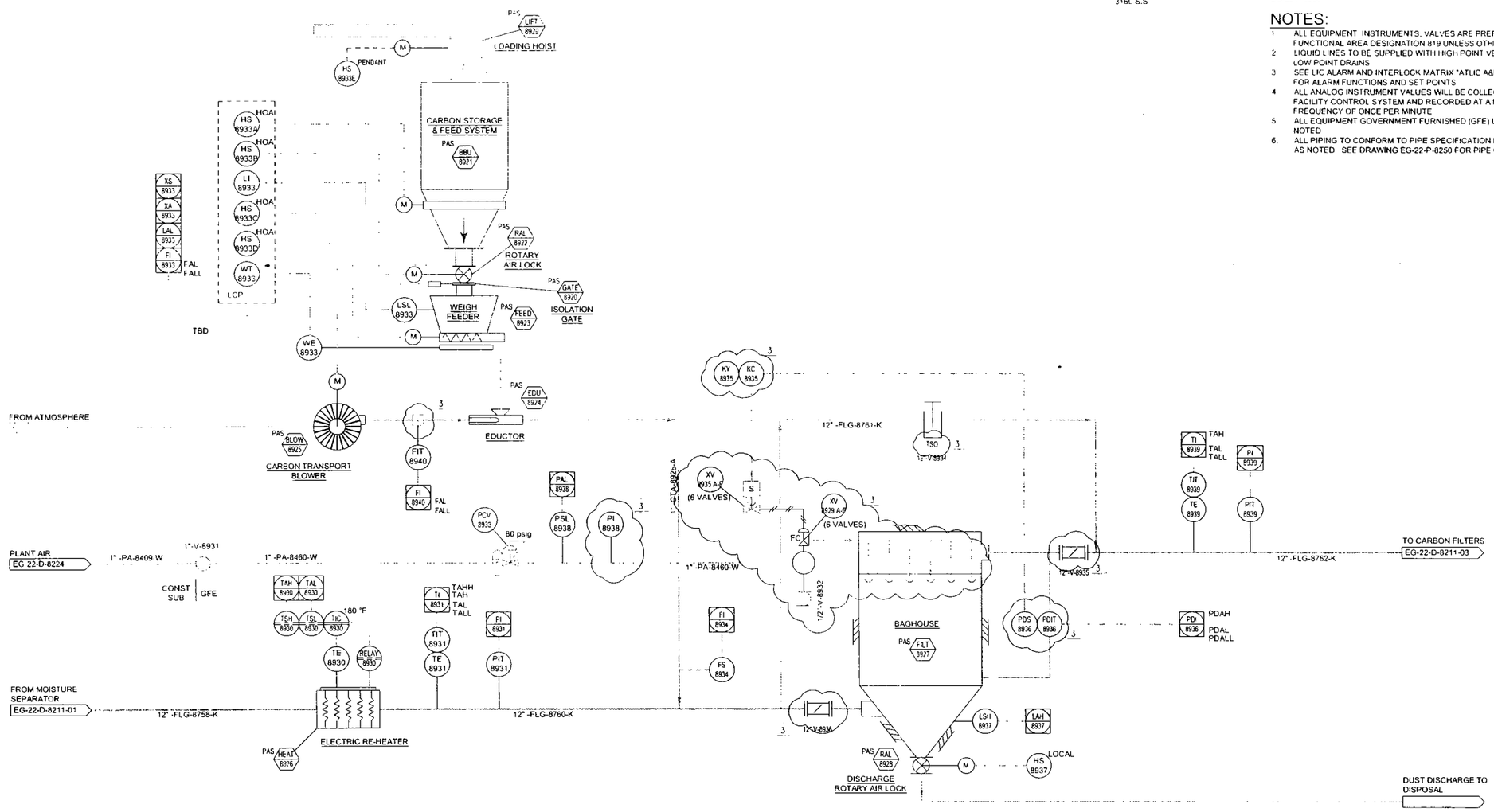

REFERENCE DRAWINGS:

EG-22-G-8206
EG-22-F-8202
EG-22-P-8250

NOTES:

1. ALL EQUIPMENT, INSTRUMENTS, VALVES ARE PREFIXED WITH FUNCTIONAL AREA DESIGNATION 819 UNLESS OTHERWISE NOTED
2. LIQUID LINES TO BE SUPPLIED WITH HIGH POINT VENTS AND LOW POINT DRAINS
3. SEE LIC ALARM AND INTERLOCK MATRIX "ATLIC A&I MATRIX.XLS" FOR ALARM FUNCTIONS AND SET POINTS
4. ALL ANALOG INSTRUMENT VALUES WILL BE COLLECTED BY THE FACILITY CONTROL SYSTEM AND RECORDED AT A MINIMUM FREQUENCY OF ONCE PER MINUTE
5. ALL EQUIPMENT GOVERNMENT FURNISHED (GFE) UNLESS OTHERWISE NOTED
6. ALL PIPING TO CONFORM TO PIPE SPECIFICATION FOR CLASS SERVICES AS NOTED. SEE DRAWING EG-22-P-8250 FOR PIPE CLASS SPECIFICATIONS

PAS-HEAT-8926
ELECTRIC REHEATER
100 KW 3/60/230/460

PAS-RAL-8928
FILTER DISCHARGE ROTARY AIR LOCK
CAPACITY: 6 CU FT/MIN AT 18 RPM
0.75 HP 3/60/230/460

Symbol	Description	Date	Approved
3	VENDOR INFORMATION INCORPORATED	12/14/09	
2	95% DESIGN FINAL - DRB COMMENTS INCORPORATED	11/03/09	
1	95% DESIGN FINAL - ISSUED FOR CONSTRUCTION	10/13/09	

Revisions

DEPARTMENT OF THE ARMY
PROGRAM MANAGER FOR
CHEMICAL DEMILITARIZATION
ABERDEEN PROVING GROUND, MARYLAND

US ARMY ENGINEER DISTRICT SACRAMENTO
CORPS OF ENGINEERS
SACRAMENTO, CALIFORNIA

Continental Research and Engineering, LLC

EG&G A Division of URS

US Army Corps of Engineers

TOOELE ARMY DEPOT
TOOELE, UTAH

CHEMICAL STOCKPILE DISPOSAL PROGRAM
AREA 10
AREA 10 LIQUID INCINERATOR (ATLIC)
PAS P&ID

UNLESS OTHERWISE SPECIFIED
DIMENSIONS ARE IN INCHES
BREAK SHARP EDGES - .005/.015
DECIMAL TOLERANCE AFTER FINISH
X = ± .1
.XX = ± .06
XXX = ± .015
ANGLES = ±0° - 30'

Drawn by	Date	Checked by	EG&G Approved	Scale	Sheet reference number	EG&G Contract No.
CR&E - MV	01/19/09	Engineer	PMCD Mgr Concur N/A	NO SCALE	EG-22-D-8211	DACA87-89-C-0076

Sheet 2 of 4 Rev 3

PAS-FILT-8942
CARBON FILTER UNIT #2
DIAMETER: 72 IN
BED DEPTH 12 IN
PREFILTER HEPA
AFTERFILTER: HEPA

PAS-STAK-8944
DISCHARGE STACK
DIAMETER 14 IN
HEIGHT 40 FT
MATL FRP

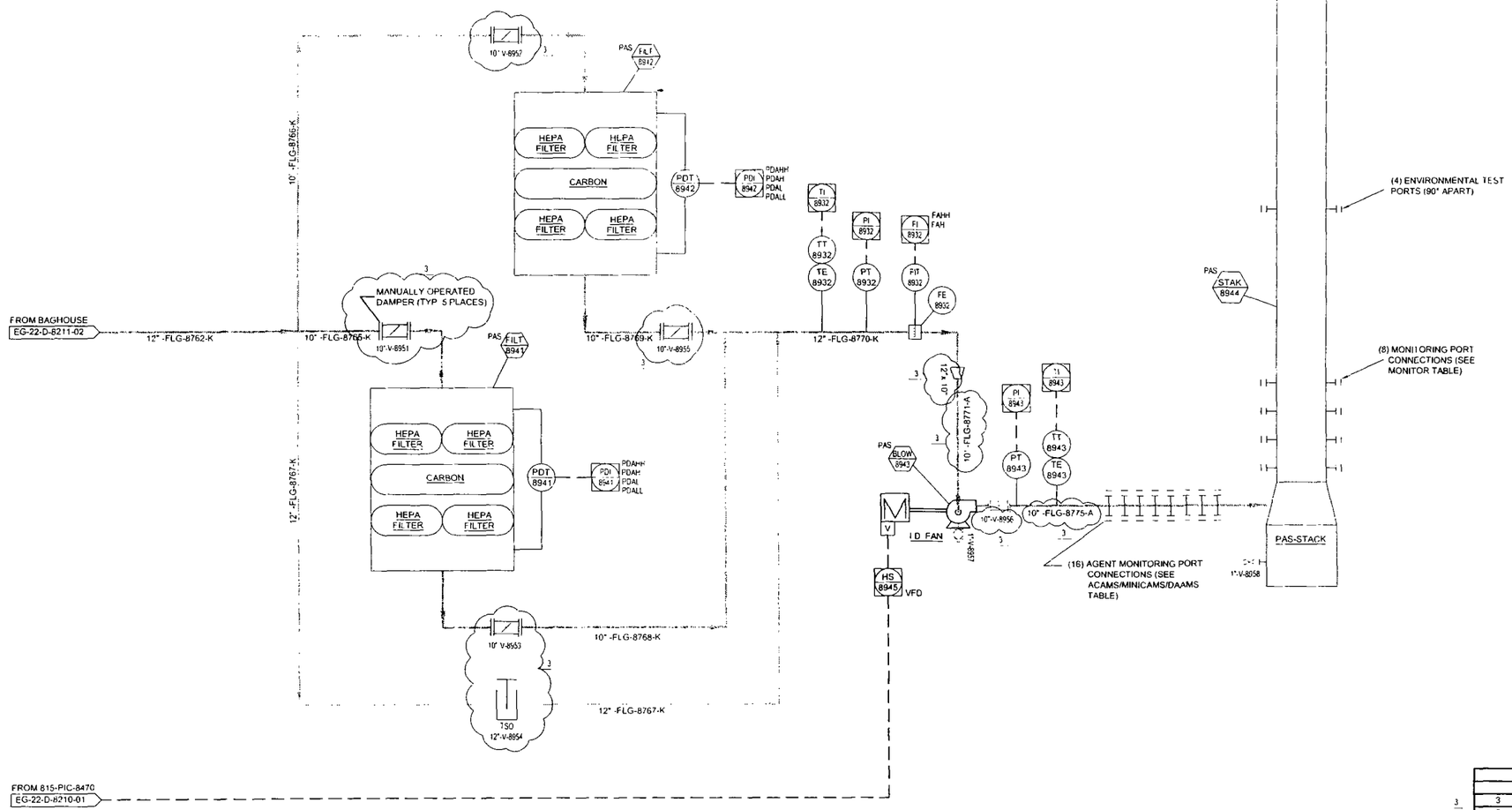

REFERENCE DRAWINGS:

EG-22-C-8206
EG-22-F-8202
EG-22-P-8250

NOTES:

1. ALL EQUIPMENT, INSTRUMENTS, VALVES ARE PREFIXED WITH FUNCTIONAL AREA DESIGNATION 819 UNLESS OTHERWISE NOTED
2. LIQUID LINES TO BE SUPPLIED WITH HIGH POINT VENTS AND LOW POINT DRAINS.
3. SEE LIC ALARM AND INTERLOCK MATRIX "ATLIC A&I MATRIX XLS" FOR ALARM FUNCTIONS AND SET POINTS
3. ALL ANALOG INSTRUMENT VALUES WILL BE COLLECTED BY THE FACILITY CONTROL SYSTEM AND RECORDED AT A MINIMUM FREQUENCY OF ONCE PER MINUTE
4. ALL EQUIPMENT GOVERNMENT FURNISHED (GFE) UNLESS OTHERWISE NOTED
5. ALL PIPING TO CONFORM TO PIPE SPECIFICATION FOR CLASS SERVICES AS NOTED SEE DRAWING EG-22-P-8250 FOR PIPE CLASS SPECIFICATIONS

MONITORS

INST. NO	DESCRIPTION	ALARMS
ICS-RACK-123 819-AI-8301	O_2	LO LO-LO
ICS-RACK-123 819-AI-8302	CO	HI HI-HI
ICS-RACK-124 819-AI-8304	NO_x	HI HI-HI

ACAMS/MINICAMS/DAAMS

INST NO.	DESCRIPTION	ALARMS
AE-142	MINICAMS	TBD
AE-143	MINICAMS	TBD
AE-144	MINICAMS	TBD
AE-145	MINICAMS	TBD
AE-146	MINICAMS	TBD
AE-147	MINICAMS	TBD
AE-543	ACAMS	TBD
AE-544	ACAMS	TBD
AE-545	ACAMS	TBD
AE-685	DAAMS	TBD
AE-686	DAAMS	TBD
AE-687	DAAMS	TBD
AE-688	DAAMS	TBD

PAS-FILT-8941
CARBON FILTER UNIT #1
DIAMETER 72 IN.
BED DEPTH: 12 IN
PREFILTER HEPA
AFTERFILTER HEPA

PAS-BLOW-8943
INDUCED DRAFT FAN
CAPACITY: 1700 CFM @ -55 IN W.C. 180 DEG. F
40 HP 480/3/60

Symbol	Description	Date	Approved
3	VENDOR INFORMATION INCORPORATED	12/14/09	
2	95% DESIGN FINAL - DRB COMMENTS INCORPORATED	11/03/09	
1	95% DESIGN FINAL - ISSUED FOR CONSTRUCTION	10/13/09	

Revisions

DEPARTMENT OF THE ARMY
PROGRAM MANAGER FOR
CHEMICAL DEMILITARIZATION
ABERDEEN PROVING GROUND, MARYLAND

US ARMY ENGINEER DISTRICT SACRAMENTO
CORPS OF ENGINEERS
SACRAMENTO, CALIFORNIA

Continental Research and Engineering, LLC

EG&G A Division of URS

US Army Corps of Engineers

TOOELE ARMY DEPOT
TOOELE, UTAH

CHEMICAL STOCKPILE DISPOSAL PROGRAM
AREA 10
AREA 10 LIQUID INCINERATOR (ATLIC)
PAS P&ID

UNLESS OTHERWISE SPECIFIED
DIMENSIONS ARE IN INCHES
BREAK SHARP EDGES - .005/.015
DECIMAL TOLERANCE AFTER FINISH
X = ±.1
.XX = ±.06
.XXX = ±.015
ANGLES = ±0° -30'

Drawn by: CR&E -MV	Date: 01/19/09		
Checked by:	EG&G Approved:	Scale: NO SCALE	Sheet reference number: EG-22-D-8211
Engineer	PMCD Mgr Concur N/A		

EG&G Contract No. DACA87-89-C-0076
Sheet 3 of 4
Rev. 3

PAS-FILT-8970
SCRUBBER LIQUOR FILTER
CAPACITY 200 GPM
BAG TYPE FILTER
5μ POLYPROPYLENE FELT

PAS-HX-8972
AIR COOLED LIQUID COOLER
CAPACITY 200 GPM
COOLING AIR FLOW 48,000 SCFM
(3) COOLING AIR FANS 42" DIA
7.5HP 230/460/60/3

PAS-HX-8974
SCRUBBER LIQUOR HEAT EXCHANGER
CAPACITY, TBD

PAS-TANK-8973
EXPANSION TANK
CAPACITY TBD

REFERENCE DRAWINGS

EG-22-G-8206
EG-22-F-8202
EG-22-P-8250

NOTES

1. ALL EQUIPMENT INSTRUMENTS VALVES ARE PREFIXED WITH FUNCTIONAL AREA DESIGNATION 819 UNLESS OTHERWISE NOTED.
2. LIQUID LINES TO BE SUPPLIED WITH HIGH POINT VENTS AND LOW POINT DRAINS
3. SEE LIC ALARM AND INTERLOCK MATRIX "ATLIC A&I MATRIX XLS" FOR ALARM FUNCTIONS AND SET POINTS.
4. ALL ANALOG INSTRUMENT VALUES WILL BE COLLECTED BY THE FACILITY CONTROL SYSTEM AND RECORDED AT A MINIMUM FREQUENCY OF ONCE PER MINUTE
5. ALL EQUIPMENT GOVERNMENT FURNISHED (GFE) UNLESS OTHERWISE NOTED.
6. LOCATION OF LIQUID LINE DRAIN AND VENT VALVES APPROXIMATE FINAL QUANTITY AND LOCATIONS TO BE DETERMINED DURING EQUIPMENT INSTALLATION.
7. ALL PIPING TO CONFORM TO PIPE SPECIFICATION FOR CLASS SERVICES AS NOTED. SEE DRAWING EG-22-P-8250 FOR PIPE CLASS SPECIFICATIONS

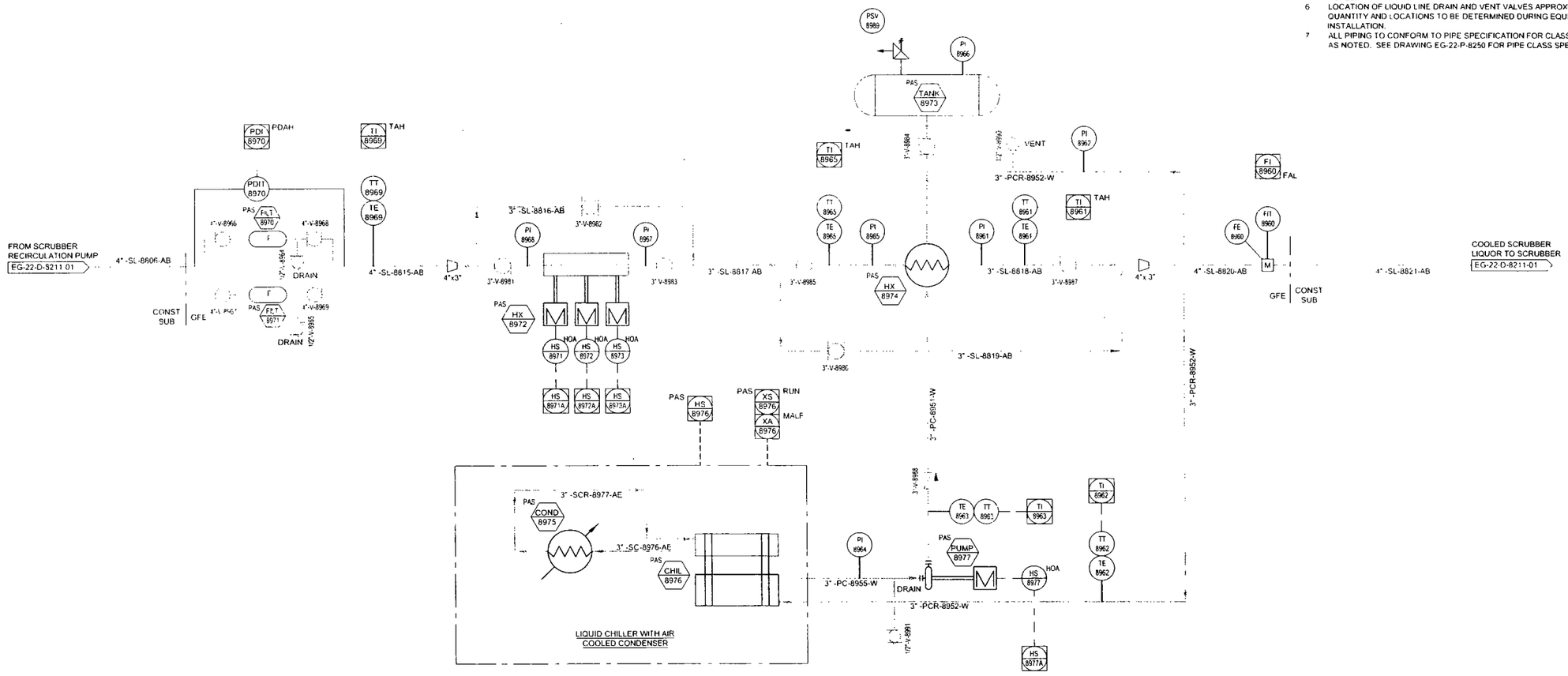

PAS-FILT-8971
SCRUBBER LIQUOR FILTER
CAPACITY 200 GPM
BAG TYPE FILTER
5μ POLYPROPYLENE FELT

PAS-COND-8975
AIR COOLED CONDENSER
CAPACITY TBD GPM
COOLING AIR FLOW: TBD SCFM
(TBD) COOLING AIR FANS TBD" DIA
TBD HP 230/460/60/3

PAS-CHIL-8976
LIQUID CHILLER
CAPACITY: TBD
TBD HP 230/460/60/3

PAS-PUMP-8977
CHILLED LIQUID PUMP
CAPACITY TBD GPM
TBD HP 230/460/60/3

Symbol	Description	Date	Approved
3	VENDOR INFORMATION INCORPORATED	12/14/09	
2	95% DESIGN FINAL - DRB COMMENTS INCORPORATED	11/03/09	
1	95% DESIGN FINAL - ISSUED FOR CONSTRUCTION	10/13/09	

Revisions

DEPARTMENT OF THE ARMY
PROGRAM MANAGER FOR
CHEMICAL DEMILITARIZATION
ABERDEEN PROVING GROUND, MARYLAND

US ARMY ENGINEER DISTRICT SACRAMENTO
CORPS OF ENGINEERS
SACRAMENTO, CALIFORNIA

Continental Research and Engineering, LLC

EG&G A Division of URS

US Army Corps of Engineers

TOOELE ARMY DEPOT
TOOELE, UTAH

CHEMICAL STOCKPILE DISPOSAL PROGRAM
AREA 10
AREA 10 LIQUID INCINERATOR (ATLIC)
PAS P&ID

UNLESS OTHERWISE SPECIFIED
DIMENSIONS ARE IN INCHES.
BREAK SHARP EDGES - .005/.015
DECIMAL TOLERANCE AFTER FINISH
X =±.1
XX =±.06
XXX =±.015
ANGLES =±0°-30'

Drawn by CR&E-MV	Date 01/19/09		
Checked by	EG&G Approved	Scale NO SCALE	Sheet reference number EG-22-D-8211
Engineer	PMCD Mgr Concur N/A		

EG&G Contract No. DACA87-89-C-0076
Sheet 4 of 4
Rev. 3

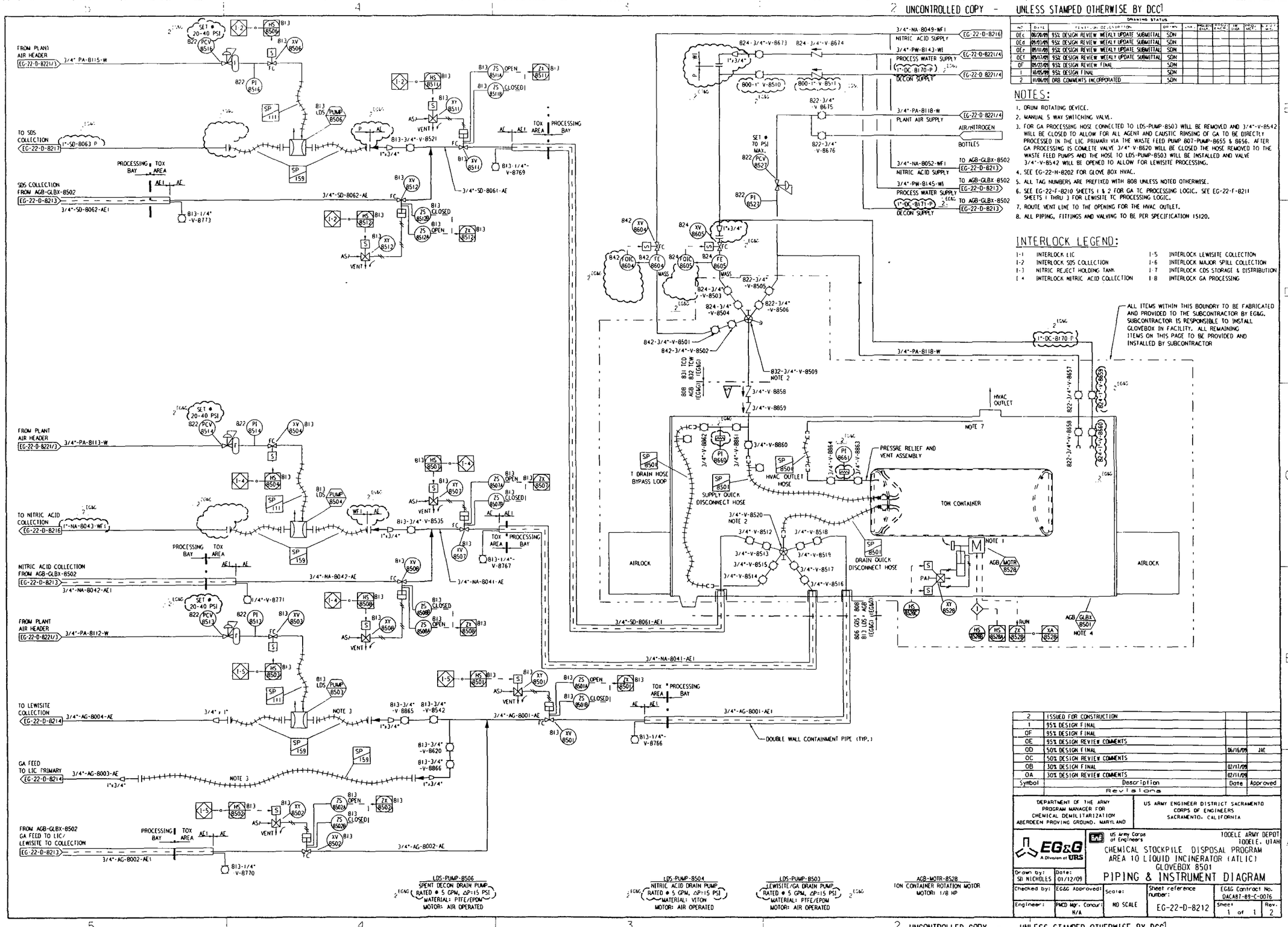

DRAWING STATUS									
NO	DATE	DESCRIPTION	DRAWN	CHK	PROJ ENG	PROJ ENG	HP CHP	PROJ MGR	A/E PM
OEc	08/20/09	95% DESIGN REVIEW WEEKLY UPDATE SUBMITTAL	SDN						
OEd	09/03/09	95% DESIGN REVIEW WEEKLY UPDATE SUBMITTAL	SDN						
OEe	09/10/09	95% DESIGN REVIEW WEEKLY UPDATE SUBMITTAL	SDN						
OEf	09/17/09	95% DESIGN REVIEW WEEKLY UPDATE SUBMITTAL	SDN						
OF	09/22/09	95% DESIGN REVIEW FINAL	SDN						
1	10/05/09	95% DESIGN FINAL	SDN						
2	11/06/09	DRB COMMENTS INCORPORATED	SDN						

NOTES:

1. DRUM ROTATING DEVICE.
2. MANUAL 5 WAY SWITCHING VALVE.
3. FOR GA PROCESSING HOSE CONNECTED TO LDS-PUMP-8503 WILL BE REMOVED AND 3/4"-V-8542 WILL BE CLOSED TO ALLOW FOR ALL AGENT AND CAUSTIC RINSING OF GA TO BE DIRECTLY PROCESSED IN THE LIC PRIMARY VIA THE WASTE FEED PUMP 807-PUMP-8655 & 8656. AFTER GA PROCESSING IS COMLETE VALVE 3/4" V-8620 WILL BE CLOSED THE HOSE REMOVED TO THE WASTE FEED PUMPS AND THE HOSE TO LDS-PUMP-8503 WILL BE INSTALLED AND VALVE 3/4"-V-8542 WILL BE OPENED TO ALLOW FOR LEWISITE PROCESSING.
4. SEE EG-22-H-8202 FOR GLOVE BOX HVAC.
5. ALL TAG NUMBERS ARE PREFIXED WITH 808 UNLESS NOTED OTHERWISE.
6. SEE EG-22-F-8210 SHEETS 1 & 2 FOR GA TC PROCESSING LOGIC. SEE EG-22-F-8211 SHEETS 1 THRU 3 FOR LEWISITE TC PROCESSING LOGIC.
7. ROUTE VENT LINE TO THE OPENING FOR THE HVAC OUTLET.
8. ALL PIPING, FITTINGS AND VALVING TO BE PER SPECIFICATION 15120.

INTERLOCK LEGEND:

I-1	INTERLOCK LIC	I-5	INTERLOCK LEWISITE COLLECTION
I-2	INTERLOCK SDS COLLECTION	I-6	INTERLOCK MAJOR SPILL COLLECTION
I-3	NITRIC REJECT HOLDING TANK	I-7	INTERLOCK CDS STORAGE & DISTRIBUTION
I-4	INTERLOCK NITRIC ACID COLLECTION	I-8	INTERLOCK GA PROCESSING

Symbol	Description	Date	Approved
2	ISSUED FOR CONSTRUCTION		
1	95% DESIGN FINAL		
OF	95% DESIGN FINAL		
OE	95% DESIGN REVIEW COMMENTS		
OD	50% DESIGN FINAL	06/16/09	JAE
OC	50% DESIGN REVIEW COMMENTS		
OB	30% DESIGN FINAL	02/17/09	
OA	30% DESIGN REVIEW COMMENTS	02/11/09	

Revisions

DEPARTMENT OF THE ARMY
PROGRAM MANAGER FOR
CHEMICAL DEMILITARIZATION
ABERDEEN PROVING GROUND, MARYLAND

US ARMY ENGINEER DISTRICT SACRAMENTO
CORPS OF ENGINEERS
SACRAMENTO, CALIFORNIA

EG&G A Division of URS

US Army Corps of Engineers

TOOELE ARMY DEPOT
TOOELE, UTAH

CHEMICAL STOCKPILE DISPOSAL PROGRAM
AREA 10 LIQUID INCINERATOR (ATLIC)
GLOVEBOX 8501

PIPING & INSTRUMENT DIAGRAM

Drawn by: SD NICHOLES	Date: 01/12/09			
Checked by:	EG&G Approved:	Scale: NO SCALE	Sheet reference number: EG-22-D-8212	EG&G Contract No. DAAA87-89-C-0016
Engineer:	PMCD Mgr. Concur: N/A			Sheet 1 of 1 Rev. 2

2 UNCONTROLLED COPY - UNLESS STAMPED OTHERWISE BY DCC1

DRAWING STATUS

NO.	DATE	REVISION DESCRIPTION	DRAWN	CHK	PROJ MGR	PROJ ENGR	LEAD DISC	PROJ DIR	PROJ CTL MGR
OEb	08/20/09	95% DESIGN REVIEW WEEKLY UPDATE SUBMITTAL	SDN						
OEc	09/03/09	95% DESIGN REVIEW WEEKLY UPDATE SUBMITTAL	SDN						
OEd	09/11/09	95% DESIGN REVIEW WEEKLY UPDATE SUBMITTAL	SDN						
OEe	09/17/09	95% DESIGN REVIEW WEEKLY UPDATE SUBMITTAL	SDN						
OF	09/22/09	95% DESIGN FINAL	SDN						
1	10/05/09	95% DESIGN FINAL	SDN						
2	11/06/09	DRB COMMENTS INCORPORATED	SDN						

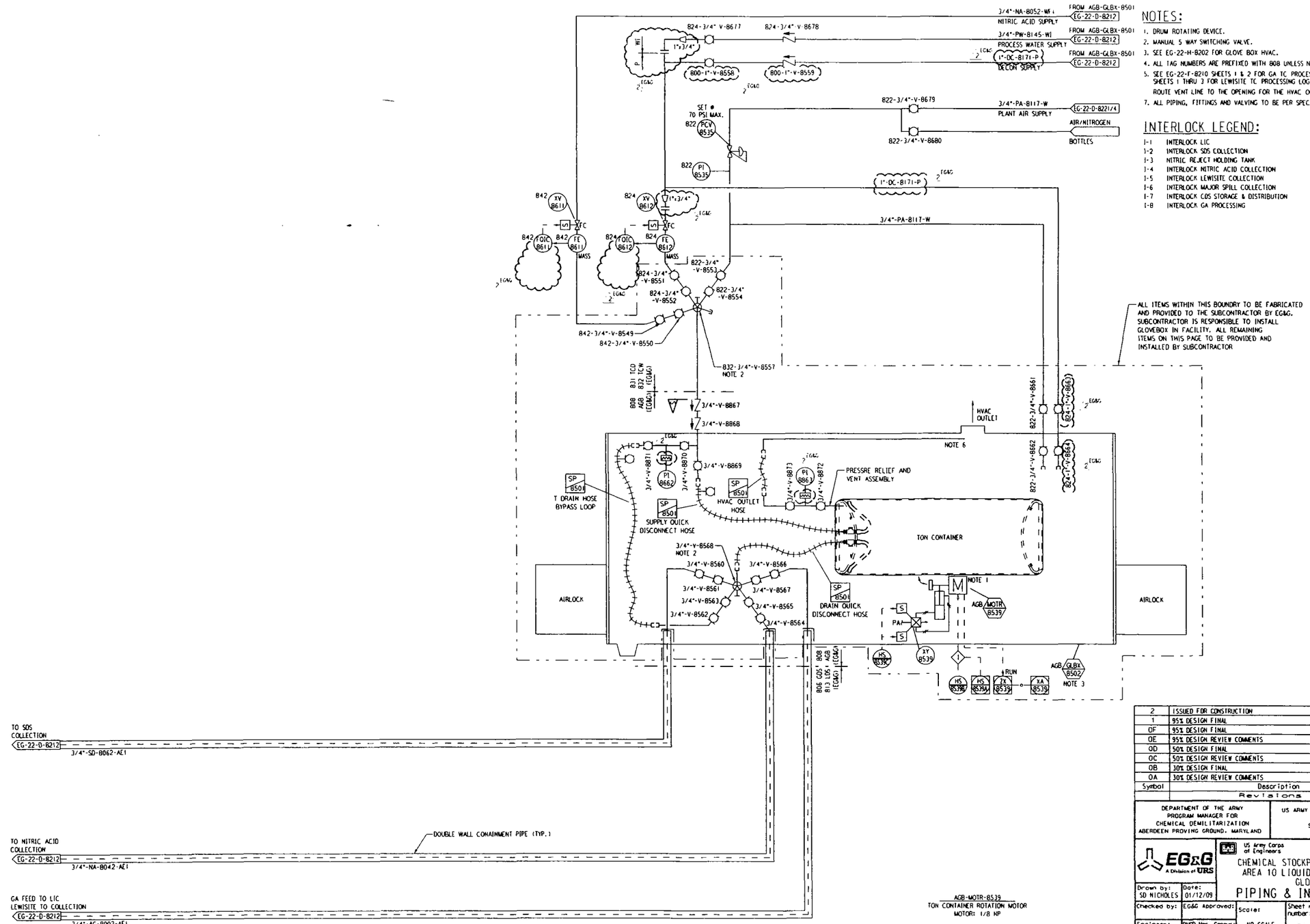

NOTES:

1. DRUM ROTATING DEVICE.
2. MANUAL 5 WAY SWITCHING VALVE.
3. SEE EG-22-H-8202 FOR GLOVE BOX HVAC.
4. ALL TAG NUMBERS ARE PREFIXED WITH 808 UNLESS NOTED OTHERWISE.
5. SEE EG-22-F-8210 SHEETS 1 & 2 FOR GA TC PROCESSING LOGIC. SEE EG-22-F-8211 SHEETS 1 THRU 3 FOR LEWISITE TC PROCESSING LOGIC.
   ROUTE VENT LINE TO THE OPENING FOR THE HVAC OUTLET.
7. ALL PIPING, FITTINGS AND VALVING TO BE PER SPECIFICATION 15120.

INTERLOCK LEGEND:

I-1	INTERLOCK LIC
I-2	INTERLOCK SDS COLLECTION
I-3	NITRIC REJECT HOLDING TANK
I-4	INTERLOCK NITRIC ACID COLLECTION
I-5	INTERLOCK LEWISITE COLLECTION
I-6	INTERLOCK MAJOR SPILL COLLECTION
I-7	INTERLOCK CDS STORAGE & DISTRIBUTION
I-8	INTERLOCK GA PROCESSING

Symbol	Description	Date	Approved
2	ISSUED FOR CONSTRUCTION		
1	95% DESIGN FINAL		
OF	95% DESIGN FINAL		
OE	95% DESIGN REVIEW COMMENTS		
OD	50% DESIGN FINAL		
OC	50% DESIGN REVIEW COMMENTS		
OB	30% DESIGN FINAL	02/11/09	
OA	30% DESIGN REVIEW COMMENTS	02/11/09	

Revisions

DEPARTMENT OF THE ARMY
PROGRAM MANAGER FOR
CHEMICAL DEMILITARIZATION
ABERDEEN PROVING GROUND, MARYLAND

US ARMY ENGINEER DISTRICT SACRAMENTO
CORPS OF ENGINEERS
SACRAMENTO, CALIFORNIA

EG&G A Division of URS

US Army Corps of Engineers

TOOELE ARMY DEPOT
TOOELE, UTAH

CHEMICAL STOCKPILE DISPOSAL PROGRAM
AREA 10 LIQUID INCINERATOR (ATLIC)
GLOVEBOX 8502

PIPING & INSTRUMENT DIAGRAM

Drawn by:	Date:	Checked by:	EG&G Approved:	Scale:	Sheet reference number:	EG&G Contract No.
SD NICHOLES	01/12/09	Engineer:	PMCD Mgr. Concur: N/A	NO SCALE	EG-22-D-8213	DACA87-89-C-0076

Sheet 1 of 1 — Rev. 2

2 UNCONTROLLED COPY - UNLESS STAMPED OTHERWISE BY DCC1

UNCONTROLLED COPY - UNLESS STAMPED OTHERWISE BY DCC[1]

LDS-FILT-8507
LEWISITE DUPLEX STRAINER
MATERIAL: CARBON STEEL

LCS-TANK-8511
LEWISITE AGENT HOLDING TANK
SIZE: 5' 4" Ø x 7' 0" T-T
WORKING CAPACITY: 1000 GALLONS
MATERIAL: CARBON STEEL

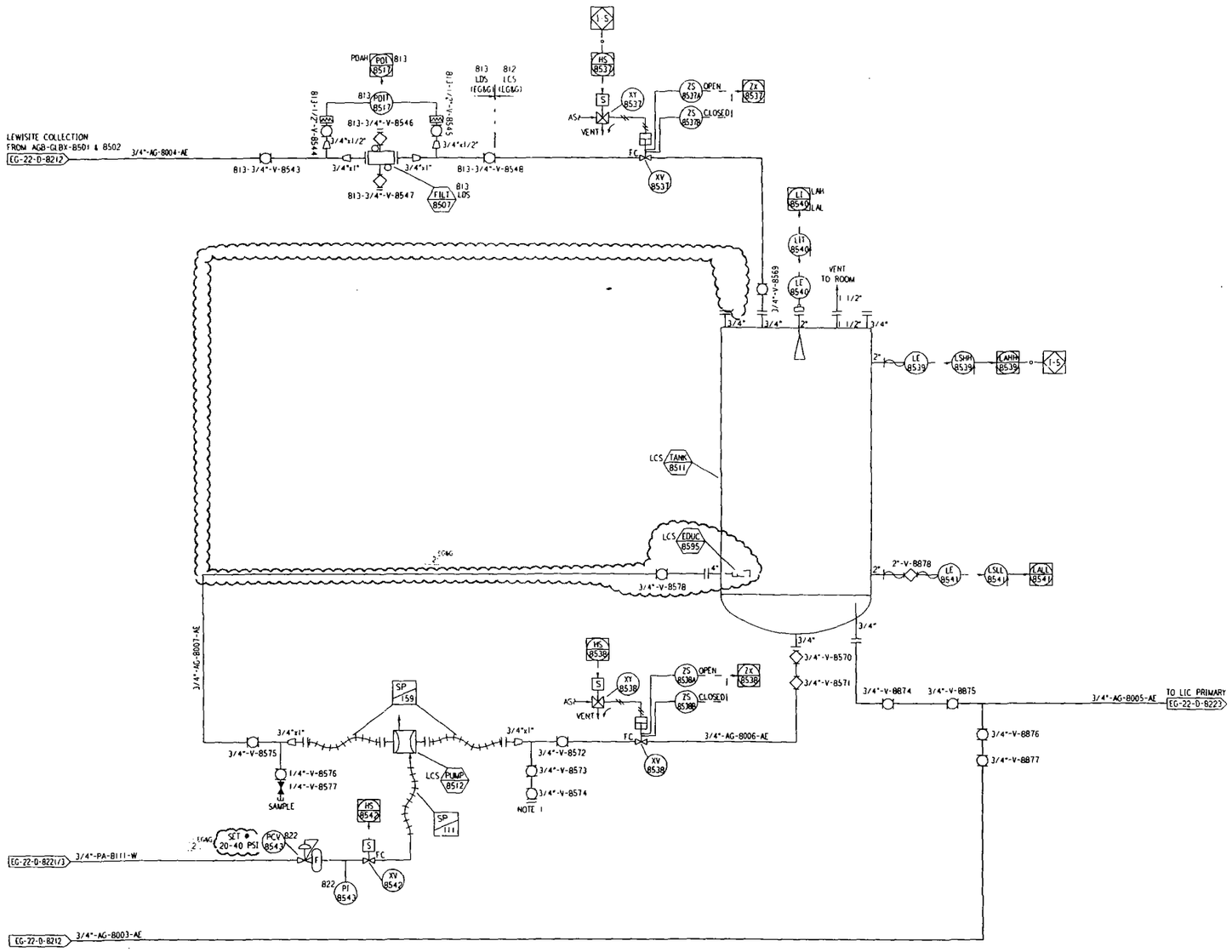

LCS-PUMP-8512
LCS-TANK-8511 RECIRCULATION PUMP
(RATED @15 GPM, ΔP=20PSI)
MATERIAL: PTFE/EPDM
MOTOR: AIR OPERATED

DRAWING STATUS									
REV.	DATE	REVISION DESCRIPTION	DRAWN.	CHK.	PROJ. ENGR.	PROJ. ENGR.	QA. ENG.	PROJ. MGR.	P.D. MGR.
OCe	05/15/09	50% DESIGN REVIEW COMMENT SUBMITTAL	SDN						
OD	06/01/09	50% DESIGN FINAL	SDN						
OEa	06/13/09	95% DESIGN REVIEW COMMENT SUBMITTAL	SDN						
OEb	09/17/09	95% DESIGN REVIEW COMMENT SUBMITTAL	SDN						
OF	09/22/09	95% DESIGN FINAL	SDN						
1	10/05/09	95% DESIGN FINAL	SDN						
2	11/06/09	DRB COMMENTS INCORPORATED	SDN						

NOTES:

1. THIS CONNECTION TO BE USED IN THE EVENT THAT A MAJOR SPILL OCCURS AND THAT THE CONTENTS OF THE MAJOR SPILL TANK NEEDS TO BE EMPTIED INTO THE LEWISITE COLLECTION TANK FOR PROCESSING.
2. ALL TAG NUMBERS ARE PREFIXED WITH B12 UNLESS OTHERWISE NOTED.
3. ALL PIPING, FITTINGS AND VALVING TO BE PER SPECIFICATION 15120.
4. TANK TO BE PROVIDED BY EG&G. SUBCONTRACTOR TO PAINT EXTERIOR OF TANK WITH EPOLOID PER SPECIFICATION 09900. SUBCONTRACTOR IS RESPONSIBLE FOR INSTALLATION OF TANK. ALL OTHER ITEMS ON THIS PAGE TO BE PROVIDED AND INSTALLED BY SUBCONTRACTOR

INTERLOCK LEGEND:

I-1 INTERLOCK LIC
I-2 INTERLOCK SDS COLLECTION
I-3 NITRIC REJECT HOLDING TANK
I-4 INTERLOCK NITRIC ACID COLLECTION
I-5 INTERLOCK LEWISITE COLLECTION
I-6 INTERLOCK MAJOR SPILL COLLECTION
I-7 INTERLOCK CDS STORAGE & DISTRIBUTION
I-8 INTERLOCK GA PROCESSING

Symbol	Description	Date	Approved
2	ISSUED FOR CONSTRUCTION		
1	95% DESIGN FINAL		
OF	95% DESIGN FINAL		
OE	95% DESIGN REVIEW COMMENTS		
OD	50% DESIGN FINAL		
OC	50% DESIGN REVIEW COMMENTS		
OB	30% DESIGN FINAL	02/17/09	
OA	30% DESIGN REVIEW COMMENTS	02/02/09	

Revisions

DEPARTMENT OF THE ARMY
PROGRAM MANAGER FOR
CHEMICAL DEMILITARIZATION
ABERDEEN PROVING GROUND, MARYLAND

US ARMY ENGINEER DISTRICT SACRAMENTO
CORPS OF ENGINEERS
SACRAMENTO, CALIFORNIA

EG&G A Division of URS

US Army Corps of Engineers

TOOELE ARMY DEPOT
TOOELE, UTAH

CHEMICAL STOCKPILE DISPOSAL PROGRAM
AREA 10 LIQUID INCINERATOR (ALIC)
LEWISITE COLLECTION SYSTEM

PIPING & INSTRUMENT DIAGRAM

Drawn by:	Date:	Scale:	Sheet reference number:	EG&G Contract No.
SD NICHOLES	01/12/09	NO SCALE	EG-22-D-8214	DACA87-89-C-0076
Checked by:	EG&G Approved:			Sheet 1 of 1
Engineer:	PMCD Mgr. Concur: N/A			Rev. 2

UNCONTROLLED COPY - UNLESS STAMPED OTHERWISE BY DCC[1]

2 UNCONTROLLED COPY - UNLESS STAMPED OTHERWISE BY DCC

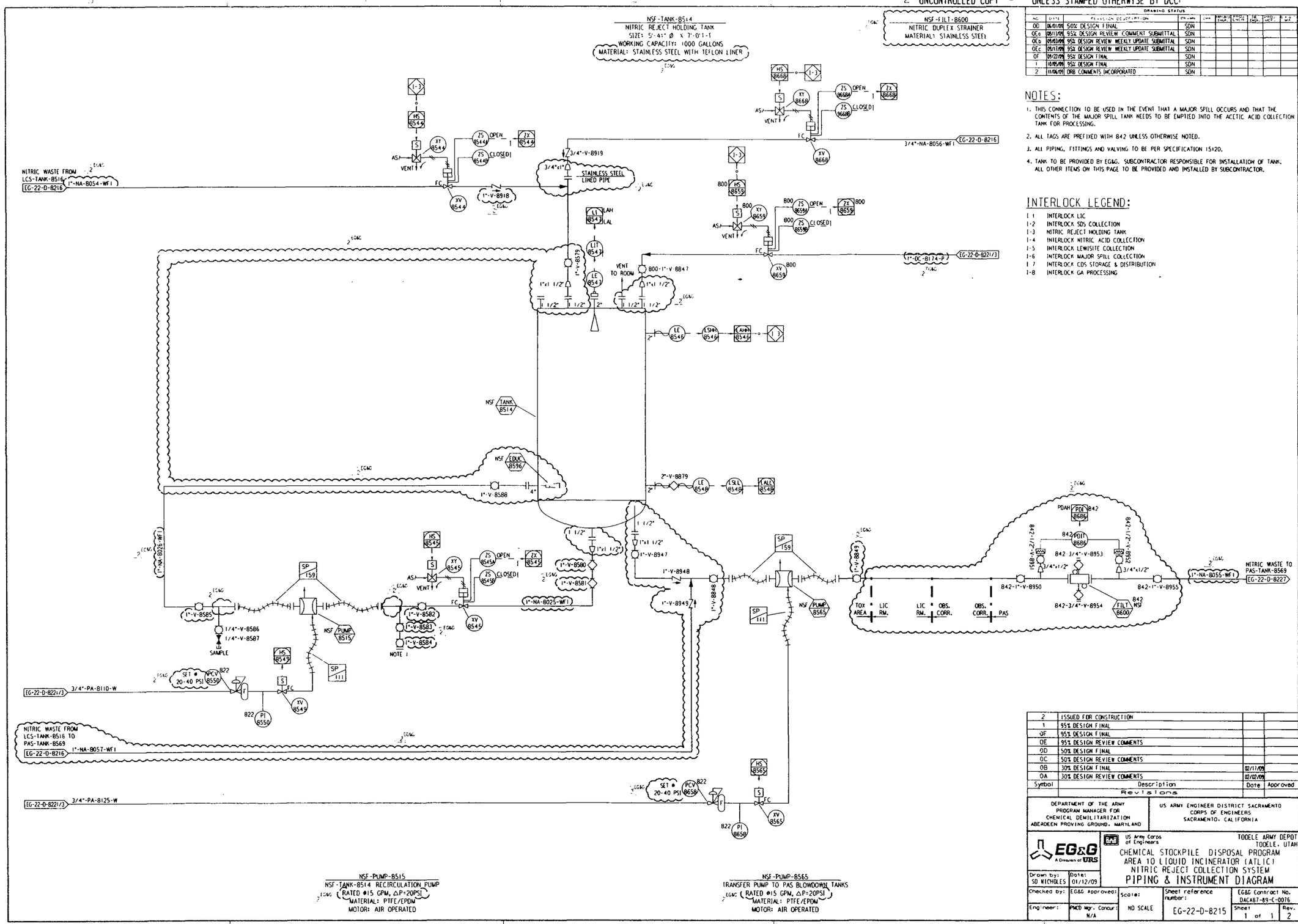

NSF-PUMP-8515
NSF-TANK-8514 RECIRCULATION PUMP
RATED @15 GPM, ΔP=20PSI
MATERIAL: PTFE/EPDM
MOTOR: AIR OPERATED

NSF-PUMP-8565
TRANSFER PUMP TO PAS BLOWDOWN TANKS
RATED @15 GPM, ΔP=20PSI
MATERIAL: PTFE/EPDM
MOTOR: AIR OPERATED

DRAWING STATUS

NO.	DATE	REVISION DESCRIPTION	DRAWN	CHK	REVIEW ENGR	REVIEW ENGR	PE CHKD	PROJ. MGR.	R.A.E. W.P.
0D	06/01/09	50% DESIGN FINAL	SDN						
0E0	08/11/09	95% DESIGN REVIEW COMMENT SUBMITTAL	SDN						
0E0	09/03/09	95% DESIGN REVIEW WEEKLY UPDATE SUBMITTAL	SDN						
0E0	09/17/09	95% DESIGN REVIEW WEEKLY UPDATE SUBMITTAL	SDN						
0F	09/22/09	95% DESIGN FINAL	SDN						
1	10/05/09	95% DESIGN FINAL	SDN						
2	11/06/09	DRB COMMENTS INCORPORATED	SDN						

NOTES:

1. THIS CONNECTION TO BE USED IN THE EVENT THAT A MAJOR SPILL OCCURS AND THAT THE CONTENTS OF THE MAJOR SPILL TANK NEEDS TO BE EMPTIED INTO THE ACETIC ACID COLLECTION TANK FOR PROCESSING.
2. ALL TAGS ARE PREFIXED WITH 842 UNLESS OTHERWISE NOTED.
3. ALL PIPING, FITTINGS AND VALVING TO BE PER SPECIFICATION 15120.
4. TANK TO BE PROVIDED BY EG&G. SUBCONTRACTOR RESPONSIBLE FOR INSTALLATION OF TANK. ALL OTHER ITEMS ON THIS PAGE TO BE PROVIDED AND INSTALLED BY SUBCONTRACTOR.

INTERLOCK LEGEND:

I-1	INTERLOCK LIC
I-2	INTERLOCK SDS COLLECTION
I-3	NITRIC REJECT HOLDING TANK
I-4	INTERLOCK NITRIC ACID COLLECTION
I-5	INTERLOCK LEWISITE COLLECTION
I-6	INTERLOCK MAJOR SPILL COLLECTION
I-7	INTERLOCK CDS STORAGE & DISTRIBUTION
I-8	INTERLOCK GA PROCESSING

Symbol	Description	Date	Approved
2	ISSUED FOR CONSTRUCTION		
1	95% DESIGN FINAL		
0F	95% DESIGN FINAL		
0E	95% DESIGN REVIEW COMMENTS		
0D	50% DESIGN FINAL		
0C	50% DESIGN REVIEW COMMENTS		
0B	30% DESIGN FINAL	02/11/09	
0A	30% DESIGN REVIEW COMMENTS	02/02/09	

Revisions

DEPARTMENT OF THE ARMY
PROGRAM MANAGER FOR
CHEMICAL DEMILITARIZATION
ABERDEEN PROVING GROUND, MARYLAND

US ARMY ENGINEER DISTRICT SACRAMENTO
CORPS OF ENGINEERS
SACRAMENTO, CALIFORNIA

EG&G A Division of URS

US Army Corps of Engineers

TOOELE ARMY DEPOT
TOOELE, UTAH

CHEMICAL STOCKPILE DISPOSAL PROGRAM
AREA 10 LIQUID INCINERATOR (ATLIC)
NITRIC REJECT COLLECTION SYSTEM

PIPING & INSTRUMENT DIAGRAM

Drawn by: SD NICHOLES	Date: 01/12/09		
Checked by:	EG&G Approved:	Scale: NO SCALE	Sheet reference number: EG-22-D-8215
Engineer:	PMCD Mgr. Concur: N/A		

EG&G Contract No. DACA67-89-C-0016
Sheet 1 of 1
Rev. 2

2 UNCONTROLLED COPY - UNLESS STAMPED OTHERWISE BY DCC

UNCONTROLLED COPY - UNLESS STAMPED OTHERWISE BY DCC

DRAWING STATUS										
NO.	DATE	REVISION DESCRIPTION	DRAWN	CHK	PROJ ENG CHGE	PROJ ENG CHGE	PM LEVEL	PROJ MGR	DIV C OR MGR
OE.a	08/11/09	95% DESIGN REVIEW COMMENT SUBMITTAL	SDN						
OE.b	09/03/09	95% DESIGN REVIEW COMMENT SUBMITTAL	SDN						
OE.c	09/11/09	95% DESIGN REVIEW COMMENT SUBMITTAL	SDN						
OE.d	09/11/09	95% DESIGN REVIEW COMMENT SUBMITTAL	SDN						
OF	09/22/09	95% DESIGN FINAL	SDN						
1	10/05/09	95% DESIGN FINAL	SDN						
2	11/12/09	DRB COMMENTS INCORPORATED	SDN						

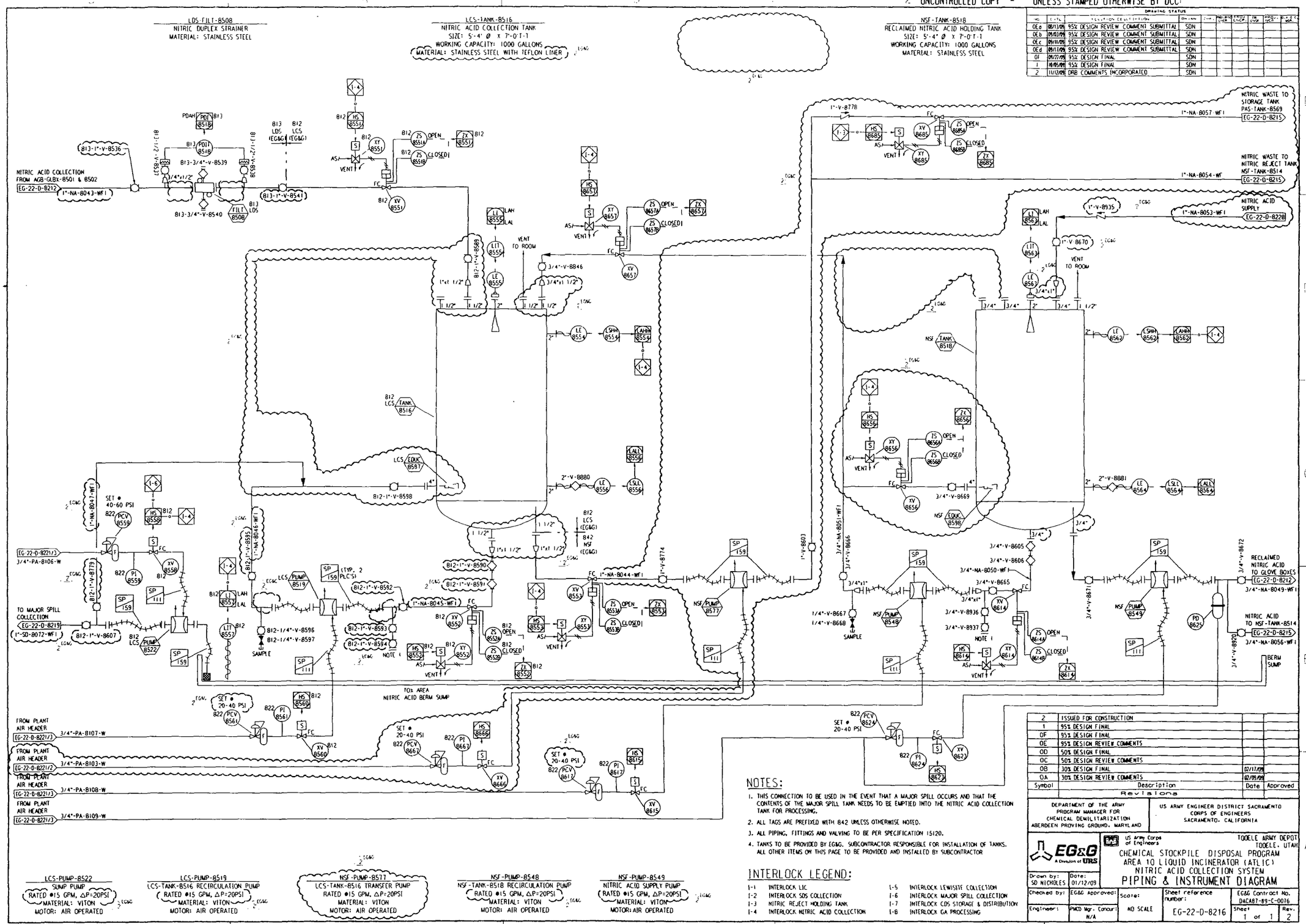

NOTES:

1. THIS CONNECTION TO BE USED IN THE EVENT THAT A MAJOR SPILL OCCURS AND THAT THE CONTENTS OF THE MAJOR SPILL TANK NEEDS TO BE EMPTIED INTO THE NITRIC ACID COLLECTION TANK FOR PROCESSING.
2. ALL TAGS ARE PREFIXED WITH 842 UNLESS OTHERWISE NOTED.
3. ALL PIPING, FITTINGS AND VALVING TO BE PER SPECIFICATION 15120.
4. TANKS TO BE PROVIDED BY EG&G. SUBCONTRACTOR RESPONSIBLE FOR INSTALLATION OF TANKS. ALL OTHER ITEMS ON THIS PAGE TO BE PROVIDED AND INSTALLED BY SUBCONTRACTOR

INTERLOCK LEGEND:

I-1	INTERLOCK LIC	I-5	INTERLOCK LEWISITE COLLECTION
I-2	INTERLOCK SDS COLLECTION	I-6	INTERLOCK MAJOR SPILL COLLECTION
I-3	NITRIC REJECT HOLDING TANK	I-7	INTERLOCK CDS STORAGE & DISTRIBUTION
I-4	INTERLOCK NITRIC ACID COLLECTION	I-8	INTERLOCK GA PROCESSING

LCS-PUMP-8522
SUMP PUMP
RATED @15 GPM, ΔP=20PSI
MATERIAL: VITON
MOTOR: AIR OPERATED

LCS-PUMP-8519
LCS-TANK-8516 RECIRCULATION PUMP
RATED @15 GPM, ΔP=20PSI
MATERIAL: VITON
MOTOR: AIR OPERATED

NSF-PUMP-8577
LCS-TANK-8516 TRANSFER PUMP
RATED @15 GPM, ΔP=20PSI
MATERIAL: VITON
MOTOR: AIR OPERATED

NSF-PUMP-8548
NSF-TANK-8518 RECIRCULATION PUMP
RATED @15 GPM, ΔP=20PSI
MATERIAL: VITON
MOTOR: AIR OPERATED

NSF-PUMP-8549
NITRIC ACID SUPPLY PUMP
RATED @15 GPM, ΔP=20PSI
MATERIAL: VITON
MOTOR: AIR OPERATED

Symbol	Description	Date	Approved
2	ISSUED FOR CONSTRUCTION		
1	95% DESIGN FINAL		
OF	95% DESIGN FINAL		
OE	95% DESIGN REVIEW COMMENTS		
OD	50% DESIGN FINAL		
OC	50% DESIGN REVIEW COMMENTS		
OB	30% DESIGN FINAL	02/17/09	
OA	30% DESIGN REVIEW COMMENTS	02/05/09	

Revisions

DEPARTMENT OF THE ARMY
PROGRAM MANAGER FOR
CHEMICAL DEMILITARIZATION
ABERDEEN PROVING GROUND, MARYLAND

US ARMY ENGINEER DISTRICT SACRAMENTO
CORPS OF ENGINEERS
SACRAMENTO, CALIFORNIA

EG&G A Division of URS

US Army Corps of Engineers

TOOELE ARMY DEPOT
TOOELE, UTAH

CHEMICAL STOCKPILE DISPOSAL PROGRAM
AREA 10 LIQUID INCINERATOR (ATLIC)
NITRIC ACID COLLECTION SYSTEM
PIPING & INSTRUMENT DIAGRAM

Drawn by: SD NICHOLES	Date: 01/12/09				
Checked by:	EG&G Approved:	Scale: NO SCALE	Sheet reference number: EG-22-D-8216	EG&G Contract No. DACA87-89-C-0016	
Engineer:	PMCD Mgr. Concur: N/A			Sheet 1 of 1	Rev. 2

UNCONTROLLED COPY - UNLESS STAMPED OTHERWISE BY DCC

UNCONTROLLED COPY - UNLESS STAMPED OTHERWISE BY DCC

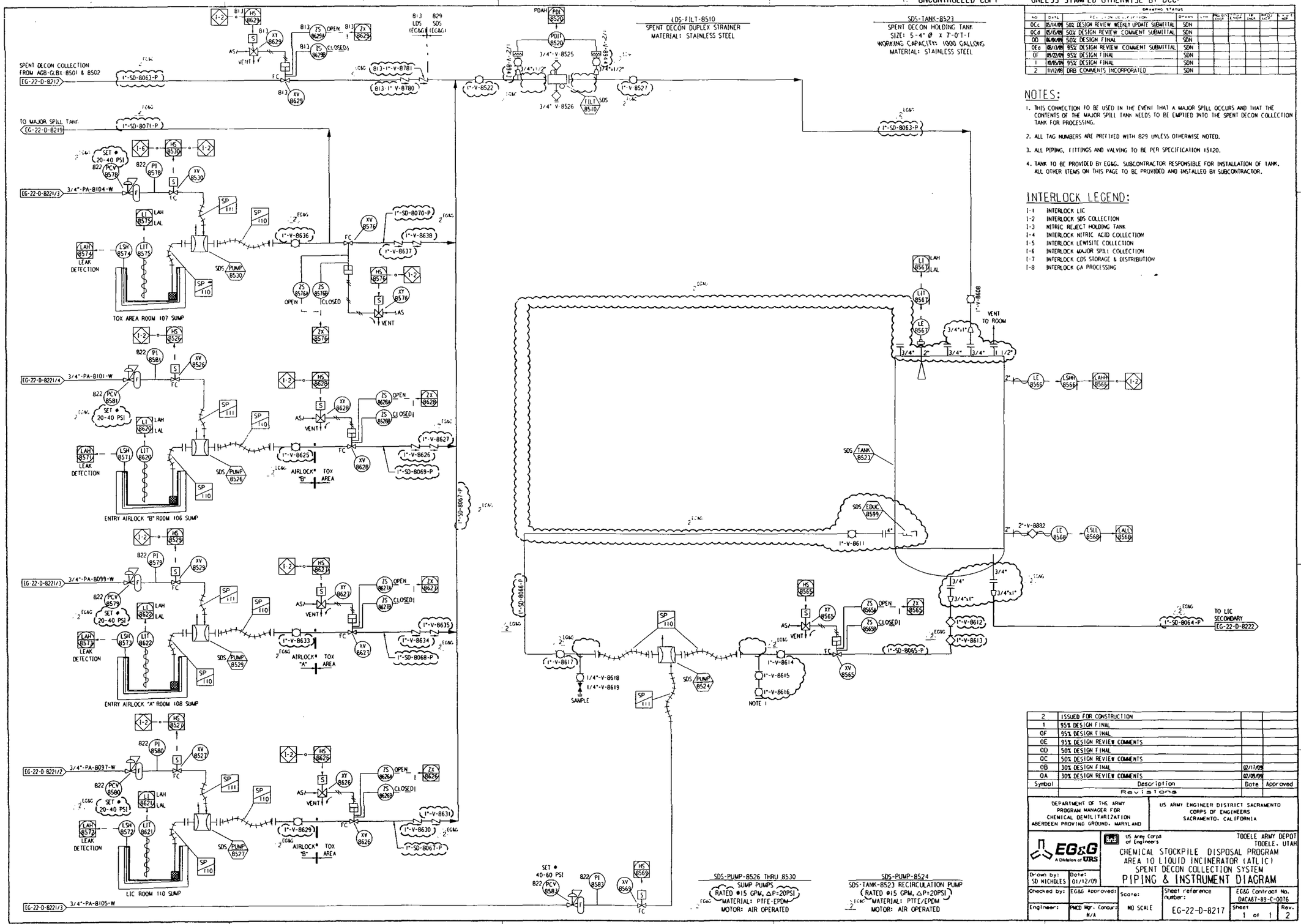

DRAWING STATUS									
NO	DATE	REVISION DESCRIPTION	DRAWN	CHK	PROJ ENGR	CONST ENGR	IN CHG	PROJ MGR	R.A.E.C. MGR
OCc	05/14/09	50% DESIGN REVIEW WEEKLY UPDATE SUBMITTAL	SDN						
OCd	05/15/09	50% DESIGN REVIEW COMMENT SUBMITTAL	SDN						
OD	06/04/09	50% DESIGN FINAL	SDN						
OEa	08/13/09	95% DESIGN REVIEW COMMENT SUBMITTAL	SDN						
OF	09/22/09	95% DESIGN FINAL	SDN						
1	10/05/09	95% DESIGN FINAL	SDN						
2	11/12/09	DRB COMMENTS INCORPORATED	SDN						

NOTES:

1. THIS CONNECTION TO BE USED IN THE EVENT THAT A MAJOR SPILL OCCURS AND THAT THE CONTENTS OF THE MAJOR SPILL TANK NEEDS TO BE EMPTIED INTO THE SPENT DECON COLLECTION TANK FOR PROCESSING.
2. ALL TAG NUMBERS ARE PREFIXED WITH 829 UNLESS OTHERWISE NOTED.
3. ALL PIPING, FITTINGS AND VALVING TO BE PER SPECIFICATION 15120.
4. TANK TO BE PROVIDED BY EG&G. SUBCONTRACTOR RESPONSIBLE FOR INSTALLATION OF TANK. ALL OTHER ITEMS ON THIS PAGE TO BE PROVIDED AND INSTALLED BY SUBCONTRACTOR.

INTERLOCK LEGEND:

I-1 INTERLOCK LIC
I-2 INTERLOCK SDS COLLECTION
I-3 NITRIC REJECT HOLDING TANK
I-4 INTERLOCK NITRIC ACID COLLECTION
I-5 INTERLOCK LEWISITE COLLECTION
I-6 INTERLOCK MAJOR SPILL COLLECTION
I-7 INTERLOCK CDS STORAGE & DISTRIBUTION
I-8 INTERLOCK GA PROCESSING

Revisions			
2	ISSUED FOR CONSTRUCTION		
1	95% DESIGN FINAL		
OF	95% DESIGN FINAL		
OE	95% DESIGN REVIEW COMMENTS		
OD	50% DESIGN FINAL		
OC	50% DESIGN REVIEW COMMENTS		
OB	30% DESIGN FINAL	02/17/09	
OA	30% DESIGN REVIEW COMMENTS	02/09/09	
Symbol	Description	Date	Approved

DEPARTMENT OF THE ARMY
PROGRAM MANAGER FOR
CHEMICAL DEMILITARIZATION
ABERDEEN PROVING GROUND, MARYLAND

US ARMY ENGINEER DISTRICT SACRAMENTO
CORPS OF ENGINEERS
SACRAMENTO, CALIFORNIA

EG&G A Division of URS

US Army Corps of Engineers

TOOELE ARMY DEPOT
TOOELE, UTAH

CHEMICAL STOCKPILE DISPOSAL PROGRAM
AREA 10 LIQUID INCINERATOR (ATLIC)
SPENT DECON COLLECTION SYSTEM

PIPING & INSTRUMENT DIAGRAM

Drawn by: SD NICHOLES	Date: 01/12/09		
Checked by:	EG&G Approved:	Scale: NO SCALE	Sheet reference number: EG-22-D-8217
Engineer:	PMCD Mgr. Concur: N/A		Sheet 1 of 1

EG&G Contract No. DACA87-89-C-0076
Rev. 2

UNCONTROLLED COPY - UNLESS STAMPED OTHERWISE BY DCC

UNCONTROLLED COPY - UNLESS STAMPED OTHERWISE BY DCC

LCS-TANK-8534
MAJOR SPILL COLLECTION TANK
SIZE: 5'-4" Ø x 7'-0"-T
WORKING CAPACITY: 1000 GALLONS
MATERIAL: STAINLESS STEEL

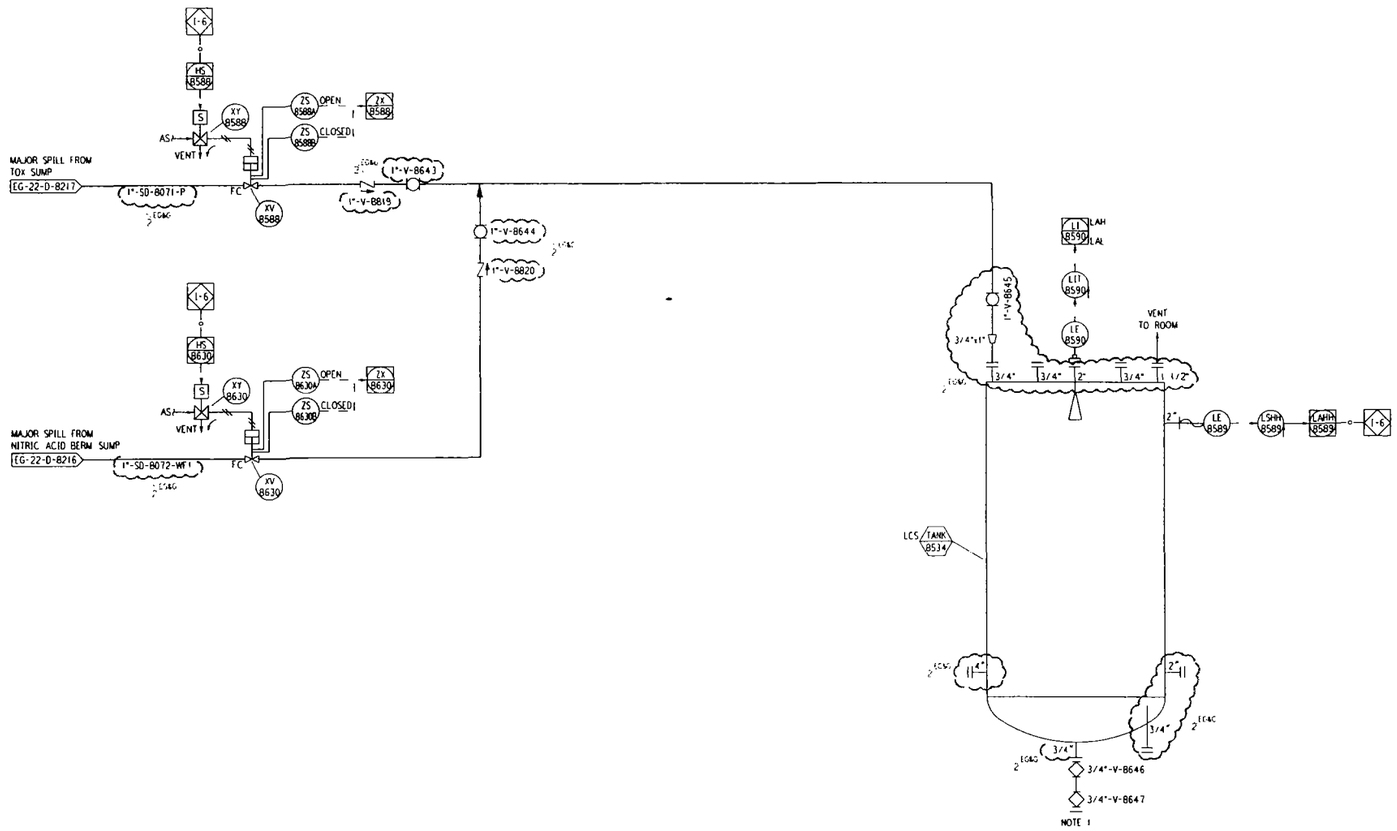

DRAWING STATUS									
NO.	DATE	REVISION DESCRIPTION	DR. NO.	CHK	PROJ ENGR	PROJ ENGR	PM	PROJ MGR	DCC NO.
OCo	04/30/09	50% DESIGN REVIEW WEEKLY UPDATE SUBMITTAL	SDN						
OD	06/01/09	50% DESIGN FINAL	SDN						
OEo	08/13/09	95% DESIGN REVIEW WEEKLY UPDATE SUBMITTAL	SDN						
OF	09/22/09	95% DESIGN FINAL	SDN						
1	10/05/09	95% DESIGN FINAL	SDN						
2	11/12/09	95% DRB COMMENTS INCORPORATED	SDN						

NOTES:

1. IN THE EVENT THE MAJOR SPILL TAKE IS USED. THE TANK WILL BE CONNECTED TO THE APPROPRIATE SYSTEM VIA A HOSE FOR TANK PUMP OUT.
2. ALL TAG NUMBERS ARE PREFIXED WITH 812 UNLESS NOTED OTHERWISE.
3. ALL PIPING, FITTINGS AND VALVING TO BE PER SPECIFICATION 15120.
4. TANK TO BE PROVIDED BY EG&G. SUBCONTRACTOR RESPONSIBLE FOR INSTALLATION OF TANK. ALL OTHER ITEMS ON THIS PAGE TO BE PROVIDED AND INSTALLED BY SUBCONTRACTOR.

INTERLOCK LEGEND:

I-1	INTERLOCK LIC
I-2	INTERLOCK SDS COLLECTION
I-3	NITRIC REJECT HOLDING TANK
I-4	INTERLOCK NITRIC ACID COLLECTION
I-5	INTERLOCK LEWISITE COLLECTION
I-6	INTERLOCK MAJOR SPILL COLLECTION
I-7	INTERLOCK CDS STORAGE & DISTRIBUTION
I-8	INTERLOCK GA PROCESSING

Symbol	Description	Date	Approved
2	ISSUED FOR CONSTRUCTION		
1	95% DESIGN FINAL		
OF	95% DESIGN FINAL		
OE	95% DESIGN REVIEW COMMENTS		
OD	50% DESIGN FINAL		
OC	50% DESIGN REVIEW COMMENTS		
OB	30% DESIGN FINAL	02/17/09	
OA	30% DESIGN REVIEW COMMENTS	02/03/08	

Revisions

DEPARTMENT OF THE ARMY
PROGRAM MANAGER FOR
CHEMICAL DEMILITARIZATION
ABERDEEN PROVING GROUND, MARYLAND

US ARMY ENGINEER DISTRICT SACRAMENTO
CORPS OF ENGINEERS
SACRAMENTO, CALIFORNIA

EG&G A Division of URS

US Army Corps of Engineers

TOOELE ARMY DEPOT
TOOELE, UTAH

CHEMICAL STOCKPILE DISPOSAL PROGRAM
AREA 10 LIQUID INCINERATOR (ATLIC)
MAJOR SPILL COLLECTION SYSTEM

PIPING & INSTRUMENT DIAGRAM

Drawn by: SD NICHOLES	Date: 01/21/09				
Checked by:	EG&G Approved:	Scale:	Sheet reference number:	EG&G Contract No. DACA67-89-C-0076	
Engineer:	PMCD Mgr. Concur: N/A	NO SCALE	EG-22-D-8219	Sheet 1 of 1	Rev. 2

UNCONTROLLED COPY - UNLESS STAMPED OTHERWISE BY DCC

2 UNCONTROLLED COPY - UNLESS STAMPED OTHERWISE BY DCC 1

SDF-BS-8320
BASKET STRAINER
SIZE: 3/4" NPT DUPLEX

SDF-PUMP-8330
SPENT DECON FEED PUMP #1
LIQUIFLO MODEL H5FL6PEE001000US-894
1HP 3/60/230/460
CAPACITY: 1 GPM AT 1110 RPM

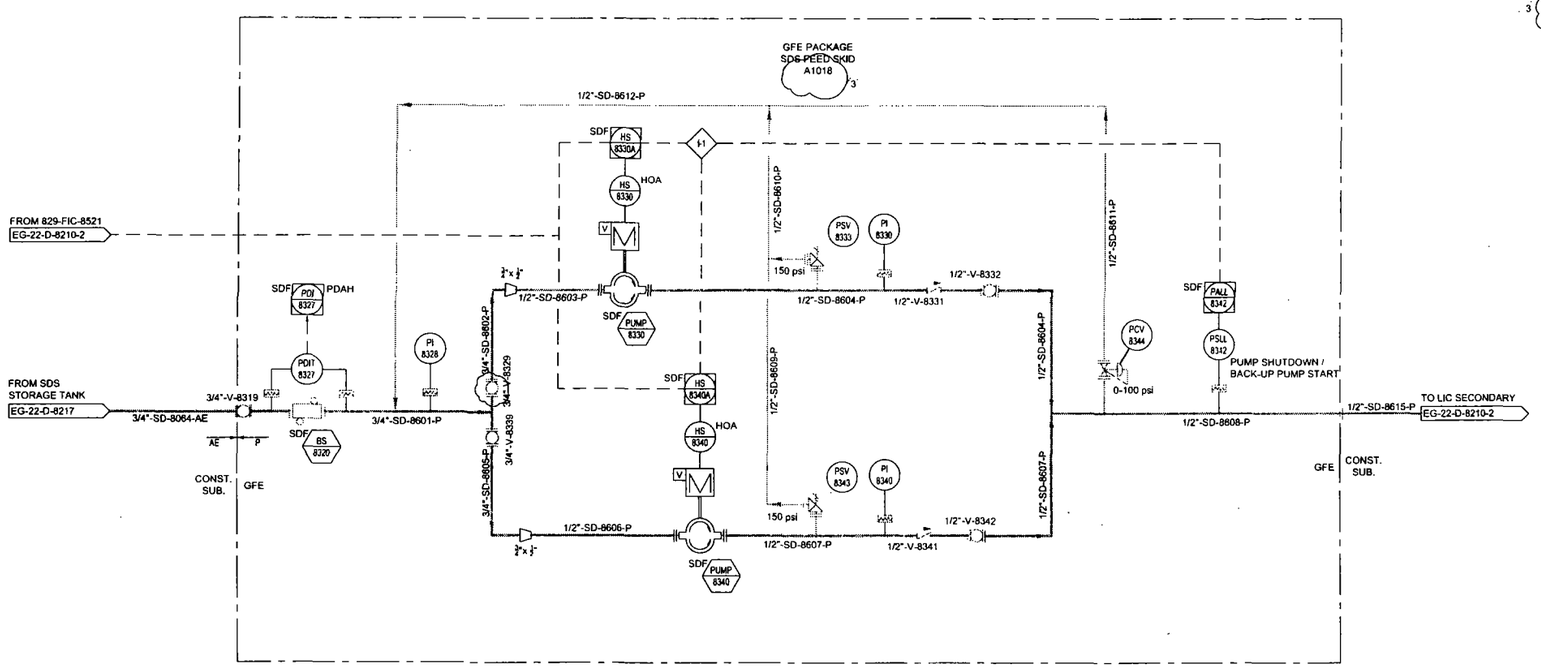

REFERENCE DRAWINGS

~~EG-22-D-8207~~
EG-22-P-8250

NOTES

1. ALL EQUIPMENT, INSTRUMENTS, VALVES ARE PREFIXED WITH FUNCTIONAL AREA DESIGNATION 834 UNLESS OTHERWISE NOTED
2. SEE LIC ALARM AND INTERLOCK MATRIX "ATLIC A&I MATRIX.XLS" FOR ALARM FUNCTIONS AND SET POINTS.
3. ALL ANALOG INSTRUMENT VALUES WILL BE COLLECTED BY THE FACILITY CONTROL SYSTEM AND RECORDED AT A MINIMUM FREQUENCY OF ONCE PER MINUTE.
4. ALL EQUIPMENT GOVERNMENT FURNISHED (GFE) UNLESS OTHERWISE NOTED.
5. FLANGES SUPPLIED ON PRE-FABRICATED SKID FOR LINE CONNECTIONS
6. ALL PIPING TO CONFORM TO PIPE SPECIFICATION FOR CLASS P SERVICE UNLESS OTHERWISE NOTED. SEE DRAWING EG-22-P-8250 FOR PIPE CLASS SPECIFICATIONS.

INTERLOCKS:
I-1 STAND-BY FEED PUMP STARTS AND ACTIVE FEED PUMP SHUTS DOWN ON PALL-8342.

SDF-PUMP-8340
SPENT DECON FEED PUMP #2
LIQUIFLO MODEL H5FL6PEE001000US-894
1HP 3/60/230/460
CAPACITY: 1 GPM AT 1110 RPM

Symbol	Description	Date	Approved
3	95% DESIGN FINAL - ADDITIONAL COMMENTS INCORPORATED	12/14/09	
2	95% DESIGN FINAL - DRB COMMENTS INCORPORATED	11/03/09	
1	95% DESIGN FINAL - ISSUED FOR CONSTRUCTION	10/13/09	

Revisions

Continental Research and Engineering, LLC

UNLESS OTHERWISE SPECIFIED
DIMENSIONS ARE IN INCHES.
BREAK SHARP EDGES = .005/.015
DECIMAL TOLERANCE AFTER FINISH
.X =±.1
.XX =±.06
.XXX =±.015
ANGLES =±0°-30'

DEPARTMENT OF THE ARMY
PROGRAM MANAGER FOR
CHEMICAL DEMILITARIZATION
ABERDEEN PROVING GROUND, MARYLAND

US ARMY ENGINEER DISTRICT SACRAMENTO
CORPS OF ENGINEERS
SACRAMENTO, CALIFORNIA

EG&G A Division of URS

US Army Corps of Engineers

TOOELE ARMY DEPOT
TOOELE, UTAH

CHEMICAL STOCKPILE DISPOSAL PROGRAM
AREA 10
AREA 10 LIQUID INCINERATOR (ATLIC)
SDS FEED SYSTEM P&ID

Drawn by: CR&E-MV	Date: 02/04/09		
Checked by:	EG&G Approved:	Scale: NO SCALE	Sheet reference number: EG-22-D-8222
Engineer:	PMCD Mgr. Concur: N/A		

EG&G Contract No. DACA87-89-C-0076
Sheet 1 of 1
Rev. 3

2 UNCONTROLLED COPY - UNLESS STAMPED OTHERWISE BY DCC 1

WFS-PUMP-8655
AGENT GA/L FEED PUMP #1
LIQUIFLO MODEL H3FC1PEB002001US-894
1HP 3/60/230/460
CAPACITY: 300 LBM/HR (L) AT 827 RPM
300 LBM/HR (GA) AT 965 RPM

REFERENCE DRAWINGS:

EG-22-G-8208
EG-22-P-8250

NOTES:

1. ALL EQUIPMENT, INSTRUMENTS, VALVES ARE PREFIXED WITH FUNCTIONAL AREA DESIGNATION 807 UNLESS OTHERWISE NOTED
2. DELETED
3. SEE LIC ALARM AND INTERLOCK MATRIX "ATLIC A&I MATRIX.XLS" FOR ALARM FUNCTIONS AND SET POINTS.
4. ALL ANALOG INSTRUMENT VALUES WILL BE COLLECTED BY THE FACILITY CONTROL SYSTEM AND RECORDED AT A MINIMUM FREQUENCY OF ONCE PER MINUTE.
5. ALL EQUIPMENT GOVERNMENT FURNISHED (GFE) UNLESS OTHERWISE NOTED.
6. FLANGES SUPPLIED ON PRE-FABRICATED SKID FOR LINE CONNECTIONS.
7. ALL PIPING TO CONFORM TO PIPE SPECIFICATION FOR CLASS AE SERVICE UNLESS OTHERWISE NOTED. SEE DRAWING EG-22-P-8250 FOR PIPE CLASS SPECIFICATIONS.

INTERLOCKS:
I-1 STAND-BY FEED PUMP STARTS AND ACTIVE FEED PUMP SHUTS DOWN ON PALL-8692 WHEN FEEDING LEWISITE. ACTIVE FEED PUMP SHUTS DOWN AND STAND-BY FEED PUMP REQUIRES OPERATOR START WHEN FEEDING AGENT GA.

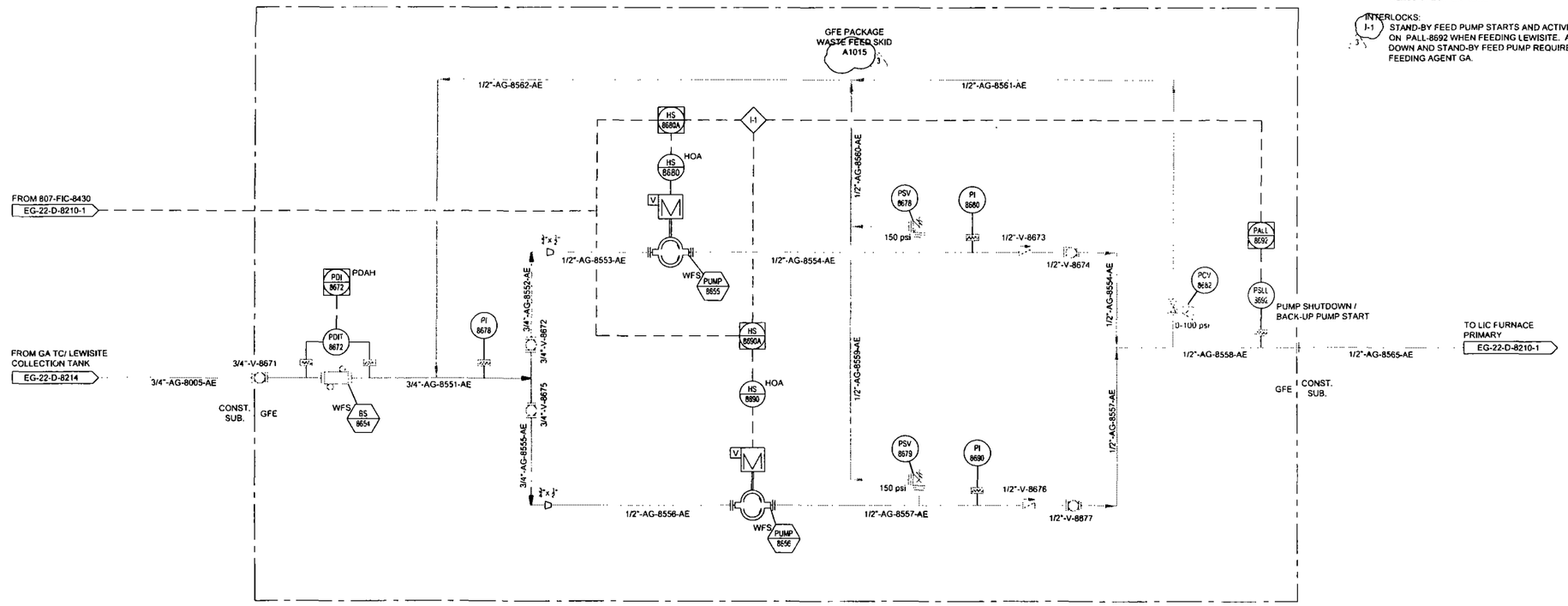

WFS-BS-8654
BASKET STRAINER
SIZE: 3/4" NPT DUPLEX

WFS-PUMP-8656
AGENT GA/L FEED PUMP #2
LIQUIFLO MODEL H3FC1PEB002001US-894
1HP 3/60/230/460
CAPACITY: 300 LBM/HR (L) AT 827 RPM
300 LBM/HR (GA) AT 965 RPM

Symbol	Description	Date	Approved
3	95% DESIGN FINAL - ADDITIONAL COMMENTS INCORPORATED	12/14/09	
2	95% DESIGN FINAL - DRB COMMENTS INCORPORATED	11/03/09	
1	95% DESIGN FINAL - ISSUED FOR CONSTRUCTION	10/13/09	

Revisions

Continental Research and Engineering, LLC

UNLESS OTHERWISE SPECIFIED
DIMENSIONS ARE IN INCHES.
BREAK SHARP EDGES - .005/.015
DECIMAL TOLERANCE AFTER FINISH
.X =±.1
.XX =±.06
.XXX =±.015
ANGLES =±0°-30'

DEPARTMENT OF THE ARMY
PROGRAM MANAGER FOR
CHEMICAL DEMILITARIZATION
ABERDEEN PROVING GROUND, MARYLAND

US ARMY ENGINEER DISTRICT SACRAMENTO
CORPS OF ENGINEERS
SACRAMENTO, CALIFORNIA

EG&G A Division of URS

US Army Corps of Engineers

TOOELE ARMY DEPOT
TOOELE, UTAH

CHEMICAL STOCKPILE DISPOSAL PROGRAM
AREA 10
AREA 10 LIQUID INCINERATOR (ATLIC)
WASTE FEED SYSTEM GA/L P&ID

Drawn by: CR&E-MV	Date: 02/04/09		
Checked by:	EG&G Approved:	Scale: NO SCALE	Sheet reference number: EG-22-D-8223
Engineer:	PMCD Mgr. Concur: N/A		EG&G Contract No. DACA87-89-C-0076
			Sheet 1 of 1
			Rev. 3

UNCONTROLLED COPY - UNLESS STAMPED OTHERWISE BY DCC[1]

PAS-TANK-8569
NITRIC WASTE STORAGE TANK
SIZE: 8'-6" Ø X 12'-0" T-T
WORKING CAPACITY: 4500 GALLONS
MATERIAL: FIBER REINFORCED PLASTIC

PAS-TANK-8551
PAS BLOWDOWN STORAGE TANK
SIZE: 11'-4" Ø X 16'-0" T-T
WORKING CAPACITY: 10500 GALLONS
MATERIAL: FIBER REINFORCED PLASTIC

PAS-TANK-8552
PAS BLOWDOWN STORAGE TANK
SIZE: 11'-4" Ø X 16'-0" T-T
WORKING CAPACITY: 10500 GALLONS
MATERIAL: FIBER REINFORCED PLASTIC

PAS-TANK-8553
PAS BLOWDOWN STORAGE TANK
SIZE: 11'-4" Ø X 16'-0" T-T
WORKING CAPACITY: 10500 GALLONS
MATERIAL: FIBER REINFORCED PLASTIC

NOTES:

1. ALL TAG NUMBERS ARE PREFIXED WITH B19 UNLESS OTHERWISE NOTED.
2. ALL PIPING, FITTINGS AND VALVING TO BE PER SPECIFICATION 15120.
3. TANKS TO BE PROVIDED BY EG&G. SUBCONTRACTOR RESPONSIBLE FOR INSTALLATION OF TANKS. ALL OTHER ITEMS ON THIS PAGE TO BE PROVIDED AND INSTALLED BY SUBCONTRACTOR

INTERLOCK LEGEND:

I-3 NITRIC REJECT HOLDING TANK
I-9 INTERLOCK PAS STORAGE

DRAWING STATUS

NO	DATE	REVISION DESCRIPTION	DRAWN	CHK	PRO ENG	PROJ ENGR	TR ENG	PROJ MGR	D.A.C. MGR
0Aa	05/15/09	50% DESIGN REVIEW COMMENT SUBMITTAL	SDN						
0B	06/01/09	50% DESIGN FINAL	SDN						
0Ca	06/13/09	95% DESIGN REVIEW COMMENT SUBMITTAL	SDN						
0Cb	09/02/09	95% DESIGN REVIEW COMMENT SUBMITTAL	SDN						
0D	09/24/09	95% DESIGN FINAL	SDN						
1	10/05/09	95% DESIGN FINAL	SDN						
2	11/24/09	DRB COMMENTS INCORPORTED	SDN						

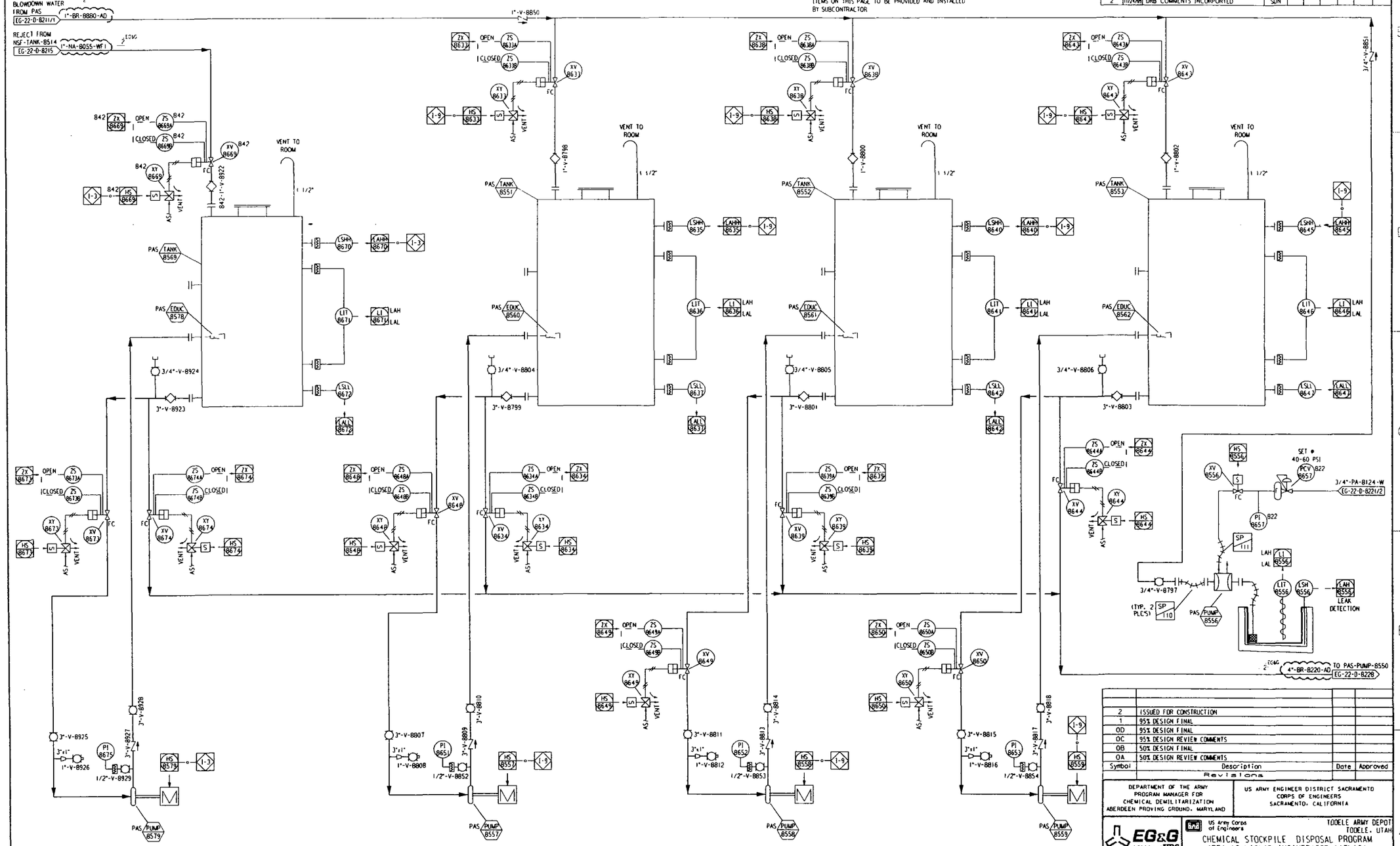

PAS-PUMP-8579
PAS-TANK-8569 RECIRCULATION PUMP
RATED: 23 GPM, P=25 PSI
PUMP MATERIAL: DI/TEFZEL
MOTOR: 2 HP

PAS-PUMP-8557
PAS-TANK-8551 RECIRCULATION PUMP
RATED: 23 GPM, P=25 PSI
PUMP MATERIAL: DI/TEFZEL
MOTOR: 2 HP

PAS-PUMP-8558
PAS-TANK-8552 RECIRCULATION PUMP
RATED: 23 GPM, P=25 PSI
PUMP MATERIAL: DI/TEFZEL
MOTOR: 2 HP

PAS-PUMP-8559
PAS-TANK-8553 RECIRCULATION PUMP
RATED: 23 GPM, P=25 PSI
PUMP MATERIAL: DI/TEFZEL
MOTOR: 2 HP

PAS-PUMP-8556
BLOWDOWN STORAGE AREA SUMP PUMP
RATED: 30 GPM, P=30 PSI
PUMP MATERIAL: PTFE/EPDM
MOTOR: AIR OPERATED

Symbol	Description	Date	Approved
2	ISSUED FOR CONSTRUCTION		
1	95% DESIGN FINAL		
0D	95% DESIGN FINAL		
0C	95% DESIGN REVIEW COMMENTS		
0B	50% DESIGN FINAL		
0A	50% DESIGN REVIEW COMMENTS		

Revisions

DEPARTMENT OF THE ARMY
PROGRAM MANAGER FOR
CHEMICAL DEMILITARIZATION
ABERDEEN PROVING GROUND, MARYLAND

US ARMY ENGINEER DISTRICT SACRAMENTO
CORPS OF ENGINEERS
SACRAMENTO, CALIFORNIA

EG&G A Division of URS

US Army Corps of Engineers

TOOELE ARMY DEPOT
TOOELE, UTAH

CHEMICAL STOCKPILE DISPOSAL PROGRAM
AREA 10 LIQUID INCINERATOR (ATLIC)
PAS BLOWDOWN STORAGE

PIPING & INSTRUMENT DIAGRAM

Drawn by: SD NICHOLES	Date: 05/11/09		
Checked by:	EG&G Approved:	Scale: NO SCALE	Sheet reference number: EG-22-D-8227
Engineer:	PMCD Mgr. Concur: N/A		Sheet 1 of 1

EG&G Contract No. DAC87-89-C-0076

Rev. 2

UNCONTROLLED COPY - UNLESS STAMPED OTHERWISE BY DCC[1]

UNCONTROLLED COPY - UNLESS STAMPED OTHERWISE BY DCC[1]

DRAWING STATUS

NO	DATE	REVISION DESCRIPTION	DRAWN	CHK	PROJ ENGR	SYSTEMS ENGR	I&C ENGR	PROJ MGR	M.C. DIV MGR
0Ao	05/15/09	50% DESIGN REVIEW COMMENTS SUBMITTAL	SDN						
0B	06/01/09	50% DESIGN FINAL	SDN						
0C	08/13/09	95% DESIGN REVIEW COMMENTS SUBMITTAL	SDN						
0D	09/27/09	95% DESIGN FINAL	SDN						
1	10/05/09	95% DESIGN FINAL	SDN						
2	11/20/09	DRB COMMENTS INCORPORATED	SDN						

NOTES:

1. UNLOAD STATION WILL MEET OSHA REQUIREMENTS FOR FALL PROTECTION.
2. ALL TAG NUMBERS PREFIXED WITH 819 UNLESS NOTED OTHERWISE.
3. ALL PIPING, FITTINGS AND VALVING TO BE PER SPECIFICATION 15120.
4. ALL ITEMS ON THIS PAGE TO BE PROVIDED AND INSTALLED BY SUBCONTRACTOR.

INTERLOCK LEGEND:

I-1 INTERLOCK LIC
I-2 INTERLOCK SDS COLLECTION
I-3 NITRIC REJECT HOLDING TANK
I-4 INTERLOCK NITRIC ACID COLLECTION
I-5 INTERLOCK LEWISITE COLLECTION
I-6 INTERLOCK MAJOR SPILL COLLECTION
I-7 INTERLOCK CDS STORAGE & DISTRIBUTION
I-8 INTERLOCK GA PROCESSING

REFERENCE DRAWINGS:

EG-22-G-B204 GA/LEWISITE PROCESSING FACILITY GENERAL ARRANGEMENT

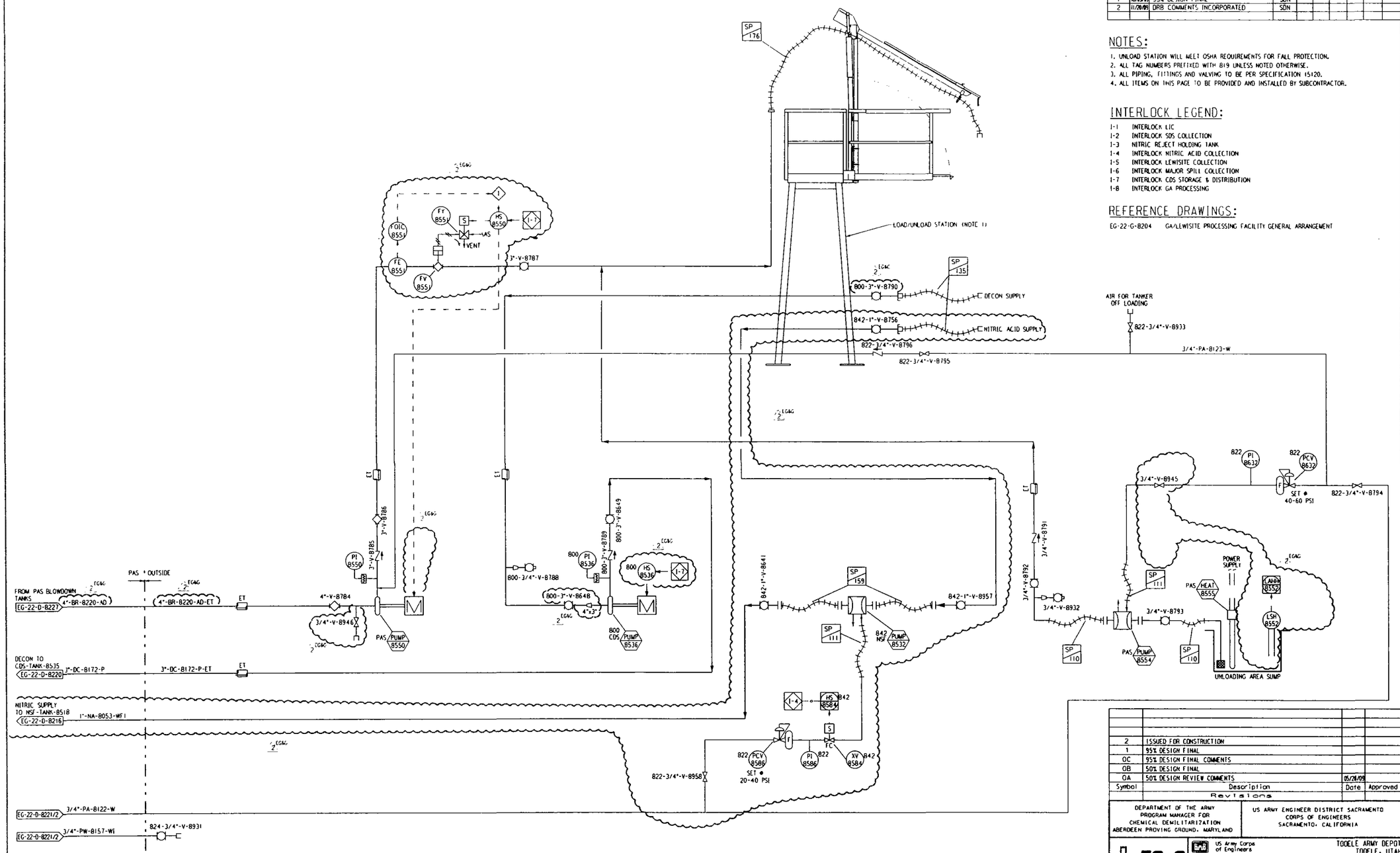

PAS-PUMP-8550
PAS BLOW DOWN LOADING PUMP
RATED: 200 GPM, ΔP=30 PSI
PUMP MATERIAL: DI/TEFZEL
MOTOR: 10 HP

CDS-PUMP-8536
SODIUM HYDROXIDE (18%) UNLOADING PUMP
RATED: 149 GPM, ΔP=52 PSI
MATERIAL: DI/TEFZEL
MOTOR: 10 HP

NSF-PUMP-8532
NITRIC ACID SUPPLY PUMP
RATED @15 GPM, ΔP=20PSI
MATERIAL: VITON
MOTOR: AIR OPERATED

PAS-PUMP-8554
SUMP PUMP
PUMP MATERIAL: PLASTIC
MOTOR: AIR OPERATED
SUMP MATERIAL: CONCRETE WITH EPOLOID E LINING

PAS-HEAT-8555
SUMP HEATER
DUTY: 1.5 KW
MATERIAL: MANUFACTURERS STANDARD

Symbol	Description	Date	Approved
2	ISSUED FOR CONSTRUCTION		
1	95% DESIGN FINAL		
0C	95% DESIGN FINAL COMMENTS		
0B	50% DESIGN FINAL		
0A	50% DESIGN REVIEW COMMENTS	05/26/09	

Revisions

DEPARTMENT OF THE ARMY
PROGRAM MANAGER FOR
CHEMICAL DEMILITARIZATION
ABERDEEN PROVING GROUND, MARYLAND

US ARMY ENGINEER DISTRICT SACRAMENTO
CORPS OF ENGINEERS
SACRAMENTO, CALIFORNIA

EG&G A Division of URS

US Army Corps of Engineers

TOOELE ARMY DEPOT
TOOELE, UTAH

CHEMICAL STOCKPILE DISPOSAL PROGRAM
AREA 10 LIQUID INCINERATOR (ATLIC)
PAS BLOWDOWN UNLOADING/DECON LOADING
PIPING & INSTRUMENT DIAGRAM

Drawn by: SD NICHOLES	Date: 05/11/09		
Checked by:	EG&G Approved:	Scale: NO SCALE	Sheet reference number: EG-22-D-8228
Engineer:	PMCD Mgr. Concur: N/A		Sheet 1 of 1

EG&G Contract No. DACA87-89-C-0076
Rev. 2

UNCONTROLLED COPY - UNLESS STAMPED OTHERWISE BY DCC[1]

2 UNCONTROLLED COPY - UNLESS STAMPED OTHERWISE BY DCC1

DRAWING STATUS

NO	DATE	REVISION DESCRIPTION	DRAWN	CHK	PROJ MGR FINAL	PROJ ENGR	CD FINAL	PROJ. MGR.	A & E MGR
0Aa	04/16/09	50% DESIGN REVIEW WEEKLY UPDATE SUBMITTAL	SDN						
0B	06/10/09	50% DESIGN FINAL	SDN						
0Ca	08/04/09	95% DESIGN REVIEW WEEKLY UPDATE SUBMITTAL	SDN						
0Cb	08/27/09	95% DESIGN REVIEW WEEKLY UPDATE SUBMITTAL	SDN						
1	10/05/09	95% DESIGN FINAL	SDN						
2	12/18/09	DRB COMMENTS INCORPORATED	SDN						

REFERENCE DRAWINGS:

EG-22-D-8212 AREA 10 GA/LEWISITE PROCESSING FACILITY GLOVEBOX 8501 P&ID
EG-22-D-8213 AREA 10 GA/LEWISITE PROCESSING FACILITY GLOVEBOX 8502 P&ID

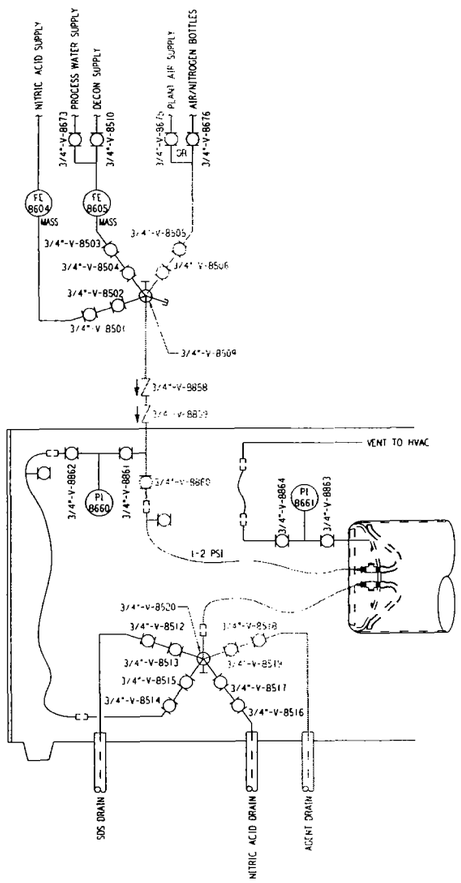

GA TC PROCESSING STEP 1:
DRAIN OF GA AGENT FROM TC

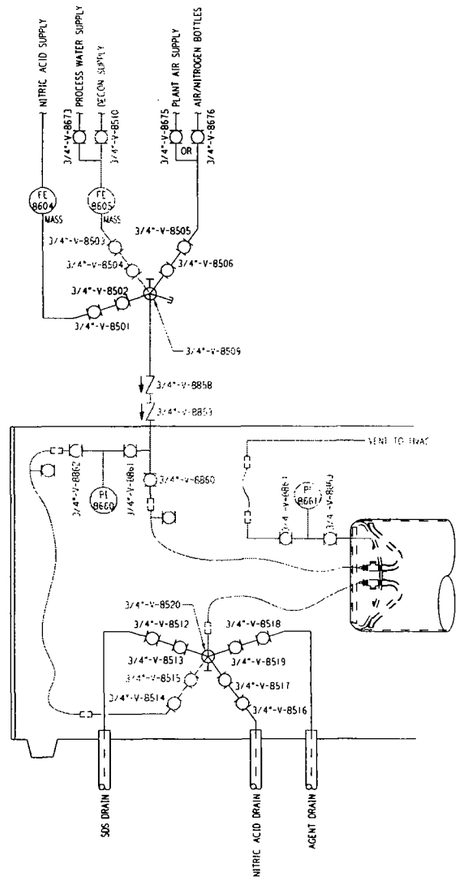

GA TC PROCESSING STEP 2:
TC DECONTAMINATION

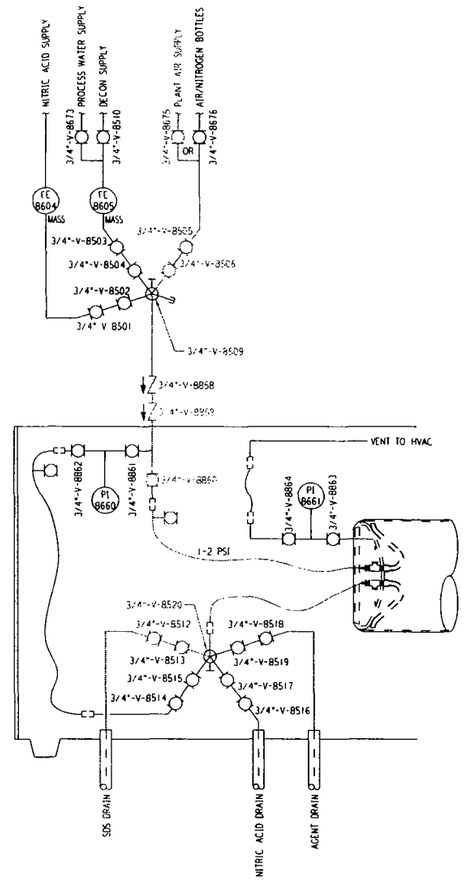

GA TC PROCESSING STEP 3:
DRAIN OF DECON RINSE FROM TC

Symbol	Description	Date	Approved
2	ISSUED FOR CONSTRUCTION		
1	95% DESIGN FINAL		
OC	95% DESIGN REVIEW COMMENTS		
OB	50% DESIGN FINAL		
OA	50% DESIGN REVIEW COMMENTS		

Revisions

DEPARTMENT OF THE ARMY
PROGRAM MANAGER FOR
CHEMICAL DEMILITARIZATION
ABERDEEN PROVING GROUND, MARYLAND

US ARMY ENGINEER DISTRICT SACRAMENTO
CORPS OF ENGINEERS
SACRAMENTO, CALIFORNIA

EG&G A Division of URS

US Army Corps of Engineers

TOOELE ARMY DEPOT
TOOELE, UTAH

CHEMICAL STOCKPILE DISPOSAL PROGRAM
AREA 10 LIQUID INCINERATOR (ATLIC)
GA TO TC GLOVEBOX

PROCESSING FLOW DIAGRAM

Drawn by: SD NICHOLS	Date: 04/10/09			
Checked by:	EG&G Approved:	Scale:	Sheet reference number:	EG&G Contract No. DACA87-89-C-0076
Engineer:	PMCD Mgr. Concur: N/A	NO SCALE	EG-22-F-8210	Sheet 1 of 2 Rev. 2

2 UNCONTROLLED COPY - UNLESS STAMPED OTHERWISE BY DCC1

UNCONTROLLED COPY - UNLESS STAMPED OTHERWISE BY DCC[1]

DRAWING STATUS									
NO.	DATE	REVISION DESCRIPTION	DRAWN						
0Aa	04/16/09	50% DESIGN REVIEW WEEKLY UPDATE SUBMITTAL	SDN						
0B	06/10/09	50% DESIGN FINAL	SDN						
0Co	08/27/09	95% DESIGN REVIEW WEEKLY UPDATE SUBMITTAL	SDN						
1	10/05/09	95% DESIGN FINAL	SDN						
2	07/10/09	DRB COMMENTS INCORPORATED	SDN						

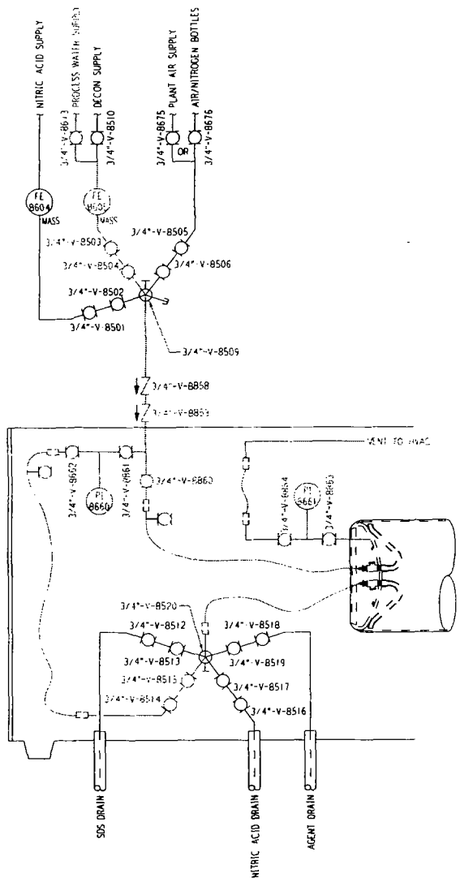

GA TC PROCESSING STEP 4:
TC RINSE (STEP 4 AND 5 REPEATED 3 TIMES FOR TRIPLE RINSE)

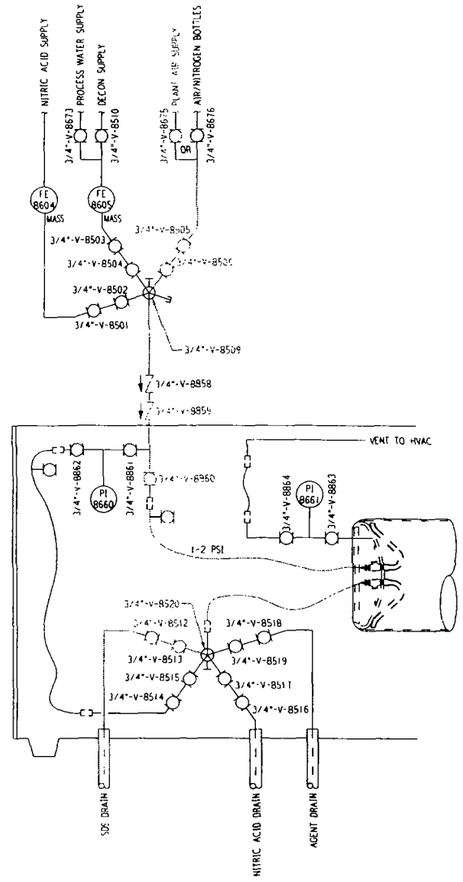

GA TC PROCESSING STEP 5:
TC RINSE DRAIN (STEP 4 AND 5 REPEATED 3 TIMES FOR TRIPLE RINSE)

Symbol	Description	Date	Approved
2	ISSUED FOR CONSTRUCTION		
1	95% DESIGN FINAL		
0C	95% DESIGN REVIEW COMMENTS		
0B	50% DESIGN FINAL		
0A	50% DESIGN REVIEW COMMENTS		

Revisions

DEPARTMENT OF THE ARMY
PROGRAM MANAGER FOR
CHEMICAL DEMILITARIZATION
ABERDEEN PROVING GROUND, MARYLAND

US ARMY ENGINEER DISTRICT SACRAMENTO
CORPS OF ENGINEERS
SACRAMENTO, CALIFORNIA

EG&G A Division of URS

US Army Corps of Engineers

TOOELE ARMY DEPOT
TOOELE, UTAH

CHEMICAL STOCKPILE DISPOSAL PROGRAM
AREA 10 LIQUID INCINERATOR (ATLIC)
GA TO TC GLOVEBOX
PROCESSING FLOW DIAGRAM

Drawn by: SD NICHOLES	Date: 04/10/09			
Checked by:	EG&G Approved:	Scale: NO SCALE	Sheet reference number: EG-22-F-8210	EG&G Contract No. DACA87-89-C-0076
Engineer:	PMCD Mgr. Concur: N/A			Sheet 2 of 2 / Rev. 2

UNCONTROLLED COPY - UNLESS STAMPED OTHERWISE BY DCC[1]

UNCONTROLLED COPY - UNLESS STAMPED OTHERWISE BY DCC

DRAWING STATUS									
NO	DATE	REVISION DESCRIPTION	DRAWN	NA	PROJ ENGR	CHIEF ENGR	LEAD ENGR	PROJ MGR	DCC MGR
OAa	04/16/09	50% DESIGN REVIEW WEEKLY UPDATE SUBMITTAL	SDN						
OB	4/10/09	50% DESIGN FINAL	SDN						
OCa	06/21/09	95% DESIGN REVIEW WEEKLY UPDATE SUBMITTAL	SDN						
1	10/05/09	95% DESIGN FINAL	SDN						
2	12/18/09	DRB COMMENTS INCORPORATED	SDN						

REFERENCE DRAWINGS:

EG-22-D-8212 AREA 10 GA/LEWISITE PROCESSING FACILITY GLOVEBOX 8501 P&ID
EG-22-D-8213 AREA 10 GA/LEWISITE PROCESSING FACILITY GLOVEBOX 8502 P&ID

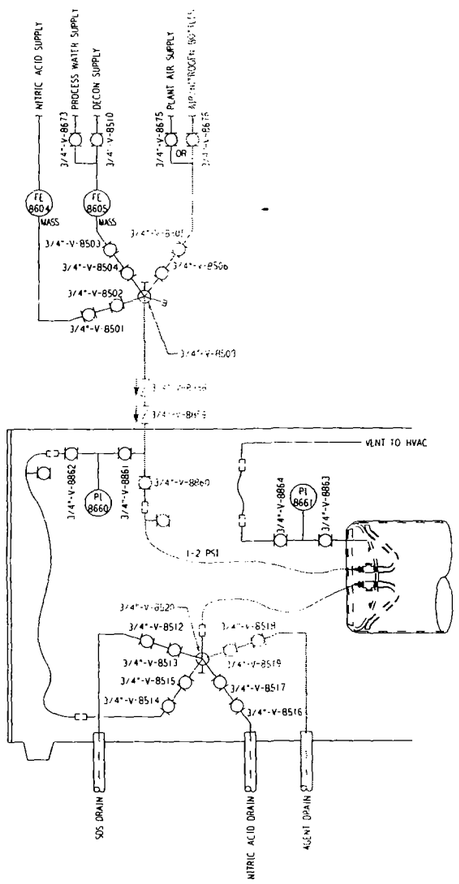

LEWISITE TC PROCESSING STEP 1:
DRAIN OF LEWISITE AGENT FROM TC

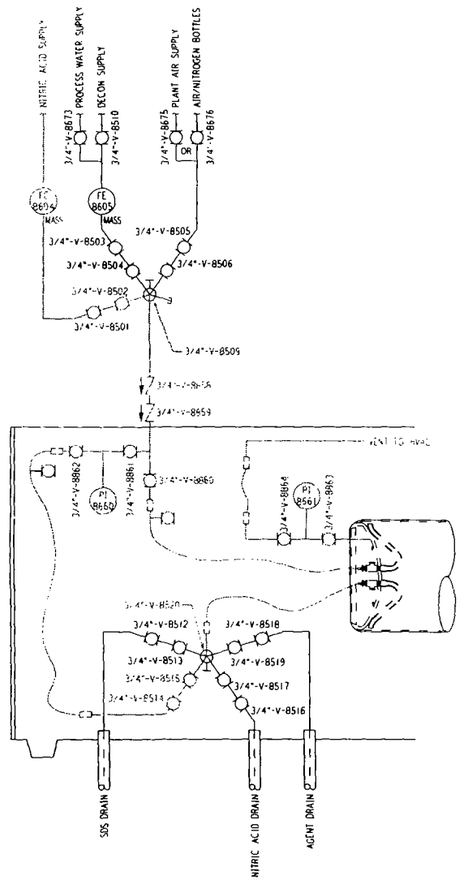

LEWISITE TC PROCESSING STEP 2:
TC NITRIC ACID RINSE (WATER)

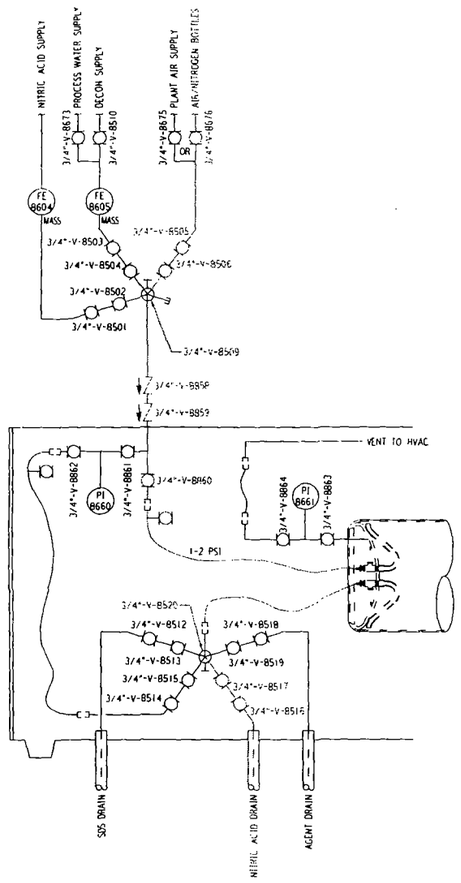

LEWISITE TC PROCESSING STEP 3:
DRAIN OF NITRIC ACID RINSE FROM TC

Symbol	Description	Date	Approved
2	ISSUED FOR CONSTRUCTION		
1	95% DESIGN FINAL		
OC	95% DESIGN REVIEW COMMENTS		
OB	50% DESIGN FINAL		
OA	50% DESIGN REVIEW COMMENTS		

Revisions

DEPARTMENT OF THE ARMY
PROGRAM MANAGER FOR
CHEMICAL DEMILITARIZATION
ABERDEEN PROVING GROUND, MARYLAND

US ARMY ENGINEER DISTRICT SACRAMENTO
CORPS OF ENGINEERS
SACRAMENTO, CALIFORNIA

EG&G A Division of URS

US Army Corps of Engineers

TOOELE ARMY DEPOT
TOOELE, UTAH

CHEMICAL STOCKPILE DISPOSAL PROGRAM
AREA 10 LIQUID INCINERATOR (ATLIC)
LEWISITE TC GLOVEBOX

PROCESSING FLOW DIAGRAM

Drawn by: SD NICHOLES	Date: 04/10/09			
Checked by:	EG&G Approved:	Scale:	Sheet reference number:	EG&G Contract No. DACA87-89-C-0076
Engineer:	PMCD Mgr. Concur: N/A	NO SCALE	EG-22-F-8211	Sheet 1 of 2 — Rev. 2

UNCONTROLLED COPY - UNLESS STAMPED OTHERWISE BY DCC

2 UNCONTROLLED COPY - UNLESS STAMPED OTHERWISE BY DCC[1]

DRAWING STATUS									
NO	DATE	REVISION DESCRIPTION	DRAWN	CHK	PROJ ENGR	PROJ ENGR	PD MGR	PROJ MGR	PD MGR
0A0	04/16/09	50% DESIGN REVIEW WEEKLY UPDATE SUBMITTAL	SDN						
0B	06/16/09	50% DESIGN FINAL	SDN						
0C0	08/21/09	95% DESIGN REVIEW WEEKLY UPDATE SUBMITTAL	SDN						
1	10/05/09	95% DESIGN FINAL	SDN						
2	12/18/09	DRB COMMENTS INCORPORATED	SDN						

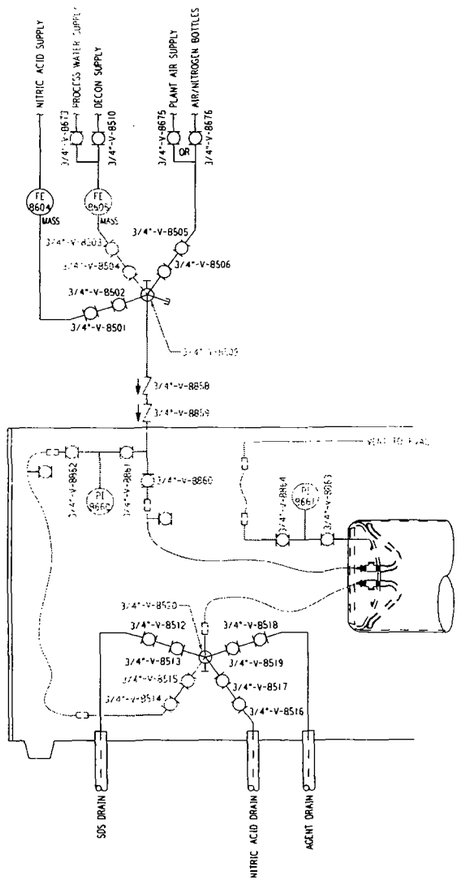

LEWISITE TC PROCESSING STEP 4:
TC WATER RINSE (STEP 4 AND 5 REPEATED 3 TIMES FOR TRIPLE RINSE)

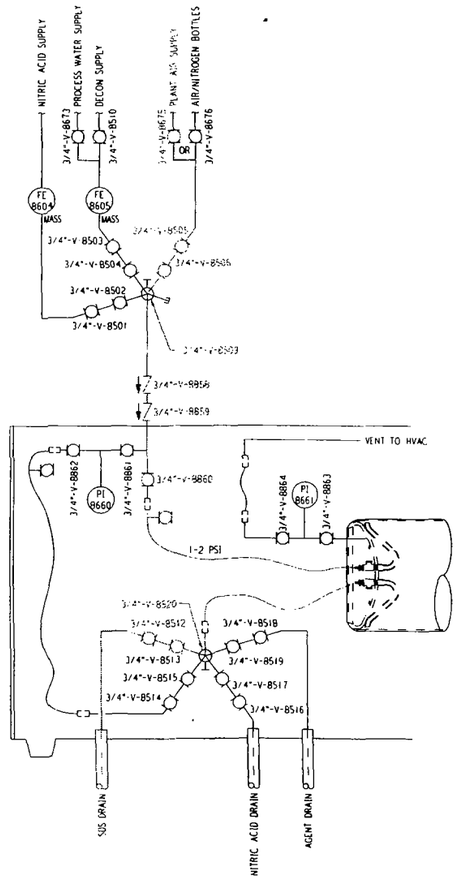

LEWISITE TC PROCESSING STEP 5:
TC RINSE DRAIN (STEP 4 AND 5 REPEATED 3 TIMES FOR TRIPLE RINSE)

Symbol	Description	Date	Approved
2	ISSUED FOR CONSTRUCTION		
1	95% DESIGN FINAL		
0C	95% DESIGN REVIEW COMMENTS		
0B	50% DESIGN FINAL		
0A	50% DESIGN REVIEW COMMENTS		

Revisions

DEPARTMENT OF THE ARMY
PROGRAM MANAGER FOR
CHEMICAL DEMILITARIZATION
ABERDEEN PROVING GROUND, MARYLAND

US ARMY ENGINEER DISTRICT SACRAMENTO
CORPS OF ENGINEERS
SACRAMENTO, CALIFORNIA

EG&G A Division of URS

US Army Corps of Engineers

TOOELE ARMY DEPOT
TOOELE, UTAH

CHEMICAL STOCKPILE DISPOSAL PROGRAM
AREA 10 LIQUID INCINERATOR (ATLIC)
LEWISITE TC GLOVEBOX
PROCESSING FLOW DIAGRAM

Drawn by:	Date:	Scale:	Sheet reference number:	EG&G Contract No.
SD NICHOLES	04/10/09	NO SCALE	EG-22-F-8211	DACA87-89-C-0076
Checked by:	EG&G Approved:			Sheet 2 of 2
Engineer:	PMCD Mgr. Concur: N/A			Rev. 2

2 UNCONTROLLED COPY - UNLESS STAMPED OTHERWISE BY DCC[1]

UNCONTROLLED COPY - UNLESS STAMPED OTHERWISE BY DCC

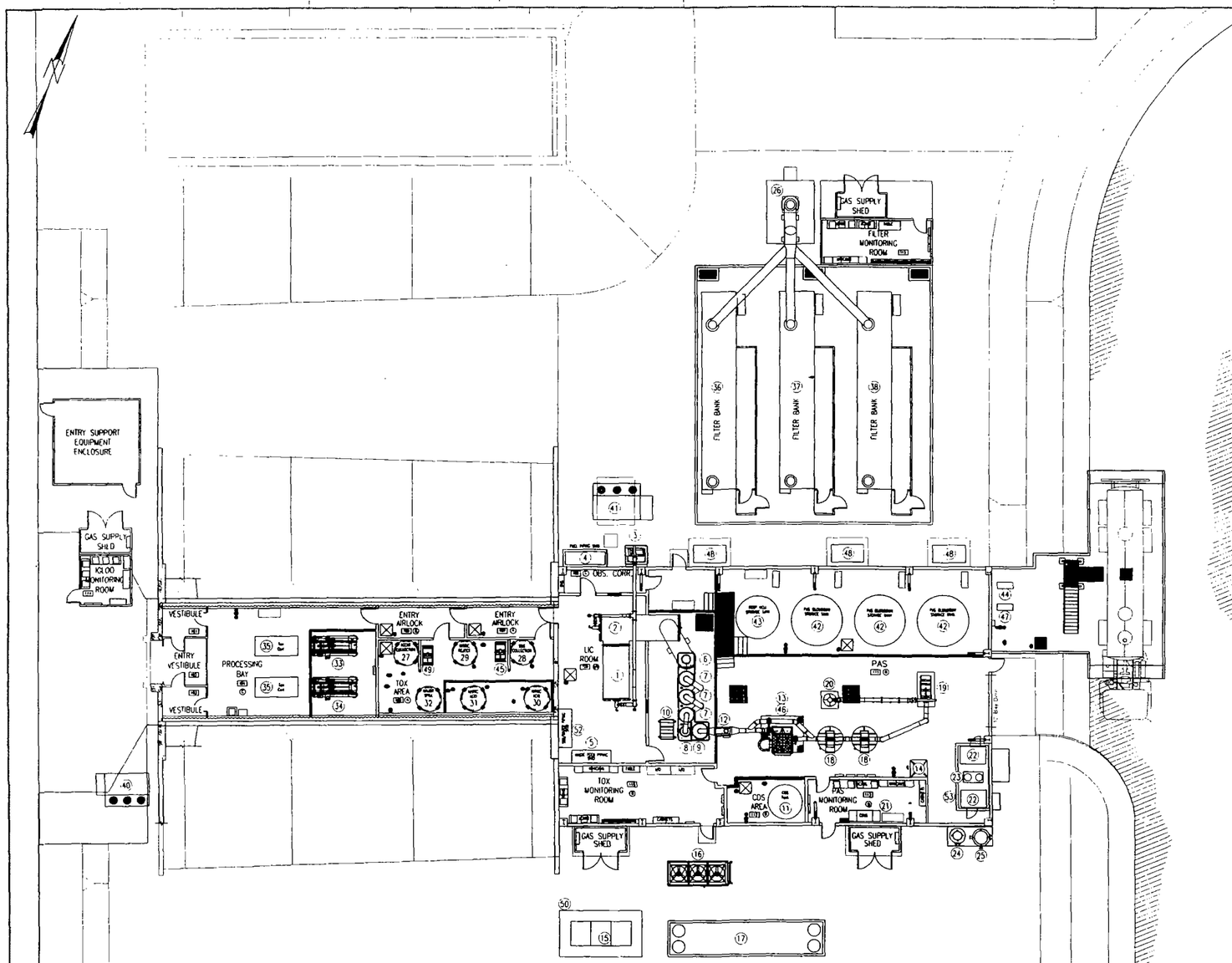

DRAWING STATUS

NO	DATE	REVISION DESCRIPTION	DRAWN	CHK	PROJ ENG	PROJ MGR	CONST ENG	CONST MGR	PROJ MGR	DIR CONST MGR
1	10/14/09	ISSUED FOR CONSTRUCTION	RDL							
2	12/10/09	DRB COMMENTS INCORPORATED	SDN							

EQUIPMENT LEGEND

ITEM	QTY	DESCRIPTION	EQUIPMENT NUMBER
1	1	FURNACE PRIMARY CHAMBER	LIC-FURN-8101
2	1	FURNACE SECONDARY CHAMBER	LIC-FURN-8102
3	1	COMBUSTION AIR BLOWER/SKID	LIC-BLOW-8430/SKID A1005
4	1	FUEL PIPING SKID	SKID A1006
5	1	WASTE FEED PIPING SKID	SKID A1016
6	1	FURNACE EXHAUST QUENCH TOWER	PAS-TWR-8901
7	3	PACKED BED SCRUBBER TOWER	PAS-TWR-8902,8903,8904
8	1	EDUCTOR VENTURI SCRUBBER	PAS-VTR-8905
9	1	DEMISTER VESSEL	PAS-DMS-8906
10	1	SCRUBBER PUMPS	PAS-PUMP-8908,8909,8910
11	1	CENTRAL DECON HOLDING TANK	CDS-TANK-8535
12	1	EXHAUST GAS ELECTRIC RE-HEATER	PAS-HEAT-8926
13	1	PAS AIRLOCK ROTARY DISCHARGE	PAS-RAL-8928
14	1	CARBON STORAGE AND FEED/BLOWER	PAS-BRU-8621/PAS-BLOW-8925
15	1	PAS WATER CHILLER	PAS-CHIL-8976
16	1	PAS LIQUID COOLER	PAS-HX-8972
17	1	AIR-COOLED CONDENSER	PAS-COND-8975
18	2	CARBON FILTER UNIT	PAS-FLT-8941 & 8942
19	1	I.D. FAN	PAS-BLOW-8943
20	1	EXHAUST STACK	PAS-STAK-8944
21	1	CEMS SYSTEM	
22	2	AIR COMPRESSOR	PLA-COMP-8354 & 8357
23	1	COMPRESSED AIR DRYER	PLA-DRY-8362
24	1	INSTRUMENT AIR RECEIVER	MS-RECV-8370
25	1	PLANT AIR RECEIVER	PLA-RECV-8360
26	1	EXHAUST STACK	HVC-STAK-8443
27	1	AGENT COLLECTION TANK	LCS-TANK-8511
28	1	SPENT DECON HOLDING TANK	SDS-TANK-8523
29	1	NITRIC REJECT HOLDING TANK	NSF-TANK-8514
30	1	NITRIC ACID COLLECTION TANK	LCS-TANK-8516
31	1	NITRIC ACID HOLDING TANK	NSF-TANK-8518
32	1	MAJOR SPILL COLLECTION TANK	LCS-TANK-8534
33	1	AGENT COLLECTION GLOVE BOX	AGB-GLBX-8501
34	1	AGENT COLLECTION GLOVE BOX	AGB-GLBX-8502
35	2	INPUT CARTS	
36	1	HVAC CARBON FILTER UNITS	HVC-FILT-8441
37	1	HVAC CARBON FILTER UNITS	HVC-FILT-8363
38	1	HVAC CARBON FILTER UNITS	HVC-FILT-8364
39	1	ELECTRICAL EQUIPMENT ENCLOSURE	
40	1	AIR HANDLER - IGLOO	HVC-AHH-8353
41	1	AIR HANDLER- LIC	HVC-AHH-8357
42	3	PAS BLOWDOWN STORAGE TANKS	PAS-TANK-8551,8552,8553
43	1	NITRIC WASTE STORAGE TANK	PAS-TANK-8568
44	1	PAS BLOWDOWN LOADING PUMP	PAS-PUMP-8550
45	1	SDS FEED SKID/PUMPS	A1018/SDS-PUMP-8530, 8540
46	1	PAS FILTER BAGHOUSE	PAS-FILT-8927
47	1	CENTRAL DECON LOADING PUMP	CDS-PUMP-8536
48	3	HVAC EVAP COOLER	HVC-EVAP-8570,8571,8572
49	1	WASTE FEED SKID/PUMPS	A1015/WFS-PUMP-8655,8656
50	1	PAS PUMP	PAS-PUMP-8977
51	2	EMERGENCY GENERATORS	GEN-GENR-8001, 8002
52	1	SDS/WATER PIPING SKID	SKID A1019
53	1	AIR COMPRESSOR SKID	SKID A1025

10' 5' 0 10' 20'

Symbol	Description	Date	Approved
2	ISSUED FOR CONSTRUCTION		
1	ISSUED FOR CONSTRUCTION		

Revisions

DEPARTMENT OF THE ARMY
PROGRAM MANAGER FOR
CHEMICAL DEMILITARIZATION
ABERDEEN PROVING GROUND, MARYLAND

US ARMY ENGINEER DISTRICT SACRAMENTO
CORPS OF ENGINEERS
SACRAMENTO, CALIFORNIA

EG&G A Division of URS

US Army Corps of Engineers

TOOELE ARMY DEPOT
TOOELE, UTAH

CHEMICAL STOCKPILE DISPOSAL PROGRAM
AREA 10 LIQUID INCINERATOR (ATLIC)
SITE

GENERAL ARRANGEMENT PLAN

Drawn by: DG	Date: 01/20/09		
Checked by: RDL	EG&G Approved:	Scale: NO SCALE	Sheet reference number: EG-22-G-8204
Engineer:	PMCD Mgr. Concur: N/A		

EG&G Contract No. DAC87-89-C-0076

Sheet 1 of 1 | Rev. 2

NOTE: THE IGLOO IS A PREEXISTING STRUCTURE PROVIDED BY EG&G; ALL MODIFICATIONS SHOWN (FOUNDATION, SUMPS, WALLS, PAINT, ETC.) ARE TO BE PERFORMED BY THE SUBCONTRACTOR. THE PREFABRICATED ENVIRONMENTAL CONTROL SYSTEM WILL BE PROVIDED BY EG&G; ERECTION AND MODIFICATIONS (FOUNDATION, SUMPS, WALLS, PAINT, ETC.) ARE TO BE PERFORMED BY THE SUBCONTRACTOR. THE PAS STACK WILL BE PROVIDED BY EG&G; INSTALLATION IS TO BE PERFORMED BY THE SUBCONTRACTOR. THE THREE HVAC FILTER BANKS WILL BE PROVIDED BY EG&G; INSTALLATION IS TO BE PERFORMED BY THE SUBCONTRACTOR. THE CONTROL CENTER EQUIPMENT ENCLOSURE, EMERGENCY GENERATOR ENCLOSURE, AND ELECTRICAL EQUIPMENT ENCLOSURE WILL BE PROVIDED AND INSTALLED BY EG&G. ALL OTHER ITEMS (WALLS, FOUNDATIONS, NEW UN-NAMED ROADS, STRUCTURAL SUPPORTS, ETC.) ARE TO BE SUPPLIED AND INSTALLED BY THE SUBCONTRACTOR.

UNCONTROLLED COPY - UNLESS STAMPED OTHERWISE BY DCC

UNCONTROLLED COPY - UNLESS STAMPED OTHERWISE BY DCC

DRAWING STATUS										
NO	DATE	REVISION DESCRIPTION	DRAWN	APP	PROJ ENGR	CONTR ENGR	IBR ENGR	PROJ MGR	DATE
OGc	07/20/09	95% WEEKLY REVIEW UPDATE	RDL						
OGb	07/30/09	95% WEEKLY REVIEW UPDATE	RDL						
OHa	09/01/09	95% DESIGN REVIEW WEEKLY UPDATE SUBMITTAL	SDN						
OJ	09/29/09	95% DESIGN FINAL	DLP						
2	12/12/09	DRB COMMENTS INCORPORATED	SDN						

NOTES:

1. ALL EQUIPMENT, INSTRUMENTS AND VALVE TAG NUMBERS ARE PREFIXED WITH 810.
2. SEE DRAWING EG-22-G-1000 SHT. 2 FOR COMPLETE MONITORING INFORMATION. SYSTEMS PROVIDED BY OTHERS.
3. DUCT PRESSURE CLASS: +/- 15" W.C.
4. ROOM PRESSURES INDICATED ARE RELATIVE TO ATMOSPHERE AND ARE DESIGN VALUES.
5. AIRFLOW RATES INDICATED ARE NOMINAL CFM AND ARE DESIGN VALUES.
6. ALL HVAC DUCTING, INSTRUMENTS AND VALVING ASSOCIATED WITH AGB-GLBX-8501 FROM THE INLET OF HVC-FILT-8412 UPTO AND INCLUDING XV-8314 TO BE PROVIDED AND INSTALLED ON THE GLOVEBOX BY EG&G. SUBCONTRACTOR RESPONSIBLE FOR INSTALLATION OF GLOVEBOX AND FINAL CONNECTIONS TO FACILITY HVAC SYSTEM.
7. ALL HVAC DUCTING, INSTRUMENTS AND VALVING ASSOCIATED WITH AGB-GLBX-8502 FROM THE INLET OF HVC-FILT-8422 UPTO AND INCLUDING XV-8315 TO BE PROVIDED AND INSTALLED ON THE GLOVEBOX BY EG&G. SUBCONTRACTOR RESPONSIBLE FOR INSTALLATION OF GLOVEBOX AND FINAL CONNECTIONS TO FACILITY HVAC SYSTEM.
8. ALL OTHER HVAC DUCTING, INSTRUMENTS AND VALVING SHOWN ON THIS DRAWING TO BE PROVIDED AND INSTALLED BY THE SUBCONTRACTOR.

INTERLOCK I/O

I-10: DAMPER CAN NOT OPEN FROM INPUT PRESSURE SWITCHES WHEN HANDSWITCH IS ACTIVE.

I-11: DAMPER CAN NOT BE OPENED UNLESS RESPECTIVE FAN IS STARTED.

I-12: ISOLATION DAMPERS ARE INTERLOCKED FROM OPENING UNTILL AT LEAST ONE FILTER IS OPERATING.

I-13: FAN CAN NOT BE STARTED UNTIL AT LEAST ONE FILTER BANK IS OPERATING.

INTERLOCK LEGEND:

I-10 = OPEN PRESSURE RELIEF DAMPER

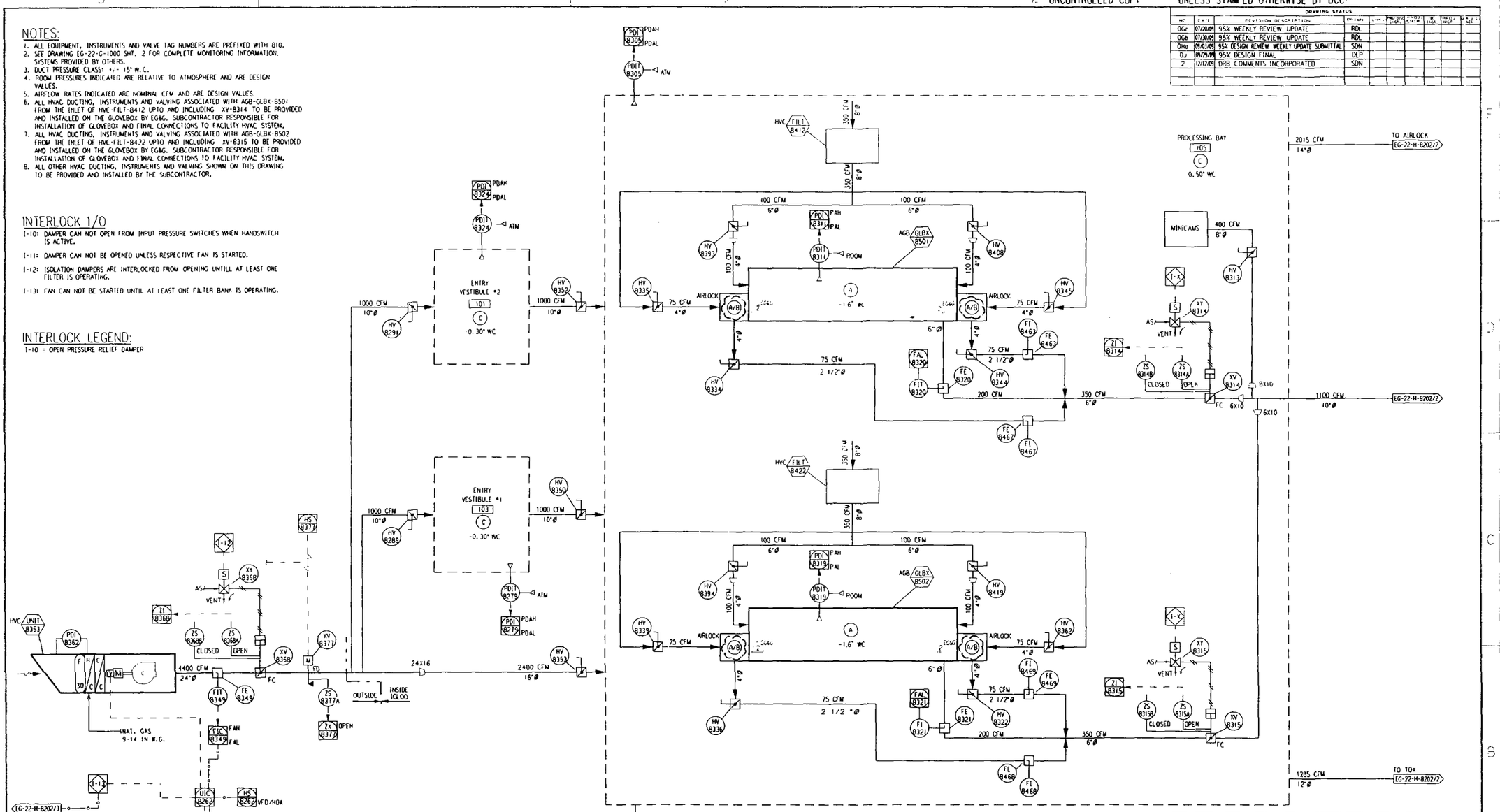

HVC-AIRH-8353
IGLOO AIR HANDLER
4400 CFM
1.01 BHP
1.5 HP MOTOR
TSP : .027 W.C.
15.8 TONS COOLING
364 MBTUH HEATING

Symbol	Description	Date	Approved
2	ISSUED FOR CONSTRUCTION		
1	95% DESIGN FINAL		
OH	95% DESIGN REVIEW COMMENTS		
OG	95% DESIGN REVIEW COMMENTS	07/20/09	
OFb	50% DESIGN FINAL	06/23/09	
OFa	50% DESIGN FINAL	06/05/09	
OF	50% DESIGN FINAL	05/21/09	
OE	50% DESIGN REVIEW COMMENTS	03/30/09	

Revisions

DEPARTMENT OF THE ARMY
PROGRAM MANAGER FOR
CHEMICAL DEMILITARIZATION
ABERDEEN PROVING GROUND, MARYLAND

US ARMY ENGINEER DISTRICT SACRAMENTO
CORPS OF ENGINEERS
SACRAMENTO, CALIFORNIA

EG&G A Division of URS

US Army Corps of Engineers

TOOELE ARMY DEPOT
TOOELE, UTAH

CHEMICAL STOCKPILE DISPOSAL PROGRAM
AREA 10 LIQUID INCINERATOR (ATLIC)
HVAC
P&I D

Drawn by:	Date:			
Checked by:	EG&G Approved:	Scale:	Sheet reference number:	EG&G Contract No. DACA87-89-C-0076
Engineer:	PMCD Mgr. Concur: N/A	NO SCALE	EG-22-H-8202	Sheet 1 of 3 — Rev. 2

UNCONTROLLED COPY - UNLESS STAMPED OTHERWISE BY DCC

UNCONTROLLED COPY - UNLESS STAMPED OTHERWISE BY DCC

DRAWING STATUS								
NO.	DATE	REVISION DESCRIPTION	DRAWN	CHK	PROJ MGR	PROJ ENGR	LEAD ENGR	PROJ MGR	P.E. MGR
OGa	07/20/09	95% WEEKLY REVIEW UPDATE	RDL						
OGb	07/30/09	95% WEEKLY REVIEW UPDATE	RDL						
OHa	09/03/09	95% DESIGN REVIEW WEEKLY UPDATE SUBMITTAL	SDN						
1	09/29/09	95% DESIGN FINAL	DLP						
2	12/18/09	DRB COMMENTS INCORPORATED	SDN						

NOTES.

1. ALL EQUIPMENT, INSTRUMENTS AND VALVE TAG NUMBERS ARE PREFIXED WITH B10.
2. SEE DRAWING EG-22-G-1000 SHT. 2 FOR COMPLETE MONITORING INFORMATION. SYSTEMS PROVIDED BY OTHERS.
3. DUCT PRESSURE CLASS: +/- 15" W.C.
4. ROOM PRESSURES INDICATED ARE RELATIVE TO ATMOSPHERE AND ARE DESIGN VALUES.
5. AIRFLOW RATES INDICATED ARE NOMINAL CFM AND ARE DESIGN VALUES.
6. ALL EQUIPMENT ON THE DRAWING IS SUPPLIED AND INSTALLED BY SUBCONTRACTOR.

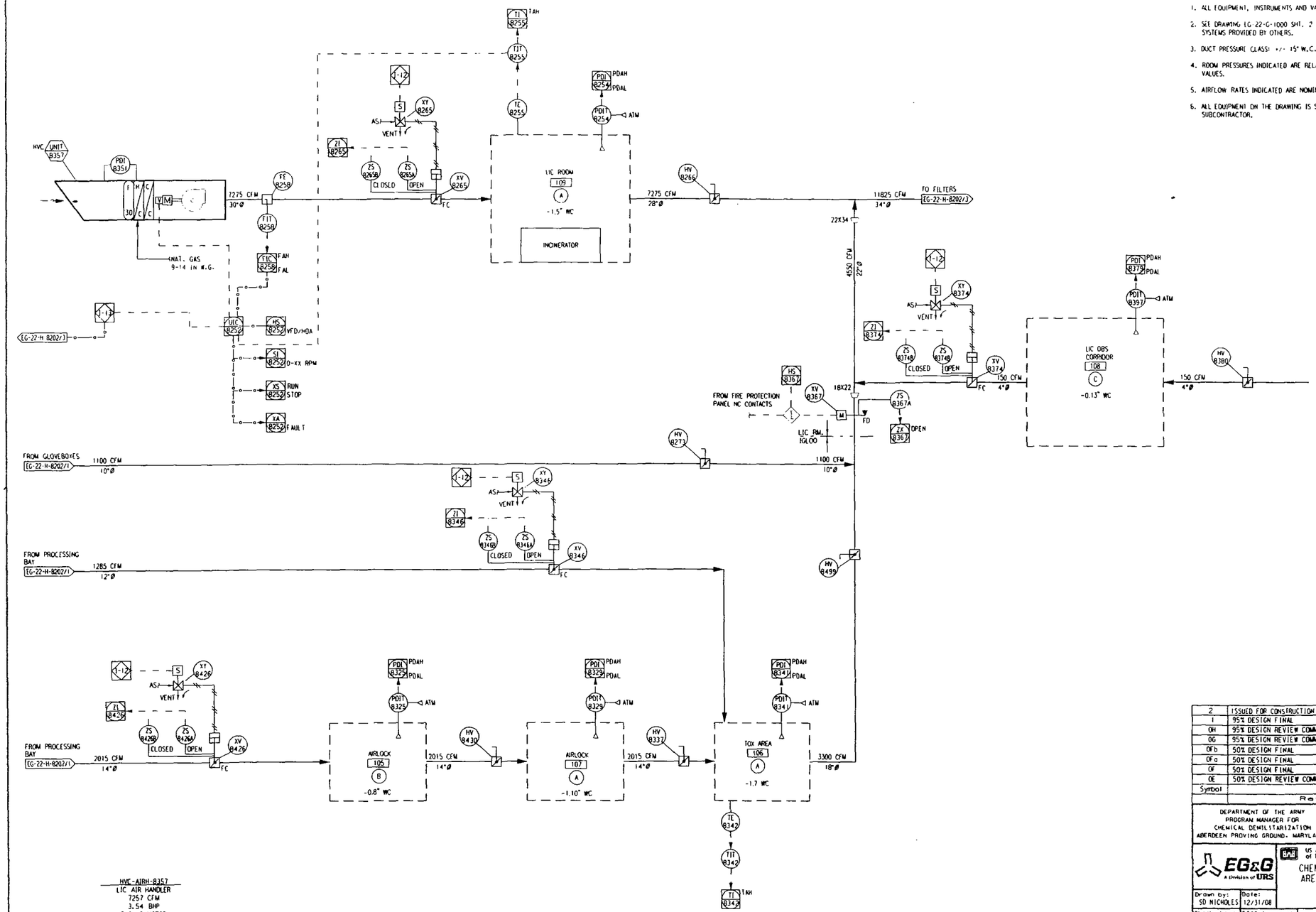

HVC-AIRH-8357
LIC AIR HANDLER
7257 CFM
3.54 BHP
5.0 HP MOTOR
TSP = 0.77 W.C.
24.5 TONS COOLING
509 MBTUH HEATING

Symbol	Description	Date	Approved
2	ISSUED FOR CONSTRUCTION		
1	95% DESIGN FINAL		
OH	95% DESIGN REVIEW COMMENTS		
OG	95% DESIGN REVIEW COMMENTS	07/20/09	
OFb	50% DESIGN FINAL	06/23/09	
OFa	50% DESIGN FINAL	06/05/09	
OF	50% DESIGN FINAL	05/21/09	
OE	50% DESIGN REVIEW COMMENTS	03/30/09	

Revisions

DEPARTMENT OF THE ARMY
PROGRAM MANAGER FOR
CHEMICAL DEMILITARIZATION
ABERDEEN PROVING GROUND, MARYLAND

US ARMY ENGINEER DISTRICT SACRAMENTO
CORPS OF ENGINEERS
SACRAMENTO, CALIFORNIA

EG&G A Division of URS

US Army Corps of Engineers

TOOELE ARMY DEPOT
TOOELE, UTAH

CHEMICAL STOCKPILE DISPOSAL PROGRAM
AREA 10 LIQUID INCINERATOR (ATLIC)
HVAC
P&I D

Drawn by:	Date:	Checked by:	EG&G Approved:	Scale:	Sheet reference number:	EG&G Contract No.
SD NICHOLES	12/31/08	Engineer:	PMCD Mgr. Concur: N/A	NO SCALE	EG-22-H-8202	DACA87-89-C-0076

Sheet 2 of 3 Rev. 2

UNCONTROLLED COPY - UNLESS STAMPED OTHERWISE BY DCC

UNCONTROLLED COPY - UNLESS STAMPED OTHERWISE BY DCC

NOTES:

1. ALL EQUIPMENT, INSTRUMENTS AND VALVE TAG NUMBERS ARE PREFIXED WITH 810
2. SEE DRAWING EG-22-G-1000 SHT. 2 FOR COMPLETE MONITORING INFORMATION FOR THE MIMICAWS DIAGRAM. SYSTEMS PROVIDED BY OTHERS
3. DUCT PRESSURE CLASS: +/- 15" W.C.
4. 810-PSL-8267 IS ACTUALLY TWO PRESSURE SWITCHES CONSISTING OF 810-PSL-8267B THAT CLOSES AT -7.2" W.C. FAILING TO OPEN THE VACUUM RELIEF DAMPER (810-PV-8270) AND AN INDEPENDENT RESET SWITCH (810-PSL-8267A) THAT OPENS AT -4.5" W.C. PRIOR ALLOWS THE VACUUM RELIEF DAMPER (810-PV-8270) TO CLOSE. THE ACTIONS OF 810-PSL-8267 OVERRIDES THE ACTION OF THE CONTROL SYSTEM (810-HS-8270A)
5. HAND SWITCH 76-HS-8267 DISABLES THE ACTION OF 76-PSL-8267 WHEN IN THE OFF POSITION TO ALLOW CALIBRATION OR MAINTENANCE OF 76-PSL-8267 SWITCHES
6. ROOM PRESSURES INDICATED ARE RELATIVE TO ATMOSPHERE AND ARE DESIGN VALUES.
7. AIRFLOW RATES INDICATED ARE NOMINAL CFM AND ARE DESIGN VALUES.
8. EQUIPMENT ASSOCIATED WITH THE FILTER UNITS, FROM INLET VALVE (XV-8465, 8272, 8278) TO OUTLET VALVE (XV-8489, 8290, 8298) ARE SUPPLIED BY EG&G AND INSTALLED BY SUBCONTRACTOR. ALL OTHER EQUIPMENT (PIPING, SUPPORTS, AND STACK) IS PROCURED AND INSTALLED BY THE SUBCONTRACTOR.

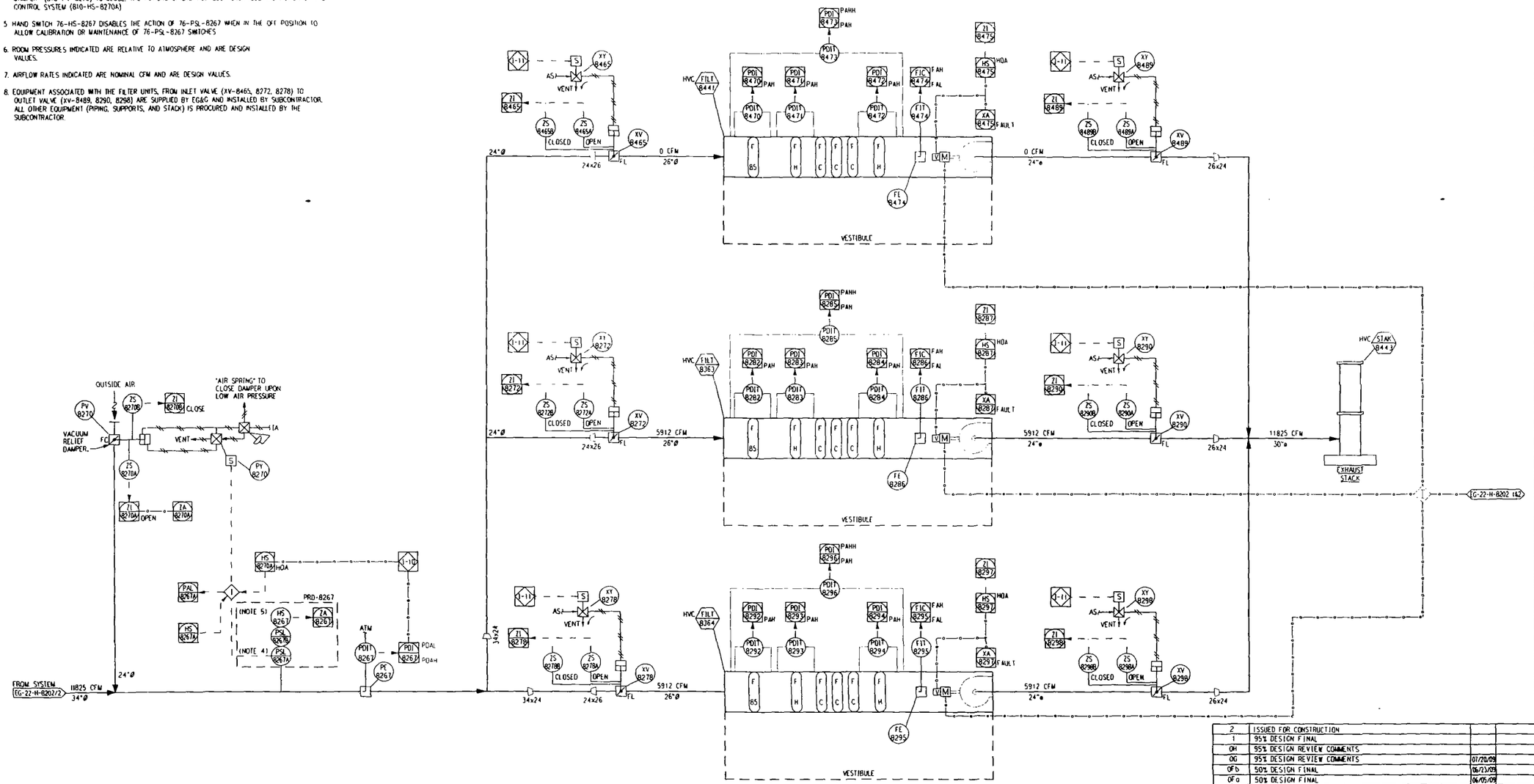

DRAWING STATUS									
NO	DATE	DESCRIPTION	DR. BY	CHK	PROJ ENGR	CHK	PROJ MGR	CHK	PROJ MGR
OGa	07/20/09	95% WEEKLY REVIEW UPDATE	RDL						
OGb	07/30/09	95% WEEKLY REVIEW UPDATE	RDL						
OHa	09/03/09	95% DESIGN REVIEW WEEKLY UPDATE SUBMITTAL	SDN						
1	09/25/09	95% DESIGN FINAL	DLP						
2	12/18/09	DRB COMMENTS INCORPORATED	SDN						

Revisions			
2	ISSUED FOR CONSTRUCTION		
1	95% DESIGN FINAL		
OH	95% DESIGN REVIEW COMMENTS		
OG	95% DESIGN REVIEW COMMENTS	07/20/09	
OFb	50% DESIGN FINAL	06/23/09	
OFa	50% DESIGN FINAL	06/05/09	
OF	50% DESIGN FINAL	05/21/09	
OE	50% DESIGN REVIEW COMMENTS	01/30/09	
Symbol	Description	Date	Approved

DEPARTMENT OF THE ARMY
PROGRAM MANAGER FOR
CHEMICAL DEMILITARIZATION
ABERDEEN PROVING GROUND, MARYLAND

US ARMY ENGINEER DISTRICT SACRAMENTO
CORPS OF ENGINEERS
SACRAMENTO, CALIFORNIA

EG&G A Division of URS

US Army Corps of Engineers

TOOELE ARMY DEPOT
TOOELE, UTAH

CHEMICAL STOCKPILE DISPOSAL PROGRAM
AREA 10 LIQUID INCINERATOR (ATLIC)
HVAC
P&ID

Drawn by: SD NICHOLES	Date: 12/31/08			
Checked by:	EG&G Approved:	Scale: NO SCALE	Sheet reference number: EG-22-H-8202	EG&G Contract No. DACA87-89-C-0016
Engineer:	PMCD Mgr. Concur: N/A			Sheet 3 of 3 / Rev. 2

UNCONTROLLED COPY - UNLESS STAMPED OTHERWISE BY DCC