A01-0489.1

USA CAMDS ACTIVITY

TEST REPORT

FOR

CHEMICAL AGENT (VX, GB, AND HD) 5X DECONTAMINATION VERIFICATION

TEST REPORT NO. 32-57a*
MARCH 1996

WOODROW T. LASH
GAIL L. A. BOWERS-IRONS (REDCON)

* This Test Report supersedes USACAMDS Test Report No. 32-57 dated 25 October 1994

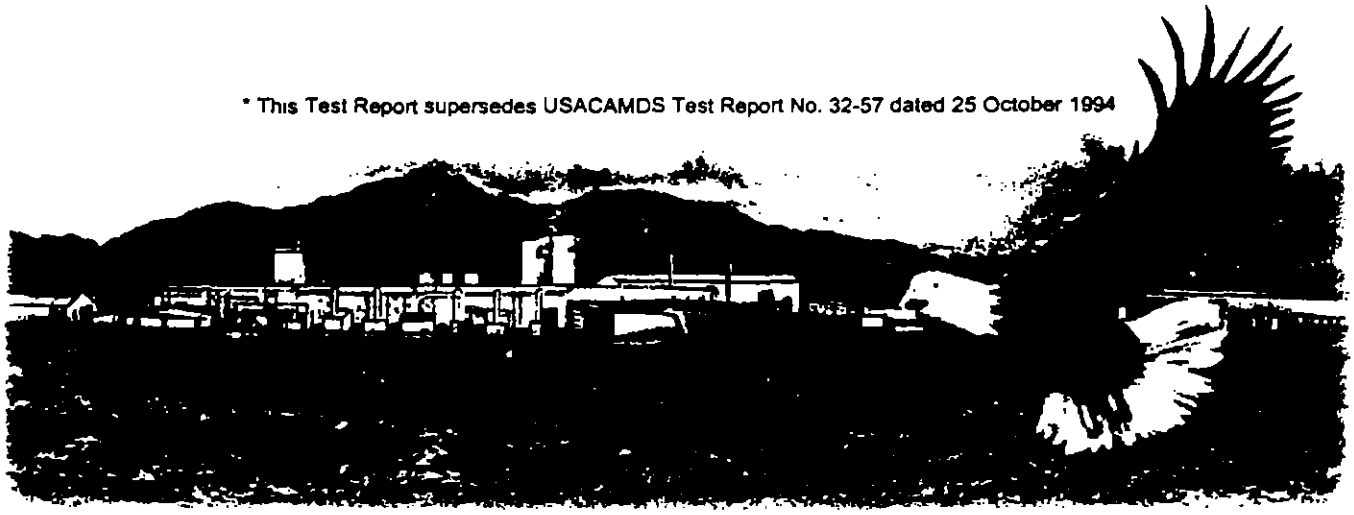

CHEMICAL AGENT MUNITIONS DISPOSAL SYSTEM
TOOELE ARMY DEPOT - TOOELE, UTAH 84074

9236

TEST REPORT

FOR

CHEMICAL AGENT (VX, GB, AND HD) 5X DECONTAMINATION VERIFICATION

TEST REPORT 32-57a*
MARCH 1996

WOODROW T. LASH
GAIL L. A. BOWERS-IRONS

UNITED STATED ARMY
CHEMICAL AGENT MUNITIONS DISPOSAL SYSTEM ACTIVITY
TOOELE ARMY DEPOT
TOOELE, UTAH 84074

*This Test Report supersedes USACAMDS Test Report No. 32-57 dated 25 October 1994

TEST REPORT

FOR

CHEMICAL AGENT (VX, GB, AND HD) 5X DECONTAMINATION VERIFICATION

TEST REPORT 32-57a*

SUBMITTED BY:

Woodrow T. Lash	29 Feb 96	Gail L. Bowers-Irons	2-26-96
WOODROW T. LASH Chemist, Analytical Branch	DATE	GAIL L. A. BOWERS-IRONS Technical Writer (REDCON)	DATE

CONCURRENCES:

Joe M. Stilinovich	29 Feb 96	Dennis W. Grieder	2-28-96
JOE M. STILINOVICH Chief, Documentation Branch	DATE	DENNIS W. GRIEDER Chief, Engineering Division	DATE
Dallen Cox	29 Feb 96	Don E. Barclay	3-21-96
DALLEN COX Chief, Analytical Branch	DATE	DON BARCLAY Chief, Sfty. QA/QC, Env. Division	DATE
Steven Mallen	04 Mar 96	Doyle G. Davis	3/26/96
STEVEN C. MALLEN Chief, Laboratory Support Division	DATE	DOYLE G. DAVIS Deputy Systems Manager	DATE

APPROVED BY:

Don W. Killgore	26 Mar 96
DON W. KILLGORE LTC, CMLC Systems Manager	DATE

DOCUMENT TITLE: Chem. Agent 5x Decon Verification

	Change/Rev.	Entered By	Date
Initial Document	Mar. 96	Zug	Aug. 96

TEST REPORT

FOR

CHEMICAL AGENT (VX, GB, AND HD) 5X DECONTAMINATION VERIFICATION

TEST REPORT 32-57a*

TABLE OF CONTENTS

	PAGE NO
EXECUTIVE SUMMARY	v
SECTION I. INTRODUCTION	1
1. BACKGROUND	1
2. OBJECTIVES	1
SECTION II. TEST PROCEDURES AND RESULTS	2
1. TEST PROCEDURES	2
2. TEST RESULTS	7
SECTION III. CONCLUSIONS	12
APPENDIX A. MATERIALS AND PROTOCOLS	A
APPENDIX B. TABLES	B
APPENDIX C. FIGURES	C
APPENDIX D. ABBREVIATION, ACRONYMS, AND DEFINITIONS	D
APPENDIX E. REFERENCES	E

TEST REPORT

FOR

CHEMICAL AGENT (VX, GB, AND HD) 5X DECONTAMINATION VERIFICATION

TEST REPORT 32-57a*

EXECUTIVE SUMMARY

1. BACKGROUND.

Test Plan 32-57, *Test Plan for 5X Agent (VX, GB, and HD) Decontamination Verification*, was designed and conducted to confirm that the U. S. Army 5X thermal decontamination procedure decontaminates nerve and blister agent on the surface, and in the matrix of, metal coupons and filings. This report details the results of that work.

2. OBJECTIVES.

a. Verify 5X thermal decontamination of VX nerve agent [O-ethyl-S-(2-diiso-propylaminoethyl) methylphosphonothiolate], GB nerve agent (isopropylmethyl-phosphonofluoridate), and HD blister agent (2, 2'-dichlorodiethyl sulfide). Five X thermal decontamination requires a minimum temperature of 1000° F for 15 minutes (min).

b. Conduct separate, room temperature investigations with the following objectives:

(1) Perform background (agent-free) tests and determine what conditions and materials, if any, interfere with equipment and instrumentation.

(2) Thermally decontaminate VX-soaked and field coupons to 5X. Verify chemical agent level is below the "no effect concentration" or General Population Level (GPL). The VX-GPL is 3×10^{-6} milligram per cubic meter (mg/m^3). Monitor coupons or coupon fillings after thermal decontamination with an Automatic Continuous Air Monitoring System (ACAMS) to demonstrate that vapor is less than the GPL.

(3) Thermally decontaminate GB-soaked and field coupons to 5X. Verify chemical agent levels are below GPL (3×10^{-6} mg/m^3).

(4) Thermally decontaminate HD-soaked and field coupons to 5X. Verify chemical agent levels are below GPL (1×10^{-4} mg/m^3).

c. Demonstrate the 5X process is equivalent to "triple rinsing" by verifying that isopropyl alcohol (IPA) extract totals are less than Drinking Water Standards (DWS), via a gas chromatograph (GC). The DWS must be less than [in micrograms per liter (μg/L)]: (1) VX, 20; (2) GB, 20; and (3) HD, 200.

3. TEST RESULTS.

a. Thermally treated carbon steel coupons soaked in VX, GB, and HD for a minimum of 168 hours (hrs), and field coupons were chemical agent decontaminated after a minimum 1000° F for 15 min thermal treatment. Filings from those coupons were < 1 DWS.

b. Chemical agent was not identified in the vapor spaces above the coupons and filings, or in the coupon-, filing-IPA extract soak.

4. CONCLUSIONS.

a. Test data substantiate that the surface and the internal matrix of chemical agent contaminated carbon steel subjected to the 5X Thermal Decontamination procedure is decontaminated below the GPL [less than (<) 3×10^{-6} mg/m^3 for VX, $<3 \times 10^{-6}$ mg/m^3 for GB, and $<1 \times 10^{-4}$ mg/m^3 for HD].

b. Test data substantiate that 5X Thermal Decontamination is equivalent to or exceeds "triple rinsing." All samples subjected to IPA extract analysis demonstrated agent concentrations less than the DWS for all chemical agents.

TEST REPORT

FOR

CHEMICAL AGENT (VX, GB, AND HD) 5X DECONTAMINATION VERIFICATION

TEST REPORT 32-57a*

SECTION I. INTRODUCTION.

1. BACKGROUND.

Test Plan 32-57, *Test Plan for 5X Agent (VX, GB, and HD) Decontamination Verification*, was designed and conducted to confirm that the U. S. Army 5X thermal decontamination procedure decontaminates nerve and blister agent on the surface, and in the matrix of, metal coupons and filings. This report details the results of that work.

2. OBJECTIVES.

a. Verify 5X thermal decontamination of VX nerve agent [O-ethyl-S-(2-diiso-propylaminoethyl) methylphosphonothiolate], GB nerve agent (isopropylmethyl-phosphonofluoridate), and HD blister agent (2, 2'-dichlorodiethyl sulfide). Five X thermal decontamination requires a minimum temperature of 1000° F for 15 min.

b. Conduct separate, room temperature investigations with the following objectives:

(1) Perform background (agent-free) tests and determine what conditions and materials, if any, interfere with equipment and instrumentation.

(2) Thermally decontaminate VX-soaked and field coupons to 5X. Verify chemical agent level is below the "no effect concentration" or General Population Level (GPL). The VX-GPL is 3×10^{-6} milligram per cubic meter (mg/m^3). Monitor coupons or coupon fillings after thermal decontamination with an Automatic Continuous Air Monitoring System (ACAMS) to demonstrate that vapor is less than the GPL.

(3) Thermally decontaminate GB-soaked and field coupons to 5X. Verify chemical agent levels are below GPL (3×10^{-6} mg/m^3).

(4) Thermally decontaminate HD-soaked and field coupons to 5X. Verify chemical agent levels are below GPL (1×10^{-4} mg/m^3).

c. Demonstrate the 5X process is equivalent to "triple rinsing" by verifying that isopropyl alcohol (IPA) extract totals are less than Drinking Water Standards (DWS), via a gas chromatograph (GC). The DWS must be less than [in micrograms per liter (μg/L)]: (1) VX, 20; (2) GB, 20; and (3) HD, 200.

SECTION II. TEST PROCEDURES AND RESULTS.

1. TEST PROCEDURES.

a. Background.

(1) Department of Army (DA) regulation AR 385-61 states that any material which has been contaminated with chemical agent must be decontaminated prior to *release from Government control without precautions or restrictions. An approved* method of achieving decontamination is 5X Thermal Decontamination. Items are treated to a minimum temperature of 1000° F for 15 min in a furnace and monitored via Automatic Continuous Air Monitoring System (ACAMS).

(2) The USACAMDS Research, Development, and Demonstration (RD&D) Permit requires verification of the 5X Thermal Decontamination procedure. This report documents that verification of the USACAMDS 5X procedure.

(3) Laboratory (USACAMDS) analysis was performed on all agents. Purities were as follows:

AGENT	LAB (soak) LOT S/N	LAB TC NO.	PURITY (%)	Field LOT S/N	Field TC NO.	PURITY (%)
VX	NY 1767-A35	D24308	86.9	NY 1767-A32	D37318	*
GB	RM 76039-323	D83707	75.6	RM 8851-270	D27572	69.5
HD	RM 113-174	D17804	77.9	RM 113-174	D48978	78.5

*No purity data are available for this ton container. S/N = Serial Number. TC = Ton Container. Chemical analysis protocol is detailed on pgs A-6 and A-7, Appendix A.

(4) Agent tested coupons were weighed before and after Thermal Decontamination; filings were weighed after Thermal Decontamination. Each new solid coupon weighed approximately 24 grams (g); filings weighed approximately 1 g. Ton container (TC) field coupons and filings weighed approximately 40 g and 1 g each, respectively (Appendix B).

(5) New VX, GB, and HD 1018-carbon steel coupons measured 1.59 x 3.18 centimeters (cm) [5/8 x 1¼ inch (in.)] (Figure 1, Appendix C). Filings were obtained from cooled, 5X thermally decontaminated coupons, prior to IPA extraction (Figure 2, Appendix C). IPA extraction is detailed on pages A-8 through A-10, Appendix A.

(6) Field coupons were hand cut (with a reciprocating saw) from stockpile TCs (Figure 3, Appendix C).

(a) Due to the curvature of each TC surface, the coupons were trapezoidal in end cross-section with dimensions: 3.18 cm (1¼ in.) length; 1.11 cm (7/16 in.) width; and 1.27 cm (½ in.) height. The end cross-sectional diagonal distance was slightly larger than the inner diameter of the glass vials and tubes. A small portion of the painted surface was filed off after the coupon had completed the 5X procedure.

(b) The VX field coupons were hand cut, with a reciprocating saw, from TC Serial Number D37318. This TC was initially filled with VX at the Newport Army Munition Depot, Newport, Indiana, in May 1964. It was shipped to Tooele Army Depot November 1968. The coupons were hand cut to insure that the coupons were not affected by the heat from a torch. The coupons had an average weight of 36.01 g. Coupons produced 1.34 g filings per coupon. Coupons and filings were exposed to an average furnace temperature of 1022.1° F.

(c) The GB field samples were hand cut, with a reciprocating saw, from TC Serial Number D27572. This TC was initially filled with GB at the Rocky Mountain Arsenal, Colorado, in May 1952. It was shipped to Tooele Army Depot November 1968. The coupons were hand cut to insure that the coupons were not affected by the heat from a torch. The average solid coupon weight was 42.67 g and coupon filings weight was 1.11 g. Coupons and filings were exposed to an average furnace temperature of 1021.4° F.

(d) The HD field coupons were hand cut, with a reciprocating saw, from TC Serial Number D48978. This TC was initially filled with HD at the Rocky Mountain Arsenal, Colorado, in May 1946. The TC was shipped to Tooele Army Depot in November 1968. The coupons were hand cut to insure that the coupons were not affected by torch heat. The average solid coupon and coupon filings weighed 41.74 g and 1.15 g, respectively. Average furnace temperature was 1021.4° F.

(7) In order to insure that drinking water standard levels (1 DWS = 20 μg/L VX/GB and 200 μg/L HD) could be obtained with coupons/filings in diluted IPA extract solutions, a Class II Precision and Accuracy (P&A) study was conducted. The procedure is outlined in paragraph 5.3.2 of the Laboratory Quality Control Plan and Procedures (LQCPP) for the Chemical Stockpile Disposal Program (CSDP), Revision 4, dated 20 September 1993.

b. Preliminary (Background--**Non-Agent Contaminated** Sample) Tests.

(1) USACAMDS conducted preliminary tests for all three chemical agents.

(2) These preliminary, **Non-agent contaminated sample** tests evaluated **Uncontaminated** coupons and IPA extracts under the following conditions:

(a) Unheated, Solid-Coupon (Phase 1). Each coupon was placed in a 12.7 x 30.5 cm (5 in. x 12 in.) plastic bag and monitored in three ACAMS cycles (calibrated at GPL detection limits via USACAMDS SOP MON 33-00-99-05.) for background interference. The Teflon monitoring line from the ACAMS to the sample was 91.4 cm (3 ft) long. An additional 30.5 cm (1 ft) line was attached to a carbon filter and fed into the bag to yield sufficient air flow.

1 A VX ACAMS Cycle involves a 12.8 min sample/1.5 min purge.
2 A GB ACAMS Cycle involves a 12.0 min sample/1.5 min purge.
3 An HD ACAMS Cycle involves a 10.0 min sample/2.0 min purge.

(b) Heated, Solid-Coupon (Phase 2). A thermocouple was attached to each coupon which was placed into a muffle furnace through the vent opening on the top of the furnace (Figure 4, Appendix C). The thermocouple wire was attached to a digital display monitor and chart recorder. The furnace dial was turned to its highest setting. When the coupon temperature reached 900° F, the furnace dial setting was decreased to approximately 1.5. After the coupon reached 1000° F, the temperature was maintained for a 15 min heat soak period. At the end of the heat soak period, the thermocouple wires were disconnected from the monitor and recorder, and the furnace was turned off. The coupon was removed through the top of the furnace and placed onto a ceramic tile to cool. After the coupon cooled, it was monitored in three ACAMS cycles (calibrated at GPL detection limits via USACAMDS SOP MON 33-00-99-05.) for background interference, as in Phase 1. The coupon was then placed in a 25 x 150 millimeter (mm) Teflon capped culture tube containing 10 mL IPA, and agitated for 30 min on a shaker. The solution was analyzed by GC, via Depot Area Air Monitoring System (DAAMS) tubes, for background interference.

(c) Unheated, Coupon Filings (Phase 3). Approximately 1 g coupon filings was collected from a coupon. These filings were monitored for background interference and processed as described in Phase I.

(d) Heated, Coupon Filings (Phase 4). Filings were obtained from the coupon and monitored for background interference in the same manner as described in Phase 2. Filings were then placed in IPA-extraction tubes, with the exception that 5 mL IPA was used in the extraction technique.

c. **Chemical Agent Soak** Tests (carbon steel coupons and filings.)

(1) Sixteen solid-coupon and 16 coupon filing sets were used per test.

(2) To expedite testing, all coupons were simultaneously soaked in 25 x 52 mm glass vials containing chemical agent for seven days (168 hrs) (Figure 5, Appendix C). The coupons stood upright in individual glass vials containing 4 mL chemical agent each. The glass vial was a critical piece of equipment. It precluded contaminating the threaded portion of the coupon with chemical agent during the soaking period. Vials also curtailed excessive chemical agent usage and accumulation of hazardous waste.

(3) After seven days, coupons were carefully removed from the chemical agent vial with tweezers, to prevent thread contamination and, carefully blotted with Kimwipe® tissues.

(4) Preliminary (background--**nonagent**) Phase 2 procedures were followed for coupons and Phase 4 procedures were followed for filings: coupons/filings were thermally decontaminated in a muffle furnace at a minimum temperature of 1000° F for 15 min. The following exceptions applied:

(a) Protective gloves were worn when connecting the coupon to the thermocouple (a 2-person procedure).

(b) While in the muffle furnace, GPL-calibrated ACAMS monitored the coupons and filings to ensure personnel safety.

(c) After Thermal Decontamination, the muffle furnace was monitored for two full ACAMS cycles to insure that the muffle furnace was not contaminated.

(d) Each coupon was placed in the monitoring chamber, after sufficient cooling, and ACAMS monitored for two full ACAMS cycles. Additional monitoring was performed when filing the coupons.

(e) Coupon and coupon filing weights were obtained after 5X verification.

(f) Each solid coupon was placed in culture tubes containing 10 mL IPA; the coupon filings in 5 mL. Samples were agitated for 30 min on a shaker.

(g) The IPA solution was analyzed by GC. Thirty microliters (μL) IPA extract was injected into a DAAMS tube for VX/GB analysis, and 80 μL for HD analysis.

(h) Testing was repeated for the additional 15 coupons. Results are reported in Appendix B.

d. Field Sample Coupons.

(1) The coupons were heated and monitored as described above. The field coupons were not threaded. Care had to be taken, however, when inserting and removing (a 2-person procedure) the thermocouple into the field coupon hole drill (#52 drill bit, 0.0635 in).

(2) Coupon monitoring and extraction procedures had to be modified. A plastic bag was used as the sampling chamber (as in the Preliminary Phase 1) because the coupon could not fit into the regular monitoring chamber. The field coupons had arrived at the lab with a trapezoidal configuration 3.18 cm L x 1.11 cm W x 1.27 cm H (1¼ in. L x 7/16 in. W x ½ in. H). This required filing a small portion off the outer part of the coupon (after monitoring) so that it could fit into the culture tubes for extraction processing as described in chemical agent test, Phase 1, Section II, paragraph 1.c.

(3) Field sample filings were prepared, monitored, and processed for solvent extraction and sample analysis as described above. Coupon and coupon filing tests were repeated with 15 coupons. The results are reported in Appendix B.

e. Statistical Precision and Accuracy (P&A) Results.

(1) A Class II P&A study was performed for all three agents (VX, GB, and HD). The study involved contaminating carbon steel coupons with agent and extracting with IPA. The detection levels were at the DWS for the individual agents.

(2) Each analytical result is a conclusion as to whether agent was found or not found at or above the action level of the DWS.

2. TEST RESULTS.

a. Preliminary (Background–**Non-Agent Contaminated** Sample) Tests.

(1) Phase 1: **Uncontaminated**, Unheated Carbon Steel Coupons. Three coupons were monitored via ACAMS for each chemical agent.

(a) Measurements were at GPL guidelines (<3 x 10^{-6} mg/m^3 for VX/GB and 1 x 10^{-4} mg/m^3 for HD), or DWS guidelines (20 μg/L for VX/GB and 200 μg/L for HD).

(b) The ACAMS was calibrated at the GPL. All results were <1.0 GPL for all agents. Details are shown in Table 1a, Preliminary Test Results, Appendix B.

(2) Phase 2: **Uncontaminated**, Heated Carbon Steel Coupons. Three coupons were monitored via ACAMS for each chemical agent.

(a) The GC readings were <1.0 GPL for all agents.

(b) The IPA extract reading were all <1 DWS. Results, showing that no interferents were detected in the background testing, are detailed in Table 1b, Preliminary Test Results, Appendix B.

(3) Phase 3: **Uncontaminated**, Unheated Carbon Steel Filings. Three sets of filings were monitored via ACAMS for each chemical agent.

(a) The GC readings were <1.0 GPL for all agents.

(b) The IPA extract reading were all <1 DWS. Results, showing that no interferents were detected in the background testing, are detailed in Table 1c, preliminary Test Results, Appendix B.

(4) Phase 4: **Uncontaminated**, Heated Carbon Steel Filings. Three sets of filings were monitored via ACAMS for each chemical agent.

(a) The GC readings were <1.0 GPL for all agents.

(b) The IPA extract reading were all <1 DWS. Results, showing that no interferents were detected in the background testing, are detailed in Table 1d, preliminary Test Results, Appendix B.

b. **Chemical Agent** Tests.

(1) **VX-Soaked Coupon** Tests.

(a) Sixteen coupons were tested. The average weight was 24.71 g. The average coupon temperature, during thermal decontamination, was 1020° F. Average room temperature was 78.8° F.

(b) Chemical agent readings, after thermal decontamination, were <1.0 GPL ($<3 \times 10^{-6}$ mg/m^3). Gas chromatograph readings were <1.0 DWS (<20 μg/L). Results are detailed in Table 2a, VX Coupon Test Results, Appendix B.

(2) **VX-Soaked Coupon Filing** Tests.

(a) Sixteen sets were tested. The average weight was 1.26 g. The average filing-set temperature, during thermal decontamination, was 1021° F. Average room temperature was 81.6° F.

(b) Chemical agent readings, after thermal decontamination, were <1.0 GPL (<3 x 10^{-6} mg/m^3). Gas chromatograph readings were <1.0 DWS (<20 μg/L). Results are detailed in Table 2b, VX Coupon Filing Test Results, Appendix B.

(3) **VX-Soaked Field Coupon** Tests.

(a) Sixteen coupons were tested. The average weight was 36.01 g. The average coupon temperature, during thermal decontamination, was 1022° F. Average room temperature was 80.8° F.

(b) Chemical agent readings, after thermal decontamination, were <1.0 GPL (<3 x 10^{-6} mg/m^3). Gas chromatograph readings were <1.0 DWS (<20 μg/L). Results are detailed in Table 3a, VX Field Coupon Test Results, Appendix B.

(4) **VX-Soaked Field Coupon Filing** Tests.

(a) Sixteen sets were tested. The average weight was 1.34 g. The average coupon temperature, during thermal decontamination, was 1022° F. Average room temperature was 77.8° F.

(b) Chemical agent readings, after thermal decontamination, were <1.0 GPL (<3 x 10^{-6} mg/m^3). Gas chromatograph readings were <1.0 DWS (<20 μg/L). Results are detailed in Table 3b, VX Coupon Filing Test Results, Appendix B.

(5) **GB-Soaked Coupon** Tests.

(a) Sixteen coupons were tested. The average weight was 24.69 g. The average coupon temperature, during thermal decontamination, was 1019.9° F. Average room temperature was 74.9° F.

(b) Chemical agent readings, after thermal decontamination, were <1.0 GPL (<3 x 10^{-6} mg/m^3). Gas chromatograph readings were <1.0 DWS (<20 μg/L). Results are detailed in Table 4a, GB Coupon Test Results, Appendix B.

(6) **GB-Soaked Coupon Filing** Tests.

(a) Sixteen sets were tested. The average weight was 1.24 g. The average filing-set temperature, during thermal decontamination, was 1021.8° F. Average room temperature was 75.0° F.

(b) Chemical agent readings, after thermal decontamination, were <1.0 GPL (<3 x 10^{-6} mg/m^3). Gas chromatograph readings were <1.0 DWS (<20 μg/L). Results are detailed in Table 4b, GB Coupon Filing Test Results, Appendix B.

(7) **GB-Soaked Field Coupon** Tests.

(a) Sixteen coupons were tested. The average weight was 42.67 g. The average coupon temperature, during thermal decontamination, was 1019.8° F. Average room temperature was 80.1° F.

(b) Chemical agent readings, after thermal decontamination, were <1.0 GPL (<3 x 10^{-6} mg/m^3). Gas chromatograph readings were <1.0 DWS (<20 μg/L). Results are detailed in Table 5a, GB Field Coupon Test Results, Appendix B.

(8) **GB-Soaked Field Coupon Filing** Tests.

(a) Sixteen sets were tested. The average weight was 1.11 g. The average coupon temperature, during thermal decontamination, was 1019.9° F. Average room temperature was 79.5° F.

(b) Chemical agent readings, after thermal decontamination, were <1.0 GPL (<3 x 10^{-6} mg/m^3). Gas chromatograph readings were <1.0 DWS (<20 μg/L). Results are detailed in Table 5b, GB Coupon Filing Test Results, Appendix B.

(9) **HD-Soaked Coupon** Tests.

(a) Sixteen coupons were tested. The average weight was 24.17 g. The average coupon temperature, during thermal decontamination, was 1017.7° F. Average room temperature was 72.2° F.

(b) Chemical agent readings, after thermal decontamination, were <1.0 GPL (<1 x 10^{-4} mg/m^3). Gas chromatograph readings were <1.0 DWS (<200 μg/L). Results are detailed in Table 6a, HD Coupon Test Results, Appendix B.

(10) **HD-Soaked Coupon Filing** Tests.

(a) Sixteen sets were tested. The average weight was 1.10 g. The average filing-set temperature, during thermal decontamination, was 1018.6° F. Average room temperature was 71.5° F.

(b) Chemical agent readings, after thermal decontamination, were <1.0 GPL (<1 x 10^{-4} mg/m^3). Gas chromatograph readings were <1.0 DWS (<200 μg/L). Results are detailed in Table 6b, HD Coupon Filing Test Results, Appendix B.

(11) **HD-Soaked Field Coupon** Tests.

(a) Sixteen coupons were tested. The average weight was 41.74 g. The average coupon temperature, during thermal decontamination, was 1019.1° F. Average room temperature was 70.1° F.

(b) Chemical agent readings, after thermal decontamination, were <1.0 GPL (<1 x 10^{-4} mg/m^3). Gas chromatograph readings were <1.0 DWS (<200 μg/L). Results are detailed in Table 7a, HD Field Coupon Test Results, Appendix B.

(12) **HD-Soaked Field Coupon Filing** Tests.

(a) Sixteen sets were tested. The average weight was 1.15 g. The average coupon temperature, during thermal decontamination, was 1023.6° F. Average room temperature was 69.6° F.

(b) Chemical agent readings, after thermal decontamination, were <1.0 GPL (<1 x 10^{-4} mg/m^3). Gas chromatograph readings were <1.0 DWS (<200 μg/L). Results are detailed in Table 7b, HD Coupon Filing Test Results, Appendix B.

d. Statistical P&A Results.

(1) A Class II P&A-IPA extraction method, which spiked a DWS-level sample with dilute chemical agent, was performed. Each analytical result indicated whether chemical agent was found or not at, or above, the action level of the DWS in coupons or filings.

(2) The P&A study consisted of analyzing 10 samples (two at 1.25 DWS, four at 1.0 DWS, and four at 0.5 DWS) on two different days. Certification was obtained if the action level was set between 0.7 to less than 1.0 times the DWS and the action level is:
(a) Both 100% of the 1.25 and 1.00 DWS challenges yield a positive response but
(b) No more than 25% of the 0.5 DWS challenges yield a positive response.

(3) Tables 8, 9, and 10 (P&A Data for VX, GB, and HD IPA Extraction of DWS Samples, respectively) indicate that the IPA did extract agent over two days, and that the numbers (in ng) were in compliance with the initial 0.5 DWS, 1.0 DWS, and 1.25 DWS .

SECTION III. CONCLUSIONS.

1. Carbon steel coupons soaked in VX, GB, or HD for a minimum of 168 hrs were chemical agent decontaminated after a minimum 1000° F for 15 min thermal treatment.

2. Filings, from thermally treated (a minimum 1000° F for 15 min) carbon steel coupons soaked in VX, GB, or HD for a minimum of 168 hrs demonstrated chemical agent decontamination.

3. Coupons obtained from VX, GB, or HD field TCs, in which agent was stored for 30 years, were chemical agent decontaminated by thermal treatment at a minimum 1000° F for 15 min.

4. Filings from thermally treated (a minimum 1000° F for 15 min) carbon steel coupons from VX, GB, or HD field TCs demonstrated chemical agent decontamination.

5. The data prove that the surface and internal matrix of chemical agent contaminated carbon steel, subjected to the 5X Thermal Decontamination procedure, is decontaminated below the General Population Limits ($<3 \times 10^{-6}$ mg/m^3 for VX/GB and 1×10^{-4} mg/m^3 for HD).

6. Test data indicate that 5X Thermal Decontamination is equivalent to, or exceeds, "triple rinsing." All samples demonstrated decontamination below the DWS (20 μg/L for VX/GB and 200 μg/L for HD) for all chemical agents.

APPENDIX A

MATERIALS AND PROTOCOLS

MATERIALS

1. Chemical stockpiles are stored in carbon steel TCs, projectiles, rockets, bombs, and mines. The most common construction materials are carbon steel and stainless steel. Since carbon steel is more porous and more susceptible to corrosion, it was chosen.

2. All chemical agent was munition grade. Chemical Analysis is presented on pages A-6 and A-7. IPA methodology is detailed on A-8 through A-10.

3. New 1018-carbon steel coupons measured 1.59 x 3.18 cm (5/8 in. x 1¼ in.).

4. Field coupons were hand cut from stockpile TCs.

5. New 8 in. machinist, second cut, flat hand files were used to file every coupon. Files were manufactured by Nicholson or Simonds.

6. Glass, chemical agent-soaking vials were 25 x 52 millimeter (mm). Teflon capped culture tubes (25 x 150 mm) were used for extraction mixing.

7. EM Chemical, extraction IPA was Omni-solv grade, Part PX1834-1.

8. Type K calibrated thermocouples, serial numbers 9230298-1 and 930298-2, Omega Engineering part number KQSS-116G-12-CL5, were 0.16 cm (1.16 in.) diameter, 30.48 cm (12 in.) long 304 stainless steel. Specifications are shown on Pages A-2 through A-5. Omega performed a four point calibration on each thermocouple.

9. ACAMS detectors were calibrated at 1.0 GPL for VX/GB/HD agent detection and were chemical agent challenged every day prior to testing.

10. Gas chromatographs were GPL calibrated for chemical agent sample analysis. The Hewlett Packard, Model 5890 Series II, contained flame photometric detectors (FPD). The SGE Column Switching System backflush method was used.

11. Experiments were run in the Barkmeyer division, Ney, Inc., muffle furnace, Model M-525.

12. Experiments were timed with the GRA Labtimes, Model 171, Dimco-Gray Co. timer.

Four-Point Calibrated Thermocouple Probes

NEW!

Only **$15** additional per probe for "CL5" Calibration

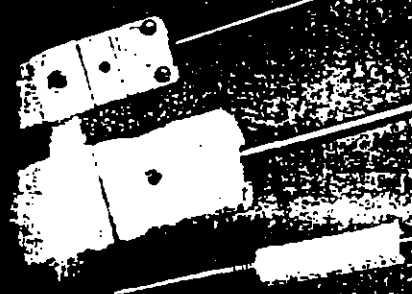

Miniature Quick-Disconnect Probes with Cable Clamps

Standard Quick Disconnect Probes with Cable Clamps

Molded Transition Probes

Rugged "Heavy Duty" Transition Probes

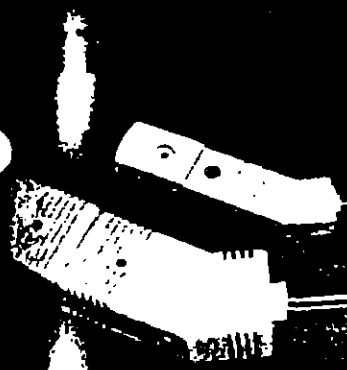

Utility Handle Probes with Retractable Cable and SMP Miniature Connectors

High Performance Low Noise Probes with Standard and Miniature Connectors and Cable Clamps

U.S. and Int'l Patents Pending.

The 30" probe and write-on connector are trademarks of Omega Engineering, Inc.

Individual Calibration Reports!

CALIBRATED THERMOCOUPLES NOW AVAILABLE OFF-THE-SHELF!!

- For Applications Where Extra High Accuracy is Required
- Each Probe Certified at Four Temperature Standards
- Calibration Certificate Card Included with Each Probe

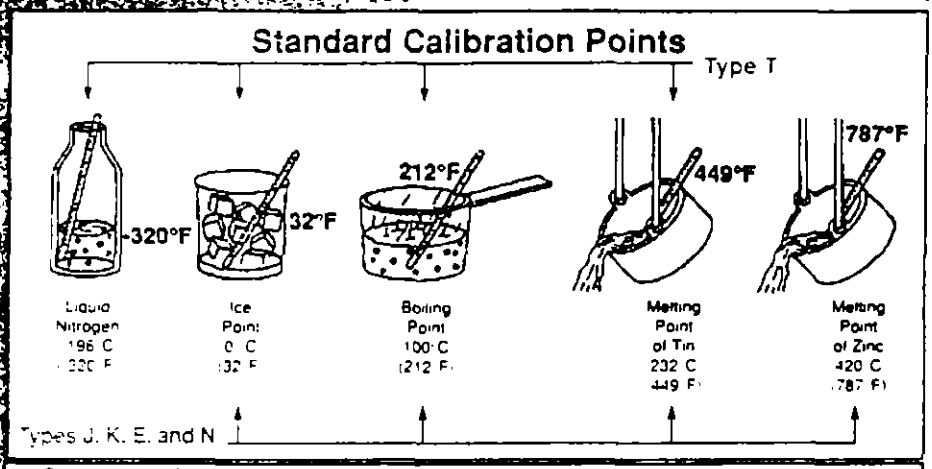

1. Choose the thermocouple probe you need.
2. For an additional $15 per probe price, we'll provide a calibration report detailing the accuracy at four temperatures, as shown in the chart above.
3. For a complete listing of thermocouple types available with CAL-5 certification, please consult our Sales Dept.

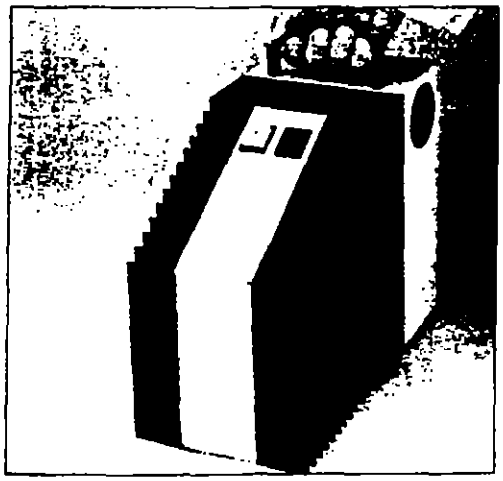

OMEGA's ice point™ is a highly accurate 0°C Thermoelectric "Refrigerator" Used in the Calibration of Temperature Instruments. Model TRCIII, $1175.

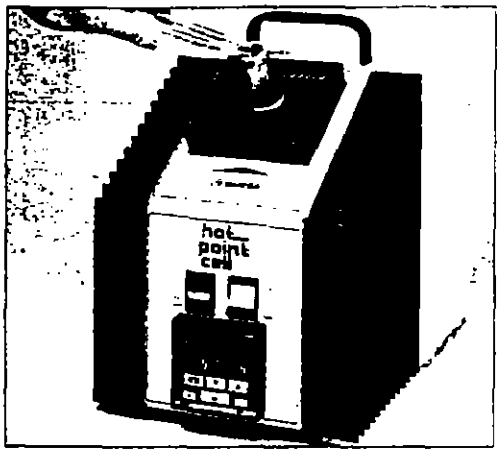

***OMEGA's hot point™ Thermocouple and RTD* Calibrator Calibrates All Temperature Sensors to Within ±1.5°F. Model CL900-110, $2995.**

Every CAL-5 Probe Supplied with a Calibration Report

OMEGA

One Omega Drive, P. O. Box 4047
Stamford, CT 06907 (203) 359-1660

Calibration Report

Probe I.D. # _____

Nominal Temperature		Departure	
°F	°C	°F	°C
-320	-196		
32	0		
212	100		
449	232		
787	419		

Certified By: _____

Note: To calculate actual temperature
- **Add departure when negative (-)**
- **Subtract departure when positive (+)**

EXAMPLE: Nominal Temperature = 419°C
Departure Temperature = -2°C
Actual Temperature = 417°C

ORDERING INFORMATION:

Most of OMEGA's mineral insulated thermocouples are available with 4-point calibration. *Please consult Sales for individual probe types not shown on the reverse* side of this page. To Order, add the suffix "-CL5" to the probe model number, and add $15 to the price.

ORDERING EXAMPLE:

GKQSS-14U-12-CL5: an OMEGA standard size low noise thermocouple, type-K calibration, 1/4" O.D. stainless steel sheath, ungrounded junction, 12" length, as shown on page A-25t ($33 price). This probe is supplied with a calibration card detailing accuracy at the following four nominal temperatures: 0°C (32°F), 100°C (212°F), 231.9°C (449°F) and 419.6°C (787°F). Price: **$33 + 15 = $48**

Standard Calibration Temperatures

Thermocouple Calibration	Liquid Nitrogen	Ice Point	Boiling Point	Tin Melting	Zinc Melting
T	-195.8°C (-320°F)	0°C (32°F)	100°C (212°F)	231.9°C (449°F)	—
J,K,E,N		0°C (32°F)	100°C (212°F)	231.9°C (449°F)	419.6°C (787°F)

P.S.! OMEGA's complete in-house calibration lab can calibrate probes and sensors, as well as instrumentation, for temperature, pressure, flow and pH applications. For fast, accurate, low cost and NIST traceable calibration, just dial:

1-800-82-66342
1-800-TC-OMEGA

NIST Traceable Calibrations
For Sensors, Wire and Instruments

MADE IN USA

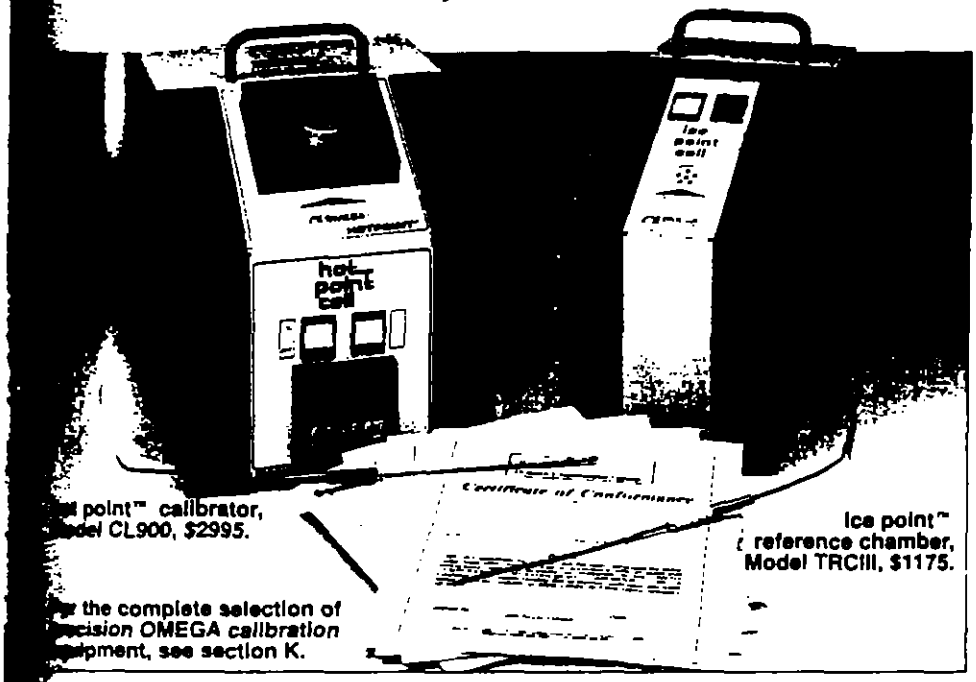

t point™ calibrator, odel CL900, $2995.

Ice point™ reference chamber, Model TRCIII, $1175.

r the complete selection of ecision OMEGA calibration uipment, see section K.

Wit calibration instrumentation con rming to MIL-STD-45662A, OMEGA can calibrate individual products (both new and existing) or *complete systems, with NIST* raceability if necessary. Scheduled, periodic calibration of equipment is easily arranged as well.

Calibration certificates are available for probes and instruments at cus omer *specified temperatures.* Te perature products which may be ca rated are:

- Thermocouple and RTD probes (thermistor must be calibrated as a system with a meter and wire).
- Thermocouple Wire.
- Probe/Meter Systems.
- Meters/Instrumentation.

Av able temperature ranges, eq ment used and accuracies are as llows:

1. For calibration temperatures between -25 and 100°C, a fluid bath is used. No limitations exist on probe length or diameter. Accurate to 0.2°C.
2. For calibrations between 100 and 400°C, an aerated sand bath s used. The minimum probe ength is 12" Accurate to 0.4°C.
3. Between 400 and 1000°C, a hot air oven is used to calibrate the probe. Minimum probe length is 18". Accurate to ±0.25% of the *specified temperature.*

Wire calibration requires cutting approximately 3' from the spool *being tested, forming a bead and* performing the calibrations as specified above. The tested wire will be sent along with the spool and *certification.*

To obtain a calibration certificate for one or more products or a system, *simply state the level of calibration* required as a separate line item on the order. Contact OMEGA Customer Service for pricing on *scheduled, periodic calibration.*

CAL-1

Upon request, OMEGA will guarantee that products supplied with a CAL-1 certificate are manufactured in accordance with all applicable instructions and specifications as published in OMEGA Engineering handbooks. OMEGA also certifies that all thermocouple materials conform to ANSI standard MC96.1. RTD *materials conform to DIN 43 760.*

CAL-2

Upon request, OMEGA will certify that *CAL-2 instrumentation* has been calibrated and tested to meet or exceed the published specifications. This calibration and testing is performed using instrumentation and standards traceable to the U. S. National Institute of Standards and Technology (NIST).

CAL-3 — From $75

Same as a CAL-2, with the addition of the NIST test numbers for reference.

CAL-4 — From $100

OMEGA certifies that the defined item has been calibrated and that calibration is certified as traceable to NIST. Traceability of these measurements is derived from NIST test numbers which are documented on the certificate. The pricing for CAL-4 certification is a $75 setup charge, plus $25 per temperature calibration point for thermocouples, or $35 per temperature calibration point for RTDs. For calibration of wire, use $90 set up charge.

Temperature Ratings

Probe Type	¼" Dia. Probe 18 AWG Wire	⅜" Dia. Probe 20 AWG Wire	⅛" Dia. Probe 24 AWG Wire	1/16" Dia. Probe 30 AWG Wire
J	900°F (482°C)	900°F (482°C)	700°F (371°C)	600°F (315°C)
K	1800°F (982°C)	1800°F (982°C)	1600°F (871°C)	1400°F (760°C)
T	550°F (287°C)	500°F (260°C)	400°F (204°C)	300°F (148°C)
E	1000°F (537°C)	1000°F (537°C)	800°F (426°C)	700°F (371°C)

OMEGA

One Omega Drive, P. O. Box 4047
Stamford, CT 06907 (203) 359-1660

Calibration Report

Probe I.D. # 930298

Nominal Temperature		Departure	
°F	°C	°F	°C
-320	-196		
32	0	-1.2	
212	100	-1.0	
449	232	-0.2	
787	419	-0.8	

Certified By: DGH

Note: To calculate actual temperature
- Add departure when negative (-)
- Subtract departure when positive (+)

EXAMPLE: Nominal Temperature = 419°C
Departure Temperature = -2°C
Actual Temperature = 417°C

MATERIAL PROTOCOLS

CHEMICAL ANALYSIS

1. The VX agent purity was performed following Military Specification Mil-C-51105A (MU). The agent lot number was NY 1767-A35. The ton container (TC) number was D-24308. The analysis was done in duplicate on 2 Mar. 90. The calculations are:

a. Percent Free Mercaptan:

I_2 = Iodine
N = Normality

[(16.1)(0.0639 N I_2)(0.60 mL I_2) ÷ 0.5018g VX = 1.23%.

The duplicate yielded 0.85 mL I_2, 0.5488g VX and 1.59% Mercaptan. The average was therefore 1.41% Mercaptan.

b. Percent Bis Compound:

{[(38.2)(0.0639 N I_2)(0.90 mL I_2)] ÷ (0.4651g VX)} - [(2.38)(1.41% Free Mercaptan)] = 1.37.

The duplicate yielded 0.85 mL I_2, 0.4484g VX and 1.27% Bis compound. The average was therefore 1.32% Bis compound.

c. Percent VX:

{[(26.74)(0.0639 N I_2)(21.40 mL I_2] ÷ (0.4058g VX)} - [(1.66)(1.41% Free Mercaptan) + (1.40)(1.32% Bis compound)] = 85.92.

The duplicate yielded 23.65 mL I_2, 0.4392g VX and 87.82% VX. The average was therefore 86.9% VX.

2. The HD agent purity was performed following Military Specification Mil-C-12051B (MU). The agent lot number was RM 113-174. The TC number was D-17084. The analysis was done in duplicate on 19 Oct. 95. The calculations are:

100 - [(14.45 - 6.30) ÷ 0.368] = 77.86%.

14.45° C = Freezing point of pure HD.

0.368° C = Decrease in freezing point for every 1% specimen impurity.

The duplicate yielded 6.35 with an purity of 77.99%. Therefore the average was 77.9% HD. The 6.30 and 6.35 represent the freezing point in °C of HD obtained.

3. The GB purity was performed following Military Specification Mil-C-10758D (MU). the agent lot number was RM 76039-323. The TC number was D-83707. The analysis was done in triplicate on 12 Sept. 95. The calculations are as follows:

NaOH = Sodium Hydroxide
HCl = Hydrochloric Acid

g/ml

%GB = 7{[(36.2 mL NaOH)(0.0932 N NaOH)] - [(14.6 mL HCl)(0.09747 N HCl)] + 0.1809g GB = 75.4.

The duplicate yielded 32.4 mL of NaOH, 0.1619g GB, 13.0 mL HCl, and 75.8% GB. The triplicate yielded 35.3 mL of NaOH, 0.1767g GB, 14.2 mL HCl, and 75.5% GB. The average was therefore 75.6% GB.

ISOPROPANOL (IPA): THE EXTRACTION SOLVENT

1. LQCPP.

The LQCPP, Rev. 4, Sept. 93, page 12, lists isopropanol as the suggested solvent of use for dilute agent solutions. In addition, the LQCPP, page 2, appendix C, lists isopropanol as the solvent of choice for analytical procedures to determine the amount of systematic error and agent concentration. The analytical procedure, below, details the isopropanol solvent extraction on the P&A. The P&A is a Class II method that is listed on page 22 in the LQCPP. All agent P&As (VX, GB, and HD) were successful and this validates the feasibility of recovering agent from carbon steel coupons and their filings. The data is incorporated into the test report.

2. Procedure.

a. This procedure demonstrates the feasibility of recovering VX, GB, and HD agent from a carbon-steel coupon in support of TP 32-57.

b. Equipment:

(1) Chromosorb 106-packed DAAMS and transfer tubes.

(2) Carbon-steel coupons.

(3) 10 mL pipet.

(4) Analytical balance.

(5) Test tubes with Teflon caps.

(6) 100 μL syringes.

(7) Shaker.

(8) Gas Chromatograph (GC).

(9) Vise and files.

(10) DAAMS AgF filters and hardware.

(11) Tenax packed DAAMS and transfer tubes.

ISOPROPANOL (IPA): SOLVENT EXTRACTION PRECISION AND ACCURACY (P&A) PROCEDURE (CONTINUED)

c. Reagents:

(1) Reagent grade IPA.

(2) RDTE solution of 2000 ng/mL in IPA for VX and GB.

(3) RDTE solution of 50,400 ng/mL in IPA for HD.

d. Procedure:

(1) File approximately 0.1g of filings from carbon steel coupon, weigh it, and place into test tube and cap. Prepare 24 samples this way.

(2) Weigh each sample to the nearest 0.1mg.

(3) Using a 100 μL syringe, add 125, 100, and 50μL of 2000 ng/mL of VX or GB in IPA, and 50, 40, and 20 μL of 50,400 ng/mL HD in IPA to the filings. The μL amounts correspond to two samples at the 1.25 Drinking Water Standard (DWS), four at the 1.0 DWS, and four at the 0.5 DWS, respectively. Two IPA blanks are also prepared and analyzed. One DWS for VX or GB equals 20 ng/mL and one DWS for HD is equal to 200 ng/mL. Twelve samples are prepared in this manner for one day. Twelve more samples are similarly prepared on a consecutive day. This is a total of 24 samples.

(4) Secure caps on test tubes and allow first set of 12 samples to repose in hood for 24 hours. Second set of 12 samples will be similarly processed the following day.

(5) Add 10 mL of IPA with a 10 mL pipet to each test tube. With cap on, agitate on shaker for 30 min.

(6) Stop shaker and remove test tube. Remove cap and withdraw 30 μL for VX or GB and 80 μL for HD, of the IPA extract into a 100 μL syringe with the needles above the steel filings. Repeat for remaining set of 12 test tubes.

(7) Slowly eject contents of syringe into labeled DAAMS tube, which is attached to operating aspiration equipment. Aspirate for 5 min. and then transfer to a transfer tube. Because of 30 μL and 80 μL ejected, usage of a modified DAAMS fitting with a double dust filter will be necessary.

(9) Repeat entire process (steps c thru h) for solid coupons.

e. Calculations:

The GC value will be in total nanogram of sample which can be directly related back to the original sample sought after in terms of DWS in ng/mL recoveries.

f. Operating Notes:

(1) For this P&A study, the Class II method is used as a guide line.

(2) This is a semi-qualitative method.

(3) IPA is assessed to be a viable choice of solvent which is able to extract VX from treated carbon steel filings if the following prevails: 100% of the 1.25 and 1.0 DWS challenges yield a positive response and no more than 25% of the 0.5 DWS challenges yield a positive response.

(4) Lab Analysts are not given access to the sample target concentrations according to the LQCPP.

g. References:

(1) Laboratory Quality Control Plan and Procedures (LQCPP) Rev. 4, 5.3.2.

(2) TB MED 577, Chapter 3, 3-1, March 1986.

(3) All appropriate Analytical Branch Laboratory SOPs.

APPENDIX B

TABLES

TABLE 1: PRELIMINARY TEST RESULTS

a. Phase 1: Uncontaminated, Unheated Carbon Steel Coupons			
Coupon	Agent	ACAMS Agent Readings (mg/m^3)	Room Temperature (° F)
1	VX	$<3 \times 10^{-6}$	74_{min}
2	VX	$<3 \times 10^{-6}$	75
3	VX	$<3 \times 10^{-6}$	76
1	GB	$<3 \times 10^{-6}$	77_{max}
2	GB	$<3 \times 10^{-6}$	77
3	GB	$<3 \times 10^{-6}$	77
1	HD	$<1 \times 10^{-4}$	77
2	HD	$<1 \times 10^{-4}$	77
3	HD	$<1 \times 10^{-4}$	77

b. Phase 2: Uncontaminated, Heated Carbon Steel Coupons					
Coupon	Chemical Agent	ACAMS Agent Reading	GC Reading	Room Temp. (° F)	Coupon Temp. (° F)
1	VX	nd	<1 DWS	76_{min}	1020
2	VX	nd	<1 DWS	77_{max}	1017
3	VX	nd	<1 DWS	77	1000_{min}
1	GB	nd	<1 DWS	77	1024
2	GB	nd	<1 DWS	77	1038_{max}
3	GB	nd	<1 DWS	77	1029
1	HD	nd	<1 DWS	77	1024
2	HD	nd	<1 DWS	77	1038
3	HD	nd	<1 DWS	77	1029

Non-Detectable = nd = < 1 GPL = $<3 \times 10^{-6}$ mg/m^3 VX, $<3 \times 10^{-6} mg/m^3$ GB, $<1 \times 10^{-4}$ mg/m^3 HD. Drinking Water Standard = DWS = 20 $\mu g/L$ VX and GB; 200 $\mu g/L$ HD.

TABLE 1: PRELIMINARY TEST RESULTS (CONTINUED)

c. Phase 3: Uncontaminated, Unheated, Carbon Steel Filings					
Coupon	Agent	ACAMS Agent Reading	GC Reading	Room Temp. (° F)	Coupon Weight (g)
1	VX	nd	N/A	74min	1.22
2	VX	nd	N/A	75	1.11
3	VX	nd	N/A	76	1.27max
1	GB	nd	N/A	77max	1.19
2	GB	nd	N/A	77	1.02min
3	GB	nd	N/A	77	1.12
1	HD	nd	N/A	77	1.19
2	HD	nd	N/A	77	1.02
3	HD	nd	N/A	77	1.12

d. Phase 4: Uncontaminated, Heated, Carbon Steel Filings						
Coupon	Agent	ACAMS Agent Reading	GC Reading	Room Temp. (° F)	Coupon Temp. (° F)	Coupon Wt. (g)
1	VX	nd	<1 DWS	76min	1017	1.14
2	VX	nd	<1 DWS	77	1012 min	1.21max
3	VX	nd	<1 DWS	77	1020	1.18
1	GB	nd	<1 DWS	78max	1021	1.00min
2	GB	nd	<1 DWS	78	1036max	1.17
3	GB	nd	<1 DWS	78	1034	1.20
1	HD	nd	<1 DWS	78	1021	1.00
2	HD	nd	<1 DWS	78	1036	1.17
3	HD	nd	<1 DWS	78	1034	1.20

Non-Detectable = nd = <1 GPL = <3 x 10^{-6} mg/m^3 VX, <3 x 10^{-6} mg/m^3 GB, <1 x 10^{-4} mg/m^3 HD. Drinking Water Standards = DWS = 20 μg/L VX and GB; 200 μg/L HD.

TABLE 2: VX TEST RESULTS

a. COUPONS					
Coupon	ACAMS Agent Reading	GC Reading	Room Temp. (° F)	Coupon Temp. (° F)	Coupon Weight (g)
1	nd	<1 DWS	73min	1015	24.83
2	nd	<1 DWS	75	1012min	24.59
3	nd	<1 DWS	75	1018	24.76
4	nd	<1 DWS	76	1018	24.64
5	nd	<1 DWS	77	1025	24.60
6	nd	<1 DWS	77	1020	24.85
7	nd	<1 DWS	80.6	1020	24.85max
8	nd	<1 DWS	80.6	1018	24.76
9	nd	<1 DWS	80.6	1015	24.80
10	nd	<1 DWS	80.6	1014	24.73
11	nd	<1 DWS	80.6	1020	24.62
12	nd	<1 DWS	80.6	1035max	24.75
13	nd	<1 DWS	80.6	1022	24.77
14	nd	<1 DWS	80.6	1030	24.58
15	nd	<1 DWS	81.1	1017	24.57min
16	nd	<1 DWS	81.8max	1025	24.60
AVG	nd	<1 DWS	78.8	1020	24.71

Non-Detectable = nd = < 1 GPL = $<3 \times 10^{-5}$ mg/m^3 VX, $<3 \times 10^{-6}$ mg/m^3 GB, $<1 \times 10^{-4}$ mg/m^3 HD. Drinking Water Standard = DWS = 20 μg/L VX and GB; 200 μg/L HD.

TABLE 2: VX TEST RESULTS (CONTINUED)

b. FILINGS					
Coupon	ACAMS Agent Reading	GC Reading	Room Temp. (° F)	Coupon Temp. (° F)	Coupon Weight (g)
1	nd	<1 DWS	78min	1024	0.80min
2	nd	<1 DWS	85max	1026	1.11
3	nd	<1 DWS	85	1023	1.16
4	nd	<1 DWS	85	1022	1.16
5	nd	<1 DWS	85	1020	1.11
6	nd	<1 DWS	85	1026	1.44
7	nd	<1 DWS	85	1011	1.21
8	nd	<1 DWS	78	1021	1.35
9	nd	<1 DWS	79	1021	1.28
10	nd	<1 DWS	80	1012	1.24
11	nd	<1 DWS	80	1010min	1.21
12	nd	<1 DWS	80	1015	1.42
13	nd	<1 DWS	80	1025	1.23
14	nd	<1 DWS	80	1031max	1.24
15	nd	<1 DWS	80	1020	1.78max
16	nd	<1 DWS	80	1021	1.36
AVG	nd	<1 DWS	81.6	1021	1.26

Non-Detectable = nd = < 1 GPL = $<3 \times 10^{-6}$ mg/m^3 VX, $<3 \times 10^{-6}$ mg/m^3 GB, $<1 \times 10^{-4}$ mg/m^3 HD. Drinking Water Standard = DWS = 20 μg/L VX and GB; 200 μg/L HD.

TABLE 3: VX FIELD COUPON TEST RESULTS

a. COUPONS					
Coupon	ACAMS Agent Reading	GC Reading	Room Temp. (° F)	Coupon Temp. (° F)	Coupon Weight (g)
1	nd	<1 DWS	79.5	1020	33.69
2	nd	<1 DWS	81	1014min	33.47
3	nd	<1 DWS	81	1021	34.97
4	nd	<1 DWS	83	1021	34.58
5	nd	<1 DWS	81	1021	35.19
6	nd	<1 DWS	81	1025	37.06
7	nd	<1 DWS	79	1021	37.74
8	nd	<1 DWS	80	1024	37.63
9	nd	<1 DWS	80	1021	39.73max
10	nd	<1 DWS	80	1020	37.59
11	nd	<1 DWS	81	1026	31.37min
12	nd	<1 DWS	81	1027max	38.17
13	nd	<1 DWS	81	1019	34.98
14	nd	<1 DWS	81	1024	38.80
15	nd	<1 DWS	85.1max	1022	35.76
16	nd	<1 DWS	78.8min	1025	35.49
AVG	nd	<1 DWS	80.8	1022	36.01

Non-Detectable = nd = < 1 GPL = <3 x 10^{-6} mg/m^3 VX, <3 x 10^{-6} mg/m^3 GB, <1 x 10^{-4} mg/m^3 HD. Drinking Water Standard = DWS = 20 μg/L VX and GB; 200 μg/L HD.

TABLE 3: VX FIELD COUPON TEST RESULTS (CONTINUED)

b. FILINGS						
Coupon	Monitor	Agent Reading	GC Reading	Room Temp. (° F)	Coupon Temp. (° F)	Coupon Weight (g)
1	ACAMS	nd	<1 DWS	77.9	1020	1.35
2	ACAMS	nd	<1 DWS	77.9	1020	1.47
3	ACAMS	nd	<1 DWS	77.9	1019	1.41
4	ACAMS	nd	<1 DWS	77.9	1037max	1.34
5	ACAMS	nd	<1 DWS	77.9	1020	1.15min
6	ACAMS	nd	<1 DWS	77.9	1024	1.32
7	ACAMS	nd	<1 DWS	76.3min	1016	1.21
8	ACAMS	nd	<1 DWS	76.3	1030	1.27
9	ACAMS	nd	<1 DWS	77	1025	1.40
10	ACAMS	nd	<1 DWS	77	1026	1.20
11	ACAMS	nd	<1 DWS	77	1024	1.66max
12	ACAMS	nd	<1 DWS	77	1011min	1.31
13	ACAMS	nd	<1 DWS	77	1021	1.50
14	ACAMS	nd	<1 DWS	77	1025	1.32
15	ACAMS	nd	<1 DWS	81max	1021	1.31
16	ACAMS	nd	<1 DWS	81	1019	1.28
AVG	ACAMS	nd	<1 DWS	77.8	1022	1.34

Non-Detectable = nd = < 1 GPL = $<3 \times 10^{-6}$ mg/m^3 VX, $<3 \times 10^{-6}$ mg/m^3 GB, $<1 \times 10^{-4}$ mg/m^3 HD. Drinking Water Standard = DWS = 20 μg/L VX and GB; 200 μg/L HD.

TABLE 4: GB TEST RESULTS

a. COUPONS					
Coupon	ACAMS Agent Reading	GC Reading	Room Temp. (° F)	Coupon Temp. (° F)	Coupon Weight (g)
1	nd	<1 DWS	75.2	1021	24.70
2	nd	<1 DWS	75.2	1016	24.69
3	nd	<1 DWS	76.0	1025	24.82
4	nd	<1 DWS	76.0	1019	24.86max
5	nd	<1 DWS	72.0min	1012min	24.80
6	nd	<1 DWS	72.0	1029	24.67
7	nd	<1 DWS	75.0	1016	24.83
8	nd	<1 DWS	75.0	1019	24.57
9	nd	<1 DWS	75.0	1019	24.73
10	nd	<1 DWS	75.0	1018	24.62
11	nd	<1 DWS	75.0	1023	24.75
12	nd	<1 DWS	75.0	1023	24.65
13	nd	<1 DWS	77.0max	1015	24.79
14	nd	<1 DWS	75.0	1020	24.55
15	nd	<1 DWS	75.0	1032max	24.49min
16	nd	<1 DWS	75.0	1012	24.51
AVG	nd	<1 DWS	74.9	1019.9	24.69

Non-Detectable = nd = < 1 GPL = $<3 \times 10^{-6}$ mg/m^3 VX, $<3 \times 10^{-6}$ mg/m^3 GB, $<1 \times 10^{-4}$ mg/m^3 HD. Drinking Water Standard = DWS = 20 μg/L VX and GB; 200 μg/L HD.

TABLE 4: GB TEST RESULTS (CONTINUED)

b. FILINGS.					
Coupon	ACAMS Agent Reading	GC Reading	Room Temp. (° F)	Coupon Temp. (° F)	Coupon Weight (g)
1	nd	<1 DWS	75.0min,max	1023	1.40
2	nd	<1 DWS	75.0	1023	1.41
3	nd	<1 DWS	75.0	1015	1.46max
4	nd	<1 DWS	75.0	1019	1.44
5	nd	<1 DWS	75.0	1024	1.13
6	nd	<1 DWS	75.0	1015min	1.14
7	nd	<1 DWS	75.0	1019	1.12
8	nd	<1 DWS	75.0	1024	1.29
9	nd	<1 DWS	75.0	1025	1.02min
10	nd	<1 DWS	75.0	1020	1.06
11	nd	<1 DWS	75.0	1021	1.03
12	nd	<1 DWS	75.0	1023	1.45
13	nd	<1 DWS	75.0	1028max	1.24
14	nd	<1 DWS	75.0	1026	1.32
15	nd	<1 DWS	75.0	1015	1.10
16	nd	<1 DWS	75.0	1028	1.26
AVG	nd	<1 DWS	75.0	1021.8	1.24

Non-Detectable = nd = < 1 GPL = $<3 \times 10^{-6}$ mg/m^3 VX, $<3 \times 10^{-6}$ mg/m^3 GB, $<1 \times 10^{-4}$ mg/m^3 HD. Drinking Water Standards = DWS = 20 μg/L VX and GB; 200 μg/L HD.

TABLE 5: GB FIELD COUPON TEST RESULTS

a. COUPONS					
Coupon	ACAMS Agent Reading	GC Reading	Room Temp. (° F)	Coupon Temp. (° F)	Coupon Weight (g)
1	nd	<1 DWS	77.0	1013min	44.65
2	nd	<1 DWS	79.0	1019	53.20
3	nd	<1 DWS	82.4	1014	44.10
4	nd	<1 DWS	77.0	1020	35.82min
5	nd	<1 DWS	79.0	1023	37.34
6	nd	<1 DWS	81.6	1030	39.26
7	nd	<1 DWS	84.3max	1017	41.08
8	nd	<1 DWS	82.5	1014	40.54
9	nd	<1 DWS	82.0	1023	40.70
10	nd	<1 DWS	78.8	1013	36.58
11	nd	<1 DWS	80.2	1022	58.16max
12	nd	<1 DWS	80.2	1023	43.69
13	nd	<1 DWS	80.6	1015	42.88
14	nd	<1 DWS	82.0	1028max	39.77
15	nd	<1 DWS	80.6	1020	40.46
16	nd	<1 DWS	74.7min	1022	44.52
AVG	nd	<1 DWS	80.1	1019.8	42.67

Non-Detectable = nd = < 1 GPL = $<3 \times 10^{-6}$ mg/m^3 VX, $<3 \times 10^{-6}$mg/m^3 GB, $<1 \times 10^{-4}$ mg/m^3 HD. Drinking Water Standard = DWS = 20 μg/L VX and GB; 200 μg/L HD.

TABLE 5: GB FIELD COUPON TEST RESULTS (CONTINUED)

b. FILINGS					
Coupon	ACAMS Agent Reading	GC Reading	Room Temp. (° F)	Coupon Temp. (° F)	Coupon Weight (g)
1	nd	<1 DWS	77.7	1019	1.19
2	nd	<1 DWS	77.7	1020	0.97
3	nd	<1 DWS	79.2	1022	1.01
4	nd	<1 DWS	79.0	1014	1.09
5	nd	<1 DWS	82.4	1028	1.15
6	nd	<1 DWS	72.1min	1021	1.01
7	nd	<1 DWS	75.0	1017	1.10
8	nd	<1 DWS	78.8	1024	1.04
9	nd	<1 DWS	81.5	1013	1.18
10	nd	<1 DWS	82.2	1022	1.14
11	nd	<1 DWS	82.4	1024	1.12
12	nd	<1 DWS	79.3	1017	1.00
13	nd	<1 DWS	79.5	1030max	1.26
14	nd	<1 DWS	80.6	1016	1.25
15	nd	<1 DWS	82.2	1022	1.34max
16	nd	<1 DWS	82.8max	1009min	0.96min
AVG	nd	<1 DWS	79.5	1019.9	1.11

Non-Detectable = nd = < 1 GPL = $<3 \times 10^{-6}$ mg/m^3 VX, $<3 \times 10^{-6}$ mg/m^3 GB, $<1 \times 10^{-4}$ mg/m^3 HD. Drinking Water Standards = DWS = 20 μg/L VX and GB; 200 μg/L HD.

TABLE 6: HD TEST RESULTS

a. COUPONS					
Coupon	ACAMS Agent Reading	GC Reading	Room Temp. (° F)	Coupon Temp. (° F)	Coupon Weight (g)
1	nd	<1 DWS	72.0	1026	24.08
2	nd	<1 DWS	72.0	1027max	24.14
3	nd	<1 DWS	74.0	1015	24.17
4	nd	<1 DWS	74.0	1020	24.15
5	nd	<1 DWS	69.0	1013	24.16
6	nd	<1 DWS	70.0	1010min	24.17
7	nd	<1 DWS	71.0	1019	24.14
8	nd	<1 DWS	73.0	1014	24.15
9	nd	<1 DWS	75.0max	1018	23.33min
10	nd	<1 DWS	75.0	1018	24.12
11	nd	<1 DWS	70.0	1017	24.15
12	nd	<1 DWS	72.0	1024	24.14
13	nd	<1 DWS	73.0	1014	24.15
14	nd	<1 DWS	74.0	1015	24.14
15	nd	<1 DWS	74.0	1019	24.84max
16	nd	<1 DWS	67.0min	1014	24.70
AVG	nd	<1 DWS	72.2	1017.7	24.17

Non-Detectable = nd = < 1 GPL = $<3 \times 10^{-6}$ mg/m^3 VX, $<3 \times 10^{-6}$ mg/m^3 GB, $<1 \times 10^{-4}$ mg/m^3 HD. Drinking Water Standards = DWS = 20 μg/L VX AND GB; 200 μg/L HD.

TABLE 6: HD TEST RESULTS (CONTINUED)

b. FILINGS					
Coupon	ACAMS Agent Reading	GC Reading	Room Temp. (° F)	Coupon Temp. (° F)	Coupon Weight (g)
1	nd	<1 DWS	69.0min	1013	1.09
2	nd	<1 DWS	71.0	1024	1.26
3	nd	<1 DWS	73.0	1018	1.03
4	nd	<1 DWS	75.0max	1016	1.06
5	nd	<1 DWS	74.0	1023	0.96
6	nd	<1 DWS	69.0	1019	1.12
7	nd	<1 DWS	70.0	1023	1.09
8	nd	<1 DWS	70.0	1019	0.89min
9	nd	<1 DWS	71.0	1026max	1.18
10	nd	<1 DWS	71.0	1018	1.28max
11	nd	<1 DWS	72.0	1013	1.27
12	nd	<1 DWS	70.0	1015	1.16
13	nd	<1 DWS	70.0	1022	0.99
14	nd	<1 DWS	71.0	1021	0.96
15	nd	<1 DWS	73.0	1011min	1.00
16	nd	<1 DWS	75.0	1016	1.26
AVG	nd	<1 DWS	71.5	1018.6	1.10

Non-Detectable = nd = < 1 GPL = $<3 \times 10^{-6}$ mg/m^3 VX, $<3 \times 10^{-6}$ mg/m^3 GB, $<1 \times 10^{-4}$ mg/m^3 HD. Drinking Water Standards = DWS = 20 μg/L VX and GB; 200 μg/L HD.

TABLE 7: HD FIELD COUPON TEST RESULTS

a. COUPONS					
Coupon	ACAMS Agent Reading	GC Reading	Room Temp. (° F)	Coupon Temp. (° F)	Coupon Weight (g)
1	nd	<1 DWS	68.0	1014	37.87
2	nd	<1 DWS	70.0	1020	38.53
3	nd	<1 DWS	70.0	1021	37.62
4	nd	<1 DWS	71.0	1013	39.59
5	nd	<1 DWS	71.0	1015	43.44
6	nd	<1 DWS	72.0	1025	41.43
7	nd	<1 DWS	66.0min	1015	65.96max
8	nd	<1 DWS	68.0	1012min	36.18min
9	nd	<1 DWS	73.0	1022	39.96
10	nd	<1 DWS	74.0max	1021	43.33
11	nd	<1 DWS	74.0	1018	41.15
12	nd	<1 DWS	67.0	1020	39.18
13	nd	<1 DWS	67.0	1027	42.29
14	nd	<1 DWS	68.0	1015	44.56
15	nd	<1 DWS	71.0	1032max	36.83
16	nd	<1 DWS	71.0	1016	39.99
AVG	nd	<1 DWS	70.1	1019.1	41.74

Non-Detectable = nd = < 1 GPL = $<3 \times 10^{-6}$ mg/m^3 VX, $<3 \times 10^{-6}$ mg/m^3 GB, $<1 \times 10^{-4}$ mg/m^3 HD. Drinking Water Standards = DWS = 20μg/L VX and GB; 200 μg/L HD.

TABLE 7: HD FIELD COUPON TEST RESULTS (CONTINUED)

b. FILINGS					
Coupon	ACAMS Agent Reading	GC Reading	Room Temp. (° F)	Coupon Temp. (° F)	Coupon Weight (g)
1	nd	<1 DWS	67.0min	1022	1.29
2	nd	<1 DWS	67.0	1025	1.13
3	nd	<1 DWS	67.0	1021	1.63max
4	nd	<1 DWS	67.0	1022	1.34
5	nd	<1 DWS	71.0	1022	0.99
6	nd	<1 DWS	72.0	1024	1.25
7	nd	<1 DWS	73.0max	1025	1.28
8	nd	<1 DWS	73.0	1022	1.28
9	nd	<1 DWS	67.0	1023	1.19
10	nd	<1 DWS	68.0	1025	1.13
11	nd	<1 DWS	72.0	1025	1.00
12	nd	<1 DWS	72.0	1027max	1.04
13	nd	<1 DWS	68.0	1024	0.91
14	nd	<1 DWS	70.0	1026	0.87min
15	nd	<1 DWS	70.0	1025	1.00
16	nd	<1 DWS	70.0	1020min	1.09
AVG	nd	<1 DWS	69.6	1023.6	1.15

Non-Detectable = nd = < 1 GPL = <3 x 10^{-6} mg/m^3 VX, <3 x 10^{-6} mg/m^3 GB, <1 x 10^{-4} mg/m^3 HD. Drinking Water Standard = DWS = 20 μg/L VX and GB; 200 μg/L HD.

TABLE 8. P&A DATA FOR VX IPA EXTRACTION OF DWS SAMPLES

VX P&A DATA SOLID-COUPONS			
DWS	Initial Agent (ng)	Day 1 Recovered Agent (ng)	Day 2 Recovered Agent (ng)
0	0	0	0
0	0	0	0
0.50	0.30	0.20	0.30
0.50	0.30	0.32	0.42
0.50	0.30	0.23	0.35
0.50	0.30	0.23	0.26
1.0	0.60	0.57	0.76
1.0	0.60	0.44	0.70
1.0	0.60	0.58	0.68
1.0	0.60	0.49	0.61
1.25	0.75	1.09	0.76
1.25	0.75	0.72	0.72

TABLE 8. P&A DATA FOR VX IPA EXTRACTION OF DWS SAMPLES (CONTINUED)

DWS	Initial Agent (ng)	Day 1 Recovered Agent (ng)	Day 2 Recovered Agent (ng)
0	0	0	0
0	0	0	0
0.50	0.30	0.33	0.41
0.50	0.30	0.35	0.49
0.50	0.30	0.33	0.41
0.50	0.30	0.22	0.35
1.0	0.60	0.61	0.89
1.0	0.60	0.61	0.69
1.0	0.60	0.70	0.73
1.0	0.60	0.67	0.66
1.25	0.75	0.82	0.98
1.25	0.75	0.94	0.92

TABLE 9. P&A DATA FOR GB IPA EXTRACTION OF DWS SAMPLES

GB P&A DATA SOLID-COUPONS			
DWS	Initial Agent (ng)	Day 1 Recovered Agent (ng)	Day 2 Recovered Agent (ng)
0.00	0.00	0.00	0.00
0.00	0.00	0.00	0.00
0.50	0.30	0.23	0.23
0.50	0.30	0.28	0.26
0.50	0.30	0.29	0.27
0.50	0.30	0.24	0.18
1.00	0.60	0.49	0.56
1.00	0.60	0.52	0.49
1.00	0.60	0.47	0.60
1.00	0.60	0.57	0.54
1.25	0.75	0.60	0.70
1.25	0.75	0.56	0.52

TABLE 9. P&A DATA FOR GB IPA EXTRACTION OF DWS SAMPLES (CONTINUED)

GB P&A DATA COUPONS-FILINGS			
DWS	Initial Agent (ng)	Day 1 Recovered Agent (ng)	Day 2 Recovered Agent (ng)
0.00	0.00	0.00	0.00
0.00	0.00	0.00	0.00
0.50	0.30	0.23	0.17
0.50	0.30	0.33	0.14
0.50	0.30	0.31	0.14
0.50	0.30	0.18	0.13
1.00	0.60	0.45	0.67
1.00	0.60	0.52	0.64
1.00	0.60	0.69	0.51
1.00	0.60	0.51	0.50
1.25	0.75	0.73	0.47
1.25	0.75	0.56	0.59

TABLE 10. P&A DATA FOR HD IPA EXTRACTION OF DWS SAMPLES

HD P&A DATA SOLID-COUPONS			
DWS	Initial Agent (ng)	Day 1 Recovered Agent (ng)	Day 2 Recovered Agent (ng)
0.00	0.00	0.00	0.00
0.00	0.00	0.00	0.00
0.50	8.06	10.31	3.37
0.50	8.06	4.06	5.10
0.50	8.06	3.84	4.21
0.50	8.06	4.30	4.32
1.00	16.13	46.67	15.93
1.00	16.13	71.90	15.40
1.00	16.13	20.98	14.71
1.00	16.13	134.22	15.66
1.25	20.16	103.77	19.75
1.25	20.16	128.29	16.94

TABLE 10. P&A DATA FOR HD IPA EXTRACTION OF DWS SAMPLES (CONTINUED)

HD P&A DATA COUPONS-FILINGS			
DWS	Initial Agent (ng)	Day 1 Recovered Agent (ng)	Day 2 Recovered Agent (ng)
0.00	0.00	0.00	0.00
0.00	0.00	0.00	0.00
0.50	8.06	5.37	6.90
0.50	8.06	6.15	6.00
0.50	8.06	6.31	6.38
0.50	8.06	4.54	8.75
1.00	16.13	12.78	12.14
1.00	16.13	13.24	12.60
1.00	16.13	12.68	15.47
1.00	16.13	12.92	15.24
1.25	20.16	19.13	26.89
1.25	20.16	14.83	22.68

APPENDIX C

FIGURES

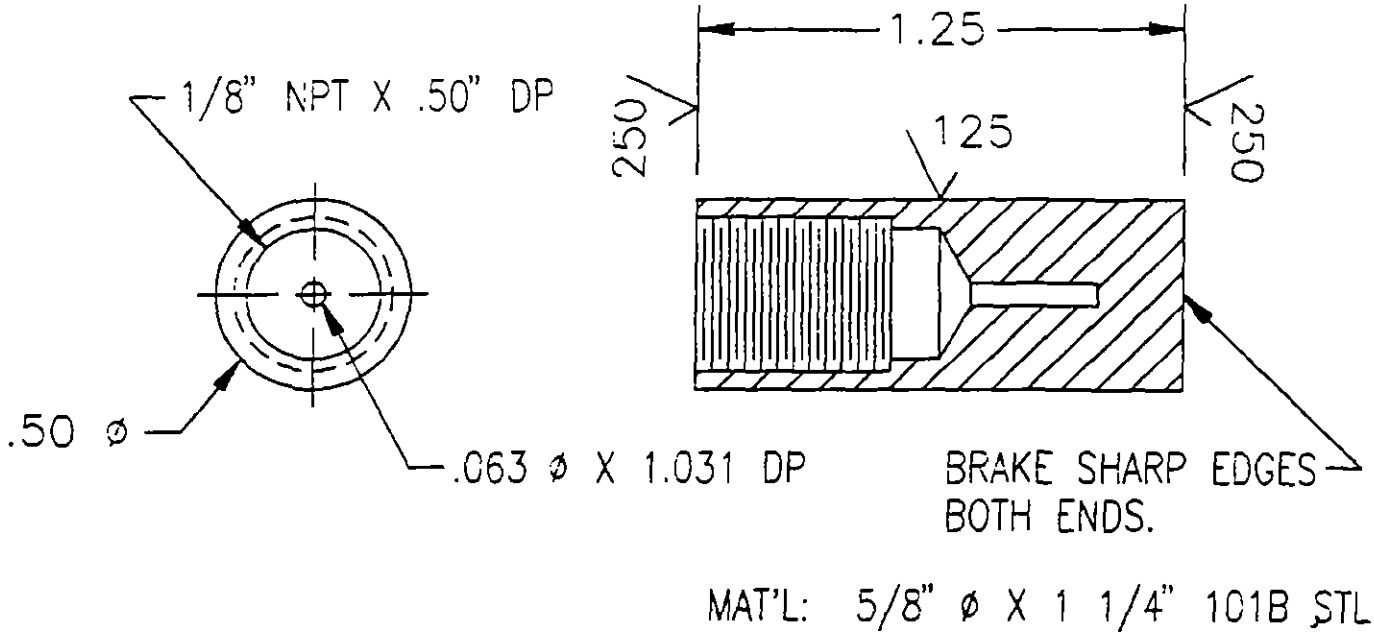

A – Preliminary Test Coupon

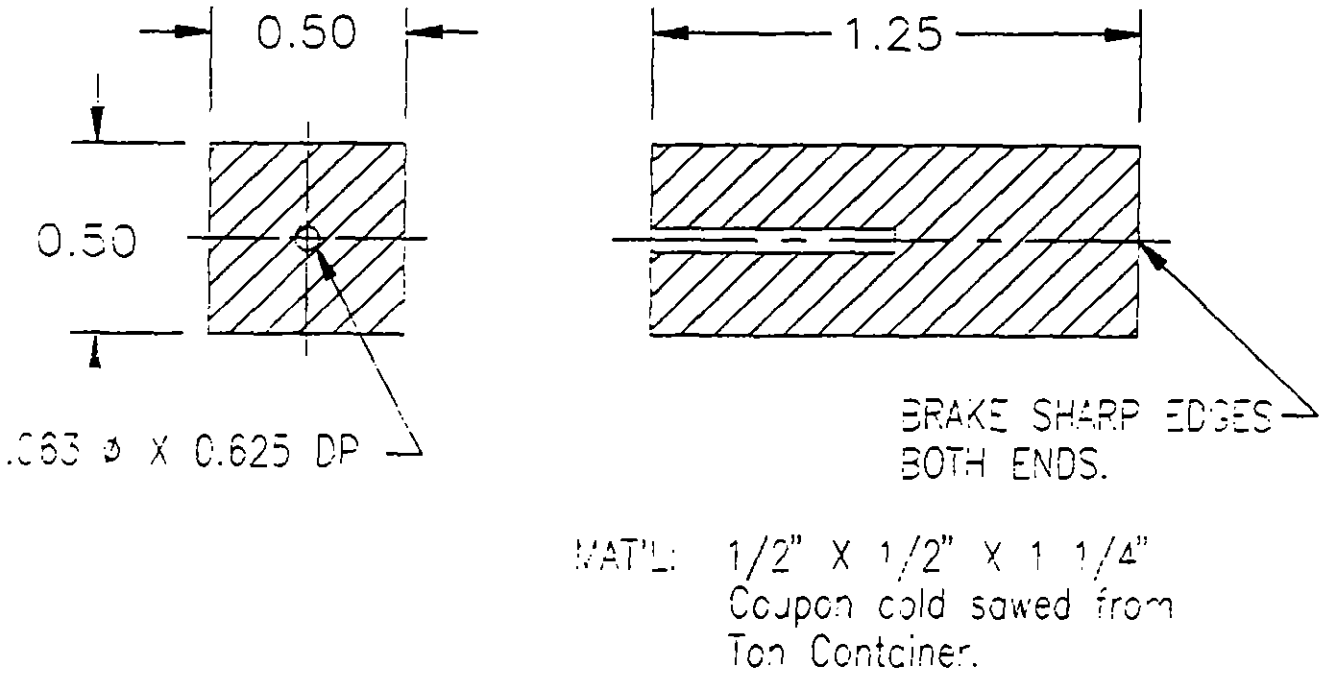

B – Field Test Coupon

FIGURE 1. 5X TEST COUPON
D B–1

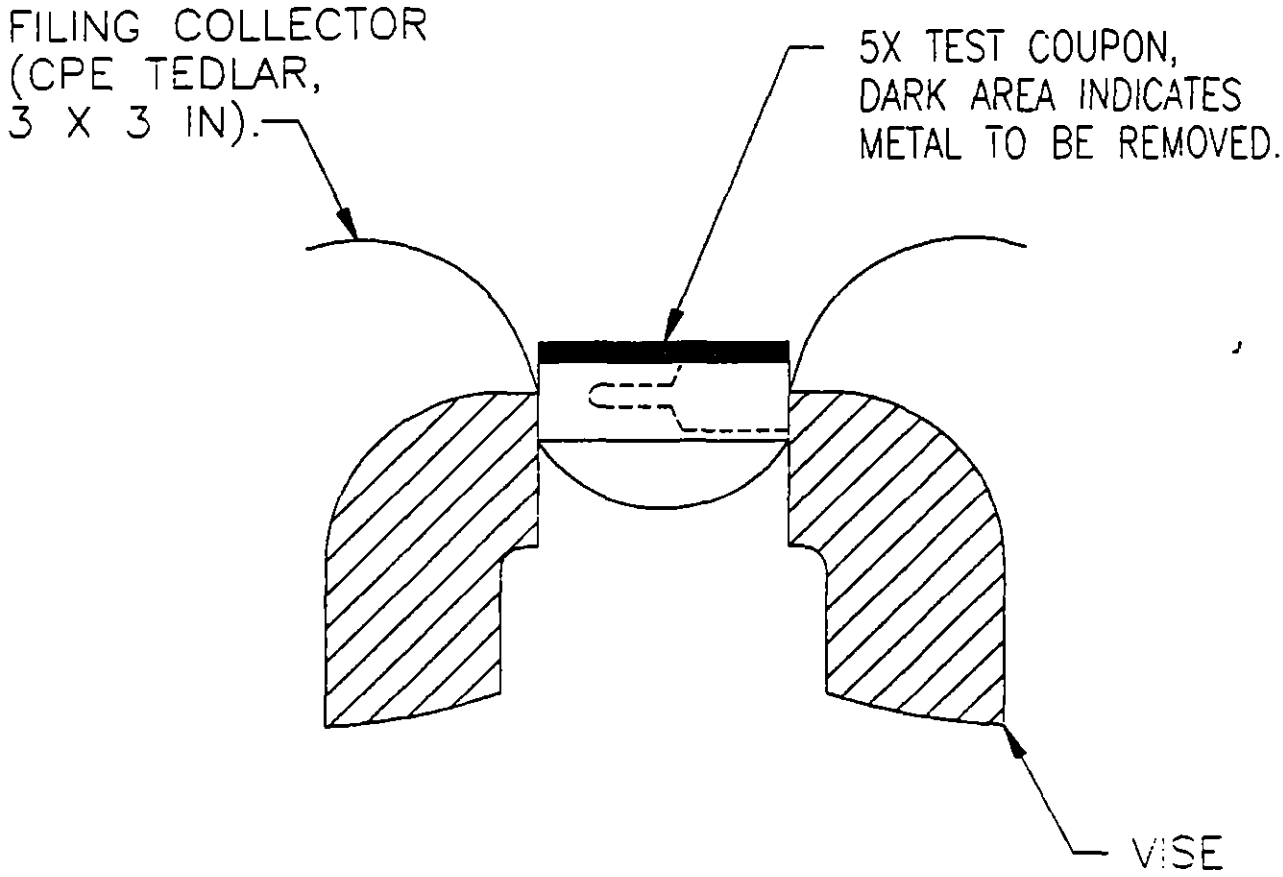

REMOVE 1/16" OF MATERIAL
FROM TEST COUPON PER SAMPLE.

FIGURE 2. STEEL FILING SAMPLE
D B-3

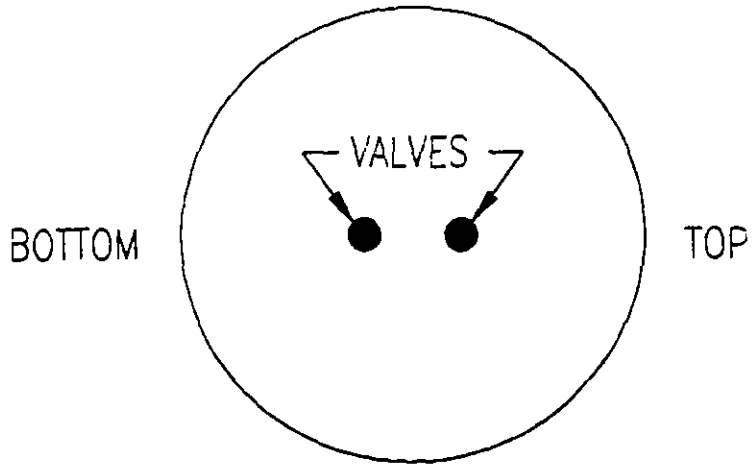

TON CONTANER
END VIEW

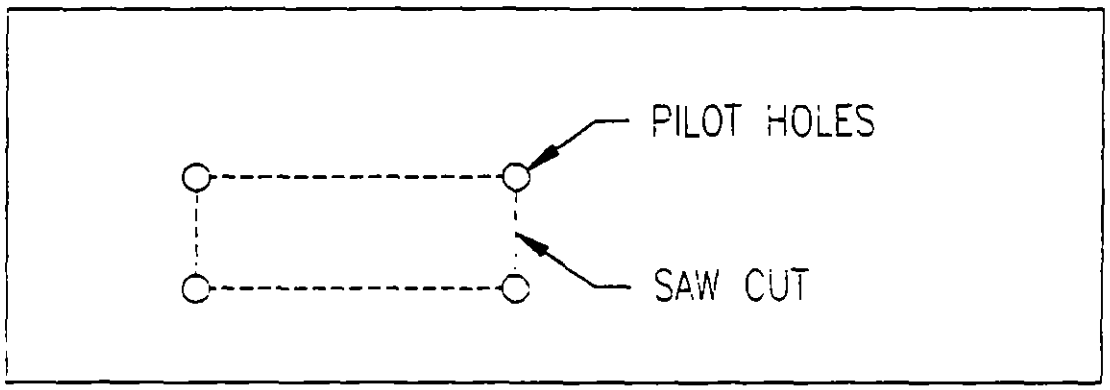

TON CONTAINER
BOTTOM VIEW

1. SAMPLE TO BE TAKEN FROM BOTTOM OF TON CONTAINER.

2. DRILL PILOT HOLES THEN CUT OUT SAMPLE WITH A RECIPROCATING SAW.

FIGURE 3. TON CONTAINER COUPON SCHEMATIC
D B-5

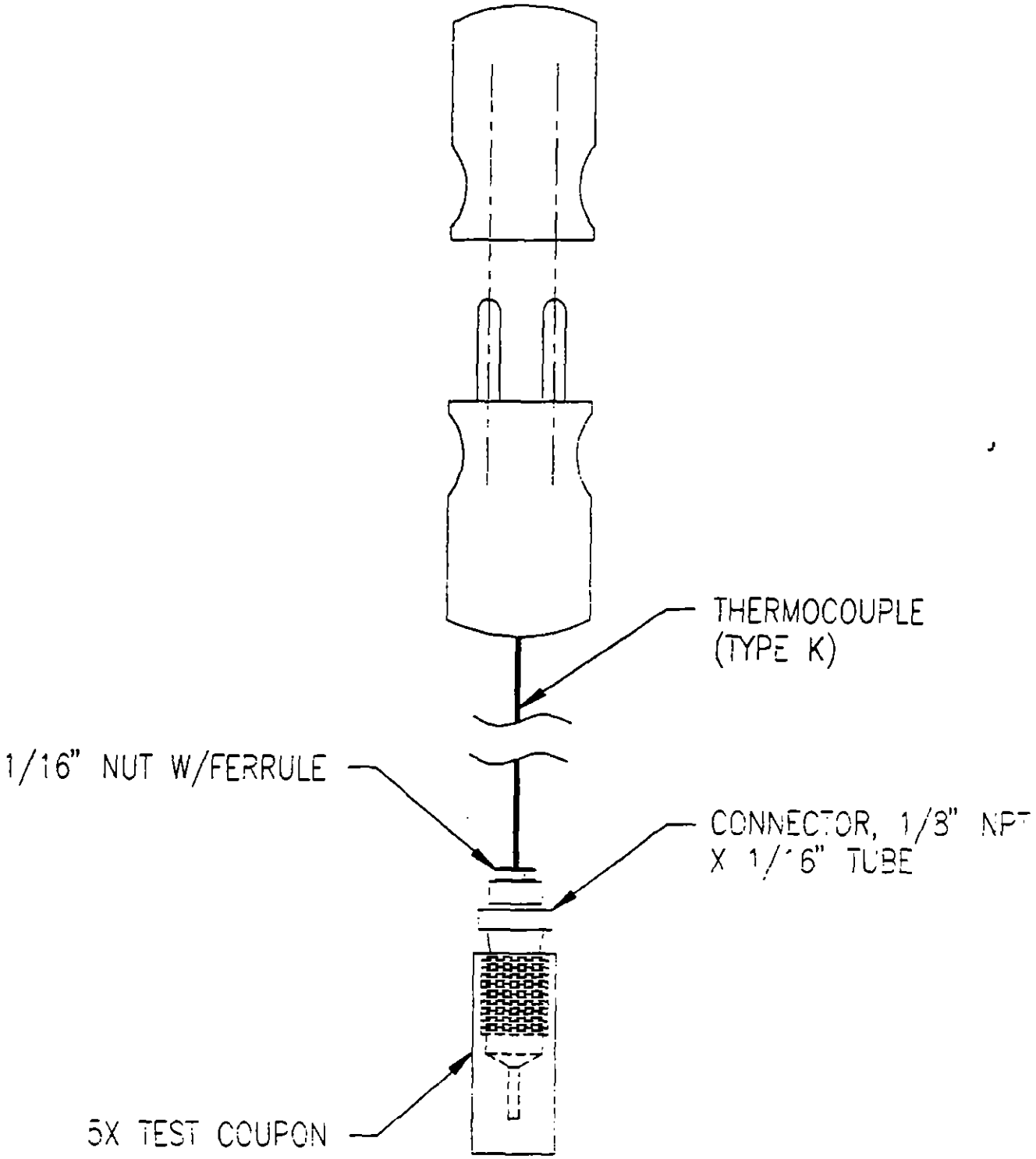

FIGURE 4. FLARELESS TUBE FITTING CONNECTION
D B-2

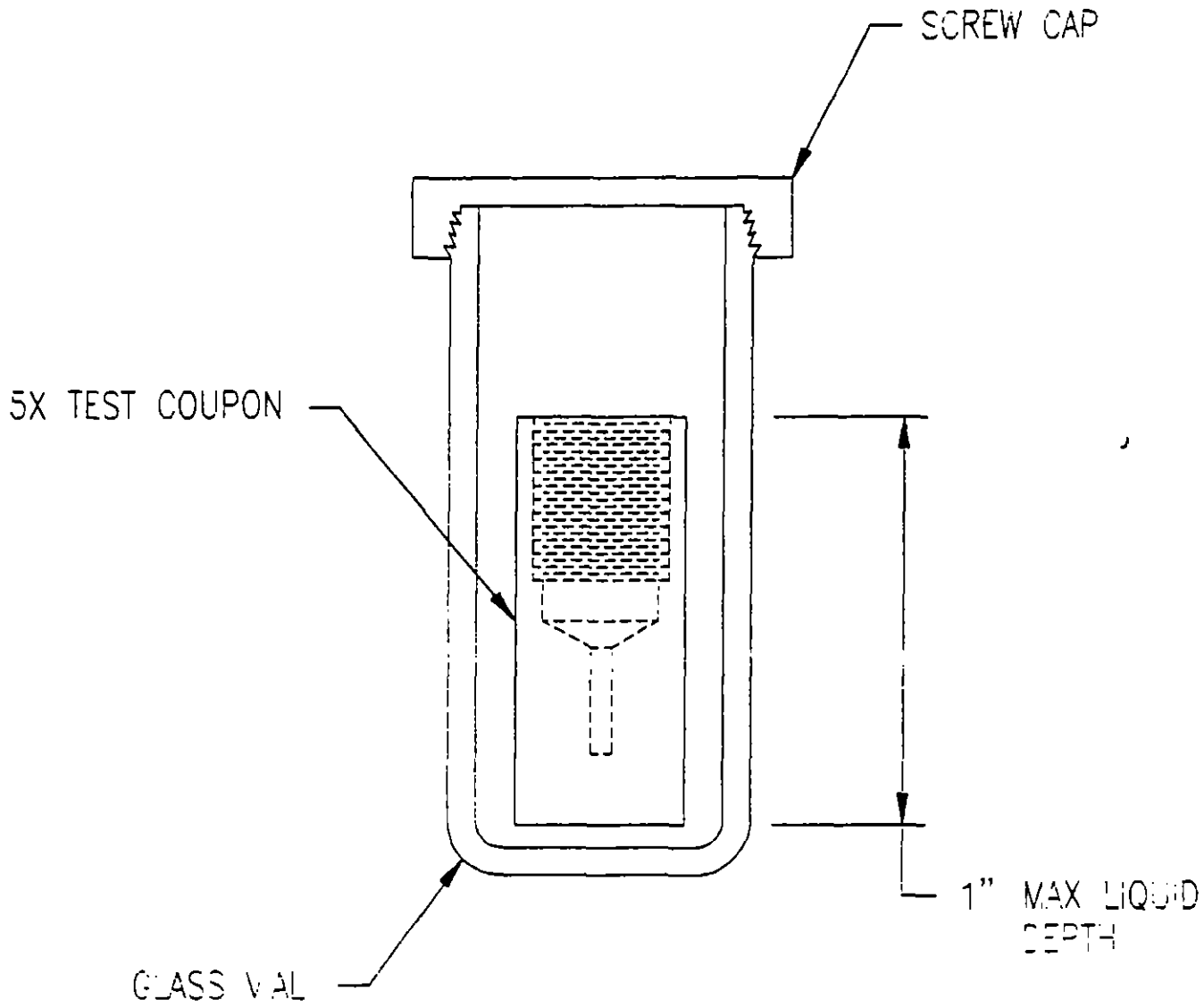

FIGURE 5. SOAK SCHEMATIC
D B-4

APPENDIX D

ABBREVIATIONS, ACRONYMS, AND DEFINITIONS

ABBREVIATIONS AND ACRONYMS

%	Percent
&	And
° C	Degrees Centigrade
° F	Degrees Fahrenheit
ACAMS	Automatic Continuous Air Monitoring System
AR	Army Regulation
ASTM	American Society for Testing and Materials
AVG	Average
BCC	Body Centered Cubic
CAMDS	Chemical Agent Munitions Disposal System
cm	Centimeter
CMO	Control Module Operator
CSDP	Chemical Stockpile Disposal Program
DA	Department of the Army
DAAMs	Depot Area Air Monitoring System
DECON	Decontamination
DEMIL	Demilitarization
DOD	Department of Defense
DPE	Demilitarization Protective Ensemble
DWS	Drinking Water Standard
EPA	United States Environmental Protection Agency
FCC	Face Centered Cubic
ft	Foot
FPD	Flame Photometric Detector
g	Gram
GB	Isopropyl Methyl Phosphonofluoridate (Sarin)
GC	Gas Chromatography
GPL	General Population Level
H	Levinstein Mustard, 70% bis(2-chloroethyl) Sulfide and 30% Polysulfides, Vesicant Agent
HCP	Hexagonal Close Packed
HD	Distilled Mustard, Distilled 70% bis(2-chloroethyl) Sulfide, Vesicant Agent
hr(s)	Hour(s)
IDLH	Immediately Dangerous to Life and Health
in.	Inch
IPA	Isopropanol
kg	Kilogram(s)
L	Liter(s) or Lewisite (40% bis [2(2-chloroethlthio)ethyl] ether)

ABBREVIATIONS AND ACRONYMS

LOQ	Limit of Quantification
LQCPP	Laboratory Quality Control Plan and Procedures
m^3	Cubic Meter
Max	Maximum
MDF	Multi-Purpose Demilitarization Facility
mg	Milligram
mg/L	Milligram/Liter
mg/m^3	Milligram per Cubic Meter
min	Minimum or Minute
mL	Milliliter
mm	Millimeter
MON	Monitors
N/A	Not Applicable
nd	Non-Detectable
ng	Nanogram(s)
P&A	Precision and Accuracy
pm	picometers
ppm	parts per million
PMCD	Program Manager for Chemical Demilitarization
QA/QC	Quality Assurance/Quality Control
RCRA	Resource Conservation and Recovery Act
RD&D	Research, Development and Demonstration
RDTE	Research, Development, Test, and Evaluation
s or sec	Second
SAF	Sample Analysis Facility
SOP	Standing Operating Procedure
STD	Standard
TC(s)	Ton Container(s)
TDP	Technical Data Package
TEAD	Tooele Army Depot
TWA	Time Weighted Average
ug or µg	Microgram(s)
uL or μL	Microliter
USACAMDS	United States Army Chemical Agent Munitions Disposal System
VX	o-Ethyl, S-(diisopropylaminoethyl) methylphosphonothiolate, Chemical Agent

DEFINITIONS

Laboratory Quality Control Plan and Procedures for the Chemical Stockpile Disposal Program (LQCPP), Revision 4, 20 September 1993

3X. Three "X"s indicate that the item has been surface decontaminated by locally approved procedures(if required), bagged or contained, and that appropriate tests or monitoring has verified that TWA vapor concentrations of 0.0001 mg/m^3 for agent GB, 0.003 for agent HD mustard and Lewisite, and 0.00001 mg/m^3 for agent VX do not exist.

5X. Five "X"s indicate that the item is agent-free and may be released from government control without precautions or restrictions. An approved method of achieving the 5X level is to subject items for a sufficient time to a sufficient temperature (minimum 1000° F for 15 minutes) to destroy the agent completely.
A 5X condition must be certified by the Commander's designated representative.

Drinking Water Standard (DWS). The existing DWS was developed to meet militarily strategic need to determine safe drinking water concentrations for troops performing missions in the field. The DWS assumes exposure only to healthy adult combat personnel between the ages of 18 and 45, where the period of consumption of seven consecutive days at a rate of five liters (1.3 gallon) per day.

General Population Limit (GPL). The allowable 72 hour time weighted average concentration for indefinite unprotected exposure (i.e., 24 hours per day, seven days per week for a 70 year lifetime) of the general public without adverse health effects.

Immediately Dangerous to Life and Health. (IDLH) The maximum concentration from which, in the event of respirator failure, one could escape within 30 minutes without a respirator and without experiencing any escape-impairing (e.g., severe eye irritation) or irreversible health effects. These values were determined during the Standards Completion Program only for the purpose of respirator selection (i.e., the requirement for wearing self-contained breathing apparatus or supplied air respirator devices).

Limit of Quantification (LOQ). The lowest (target) analyte concentration that 97.5% (1-B) of the time results in 97.5% (1-A) confidence that the agent is detected by the method or monitoring system. In this instance, B is the risk that agent is present but not quantified by the method or monitor, and A is the risk that agent is quantified by the method or monitor when no agent is present. This limit can be determined graphically from the upper and lower limits of the 95% confidence interval around the regression line.

DEFINITIONS

QL. A QL is a QC sample that has been spiked with a solution of analyzed dilute chemical agent and is aspirated long enough to remove any residual solvent. QL samples are used to verify calibration status of DAAMS GCs by detecting a specific mass on a column, given a known spike mass. The QL's mass should be within ±15% of the known spike mass.

QP. A QP is a QC sample that has been spiked with a solution of analyzed dilute chemical agent and exposed to plant atmosphere. The QP's spike concentration will be ±10% of 1.0 monitoring level (Z). The QP is used to assess the performance of both the ACAMS and DAAMS methods. The QP's concentration, must be ±25% of the monitoring level (i.e., the target concentration). DAAMS tubes are spiked with a QP standard at the laboratory and then carried to the monitoring station. At the station, the tube is aspirated for the amount of time prescribed by the method. It is then returned to the laboratory for analysis.

Time Weighted Average (TWA). The airborne concentration to which unprotected workers may be repeatedly exposed for eight hours per day, five days per week, for a working lifetime without adverse health effects. This monitoring level is operationally treated as a ceiling value for the purpose of masking workers at demilitarization facilities. The TWA is also used to indicate that a given item has been surface decontaminated by locally approved procedures and that monitoring results have shown agent vapor concentration is below one TWA.

APPENDIX E

REFERENCES

REFERENCES

The following documents may be referenced:

1. Test Plan 32-57, *5X Agent (VX, GB, and HD) Destruction Verification*, Revision 1, 13 August 94, and Addendum #1, 28 July 95.

2. *Test Report for 5X Agent (VX) Decontamination Verification*, Test Report 32-57, Woodrow T. Lash and Gemard W. Drayer, USACAMDS, 25 July 1994.

3. SFIL-CDE-PCS, MFR, Subject: *Minutes of Meeting*, Test Plan 32-57.

4. SFIL-CDE-PCS, MFR, Subject: *5X Test Plan*, Don E. Barclay, 6 May 1994.

5. Utah State Letter Regarding Comments on 5X Test Plan, Dennis R. Downs, 15 April 1994.

6. SFIL-CDE-PCML-A, *Lab Procedures for 2-propanol Solvent Extraction.*

7. Laboratory Quality Control Plan and Procedures for the Chemical Stockpile Disposal Program (LQCPP), Revision 4, 20 September 1993.

8. Technical Bulletin TB MED 577, *Drinking Water Standards*, March 1986.

9. USACAMDS Reg. 50-1, Appendix B, *Drinking Water Standards.*

10. AR 385-61, *Army Toxic Chemical Safety Agent Program.*

11. DA PAM 385-61, *Toxic Chemical Agent Safety Standards.*

12. All appropriate Analytical Branch Laboratory SOPs.

Background Document H, Reference 2

Department of the Army, undated, "Toxic Chemical Safety Standards," DA PAM 385-61, undated draft.

See Preamble, Reference 10

TOOELE CHEMICAL AGENT
DISPOSAL FACILITY
(TOCDF)

RCRA AGENT GB TRIAL BURN REPORT FOR THE DEACTIVATION FURNACE SYSTEM (DFS)

EG&G DEFENSE MATERIALS, INC.
APRIL 9, 1997

EXECUTIVE SUMMARY

Under Congressional mandate, the Department of the Army must dispose of existing stocks of obsolete chemical warfare agent munitions. The Army is conducting a series of agent trial burns at the Tooele Chemical Agent Disposal Facility (TOCDF) site using five incineration systems to safely destroy the existing stockpile.

EG&G Defense Materials Inc. (EG&G) is responsible for operating the TOCDF and conducting the Agent Trial Burns (ATB) on each of the furnace systems. An ATB was conducted with the Deactivation Furnace System (DFS) in January 1997 to demonstrate a destruction and removal efficiency (DRE) for Agent GB while processing M55 rockets containing residual Agent GB in accordance with the State of Utah permit and Title 40 Code of Federal Regulations Part 264 (40 CFR 264) Resource Conservation and Recovery Act (RCRA) regulations. A DRE for polychlorinated biphenyls (PCBs) was also determined in accordance with the Toxic Substances Control Act (TSCA) requirements. The DFS ATB was also used to demonstrate the performance of the DFS and ancillary pollution abatement system (PAS) with respect to compliance parameters and the ability to control emissions. During this DFS ATB, four performance runs were conducted, but only 3 are reported due to sampling problems during one performance run. TRC Environmental Corporation (TRC) provided sampling and analysis support to EG&G for the DFS ATB.

This document is a summary of the testing conducted in accordance with the approved *GB Agent Trial Burn Plan for the Deactivation Furnace System (DFS)*, dated June 6, 1996, and revised December 12, 1996, and the *TSCA Final Demonstration Test Plan* dated April 8, 1996. Information specific to the TSCA Demonstration Plan will be presented in a TSCA Report submitted to EPA.

This ATB report presents the results of the performance runs conducted on January 7, 10, and 11, 1997. During these performance runs, M55 rockets were processed at an average of 35 rockets per hour. The rockets were punched and drained of Agent GB prior to entering the DFS retort. However, a residual quantity of agent remains with the rocket parts requiring a DRE to be demonstrated for Agent GB in accordance with the State of Utah permit and 40 CFR 264 regulations. Other performance standards were also required to be demonstrated in accordance with the facility's permit. Because of the presence of PCBs in the M55 shipping/firing tubes, it was necessary to determine system performance with regard to the TSCA, 40 CFR 761. The DFS agent trial burn program demonstrated:

- The DFS can meet the emissions and performance standard criteria established in the permit issued by the State of Utah covering the unit as summarized in Table 1-1;

- The conformance of the DFS to TSCA performance standards;

- Certain other parameters which indicated the performance of the unit while burning Agent GB;

- The chemical and physical nature of liquid effluent from the unit's PAS; and

- The chemical and physical nature of solid residues generated from the system.

Specific parameters which were characterized for the DFS and PAS are presented in Section 1.2 of the Report. The results of the agent trial burn are summarized in Table 1-1 and in subsequent sections. All exhaust gas sampling was conducted at the horizontal duct located between the induced draft fan and the common stack. A total of four performance runs were conducted. The results of three of these performance runs (Runs 1, 3, and 4) are reported in this document for demonstrating the performance of the system. Run 2 was voided due to difficulties in maintaining proper sampling temperatures in two of the trains.

Emissions of PM, HCl, Agent GB, and CO were all well within the State of Utah permit limits established for the DFS. Agent destruction exceeded the RCRA minimum DRE of 99.99 percent, with an average DRE that was greater than 99.9999 percent. Particulate emissions were well below the RCRA limits of 180 milligrams per dry standard cubic meter (mg/dscm) at 7% O_2 and 48.3 mg/dscm at 7% O_2 per the Air Approval Order limits, with an average rate of 8.5 mg/dscm at 7% O_2. The HCl emissions were below the Practical Quantitation Limit (PQL), with an average emission rate of <0.04 lbs per hour. Emission of metals were generally below the values used in the health risk assessment, although three were slightly higher. Emission rates for PCBs were below the emission rates used for the health risk assessment. These and other emissions and process performance data are presented in the following report.

TABLE OF CONTENTS

EXECUTIVE SUMMARY ES-1

LIST OF APPENDICES iv
LIST OF TABLES v
LIST OF FIGURES vi
LIST OF ACRONYMS vii
LIST OF UNITS AND MEASUREMENTS ix
LIST OF CHEMICAL SYMBOLS AND FORMULAS x
LIST OF IDENTIFICATION CODES FOR PDARS INSTRUMENTS xii

1.0 INTRODUCTION 1
1.1 BACKGROUND 1
1.2 OBJECTIVES OF THE TEST PROGRAM AND SCOPE OF WORK 1
1.3 SAMPLING AND ANALYTICAL METHODS 4
1.4 DESCRIPTION OF PERFORMANCE RUNS 7
1.5 REPORT ORGANIZATION 7

2.0 SUMMARY AND DISCUSSION OF RESULTS 8
2.1 EQUIPMENT CALIBRATION 8
2.2 PERFORMANCE RUN CHRONOLOGY 8
2.3 DEVIATIONS FROM THE PLAN 15
2.4 AGENT GB FEED RATES AND EMISSION RATES 15
2.4.1 Agent GB Characterization 16
2.4.2 DAAMS Tube Analysis 16
2.4.3 Destruction and Removal Efficiencies (DREs) 18
2.5 EXHAUST GAS EMISSION RESULTS 22
2.5.1 Particulate Matter Emissions 22
2.5.2 HCl and HF Emissions 25
2.5.3 Volatile Organic Emissions 25
2.5.4 Volatile TOC Emissions 25
2.5.5 Semi-Volatile Organic Emissions 25
2.5.6 Semi-Volatile TOC Emissions 41
2.5.7 PCDD/PCDF Emissions 41
2.5.8 PCB Emissions 45
2.5.9 Energetic Emissions 45
2.5.10 Metals Emissions 45
2.5.11 Hexavalent Chromium Emissions 53

TABLE OF CONTENTS (Continued)

2.5.12 Bulk Gas Constituents 53
2.5.13 Carbon Monoxide 53
2.5.14 Cyclonic Flow Checks 53
2.6 PROCESS STREAM RESULTS 55
2.6.1 Volatile Organics 55
2.6.2 Semi-volatile Organics 55
2.6.3 PCBs 55
2.6.4 PCDD/PCDF 76
2.6.5 Metals 76

3.0 PROCESS OPERATING CONDITIONS 85
3.1 DEACTIVATION FURNACE AND POLLUTION ABATEMENT SYSTEM 85
3.1.1 Rotary Kiln System (Primary Combustion Chamber) 85
3.1.2 Cyclone 86
3.1.3 Afterburner (AFB) 86
3.1.4 Pollution Abatement System 86
3.2 PROCESS CONTROLS AND MONITORS 88
3.2.1 PDARS Data Summary 88
3.2.2 Automatic Waste Feed Cutoffs 88

4.0 EXHAUST GAS AND PROCESS STREAM SAMPLING PROCEDURES 95
4.1 DFS EXHAUST DUCT SAMPLING 95
4.1.1 M1/M2 - Velocity Measurements and Cyclonic Flow 95
4.1.2 M4 - Moisture Determination 97
4.1.3 M0050 - Particulate Matter/Hydrogen Chloride/Hydrogen Fluoride . 98
4.1.4 M0030 - Volatile Organic Compounds 99
4.1.5 M0010 - Semi-Volatile Organic Compounds 99
4.1.6 M0010 - Semi-Volatile and Non-Volatile Total Organic Compounds 101
4.1.7 M0040 - Volatile Total Organic Compounds 102
4.1.8 M0023A - PCDDs/PCDFs 103
4.1.9 M23 - PCBs 104
4.1.10 STEM - Energetic Compounds 105
4.1.11 Multiple Metals and Phosphorus 106
4.1.12 MCr^{+6} - Hexavalent Chromium 111
4.1.13 M3 - Oxygen and Carbon Dioxide Determination 113
4.1.14 EPA M10 - Carbon Monoxide 113
4.1.15 Depot Area Air Monitoring System (DAAMS) 114
4.2 PROCESS SAMPLING 114

TABLE OF CONTENTS (Continued)

5.0 EXHAUST GAS AND PROCESS STREAMS ANALYSIS PROCEDURES 116
5.1 PROCESS STREAM SAMPLES 116
5.1.1 Agent Analyses Method 116
5.1.2 Agent Characterization Methods 116
5.1.3 Inorganic Analysis Methods 118
5.1.4 Organic Compound Analysis Methods 118
5.2 EXHAUST GAS SAMPLE ANALYSIS 118
5.2.1 Analysis of Hydrogen Halide Emissions (HCl/HF) 119
5.2.2 Analysis of Particulate Matter 119
5.2.3 VOST Analysis Method 119
5.2.4 Analysis of M0010 - Semi-Volatile Organic Compounds 119
5.2.5 Analysis of M0010/M0040 - Total Organics 120
5.2.6 Analysis of M0023A - PCDDs/PCDFs 122
5.2.7 Analysis of M23 - Polychlorinated Biphenyls 123
5.2.8 Analysis of STEM - Energetic Compounds NG, TNT, and RDX . . 123
5.2.9 Analysis of Multi-Metals Sampling Train - HRA Metals and Phosphorus 124
5.2.10 Analysis of MCr^{+6} - Hexavalent Chromium 124
5.2.11 Analysis of M3 - O_2 and CO_2 124
5.2.12 Analysis of M10 - CO 125
5.2.13 DAAMS Tube Analysis 125

6.0 QUALITY ASSURANCE/QUALITY CONTROL SUMMARY 126
6.1 SAMPLE COLLECTION 126
6.1.1 Sample Containers and Reagents 127
6.1.2 Process Samples 127
6.1.3 Exhaust Gas Samples 127
6.2 SAMPLE DOCUMENTATION 128
6.3 SAMPLE MANAGEMENT 128
6.3.1 Sample Transportation and Receiving 128
6.3.2 Sample Preservation 129
6.3.3 Sample Holding Times 129
6.4 SAMPLE ANALYSIS 129
6.5 COMPARABILITY, REPRESENTATIVENESS, AND COMPLETENESS . 130
6.6 AUDIT SAMPLE RESULTS 131

7.0 CONCLUSIONS 137

LIST OF APPENDICES

APPENDIX A - COMPLIANCE CALCULATIONS

APPENDIX B - EXHAUST GAS EMISSIONS SURVEY
- Annex A Location of Sampling Points
- Annex B Exhaust Gas Flows and Sampling Data
- Annex C Equipment Calibration Data
- Annex D Field Data Sheets
- Annex E Particulate Gravimetric Data
- Annex F Cyclonic Flow Data

APPENDIX C - OPERATING PARAMETERS/WINTREND DATA
- Annex A Run 1
- Annex B Run 2
- Annex C Run 3
- Annex D Run 4

APPENDIX D - PDARS AND AWFCO DATA
- Annex A PDARS Data
  - Section 1 Run 1
  - Section 2 Run 2
  - Section 3 Run 3
  - Section 3 Run 4
- Annex B AWFCO Data

APPENDIX E - QA/QC REPORT
- Annex A VOST Sorbent Tube Certificates of Analysis and COC Form
- Annex B XAD Resin Screen Data Sheets
- Annex C Surveillance Reports

APPENDIX F - AGENT CHARACTERIZATION DATA

APPENDIX G - DAAMS SAMPLING AND ANALYSIS DATA

APPENDIX H - FUEL ONLY RUN DATA

APPENDIX I - AIR TOXICS ANALYTICAL DATA

APPENDIX J - QUANTERRA ANALYTICAL DATA

LIST OF TABLES

1-1 Program Emissions Compliance Summary . . . 3
2-1 Calibration Status of RCRA Instruments . . . 9
2-2 Sampling Time Summary . . . 10
2-3 Agent GB Characterization . . . 17
2-4 DFS GB ATB Agent DRE . . . 19
2-5 Particulate Matter Emissions Summary . . . 24
2-6 Hydrogen Chloride and Hydrogen Fluoride Emissions Summary . . . 26
2-7 Volatile Emissions Summary . . . 27
2-8 Volatile TOC Emissions Summary . . . 31
2-9 Semi-Volatile Organics Emissions Summary . . . 32
2-10 Semi-Volatile/Non-Volatile TOC Emissions Summary . . . 42
2-11 Dioxin/Furan Emissions Summary . . . 43
2.12 PCB Emissions Summary . . . 46
2-13 Energetic Materials Emissions Summary . . . 47
2-14 Metals Emissions Summary . . . 51
2-15 Hexavalent Chromium Emissions Summary . . . 54
2-16 Process Stream Volatile Organics Summary . . . 56
2-17 Process Stream Semi-Volatile Organics Summary . . . 65
2-18 Process Streams Polychlorinated Biphenyl Summary . . . 73
2-19 Process Stream Dioxin/Furan Summary . . . 77
2-20 Process Stream Metals Summary . . . 81
3-1 PDARS Data Summary . . . 89
3-2 DFS AWFCO Summary . . . 92
4-1 Exhaust Gas Sampling Summary . . . 96
4-2 DFS Exhaust Duct Traverse Sampling Points . . . 97
4-3 Process Samples . . . 115
5-1 Analytical Methods . . . 117
5-2 Target Analyte List for Agent Characterization . . . 118
6-1 VOST Audit Results . . . 132
6-2 DFS Semi-Volatile Organic Compound Audit Results . . . 133
6-3 PCB Audit Results . . . 134
6-4 Total HRA Metal Audit Results . . . 135
6-5 Energetic Compound Audit Results . . . 136

LIST OF FIGURES

2-1 DFS Exhaust Duct Sampling Locations 23
4-1 STEM Front Section Recovery 107
4-2 STEM Impinger Section Recovery 108
4-3 STEM Resin Module Recovery 109
4-4 STEM Final Rinse Recovery 110

LIST OF ACRONYMS

ACAMS	Automatic Continuous Air Monitoring System
AEHA	Army Environmental Hygiene Agency
AFB	Afterburner
AQS	Agent Quantitation System
ASC	Allowable Stack Concentration
ATB	Agent Trial Burn
AWFCO	Automatic Waste Feed Cutoff
BP	Barometric Pressure
CCC	Calibration Check Compounds
CA	Caustic Makeup (NaOH)
CAL	Chemical Assessment Laboratory
CB	Cyclone Bin Residue
CD	Stack Condensate
CEMS	Continuous Emissions Monitoring System
CFR	Code of Federal Regulations
COC	Chain-of-Custody
CVAAS	Cold Vapor Atomic Absorption Spectroscopy
DAAMS	Depot Area Air Monitoring System
DDAFC	DAAMS Dilution Air Flow Controller
DSHW	Department of Environmental Quality (State of Utah), Division of Solid & Hazardous Waste
DFS	Deactivation Furnace System
DI	Deionized (as in deionized water)
DRE	Destruction and Removal Efficiency
EPA	U.S. Environmental Protection Agency
FID	Flame Ionization Detector
GC/FID	Gas Chromatography/Flame Ionization Detector
GC/MS	Gas Chromatography/Mass Spectrometry
HDC	Heated Discharge Conveyor
HRA	Health Risk Assessment
HRGC/HRMS	High Resolution Gas Chromatograph/High Res. Mass Spectrometer
IC	Ion Chromatography
IC/PCR	Ion Chromatography/Post Column Reactor
ICP	Inductively Coupled Plasma
ICP/MS	Inductively Coupled Plasma/Mass Spectrometry
ICS	Interference Check Sample
ID	Induced Draft
LCS	Laboratory Control Sample
LIC	Liquid Incineration System
LOQ	Limit of Quantitation

LIST OF ACRONYMS (Continued)

MDL	Method Detection Limit
MS	Matrix Spike
MSD	Matrix Spike Duplicate
N	Normality
PAS	Pollution Abatement System
PDARS	Process Data Acquisition and Recording System
PIC	Products of Incomplete Combustion
PLC	Programmable Logic Controllers
POHC	Principal Organic Hazardous Constituents
PW	Process Water
QA	Quality Assurance
QAPP	Quality Assurance Project Plan
QC	Quality Control
RCRA	Resource Conservation and Recovery Act
RPD	Relative Percent Difference
RF	Response Factor
RSD	Relative Standard Deviation
RSM	Rocket Shear Machine
SAP	Sampling and Analysis Plan
SPCC	System Performance Check Compounds
SR	Scrubber Recirculation Brine
STEM	Sampling Train for Energetic Materials
SVOC	Semi-volatile Organic Compound
SVTOC	Semi-volatile Total Organic Compounds
TCLP	Toxicity Characteristic Leaching Procedure
TCO	Total Chromatagraphable Organics
TDS	Total Dissolved Solids
TEF	Toxic Equivalency Factor
TEQ	Toxic Equivalent
TIC	Tentatively Identified Compound
TOC	Total Organic Compounds
TOCDF	Tooele Chemical Agent Disposal Facility
TSDF	Treatment, Storage, and Disposal Facility
UAC	Utah Administrative Code
USACHPPM	United States Army Center for Health Promotion and Preventative Medicine
VMSTD	Sample Volume of Air @ STP
VOA	Volatile Organic Analysis
VOCs	Volatile Organic Compounds
VOST	Volatile Organic Sampling Train
VTOC	Volatile Total Organic Compounds

LIST OF UNITS AND MEASUREMENTS

acfm	Actual Cubic Foot Per Minute
atm	Atmospheres
cp	CentiPoise
cfm	Cubic Feet Per Minute
°C	Degree Centigrade
°F	Degree Fahrenheit
D	Dalton
dscf	Dry Standard Cubic Foot
dscfm	Dry Standard Cubic Foot Per Minute
dscm	Dry Standard Cubic Meters
ft	Foot
g	Grams
g/hr	Grams Per Hour
g/s	Grams Per Second
gal	Gallon
gal/hr	Gallons Per Hour
gpm	Gallons Per Minute
gr	Grain
gr/dscf	Grains Per Dry Standard Cubic Foot (1 atm, 68°F)
in. Hg	Inches of Mercury
in.wc	Inches of Water Column
L	Liter
L/m	Liters Per Minute
μg	Microgram
mg	Milligram
mg/m^3	Milligrams Per Cubic Meter
mg/dscm	Milligrams Per Dry Standard Cubic Meter
mL	Milliliters
mm	Millimeter
ng	Nanograms
ppb	Parts per Billion
ppm	Parts Per Million
ppmdv	Parts Per Million on a Dry Volume Basis
ppt	Parts Per trillion
lbs/hr	Pounds Per Hour
psig	Pounds Per Square Inch Gauge
RPM	Revolutions Per Minute
sq. in.	Square Inch
ΔP	Differential Pressure

LIST OF CHEMICAL SYMBOLS AND FORMULAS

Al	Aluminum
Ag	Silver
As	Arsenic
B	Boron
Ba	Barium
BFB	4-Bromofluorobenzene
Be	Beryllium
Cl^-	Chloride
Ca	Calcium
CO_2	Carbon Dioxide
CO	Carbon Monoxide
Co	Cobalt
Cr	Chromium
Cu	Copper
DFTPP	Decafluorotriphenylphosphine
DNFB	2,4-Dinitrofluorobenzene
2,4-DNT	2,4-Dinitrotoluene
EDGN	Ethylene Glycol Dinitrate
HNO_3	Nitric Acid
Hg	Mercury
HCl	Hydrogen Chloride
HF	Hydrogen Fluoride
H_2O_2	Hydrogen Peroxide
$KMnO_4$	Potassium Permanganate
KOH	Potassium Hydroxide
Mn	Manganese
NaOH	Sodium Hydroxide
H_2SO_4	Sulfuric Acid
NG	Nitroglycerin
Ni	Nickel
NO_x	Oxides of Nitrogen
O_2	Oxygen
P	Phosphorus
Pb	Lead
PCB	Polychlorinated Biphenyls
PCDD	Polychlorinated Dibenzo-p-dioxin
PCDF	Polychlorinated Dibenzofuran
PFTBA	Perfluorotributylamine
PFK	Perfluorokerosene

LIST OF CHEMICAL SYMBOLS AND FORMULAS (Continued)

PM	Particulate Matter
Sb	Antimony
Se	Selenium
Tl	Thallium
TNT	2,4,6-trinitrotoluene
RDX	Cyclotrimethylenetrinitramine
Sn	Tin
V	Vanadium
Zn	Zinc

LIST OF IDENTIFICATION CODES FOR PDARS INSTRUMENTS

16-TIT-182	Pre-Quench Retort Exhaust Gas Temperature
16-TIC-008	Post-Quench Retort Exhaust Gas Temperature
16-TIT-042	Heated Discharge Conveyor Temperature (Bottom)
16-TIT-184	Heated Discharge Conveyor Temperature (Top)
16-PIC-018	Retort Pressure
16-SIC-098	Retort Rotational Speed
16-TIC-092	Afterburner Exhaust Gas Temperature
16-PDIT-813	Afterburner Exhaust Gas Velocity Head
24-PIT-011	Quench Brine Delivery Pressure
24-TIT-374	Quench Tower Exhaust Gas Temperature
24-PDIC-008	Venturi Scrubber Pressure Drop
24-FIC-006	Venturi Scrubber Brine Feed
24-FIC-030	Scrubber Tower Clean Liquor Feed
24-PIT-036	Scrubber Clean Liquor Delivery Pressure
24-AIC-007	Quench Brine pH
24-DIC-033	Quench Brine Density
16-AIT-059H	Exhaust Gas Carbon Monoxide Concentration (60-minute rolling average)
24-AIT-207H	Exhaust Gas Carbon Monoxide Concentration (60-minute rolling average)
16-AIT-175	Exhaust Gas Oxygen Concentration
24-AIT-206	Exhaust Gas Oxygen Concentration
16-AIT-059M	Exhaust Gas Carbon Monoxide Concentration (1-minute rolling average)
24-AIT-207M	Exhaust Gas Carbon Monoxide Concentration (1-minute rolling average)

1.0 INTRODUCTION

1.1 BACKGROUND

Under Congressional mandate, the Department of the Army must dispose of existing stocks of obsolete chemical warfare agent munitions. The Army is conducting a series of Agent Trial Burns (ATBs) at the Tooele Chemical Agent Disposal Facility (TOCDF) site using the five incineration systems to safely destroy the existing stockpile.

EG&G Defense Materials Inc. (EG&G) is responsible for operating the TOCDF and conducting the ATB on each of the furnace systems. An ATB was conducted with the Deactivation Furnace System (DFS) in January 1997 to demonstrate a destruction and removal efficiency (DRE) for Agent GB while processing M55 rockets containing residual Agent GB in accordance with the State of Utah permit and Title 40 Code of Federal Regulations Part 264 (40 CFR 264) Resource Conservation and Recovery Act (RCRA) regulations. An DRE for polychlorinated biphenyls (PCBs) was also determined in accordance with the Toxic Substances Control Act (TSCA) requirements. The DFS ATB was also used to demonstrate the performance of the DFS and ancillary pollution abatement system (PAS) with respect to compliance parameters and the ability to control emissions. During this DFS ATB, four performance runs were conducted, but only 3 are reported due to sampling problems during one performance run.

EG&G contracted TRC Environmental Corporation (TRC) to provide sampling and analysis support for the DFS ATB. Quanterra Laboratories and Air Toxics, Ltd. conducted the sample analyses. EG&G was responsible for the collection of certain monitoring information, collection and analysis of agent feed samples, and the collection of system operating data.

This document is a summary of the testing conducted in accordance with the *GB Agent Trial Burn Plan for the Deactivation Furnace System (DFS)*, dated June 6, 1996 and revised December 12, 1996 and the TSCA Final Demonstration Test Plan, dated April 8, 1996. Information specific to the TSCA Demonstration Plan will be presented in a TSCA Report submitted to EPA.

1.2 OBJECTIVES OF THE TEST PROGRAM AND SCOPE OF WORK

This report presents the results of the ATB conducted on January 7, 10, and 11, 1997. During these performance runs, M55 rockets were processed at an average of 35 rockets per hour. The rockets were punched and drained of Agent GB prior to entering the DFS kiln. However, a residual quantity of agent remains with the rocket parts, requiring a DRE for Agent GB to be determined in accordance with the State of Utah permit and Title 40 Code of Federal Regulations Part 264 (40 CFR 264) Resource Conservation and Recovery Act (RCRA)

regulations. Other performance standards were also required to be demonstrated in accordance with the facility's permit. Because of the presence of PCBs in the M55 shipping/firing tubes, it was necessary to determine system performance with regard to the TSCA, under 40 CFR 761. The general objectives of the DFS agent trial burn program were:

- To demonstrate that the DFS can meet the emissions and performance standard criteria established in the permit issued by the State of Utah covering the unit and summarized in Table 1-1;

- To demonstrate the conformance of the DFS to TSCA performance standards;

- To monitor certain other parameters which indicate the performance of the unit while burning chemical agents; and

- To determine the chemical and physical nature of liquid effluent from the unit's PAS.

- To determine the chemical and physical nature of solid residues generated from the system.

Specific parameters which were characterized for the DFS and PAS were:

- DREs for the DFS using Agent GB as the Principal Organic Hazardous Constituent (POHC) for fulfillment of RCRA requirements, and PCBs as the POHC for fulfillment of TSCA requirements;

- Particulate emissions to show compliance with the particulate matter (PM) emission rate limits set in the RCRA permit and the Air Approval Order;

- Hydrogen chloride (HCl) emissions to show compliance with the HCl emission rate limits set forth in the RCRA permit (Hydrogen fluoride (HF) was also monitored.);

- Emissions of phosphorus and metals (including hexavalent chromium) used in the Health Risk Assessment (HRA). These metals include aluminum (Al), antimony (Sb), arsenic (As), barium (Ba), beryllium (Be), boron (B), cadmium (Cd), chromium (Cr), cobalt (Co), copper (Cu), lead (Pb), manganese (Mn), mercury (Hg), nickel (Ni), selenium (Se), silver (Ag), thallium (Tl), tin (Sn), vanadium (V), and zinc (Zn). The objective of these measurements was to show compliance with the metal emission rate limits set forth in the RCRA permit;

Table 1-1 PROGRAM EMISSIONS COMPLIANCE SUMMARY

Emissions Parameter	State of Utah Permit Limit	DFS Program Results (Three-run Average) (1)
Agent GB Concentrations (2)	0.0003 mg/m^3	< 0.00006 mg/m^3 (2)
Agent GB Destruction and Removal Efficiency (DRE)	99.99%	> 99.999992% (2)
Particulate Matter	48.3 mg/dscm @ 7% O_2 (3) 180 mg/dscm @ 7% O_2 (4)	8.5 mg/dscm @ 7% O_2
Hydrogen Chloride(HCl)	4 lbs/hr or, 1% of total HCl prior to PAS	< 0.04 lbs/hr
	HRA Rate (5)	Actual Emissions
Trace Metals	grams/sec	grams/sec / lbs/hr
Aluminum (Al)	4.00E-03	1.9E-04 / 1.5E-03
Antimony (Sb)	8.23E-05	1.2E-05 / 9.9E-05
Arsenic (As)	4.12E-05	2.3E-06 / 1.8E-05
Barium (Ba)	8.23E-05	6.2E-06 / 4.9E-05
Beryllium (Be)	6.07E-06	< 7.8E-07 / < 6.2E-06
Boron (B)	1.74E-03	2.2E-05 / 1.8E-04
Cadmium (Cd)	1.83E-05	1.3E-04 / 1.0E-03
Chromium (Cr) (6)	3.94E-05	1.8E-05 / 1.9E-05
Cobalt Co)	1.65E-05	2.2E-06 / 1.7E-05
Copper (Cu)	5.27E-05	< 1.3E-05 / < 1.0E-04
Lead (Pb)	4.32E-04	4.3E-03 / 3.4E-02
Manganese (Mn)	4.12E-03	1.3E-05 / 1.0E-04
Mercury (Hg)	5.15E-06	< 9.7E-06 / < 7.7E-05
Nickel (Ni)	2.99E-05	1.0E-05 / 1.0E-05
Phosphorus (P)	9.14E-04	1.4E-03 / 1.1E-02
Selenium (Se)	4.12E-05	< 1.5E-06 / < 1.2E-05
Silver (Ag)	8.23E-05	< 3.9E-07 / < 3.1E-06
Thallium (Tl)	8.23E-06	< 7.8E-07 / < 6.2E-06
Tin (Sn)	1.61E-04	3.7E-06 / 2.9E-05
Vanadium (V)	4.12E-05	< 3.9E-06 / < 3.1E-05
Zinc (Zn)	8.23E-04	7.0E-04 / 5.6E-03
Carbon Monoxide (CO)	100 ppm @ 7% O_2 (stack)	8.4 ppm @ 7% O_2 (stack)

(1) Three runs reported are Test Runs 1, 3, and 4.

(2) Determined from analysis of Depot Area Air Monitoring System (DAAMS) sorbent tubes (Station PAS 702).

(3) Limit Set by Air Approval Order

(4) Limit Set by RCRA Permit

(5) DSHW Screening Health Risk Assessment, Feb. 1996, Appendix R

(6) Total chromium was measured and was found to be less than the hexavalent chromium permit limit.

- Emissions of polychlorinated dibenzo-p-dioxins and dibenzofurans (PCDD/PCDFs);

- Emissions of polychlorinated biphenyls (PCBs);

- Emissions of semi-volatile organic compounds (SVOCs) and semi-volatile total organic compounds (SVTOCs);

- Emissions of energetic materials, cyclotrimethylene trinitramine (RDX), nitroglycerin (NG), and trinitrotoluene (TNT).

- Emissions of volatile organic compounds (VOCs) and volatile total organic compounds (VTOC);

- Characterization of the scrubber liquid effluent, process water, stack condensate, sodium hydroxide (NaOH) makeup solution, heated discharge conveyor ash (HDC), and cyclone residue from the DFS.

- Exhaust gas characteristics: volumetric flow rates, mass flow rates, temperatures, pressures, and moisture;

- Operating parameters necessary for the incinerator to meet the required performance standards as set forth by RCRA, TSCA, U.S. Environmental Protection Agency (EPA), and Department of Environmental Quality (State of Utah) Division of Solid and Hazardous Waste (DSHW); and

- Oxygen (O_2) and carbon monoxide (CO) emissions using the TOCDF Continuous Emission Monitoring Systems (CEMS) to document the combustion conditions in the system and to show compliance with the CO concentration limits set forth in the RCRA permit.

1.3 SAMPLING AND ANALYTICAL METHODS

In order to accomplish the program scope of work, numerous test methodologies were required. Standard sampling methods were used to quantify the following stack gas parameters. Sampling methods for exhaust gas were taken from SW-846, 40 CFR 266, Appendix IX, Agent Detection Methods, and 40 CFR 60, Appendix A. The specific sampling methods used were:

- EPA Method 0050 (40 CFR 266, Appendix IX, Section 3.3.1) train to collect acid gases (HCl/HF) and particulate matter;

- Multiple Metals Train (40 CFR 266, Appendix IX, Section 3.1) to collect HRA metals and phosphorus;
- EPA Method Cr^{+6} (40 CFR 266, Appendix IX, Section 3.2) train to collect hexavalent chromium;
- SW-846 Method 0010 train to collect semi-volatile organic species;
- SW-846 Method 0010 train to collect SVTOCs;
- EPA Method 23 (40 CFR 266, Appendix IX, Section 3.4) train to collect PCBs;
- SW-846 Method 0023A train to collect PCDD/PCDF;
- SW-846 Method 0030 volatile organic sampling train (VOST) to collect volatile organic species;
- EPA Method 0040 train to collect volatile TOCs;
- United States Army Center for Health Promotion and Preventative Medicine (USACHPPM) formerly Army Environmental Hygiene Agency (AEHA) sampling train for energetic materials (STEM) train to collect energetic materials;
- EPA Method 7E (40 CFR 60, Appendix A) continuous monitoring to determine NO_x concentrations;
- EPA Method 3 (40 CFR 60, Appendix A) determination of O_2 and carbon dioxide (CO_2) by Orsat;
- ASTM Method S004 (tap sampling) for the collection of liquid process stream samples; and
- SW-846 Method S007 (trowel or scoop sampling) for the collection of solid process stream samples.

Analytical methods used for the analysis of the exhaust gas samples and process stream samples are as follows:

Exhaust Gas Parameters

- Particulate matter - gravimetric analysis in accordance with EPA Method 5;
- HCl and HF - ion chromatography in accordance with Method 9057 (40 CFR 266, Appendix IX, Section 3.3.3);
- VOCs - gas chromatography/mass spectroscopy (GC/MS) analysis in accordance with SW-846 Methods 5041;
- SVOCs - GC/MS analysis in accordance with SW-846 Method 8270B;
- PCDD/PCDF - high resolution gas chromatography/high resolution mass spectrometry (HRGC/HRMS) analysis in accordance with SW-846 Methods 0023A/8290;
- PCBs - GC/MS analysis in accordance with an EPA Modified Method 1668;
- VTOCs - gas chromatography/flame ionization detector (GC/FID) analysis in accordance with "Guidance for Total Organics";
- SVTOCs - GC/FID analysis in accordance with "Guidance for Total Organics";
- HRA Metals and phosphorous - inductively coupled plasma/mass spectrometry and cold vapor atomic absorption spectroscopy (ICP/MS and CVAAS) analysis in accordance with SW-846 Methods 6020 and 7470A; and
- Hexavalent Chromium - ion chromatography/post column reactor (IC/PCR) analysis in accordance with 40 CFR 266, Appendix IX, Section 3.2.

Process Stream Parameters

- VOCs - GC/MS analysis by Method SW-846 8260A;
- SVOCs - GC/MS analysis by SW-846 Method 8270B;
- PCDD/PCDF - HRGC/HRMS analysis by SW-846 Methods 8280 and 8290;
- PCBs - GC/MS analysis by an EPA Modified Method 1668;
- Toxicity characteristic leaching procedure (TCLP) Metals - ICP/CVAAS analysis by SW-846 Methods 1311/6010A/7470A;
- HRA Metals - ICP/CVAAS analysis by SW-846 Methods 3050/6010A/7470A.

1.4 DESCRIPTION OF PERFORMANCE RUNS

This report presents the test procedures and results of the agent trial burn conducted for the DFS on January 7, 10, and 11, 1997. The sampling team from TRC consisted of a sixteen-man crew. All sample analyses were conducted by Quanterra of West Sacramento, California, with the exception of exhaust gas volatiles analyses which were conducted by Air Toxics, Ltd. of Folsom, California, and the solid process stream TCLP analysis which were conducted by Quanterra of Santa Ana, California.

TRC conducted trial burn sampling and analysis for the above parameters to determine performance of the DFS while processing M55 rockets. All exhaust gas sampling was conducted in the horizontal duct located between the induced draft (ID) fan and the common stack. A total of four performance runs were conducted. The results of three of these performance runs (Runs 1, 3, and 4) are reported in this document for the purpose of demonstrating the performance of the system. Raw data for Performance Run 2 is presented in the appropriate appendices.

1.5 REPORT ORGANIZATION

This report presents the results of the DFS ATB test program completed at the TOCDF facility. This report follows the general outline presented in the DFS ATB Plan. Slight changes in the subsections have been made to aid in presentation of the data. A discussion of results from the test program is presented in Section 2.0. Section 3.0 contains descriptions of the process operating conditions, Process Data Acquisition and Recording System (PDARS), and feed rates. Sections 4.0 and 5.0 contain descriptions of the sampling and analytical methodologies, respectively, utilized in the campaign. Section 6.0 presents a summary of Quality Assurance/Quality Control (QA/QC) results for the program. Section 7.0 presents the conclusions of the report.

Additionally, appendices are included which contain all relevant field sampling data sheets, field recovery data sheets, reduced field data, exhaust gas and process stream analytical data reports, facility process data, a QA/QC report, and sampling equipment calibration sheets. Appendix H contains the emissions and process sample concentrations associated with the Fuel Only Baseline Run that was conducted on December 15, 1996.

2.0 SUMMARY AND DISCUSSION OF RESULTS

2.1 EQUIPMENT CALIBRATION

TRC follows an orderly program of positive actions to prevent the failure of equipment or instruments during use. This preventative maintenance and careful calibration helps to ensure accurate measurements from field and laboratory instruments.

Once the equipment had gone through the cleaning and repair process, it was calibrated. All equipment that is scheduled for field use is cleaned and checked prior to calibration. Once the equipment had been calibrated, it was packed and stored to ensure the integrity of the equipment.

All equipment was inspected for proper operation and durability prior to calibration. Calibration of the equipment was conducted in accordance with the procedures outlined in EPA documents entitled "*Quality Assurance Handbook for Air Pollution Measurement Systems; Volume III - Stationary Source Specific Methods*" (EPA-600/4-77-027b) and 40 CFR 60 Appendix A. All calibrations were performed prior to test program. The calibration status of the DFS process control instruments at the time of the ATB is summarized in Table 2-1. Exhaust gas sampling equipment calibration data are provided in Appendix B, Annex C.

Calibration of the sampling equipment was verified after the sampling was completed. The flow calibrations of the dry gas meters were checked and verified that they met the criteria for post-test calibration. The pitot tubes were inspected for damage and corrosion. The post-test calibration sheets are included in Appendix B, Annex C.

2.2 PERFORMANCE RUN CHRONOLOGY

The following are daily accounts of the on-site test activities as recorded by TRC personnel. Table 2-2 presents a summary of the sampling times for each performance run.

Monday, January 6, 1997 - Mobilization

The test crew arrived on-site January 6, 1997 to set up equipment for exhaust gas sampling of the DFS. Since the DFS shares a common stack with three other furnaces, sampling took place in the horizontal duct between the DFS ID fan and the common stack. To complete all the required exhaust gas sampling, three sets of isokinetic sampling ports were used along with three single ports for non-isokinetic sampling.

TABLE 2-1. CALIBRATION STATUS OF RCRA INSTRUMENTS

Item	Instrument Tag ID	Instrument Description	Calibration Frequency (days)	Date of Last Test	Calibration Valid during DFS ATB
1	16-TIT-182	Pre-Quench Retort Exhaust Gas Temperature	180	10/03/96	Yes
	16-TIC-008	Post Quench Retort Exhaust Gas Temperature	180	12/19/96	Yes
2	16-TIT-042	Heated Discharge Conveyor Temperature (Bottom)	180	12/19/96	Yes
	16-TIT-184	Heated Discharge Conveyor Temperature (Top)	180	8/28/96	Yes
3	16-PIC-018	Retort Pressure	360	9/24/96	Yes
4	16-TIC-092	Afterburner Exhaust Gas Temperature	180	8/11/96	Yes
5	16-PDIT-813	Afterburner Exhaust Gas Velocity Head	360	10/13/96	Yes
6	24-PIT-011	Quench Brine Delivery Pressure	180	1/02/97	Yes
7	24-TIT-374	Quench Tower Exhaust Gas Temperature	180	9/02/96	Yes
8	24-PDIC-008	Venturi Scrubber Pressure Drop	360	1/02/97	Yes
9	24-FIC-006	Venturi Scrubber Brine Feed	180	(1)	Yes
10	24-FIC-030	Scrubber Tower Clean Liquor Feed	180	(1)	Yes
11	24-PIT-036	Scrubber Clean Liquor Delivery Pressure	180	9/25/96	Yes
12	24-AIC-007	Quench Brine pH	7	01/04/97 01/10/97	Yes
13	24-DIC-033	Quench Brine Density	180	(1)	Yes
14	16-AIT-059H	Exhaust Gas CO Concentration	Daily	Daily	Yes
	24-AIT-207H	Exhaust Gas CO Concentration	Daily	Daily	Yes
15	16-AIT-175	Exhaust Gas Oxygen Concentration	Daily	Daily	Yes
	24-AIT-206	Exhaust Gas Oxygen Concentration	Daily	Daily	Yes
16	16-AIT-059M	Exhaust Gas CO Concentration	Daily	Daily	Yes
	24-AIT-207M	Exhaust Gas CO Concentration	Daily	Daily	Yes
17	PAS 702	PAS Blower Exhaust Agent Detected	Every 4 Hours	Every 4 Hours	Yes
18	PAS 701	PAS Blower Exhaust Agent Detected	Every 4 Hours	Every 4 Hours	Yes

(1) Factory calibrated, setup on Preventative Maintenance Schedule.

TABLE 2-2. SAMPLING TIME SUMMARY

	Run 1 07 January		Run 3 10 January		Run 4 11 January	
	Start	End	Start	End	Start	End
Method 0023A (PCDD/PCDF)	08:37	16:00	08:55	17:02	08:33	16:02
Method 23 (PCB)	08:38	16:00	08:40	16:51	08:30	16:06
Method 0010 (SVTOC)	08:33	15:57	08:50	16:51	08:32	16:23
Method 0010 (Semi-volatile)	08:31	16:13	08:40	16:56	08:49	16:19
Method 0040 (VTOC)	08:50	16:15	08:51	09:51	08:43	09:43
Method 0030 (VOST)	08:50	15:45	08:45	16:35	08:40	15:45
STEM (Energetics)	08:50	13:03	08:40	12:01	08:30	11:51
Method 0050 (PM/HCl/HF)	08:32	13:03	08:40	11:25	08:30	11:15
Multiple Metals	14:40	16:57	13:01	17:32	12:50	16:02
Method Cr^{+6}	14:40	16:57	13:01	17:32	12:50	16:02
Total Sampling Window	**08:31**	**16:57**	**08:40**	**17:32**	**08:30**	**16:23**

To gain access to all the sampling ports it was necessary to stage the sampling equipment at two different levels. The first level (upper section) was situated at the same elevation as the duct. Sampling conducted at this location included the M0023A, M23, M0010, M0030, and SVTOC trains. The second level (lower section) was situated one level below the duct. Sampling conducted at this location included the STEM, M0050, Cr^{+6}, Multiple Metals, and M0040 trains and NOx probe for Method 7E.

Equipment set-up was completed successfully at both locations. Sampling trains were prepared and retained in their respective preparation laboratories to maintain chain-of-custody (COC) and cleanliness. Preliminary measurements deemed necessary were taken to verify exhaust gas moisture and flow rate. These data were then used to calculate the appropriate nozzle size and sample flow rate to be used to accomplish isokinetic sampling.

An end-of-day meeting was held with all members of the sample team. This meeting was held to review all designated responsibilities of each team member. Sampling was scheduled to begin at 0800 hours on January 7, 1997, once the DFS had reached steady-state operations and upon authorization from the Test Director. Emission testing was conducted on January 7 through January 11, 1997.

Tuesday, January 7, 1997 - Run 1

The sampling crew arrived on-site at 0600 hours. All sample trains were set-up, leak checked and declared ready for sampling at 0820 hours. Sampling began at 0831 hours and was completed for all sampling trains by 1657 hours. In general, the sampling progressed smoothly with only a few minor difficulties. Two incidents associated with DFS operations caused all sampling to be interrupted between 0957 hours and 1001 hours, and from 1339 hours to 1349 hours. In addition, interruption of electrical power to the M0010 semi-volatile train from 0936 hours to 0938 hours and again from 0944 hours to 0949 hours were experienced. At 1025 hours this sampling train was shut off due to high sample vacuum. Investigation of the situation indicated that an ice blockage had formed in the small opening of the Greenburg-Smith impinger (Impinger # 2) insert. This blockage was most likely caused by the frequent sampling interruptions and the sub-freezing ambient temperature. The blockage was cleared and sampling restarted at 1035 hours.

In addition to the DFS operational issues documented earlier, there was a plant interruption which stopped testing from 1156 hours until 1245 hours.

At 1328 hours, an interruption in electrical power occurred on the Method 0023A sampling train. The electrical power was quickly reestablished and sampling was restarted at 1331 hours. No further interruptions were experienced on this sampling train.

The Method 23 PCB and the Method 0010 TOC sampling trains did not experience any electrical power interruptions, and sampling was only interrupted by the DFS operational issues.

During the operation of the STEM sampling train, the operator experienced a problem in pulling the desired sampling rate. This was caused by a steady increase in the Δp (differential pressure reading used in determining the velocity of the exhaust gas through the duct) reading. This steady increase resulted in the operator's increasing the sampling flow. The Δp readings increased to the point where the operator could not maintain isokinetic sampling. The train was shut down at 1006 hours to allow the operator to change the sampling nozzle to one with a smaller diameter. A smaller diameter nozzle resulted in a lower sampling rate so that isokinetic sampling could be maintained.

Methods 0050, Multiple Metals, and Cr^{+6} were conducted without sampling incidents causing interruptions. The only interruptions experienced during sampling of these trains were those attributed to DFS operational issues presented above.

At the end of the day, a post-test meeting was held immediately after testing to address issues pertaining to minor changes to be made in the program for the remaining sampling runs.

These issues included:

1. Ensure alignment of the pitot tubes parallel to the gas flow.

2. Make adjustment to Cr^{+6} sampling train to increase the flow of reagent in the recirculation line.

3. Reduce the number of TOC sample bags on the Method 0040 sampling train to two (2) bags per run. One bag to be collected during the first three hours of the day's sampling activities, and the second collected during the second three-hour period. The daily field blank will be run between the two samples.

4. Reposition Orsat sampling system to one of the six-hour sampling trains.

All these issues were addressed and incorporated into the remaining days' test schedule. In addition to the above issues, it was determined during this day's sampling that all sampling trains experienced a gradual increase in the Δp measurements. It was decided that prior to the next day's testing, an additional pitot traverse of the duct would be performed to determine if the exhaust gas flow would allow sampling with the present nozzles, or if resizing of the nozzle would be required.

All sample trains passed all QA/QC leak checks and sample collection rates were within the isokinetic limits.

Wednesday, January 8, 1997 - Field Blanks

The sampling crew arrived on-site at 0600 hours. All sample trains were set-up, leak checked and declared ready for sampling prior to the scheduled 0800 hours start time. DFS operational issues caused the postponement of Run 2 scheduled for this day. It was determined that the DFS would be able to maintain a reduced feed rate capacity during this day. This reduced feed rate allowed for the collection of field blanks for all the sampling trains. Thus, all field blanks were collected during this day. All sampling trains were prepared and transported to the testing location. The sampling trains were assembled, leak checked, and maintained at the testing locations for the duration of time allocated to each sample train during a normal test day. All required leak checks were performed, and the recovery of each sample train followed the same procedures as conducted following an exhaust gas sampling run. All field blanks were recovered by the field chemists in the same manner as an exhaust gas sampling run and were stored under custody in the sample refrigerator at $< 4°C$.

Thursday, January 9, 1997 - Run 2

The sampling crew arrived on-site at 0600 hours. All sample trains were set-up, leak checked, and declared ready for sampling prior to the scheduled 0800 start time. Prior to sampling, a pitot traverse was conducted to determine if the exhaust gas flow had remained high, and resultant Δp measurements would allow the use of the nozzles used during Run 1. This preliminary measurement indicated that the exhaust gas flow rate was below the higher flow rate experienced during Run 1. It was decided not to replace the nozzles with smaller ones.

Sampling began at 0802 hours and was completed on all sample trains at 1556 hours. As was experienced during Run 1, the exhaust gas flow did increase through the run, resulting in the same increased sample flow rate through the sample trains. As also was experienced during Run 1, cooling of the sample gas prior to entering the XAD resin trap became a significant concern to the operators. XAD inlet temperatures in the M0023A and M0010 trains could not be maintained below 20° C. As a result, these two sampling trains were voided for failing QA/QC requirements.

All sample trains passed all leak checks and isokinetics for this day's sampling. Following the completion of sampling, a post-test meeting was held to discuss the integrity of the two sample trains which had been voided and also the other samples collected for Run 2. It was concluded that all samples collected for Run 2 would not be considered representative. A fourth run was scheduled to be conducted on the day following the successful completion of Run 3.

Friday, January 10, 1997 - Run 3

The sampling crew arrived on-site at 0600 hours. All sample trains were set-up, leak checked and declared ready for sampling prior to the scheduled 0800 hours start time. In preparation for this day's testing, all sampling trains were equipped with smaller diameter nozzles in anticipation of the exhaust gas flows experienced previously during Runs 1 and 2. In addition, a preliminary traverse was conducted to estimate the exhaust gas flow rate.

Sampling began at 0840 hours and was completed at 1732 hours. The smaller nozzle diameters allowed for a lower flow of the sampled gas in the coil condenser, resulting in the temperature of the gas entering the XAD resin trap being well below the upper limit of 20°C. Minor interruptions to the Method 23, Method 0023A, Method 0010, and Method 0010 TOC sampling trains were caused by adjustments to the XAD resin trap cooling system. In addition, an interruption of electrical power at 1605 hours to the Method 0023A sampling train caused sampling with this train to be interrupted for two minutes.

At 1420 hours, sampling was interrupted by a DFS operational issue. At approximately 1435 hours, all sampling probes were removed from the duct and secured. Sampling was restarted on all sampling trains by 1554 hours.

At 1311 hours, sampling was interrupted on the Cr^{+6} sampling train due to failure of the recirculation pump. Adjustments were made to the recirculation system and sampling was reinitiated at 1350 hours. At 1415 hours the recirculation system failed for a second time. The operator determined that the recirculation line needed to be replaced with one of a larger diameter. The operator leak checked the sample train (passed) and replaced the recirculation line with a larger diameter line. The operator leak checked the sample train (passed) and restarted sampling at 1430 hours. During the leak check of this train at the port change, the nozzle was chipped. The operator removed and replaced the nozzle and again leak checked the train prior to resuming sampling in the next port.

Sample 3A of the Method 0030 VOST was deemed an invalid sample due to failing the post sampling leak check. For this reason, a seventh sample was collected for Run 3 and is designated 3G.

All sampling train leak checks and isokinetics were completed successfully, meeting all necessary QA/QC requirements.

Saturday, January 11, 1997 - Run 4

The sampling crew arrived on-site at 0600 hours. All sample trains were set-up, leak-checked and declared ready for sampling prior to the scheduled 0800 start time. Sampling started at 0830 hours and was completed at 1623 hours. No major problems were encountered during the sampling. Sampling was interrupted at 1343 hours due to DFS operational issues. Sampling was restarted at 1448 hours with no further interruptions.

A modification to the Orsat sampling technique was made. This modification required that two (2) sample bags would be collected during the six-hour sampling period. One bag was filled during the first three-hour sampling period; a second bag was filled during the second three-hour sampling period.

All sampling train leak checks and isokinetics were completed successfully, meeting all necessary QA/QC requirements.

Monday, January 13, 1997 - Demobilization

The sampling crew arrived on-site at 0600 hours. All samples were prepared for transportation to the analytical laboratory. All COC forms were filled out in triplicate and were secured on the outside of the shipping containers. All sample labels were checked to ensure that all the correct information was included to prevent misidentification of samples. Sample seals were affixed to all sample containers prior to placing the samples into the sample shipping containers. All samples were placed into insulated containers and packed with either "blue ice" or ice cubes to ensure refrigerated temperatures would be maintained at or below

4°C. A liquid temperature control sample was placed in each insulated container to be checked at the laboratory upon opening to ensure that proper temperature was maintained.

Once all the samples were prepared for transportation, the insulated containers were sealed with tape and a sample seal was used to maintain the integrity of the sample containers. The samples were then transported to the Salt Lake City International Airport where they were stowed securely on a private jet for transportation to the analytical laboratory in Sacramento, California. A representative of TRC accompanied the samples during their transport to the laboratory and successfully signed off all samples to the laboratory.

2.3 DEVIATIONS FROM THE PLAN

The following are descriptions of changes made to on-site methodologies that differ from those presented in the Trial Burn Plan.

1) The number of TOC sample bags on the Method 0040 sampling train was reduced to two (2) bags per run. One bag was collected during the first three hours of the day's sampling activities; the second bag was collected during the second three-hour period. The daily field blank was run between the two samples. This change was made for Runs 3 and 4 with the approval of DSHW and EPA representatives.

2) A modification to the Orsat sampling technique was made. A single bag was collected over the entire six-hour duration during Run 1. After Run 1, this was corrected. During Runs 3 and 4, two (2) sample bags were collected during the six-hour sampling period. One bag was filled during the first three-hour sampling period; a second bag was filled during the second three-hour sampling period.

3) A modification was made to the M23 procedures for PCB recovery. The toluene QC rinse was omitted from the recovery procedure. This toluene rinse is used as a final QC rinse of the PCDD/PCDF train and is analyzed only for PCDD/PCDF. Because the M23 train was used only for PCB collection, it was not appropriate to collect or analyze a toluene rinse for QC purposes. This deviation was approved by EPA and DSHW.

2.4 AGENT GB FEED RATES AND EMISSION RATES

Agent GB was the POHC for the DFS ATB. DREs were calculated for Agent GB for each performance run for the time period when the other exhaust gas samples were collected. The data used in the DRE calculation was obtained from the analysis of the Depot Area Air Monitoring System (DAAMS) tubes and the amount of Agent GB fed to the system as determined by the Agent Quantitation System (AQS).

2.4.1 Agent GB Characterization

Three samples of the Agent GB were collected during the ATB. Each agent sample was analyzed for agent purity, agent breakdown products, HRA metals, and an estimated density. Analysis of the Agent samples were conducted by the Chemical Assessment Laboratory (CAL) and Mountain States Laboratory.

The organic composition of the samples was determined by the CAL. Two aliquots of each agent sample were analyzed to determine the agent purity. The two aliquots were weighed into tubes to estimate the density from the weight of a known volume pipetted into the tubes. The aliquots were then diluted with isopropyl alcohol to a known volume. Portions of the diluted samples were injected three different times into a gas chromatograph equipped with a flame ionization detector (GC/FID). The concentration of the organic compounds were calculated by comparison to external standards. All of the injections were averaged for the concentrations reported in Table 2-3. The agent from the M55 rockets was consistent with the purity ranging from 81.4 to 83.9 weight percent. There was little variation in the concentration of the other organic compounds present in the agent.

Aliquots of the agent were also prepared for the analysis of metals by the CAL. Aliquots of the agent were digested in nitric acid to destroy the agent and solubilize the metals present. When the organic matrix was destroyed by the acid, the aqueous preparation was tested for agent. When the agent concentration was below 20 ppb, the samples were sent off site for the analysis of metals by Mountain States Laboratory. The mercury concentration was determined by Method 7470. The other HRA metals were determined by analysis by inductively coupled plasma emission spectroscopy (ICP). The results of the metals analysis is shown in Table 2-3. Only trace levels of metals were found in the agent samples.

2.4.2 DAAMS Tube Analysis

Each DAAMS tube collected an integrated sample of the exhaust gas for a one-hour period before being removed and analyzed by gas chromatography (GC) for agent mass. Three DAAMS tubes are collected each hour. The purpose of the three tubes is to allow the confirmation of the agent concentration by three different chromatographic conditions in three different GCs. All three tubes are then analyzed with the results of the A tube being analyzed with the quality control samples. On a given day, all of the A tubes will be analyzed on one GC, all of the B tubes will be analyzed on a different GC, and all of the C tubes will be analyzed on a third GC. The next day the A tubes will be analyzed on a different GC and the other tubes will be rotated to different GCs. Similar concentrations of agent from each of the three tube analyses would be required to confirm the presence of Agent GB.

TABLE 2-3. AGENT GB CHARACTERIZATION

	Run #1	Run #3	Run #4	Average
Compound, Wt. %				
Agent GB	82.1	83.9	81.4	82.5
DIMP	6.0	6.2	6.1	6.1
TBA	5.2	5.5	5.2	5.3
DIU	0.6	0.5	0.5	0.5
DICDI	< 0.1	< 0.1	< 0.1	< 0.1
Density, g/cc	1.08	1.10	1.10	1.1
Metals, mg/L				
Aluminum	279	1135	968	794
Antimony	< 27	< 17	< 17	< 20
Arsenic	< 8.0	< 5.1	< 5.2	< 6.1
Barium	< 1.0	2.4	3.1	2.2
Beryllium	< 0.06	< 0.03	< 0.03	< 0.04
Boron	11	2874	2350	1745
Cadmium	< 1.1	< 0.7	< 0.7	< 0.8
Chromium	5.5	2.5	2.4	3.5
Cobalt	< 1.1	7.7	7.5	5.4
Copper	< 2.7	< 1.7	< 1.7	< 2.0
Lead	< 11.0	< 6.9	< 6.9	<8.3
Manganese	1.4	0.65	0.76	0.9
Mercury	0.04	< 0.02	< 0.02	< 0.03
Nickel	< 8.2	< 5.1	< 5.2	< 6.2
Selenium	< 19	< 12	< 12	< 14
Silver	< 1.6	< 1.0	< 1.0	< 1.2
Thallium	< 27	< 17	< 17	< 20
Tin	< 55	< 34	< 34	< 41
Vanadium	< 1.1	< 0.7	< 0.7	< 0.8
Zinc	14	9.3	11	11.4

DIMP = Diisopropylmethylphosphonate (Decomposition Product)
TBA = Tributyl amine (Stabilizer)
DICDI = Diisopropylcarbodiimide (Stabilizer)
DIU = Diisopropyl urea (Decomposition Product of DICDI)

After the tubes are collected, they are taken to the CAL where they are analyzed by a GC equipped with a flame photometric detector. The tubes are thermally desorbed into the GC where any compounds present are separated from Agent GB. The compounds are detected by burning the compounds in a flame and measuring the light emitted from phosphorus in Agent GB. Concentrations are determined by comparison to external standards. The volume of gas sampled is recorded for each tube and is used in the calculation of exhaust gas concentrations. The DAAMS tube analyses for the DFS GB ATB are reported in Table 2-4. There was no confirmed agent detected in the exhaust stack during any of the performance runs.

2.4.3 Destruction and Removal Efficiencies (DREs)

Calculation of the DRE was accomplished using the following equation:

$$DRE = \frac{(W_{in} - W_{out})}{W_{in}} \times 100$$

where:

W_{in} = Mass feed rate of Agent GB in the M55 rockets feeding the incinerator.

W_{out} = Mass emission rate of Agent GB present prior to release to the atmosphere.

Feed rates of Agent GB to the DFS are determined by the AQS. Each rocket has three holes punched in the agent compartment allowing the agent to drain into the AQS. The amount of agent collected is determined and subtracted from the assumed weight of agent in the rocket. The difference is the weight of agent fed to the DFS with that rocket. The PDARS recorded the weight of agent from each rocket. The weights of agent fed each hour was summed to use in the DRE calculations shown in Table 2-4.

Emission rates of Agent GB are based on the analysis of the DAAMS tubes. For the purposes of the DRE calculation, the following guidelines were established to present a conservative estimate of the DRE of Agent GB:

> If the analysis of the A tube produces a result below the limit of Quantitation (LOQ), then the LOQ is used for the value of the Agent GB concentration. If the analysis of the A tube produces a result above the LOQ, then the results are compared to the analysis of the B tube. If the B tube results are below the LOQ, then the LOQ is used in the calculation of the DRE. If the A and B tube results are above the LOQ, then the A tube result is used in the DRE calculation. The C tube analysis is used to confirm the presence of Agent GB and is not used in the calculation of the DRE.

Table 2-4
DFS GB ATB Agent DRE
Run 1
January 7, 1997

Ending Sample Collection Time	Sample Collection Time (min)	Found Agent (ng)	Total Sample Volume (L)	% Stack Gas	Stack Sample Volume (L)	Agent Conc (mg/m^3)	Exhaust Gas Flow Rate (acfm)	Exhaust Gas Flow Rate (m^3/m)	Exhaust Gas Emission Rate (lb/hr)	Agent Feed Rate (lb/hr)	Agent Purity (%)	DRE (%)
8:31	Early Sample Train Start											
9:00	59	< 0.022	89.1	8.2%	7.31	< 3.01E-06	33,200	939.56	< 3.68E-07	8.6	82.1%	> 99.9999948%
10:00*	52	0.1691	73.8	8.2%	6.05	2.79E-05	33,200	939.56	3.01E-06	8.0	82.1%	99.999954%
11:00	53	< 0.022	77.4	8.2%	6.35	< 3.47E-06	33,200	939.56	< 3.81E-07	11.4	82.1%	> 99.9999959%
12:00	52	< 0.022	81.4	8.2%	6.67	< 3.30E-06	33,200	939.56	< 3.55E-07	11.3	82.1%	> 99.9999962%
13:00	51	< 0.022	75.2	8.2%	6.17	< 3.57E-06	33,200	939.56	< 3.77E-07	10.1	82.1%	> 99.9999955%
14:00	52	< 0.022	72.3	8.2%	5.93	< 3.71E-06	33,200	939.56	< 4.00E-07	14.7	82.1%	> 99.9999967%
15:00	52	< 0.022	71.5	8.2%	5.86	< 3.75E-06	33,200	939.56	< 4.04E-07	16.0	82.1%	> 99.9999969%
16:00	52	< 0.022	75.7	8.2%	6.20	< 3.55E-06	33,200	939.56	< 3.82E-07	17.1	82.1%	> 99.9999973%
17:00	51	< 0.022	75.5	8.2%	6.19	< 3.55E-06	33,200	939.56	< 3.75E-07	17.1	82.1%	> 99.9999973%
16:13	Late Sample Train Stop											
Totals	474	< 0.345	691.8	8.2%	56.73	< 6.08E-06	33,200	939.56	< 6.64E-07	13	82.1%	> 99.9999936%

*The presence of Agent GB was not confirmed in this sample. See Section 2.4.3 for explaination. The reported value is used to calculate a conservative DRE value.

Table 2-4 (Continued)
DFS GB ATB Agent DRE
Run 3
January 10, 1997

Ending Sample Collection Time	Sample Collection Time (min)	Found Agent (ng)	Total Sample Volume (L)	% Stack Gas	Stack Sample Volume (L)	Agent Conc (mg/m^3)	Exhaust Gas Flow Rate (acfm)	Exhaust Gas Flow Rate (m^3/m)	Exhaust Gas Emission Rate (lb/hr)	Agent Feed Rate (lb/hr)	Agent Purity	DRE
8:12	Early Sample Train Start											
9:00*	55	0.4948	83.9	7.65%	6.42	7.71E-05	32,300	914.09	8.55E-06	7.0	83.9%	99.99985%
10:00*	53	0.0503	77.9	7.65%	5.96	8.44E-06	32,300	914.09	9.01E-07	9.1	83.9%	99.999988%
11:00	53	< 0.022	84.8	7.65%	6.49	< 3.39E-06	32,300	914.09	< 3.62E-07	10.1	83.9%	> 99.9999957%
12:00	53	< 0.022	76.9	7.65%	5.88	< 3.74E-06	32,300	914.09	< 4.00E-07	10.2	83.9%	> 99.9999953%
13:00	53	< 0.022	82.9	7.65%	6.35	< 3.47E-06	32,300	914.09	< 3.70E-07	10.5	83.9%	> 99.9999958%
14:00	53	< 0.022	76.6	7.65%	5.86	< 3.76E-06	32,300	914.09	< 4.01E-07	5.1	83.9%	> 99.9999906%
15:00	53	< 0.022	78.4	7.65%	6.00	< 3.67E-06	32,300	914.09	< 3.92E-07	24.9	83.9%	> 99.9999981%
16:00	51	< 0.022	79.3	7.65%	6.07	< 3.63E-06	32,300	914.09	< 3.73E-07	19.6	83.9%	> 99.9999977%
17:00	54	< 0.022	86.4	7.65%	6.61	< 3.33E-06	32,300	914.09	< 3.62E-07	6.9	83.9%	> 99.9999937%
18:00	53	< 0.022	72.3	7.65%	5.53	< 3.98E-06	32,300	914.09	< 4.25E-07	6.9	83.9%	> 99.9999927%
17:02	Late Sample Train Stop											
Totals	531	< 0.721	799.5	7.65%	61.16	< 1.18E-05	32,300	914.09	< 1.26E-06	11	84%	> 99.999986%

*The presence of Agent GB was not confirmed in this sample. The reported value is used to calculate a conservative DRE value.

Table 2-4 (Continued)
DFS GB ATB Agent DRE
Run 4
January 11, 1997

Ending Sample Collection Time	Sample Collection Time (min)	Found Agent (ng)	Total Sample Volume (L)	% Stack Gas	Stack Sample Volume (L)	Agent Conc (mg/m^3)	Exhaust Gas Flow Rate (acfm)	Exhaust Gas Flow Rate (m^3/m)	Exhaust Gas Emission Rate (lb/hr)	Agent Feed Rate (lb/hr)	Agent Purity	DRE
8:30	Early Sample Train Start											
9:00	54	< 0.022	73.4	7.85%	5.77	< 3.82E-06	31,000	877.30	< 3.99E-07	8.3	81.4%	> 99.9999941%
10:00	52	< 0.022	73.6	7.85%	5.78	< 3.81E-06	31,000	877.30	< 3.83E-07	8.0	81.4%	> 99.9999941%
11:00	52	< 0.022	75.9	7.85%	5.96	< 3.69E-06	31,000	877.30	< 3.71E-07	2.2	81.4%	> 99.9999793%
12:00	53	< 0.022	72.9	7.85%	5.72	< 3.85E-06	31,000	877.30	< 3.94E-07	7.9	81.4%	> 99.9999939%
13:00	53	< 0.022	76.6	7.85%	6.01	< 3.66E-06	31,000	877.30	< 3.75E-07	11.2	81.4%	> 99.9999959%
14:00	53	< 0.022	80.3	7.85%	6.30	< 3.49E-06	31,000	877.30	< 3.58E-07	8.9	81.4%	> 99.9999951%
15:00	53	< 0.022	81.6	7.85%	6.41	< 3.43E-06	31,000	877.30	< 3.52E-07	11.6	81.4%	> 99.9999963%
16:00	51	< 0.022	75.7	7.85%	5.95	< 3.70E-06	31,000	877.30	< 3.65E-07	8.4	81.4%	> 99.9999947%
17:00	55	< 0.022	80.6	7.85%	6.33	< 3.48E-06	31,000	877.30	< 3.70E-07	20.7	81.4%	> 99.9999978%
16:23	Late Sample Train Stop											
Totals	476	< 0.198	690.6	7.85%	54.21	< 3.65E-06	31,000	877.30	< 3.74E-07	9.7	81%	> 99.9999953%

The DRE summaries in Table 2-4 show there were three cases where the Agent GB concentrations were above the LOQ in both the A and B tubes. Concentrations in the A tube were used for the DRE calculation in those three cases. In all three cases, the presence of Agent GB was not confirmed in the C tubes or by the ACAMS in the DFS duct which monitors agent concentrations in the exhaust gas on a continuous basis. In all three cases, the agent was not confirmed by the ACAMS monitoring the exhaust gas in the common stack. Therefore, there was no release of detectable Agent GB to the environment. This rate of false positives at an LOQ of 0.022 ng is consistent with the rate of false positives established in the plant before Agent GB was introduced into the plant.

Using the conservative numbers for the Agent GB concentrations in the calculation results in a DRE that is still greater than the required 99.99 %. The average DRE for Run 1 was greater than 99.9999936 %. The average for Run 3 was greater than 99.999986 %. The average for Run 4 was greater than 99.9999953 %.

2.5 EXHAUST GAS EMISSION RESULTS

This section presents a summary of the test results for performance Runs 1, 3, and 4 conducted during the DFS ATB. These runs were conducted on January 7th, 10th, and 11th, respectively. Ten sampling trains were utilized. Calculations used in reducing the data are presented in Appendix A. The field sampling data sheets and the reduced field data are presented in Appendix B. The analytical and operational reports supporting the data presented in this section can be found in Appendices F, G, I, and J.

As a general note, blank corrections have been applied where directed by the respective methods. This includes the metals, Cr^{+6}, and HCl data. While most of the field-biased blank results were insignificant, some yielded results almost as high as the samples themselves.

2.5.1 Particulate Matter Emissions

Three two-hour samples were collected at the DFS duct sampling location at Ports I and J as shown in Figure 2-1. The PM was collected using an EPA Method 0050 sampling train. Table 2-5 presents the results for each performance run, plus the three-run average. The particulate concentrations averaged 8.5 mg/dscm @ 7% O_2 at an emission rate of 0.28 lbs/hr. As shown in the table, Run 3 concentrations were roughly one-third the concentrations found during Runs 1 and 4. All three performance runs were well within permit limits.

Figure 2-1. DFS Horizontal Duct Ports ATB Sampling Locations

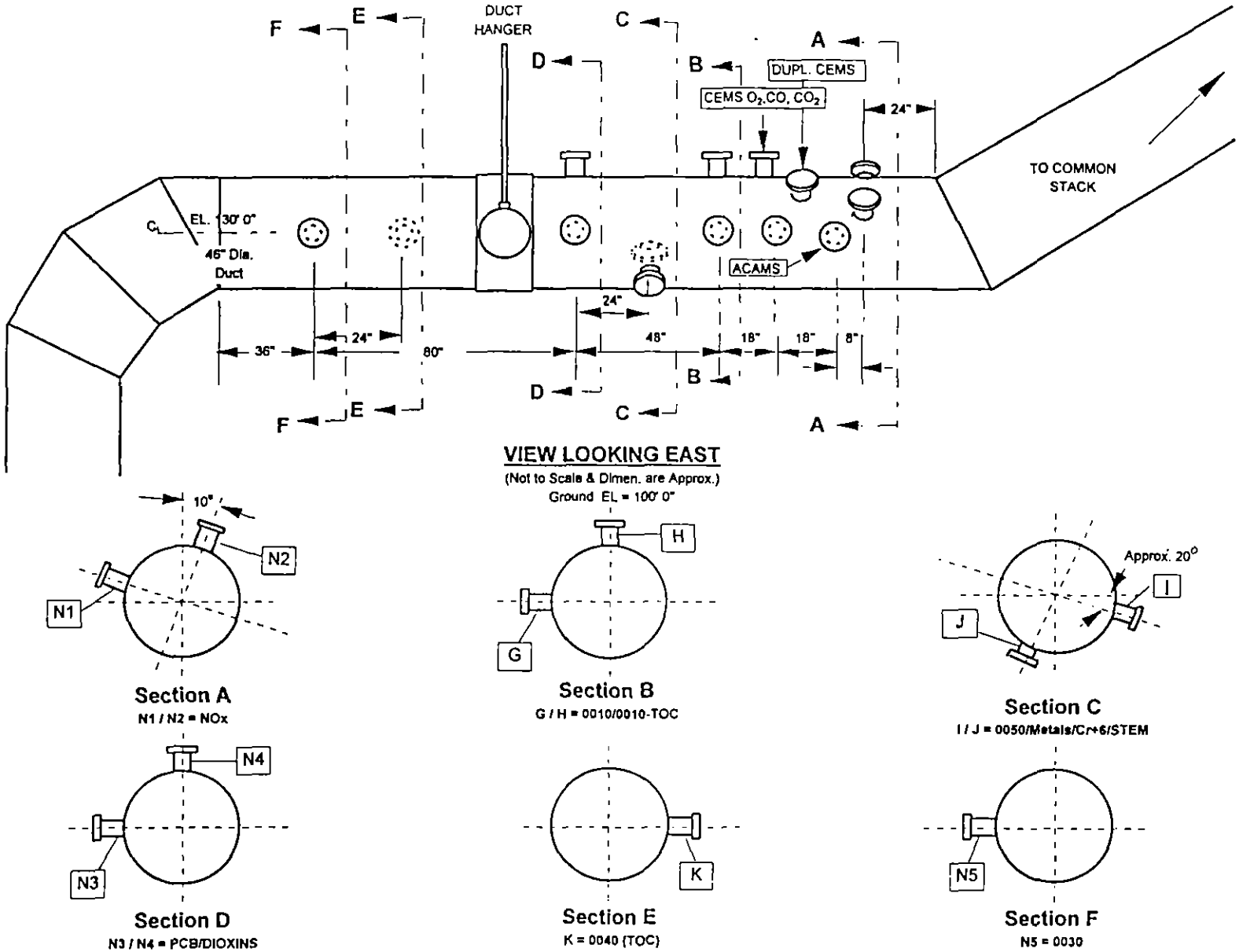

TABLE 2-5. PARTICULATE MATTER EMISSIONS SUMMARY
Deactivation Furnace System Agent Trial Burn

Parameter	*Units*	*Run 1*	*Run 3*	*Run 4*	*Average*
Sampling Location		Outlet Duct	Outlet Duct	Outlet Duct	
Date		7-Jan-97	10-Jan-97	11-Jan-97	
Start Time		0832	0840	0830	
Stop Time		1303	1125	1115	
Net Sampling Time	minutes	120	120	120	120
Sample Volume	dscf	74.119	66.197	67.171	69.162
Stack Gas Flow Rate	dscf/hr	660,000	610,000	610,000	630,000
Stack Gas Temperature	°F	236	239	238	238
Stack Gas Moisture	%	49.2	49.2	48.7	49.0
O_2 Concentration at Stack, % dry	%	9.0	9.5	9.6	9.4
CO_2 Concentration at Stack, % dry	%	6.5	7.0	7.1	6.9
Particulate Catch	mg	5.4	5.6	7.8	6.3
Particulate Catch, Filter	mg	12.8	0.4	9.8	7.7
Particulate Catch, Total	mg	18.2	6.0	17.6	13.9
Particulate Concentration	mg/dscm	8.7	3.2	9.3	7.0
Particulate Concentration	mg/dscm @ 7% O_2	10.1	3.9	11.4	8.5
Particulate Concentration	gr/dscf @ 7% O_2	0.0044	0.0017	0.0050	0.0037
Particulate Emission Rate	lbs/hr	0.36	0.12	0.35	0.28

2.5.2 HCl and HF Emissions

The HCl and HF emissions were determined using the impinger catch of the EPA Method 0050 sampling train used for the PM determination. The results of the three agent performance runs are presented in Table 2-6. Hydrogen chloride was not detected in any of the three runs at the Practical Quantitation Limits (PQL) of 1.9, 1.9 and 1.8 mg/sample, respectively. The resulting average HCl concentration at those PQLs was <0.03 mg/dscf with an emission rate of <0.04 lbs/hr. Hydrogen fluoride was not detected in any of the three runs at PQLs of 1.9, 1.9 and 1.8 mg/sample, respectively. The resulting average HF concentration at those PQLs was <0.03 mg/dscf with an emission rate of <0.04 lbs/hr.

2.5.3 Volatile Organic Emissions

A total of six tube pairs were collected during each ATB performance run at the DFS outlet sampling location (Port N5) using EPA Method 0030 VOST. Table 2-7 presents the results for these performance runs. During Runs 1, 3, and 4 there were twelve compounds that were detected in at least one of the tubes analyzed. Compounds that were not detected on any of the tubes in a given run are indicated on the table by an "ND" beside the mass collected. Most of the detected compounds were brominated and chlorinated compounds and common organic solvents. The same twelve compounds were detected in Runs 1 and 3. In Run 4, acetone and 2-butanone were detected but chlorobenzene or ethyl benzene were not.

2.5.4 Volatile TOC Emissions

Sampling for VTOCs was conducted during ATB Runs 1, 3, and 4 at the DFS duct sampling location (Port K) using an EPA Method 0040 sampling train for the determination of VTOCs. The bag samples were analyzed on-site via GC/FID; the train condensate samples were analyzed by Quanterra via GC/FID, as well. Table 2-8 presents the results of these performance runs. During Run 1, a total of three sample bags and three condensates were analyzed. During Runs 3 and 4, a single sample bag and condensate were analyzed. The second sample of the day was a field spike or field control sample. Field blanks were collected and analyzed as well. No VTOCs were detected in any of the bag samples during any of the runs. The first condensate sample from Run 1 yielded a result of 0.30 μg C_1 - C_8, which is slightly above the PQL of 0.22 μg. A duplicate analysis of the sample yielded a non-detect.

2.5.5 Semi-Volatile Organic Emissions

Three six-hour samples were collected at the DFS duct sampling location (Ports G and H) using an EPA Method 0010 sampling train for the determination of SVOCs. The sampling train yields three samples which were analyzed individually. Table 2-9 presents a summary of the results for these performance runs. All compounds on the 8270 list were non-detects, with the exception of acetophenone (Run 3), benzaldehyde (Runs 3 and 4), dimethyl phthalate (Run

TABLE 2-6. HYDROGEN CHLORIDE AND HYDROGEN FLUORIDE EMISSIONS SUMMARY

Deactivation Furnace System Agent Trial Burn

Parameter	*Units*	*Run 1*	*Run 3*	*Run 4*	*Average*
Sampling Location		Outlet Duct	Outlet Duct	Outlet Duct	
Date		7-Jan-97	10-Jan-97	11-Jan-97	
Start Time		0832	0840	0830	
Stop Time		1303	1125	1115	
Net Sampling Time	minutes	120	120	120	120
Sample Volume	dscf	74.119	66.197	67.171	69.162
Stack Gas Flow Rate	dscf/hr	660,000	610,000	610,000	630,000
Stack Gas Temperature	°F	236	239	238	238
Stack Gas Moisture	%	49.2	49.2	48.7	49.0
O_2 Concentration at Stack, % dry	%	9.0	9.5	9.6	9.4
CO_2 Concentration at Stack, % dry	%	6.5	7.0	7.1	6.9
HCl Catch	mg	< 1.9	< 1.9	< 1.8	< 1.9
HCl Concentration	mg/dscf	< 0.03	< 0.03	< 0.03	< 0.03
HCl Emission Rate	lbs/hr	< 0.04	< 0.04	< 0.04	< 0.04
HF Catch	mg	< 1.9	< 1.9	< 1.8	< 1.9
HF Concentration	mg/dscf	< 0.03	< 0.03	< 0.03	< 0.03
HF Emission Rate	lbs/hr	< 0.04	< 0.04	< 0.04	< 0.04

TABLE 2-7 VOLATILE EMISSIONS SUMMARY

Deactivation Furnace System Agent Trial Burn

Parameter		Units	Run 1	Run 3	Run 4	Average
Sampling Location			Outlet Duct	Outlet Duct	Outlet Duct	
Date			7-Jan-97	10-Jan-97	11-Jan-97	
Start Time			8:50	8:45	8:40	
Stop Time			15:45	16:35	15:45	
Net Sampling Time		minutes	120	120	120	120
Sample Volume (6 tube pairs)		liters	103.1	99.2	99.9	100
Stack Gas Flow Rate *		dscf/hr	650,000	630,000	600,000	610,000
Chloromethane (Methyl Chlori	Total Catch	ng	< 479	< 619	< 335	< 478
	Concentration	ug/m^3	< 4.6	< 6.2	< 3.4	< 4.7
	Emission Rate	lbs/hr	< 1.9E-04	< 2.5E-04	< 1.3E-04	< 1.9E-04
Vinyl Chloride	Total Catch	ng	< 200 ND	< 200 ND	< 200 ND	< 200 ND
	Concentration	ug/m^3	< 1.9	< 2.0	< 2.0	< 2.0
	Emission Rate	lbs/hr	< 7.9E-05	< 7.9E-05	< 7.5E-05	< 7.8E-05
Bromomethane (Methyl Bromi	Total Catch	ng	< 592	< 385	< 288	< 422
	Concentration	ug/m^3	< 5.7	< 3.9	< 2.9	< 4.2
	Emission Rate	lbs/hr	< 2.3E-04	< 1.5E-04	< 1.1E-04	< 1.6E-04
Chloroethane (Ethyl Chloride)	Total Catch	ng	< 200 ND	< 200 ND	< 200 ND	< 200 ND
	Concentration	ug/m^3	< 1.9	< 2.0	< 2.0	< 2.0
	Emission Rate	lbs/hr	< 7.9E-05	< 7.9E-05	< 7.5E-05	< 7.8E-05
Trichlorofluoromethane	Total Catch	ng	< 200 ND	< 200 ND	< 200 ND	< 200 ND
	Concentration	ug/m^3	< 1.9	< 2.0	< 2.0	< 2.0
	Emission Rate	lbs/hr	< 7.9E-05	< 7.9E-05	< 7.5E-05	< 7.8E-05
1,1-Dichloroethene	Total Catch	ng	< 200 ND	< 200 ND	< 200 ND	< 200 ND
	Concentration	ug/m^3	< 1.9	< 2.0	< 2.0	< 2.0
	Emission Rate	lbs/hr	< 7.9E-05	< 7.9E-05	< 7.5E-05	< 7.8E-05
Carbon Disulfide	Total Catch	ng	< 1,000 ND	< 1,000 ND	< 1,000 ND	< 1,000 ND
	Concentration	ug/m^3	< 10	< 10	< 10	< 10
	Emission Rate	lbs/hr	< 3.9E-04	< 4.0E-04	< 3.7E-04	< 3.9E-04
Acetone	Total Catch	ng	< 1,000 ND	< 1,770 ND	< 1,159	< 1,310
	Concentration	ug/m^3	< 10	< 18	< 12	< 13
	Emission Rate	lbs/hr	< 3.9E-04	< 7.0E-04	< 4.3E-04	< 5.1E-04
Methylene Chloride	Total Catch	ng	< 364	< 578	< 472	< 471
	Concentration	ug/m^3	< 3.5	< 5.8	< 4.7	< 4.7
	Emission Rate	lbs/hr	< 1.4E-04	< 2.3E-04	< 1.8E-04	< 1.8E-04
trans-1,2-Dichloroethene	Total Catch	ng	< 200 ND	< 200 ND	< 200 ND	< 200 ND
	Concentration	ug/m^3	< 1.9	< 2.0	< 2.0	< 2.0
	Emission Rate	lbs/hr	< 7.9E-05	< 7.9E-05	< 7.5E-05	< 7.8E-05
1,1-Dichloroethane	Total Catch	ng	< 200 ND	< 200 ND	< 200 ND	< 200 ND
	Concentration	ug/m^3	< 1.9	< 2.0	< 2.0	< 2.0
	Emission Rate	lbs/hr	< 7.9E-05	< 7.9E-05	< 7.5E-05	< 7.8E-05
Vinyl acetate	Total Catch	ng	< 1,000 ND	< 1,000 ND	< 1,000 ND	< 1,000 ND
	Concentration	ug/m^3	< 10	< 10	< 10	< 10
	Emission Rate	lbs/hr	< 3.9E-04	< 4.0E-04	< 3.7E-04	< 3.9E-04

TABLE 2-7. (Continued) VOLATILE EMISSIONS SUMMARY

Deactivation Furnace System Agent Trial Burn

Parameter		Units	Run 1	Run 3	Run 4	Average
2-Butanone (MEK)	Total Catch	ng	< 1,000 ND	< 4,023 ND	< 1,033	< 2,019
	Concentration	ug/m^3	< 10	< 41	< 10	< 20
	Emission Rate	lbs/hr	< 3.9E-04	< 1.6E-03	< 3.9E-04	< 7.9E-04
Chloroform	Total Catch	ng	< 225	< 218	< 235	< 226
	Concentration	ug/m^3	< 2.2	< 2.2	< 2.4	< 2.2
	Emission Rate	lbs/hr	< 8.9E-05	< 8.6E-05	< 8.8E-05	< 8.8E-05
1,1,1-Trichloroethane (TCA)	Total Catch	ng	< 200 ND	< 200 ND	< 200 ND	< 200 ND
	Concentration	ug/m^3	< 1.9	< 2.0	< 2.0	< 2.0
	Emission Rate	lbs/hr	< 7.9E-05	< 7.9E-05	< 7.5E-05	< 7.8E-05
Carbon Tetrachloride	Total Catch	ng	< 200 ND	< 200 ND	< 200 ND	< 200 ND
	Concentration	ug/m^3	< 1.9	< 2.0	< 2.0	< 2.0
	Emission Rate	lbs/hr	< 7.9E-05	< 7.9E-05	< 7.5E-05	< 7.8E-05
Benzene	Total Catch	ng	< 239	< 296	< 328	< 288
	Concentration	ug/m^3	< 2.3	< 3.0	< 3.3	< 2.9
	Emission Rate	lbs/hr	< 9.4E-05	< 1.2E-04	< 1.2E-04	< 1.1E-04
1,2-Dichloroethane (EDC)	Total Catch	ng	< 200 ND	< 200 ND	< 200 ND	< 200 ND
	Concentration	ug/m^3	< 1.9	< 2.0	< 2.0	< 2.0
	Emission Rate	lbs/hr	< 7.9E-05	< 7.9E-05	< 7.5E-05	< 7.8E-05
Trichloroethene (TCE)	Total Catch	ng	< 200 ND	< 200 ND	< 200 ND	< 200 ND
	Concentration	ug/m^3	< 1.9	< 2.0	< 2.0	< 2.0
	Emission Rate	lbs/hr	< 7.9E-05	< 7.9E-05	< 7.5E-05	< 7.8E-05
1,2-Dichloropropane	Total Catch	ng	< 200 ND	< 200 ND	< 200 ND	< 200 ND
	Concentration	ug/m^3	< 1.9	< 2.0	< 2.0	< 2.0
	Emission Rate	lbs/hr	< 7.9E-05	< 7.9E-05	< 7.5E-05	< 7.8E-05
Bromodichloromethane	Total Catch	ng	< 287	< 284	< 310	< 294
	Concentration	ug/m^3	< 2.8	< 2.9	< 3.1	< 2.9
	Emission Rate	lbs/hr	< 1.1E-04	< 1.1E-04	< 1.2E-04	< 1.1E-04
trans-1,3-Dichloropropene	Total Catch	ng	< 200 ND	< 200 ND	< 200 ND	< 200 ND
	Concentration	ug/m^3	< 1.9	< 2.0	< 2.0	< 2.0
	Emission Rate	lbs/hr	< 7.9E-05	< 7.9E-05	< 7.5E-05	< 7.8E-05
4-Methyl-2-pentanone (MIBK	Total Catch	ng	< 1,000 ND	< 1,000 ND	< 1,000 ND	< 1,000 ND
	Concentration	ug/m^3	< 10	< 10	< 10	< 10
	Emission Rate	lbs/hr	< 3.9E-04	< 4.0E-04	< 3.7E-04	< 3.9E-04
Toluene	Total Catch	ng	< 257	< 300	< 216	< 258
	Concentration	ug/m^3	< 2.5	< 3.0	< 2.2	< 2.6
	Emission Rate	lbs/hr	< 1.0E-04	< 1.2E-04	< 8.1E-05	< 1.0E-04
cis-1,3-Dichloropropene	Total Catch	ng	< 200 ND	< 200 ND	< 200 ND	< 200 ND
	Concentration	ug/m^3	< 1.9	< 2.0	< 2.0	< 2.0
	Emission Rate	lbs/hr	< 7.9E-05	< 7.9E-05	< 7.5E-05	< 7.8E-05
1,1,2-Trichloroethane	Total Catch	ng	< 200 ND	< 200 ND	< 200 ND	< 200 ND
	Concentration	ug/m^3	< 1.9	< 2.0	< 2.0	< 2.0
	Emission Rate	lbs/hr	< 7.9E-05	< 7.9E-05	< 7.5E-05	< 7.8E-05
Tetrachloroethene (PCE)	Total Catch	ng	< 200 ND	< 446 ND	< 200 ND	< 282 ND
	Concentration	ug/m^3	< 1.9	< 4.5	< 2.0	< 2.8
	Emission Rate	lbs/hr	< 7.9E-05	< 1.8E-04	< 7.5E-05	< 1.1E-04

TABLE 2-7. (Continued) VOLATILE EMISSIONS SUMMARY

Deactivation Furnace System Agent Trial Burn

Parameter		Units	Run 1	Run 3	Run 4	Average
2-Hexanone	Total Catch	ng	< 1,000 ND	< 1,000 ND	< 1,000 ND	< 1,000 ND
	Concentration	ug/m^3	< 10	< 10	< 10	< 10
	Emission Rate	lbs/hr	< 3.9E-04	< 4.0E-04	< 3.7E-04	< 3.9E-04
Dibromochloromethane	Total Catch	ng	< 395	< 422	< 474	< 430
	Concentration	ug/m^3	< 3.8	< 4.3	< 4.7	< 4.3
	Emission Rate	lbs/hr	< 1.6E-04	< 1.7E-04	< 1.8E-04	< 1.7E-04
Chlorobenzene	Total Catch	ng	< 207	< 200	< 200 ND	< 202
	Concentration	ug/m^3	< 2.0	< 2.0	< 2.0	< 2.0
	Emission Rate	lbs/hr	< 8.1E-05	< 7.9E-05	< 7.5E-05	< 7.9E-05
Ethylbenzene	Total Catch	ng	< 203	< 200	< 200 ND	< 201
	Concentration	ug/m^3	< 2.0	< 2.0	< 2.0	< 2.0
	Emission Rate	lbs/hr	< 8.0E-05	< 7.9E-05	< 7.5E-05	< 7.8E-05
m,p-Xylene	Total Catch	ng	< 200 ND	< 200 ND	< 200 ND	< 200 ND
	Concentration	ug/m^3	< 1.9	< 2.0	< 2.0	< 2.0
	Emission Rate	lbs/hr	< 7.9E-05	< 7.9E-05	< 7.5E-05	< 7.8E-05
o-Xylene	Total Catch	ng	< 200 ND	< 200 ND	< 200 ND	< 200 ND
	Concentration	ug/m^3	< 1.9	< 2.0	< 2.0	< 2.0
	Emission Rate	lbs/hr	< 7.9E-05	< 7.9E-05	< 7.5E-05	< 7.8E-05
Styrene	Total Catch	ng	< 200 ND	< 910 ND	< 200 ND	< 437 ND
	Concentration	ug/m^3	< 1.9	< 9.2	< 2.0	< 4.4
	Emission Rate	lbs/hr	< 7.9E-05	< 3.6E-04	< 7.5E-05	< 1.7E-04
Bromoform	Total Catch	ng	< 306	< 349	< 337	< 331
	Concentration	ug/m^3	< 3.0	< 3.5	< 3.4	< 3.3
	Emission Rate	lbs/hr	< 1.2E-04	< 1.4E-04	< 1.3E-04	< 1.3E-04
1,1,2,2-Tetrachloroethane	Total Catch	ng	< 200 ND	< 200 ND	< 200 ND	< 200 ND
	Concentration	ug/m^3	< 1.9	< 2.0	< 2.0	< 2.0
	Emission Rate	lbs/hr	< 7.9E-05	< 7.9E-05	< 7.5E-05	< 7.8E-05
Bromoethene (Vinyl Bromide)	Total Catch	ng	< 1,000 ND	< 1,000 ND	< 1,000 ND	< 1,000 ND
	Concentration	ug/m^3	< 10	< 10	< 10	< 10
	Emission Rate	lbs/hr	< 3.9E-04	< 4.0E-04	< 3.7E-04	< 3.9E-04
1,3-Butadiene	Total Catch	ng	< 1,000 ND	< 1,000 ND	< 1,000 ND	< 1,000 ND
	Concentration	ug/m^3	< 10	< 10	< 10	< 10
	Emission Rate	lbs/hr	< 3.9E-04	< 4.0E-04	< 3.7E-04	< 3.9E-04
2-Chloropropane	Total Catch	ng	< 200 ND	< 200 ND	< 200 ND	< 200 ND
	Concentration	ug/m^3	< 1.9	< 2.0	< 2.0	< 2.0
	Emission Rate	lbs/hr	< 7.9E-05	< 7.9E-05	< 7.5E-05	< 7.8E-05
1,2-Dibromoethane	Total Catch	ng	< 200 ND	< 200 ND	< 200 ND	< 200 ND
(Ethylene Dibromide)	Concentration	ug/m^3	< 1.9	< 2.0	< 2.0	< 2.0
	Emission Rate	lbs/hr	< 7.9E-05	< 7.9E-05	< 7.5E-05	< 7.8E-05
Dibromomethane	Total Catch	ng	< 200 ND	< 200 ND	< 200 ND	< 200 ND
	Concentration	ug/m^3	< 1.9	< 2.0	< 2.0	< 2.0
	Emission Rate	lbs/hr	< 7.9E-05	< 7.9E-05	< 7.5E-05	< 7.8E-05
cis-1,4-Dichloro-2-butene	Total Catch	ng	< 200 ND	< 200 ND	< 200 ND	< 200 ND
	Concentration	ug/m^3	< 1.9	< 2.0	< 2.0	< 2.0
	Emission Rate	lbs/hr	< 7.9E-05	< 7.9E-05	< 7.5E-05	< 7.8E-05
trans-1,4-Dichloro-2-butene	Total Catch	ng	< 200 ND	< 200 ND	< 200 ND	< 200 ND
	Concentration	ug/m^3	< 1.9	< 2.0	< 2.0	< 2.0
	Emission Rate	lbs/hr	< 7.9E-05	< 7.9E-05	< 7.5E-05	< 7.8E-05

TABLE 2-7. (Continued) VOLATILE EMISSIONS SUMMARY

Deactivation Furnace System Agent Trial Burn

Parameter		*Units*	*Run 1*	*Run 3*	*Run 4*	*Average*
Dichlorodifluoromethane	Total Catch	ng	< 200 ND	< 200 ND	< 200 ND	< 200 ND
(Freon 12)	Concentration	ug/m^3	< 1.9	< 2.0	< 2.0	< 2.0
	Emission Rate	lbs/hr	< 7.9E-05	< 7.9E-05	< 7.5E-05	< 7.8E-05
n-Hexane	Total Catch	ng	< 207	< 218	< 209	< 211
	Concentration	ug/m^3	< 2.0	< 2.2	< 2.1	< 2.1
	Emission Rate	lbs/hr	< 8.1E-05	< 8.6E-05	< 7.8E-05	< 8.2E-05
Iodomethane	Total Catch	ng	< 200 ND	< 202 ND	< 200 ND	< 201 ND
	Concentration	ug/m^3	< 1.9	< 2.0	< 2.0	< 2.0
	Emission Rate	lbs/hr	< 7.9E-05	< 8.0E-05	< 7.5E-05	< 7.8E-05
2-Propanol	Total Catch	ng	< 20,000 ND	< 20,000 ND	< 20,000 ND	< 20,000 ND
	Concentration	ug/m^3	< 190	< 200	< 200	< 200
	Emission Rate	lbs/hr	< 7.7E-03	< 7.9E-03	< 7.5E-03	< 7.7E-03
1,1,1,2-Tetrachloroethane	Total Catch	ng	< 200 ND	< 200 ND	< 200 ND	< 200 ND
	Concentration	ug/m^3	< 1.9	< 2.0	< 2.0	< 2.0
	Emission Rate	lbs/hr	< 7.9E-05	< 7.9E-05	< 7.5E-05	< 7.8E-05
1,1,2-Trichloro-1,2,2-trifluoro	Total Catch	ng	< 200 ND	< 200 ND	< 200 ND	< 200 ND
(Freon 113)	Concentration	ug/m^3	< 1.9	< 2.0	< 2.0	< 2.0
	Emission Rate	lbs/hr	< 7.9E-05	< 7.9E-05	< 7.5E-05	< 7.8E-05
1,2,3-Trichloropropane	Total Catch	ng	< 200 ND	< 200 ND	< 200 ND	< 200 ND
	Concentration	ug/m^3	< 1.9	< 2.0	< 2.0	< 2.0
	Emission Rate	lbs/hr	< 7.9E-05	< 7.9E-05	< 7.5E-05	< 7.8E-05

* Taken from the highest recorded flow for a 6-hour sampling train to yield maximum volatile organic emissions.

No blank corrections have been made to these data. If undetected in the analysis, the PQL is reported.

An "<" indicates that the compound was not detected in at least one of the trap pairs or condensate.

An "ND" indicates the compound was not detected in any of the six trap pairs or condensate for each trial burn run, nor in the average of the three runs.

TABLE 2-8. VOLATILE TOC EMISSIONS SUMMARY

Deactivation Furnace System Agent Trial Burn

Parameter		Units	DFS-ATB-Run 1 Averages		DFS-ATB-Run 3		DFS-ATB-Run 4		DFS-ATB-Runs 1, 3 & 4 Averages	
			Bags	Condensate	Bag 1	Condens.-1	Bag 1	Condens.-1	Bags	Condensate
Sampling Location					Outlet Duct		Outlet Duct			
Date					10-Jan-97		11-Jan-97			
Start Time					08:51		08:43			
Stop Time					09:51		09:43			
Net Sampling Time		minutes	60		60		60		60	
Sample Volume		liters	21.135		21.176		21.219		21.177	
Stack Gas Flow Rate *		dscf/hr	650,000		625,704		599,442		625,049	
Bag ID #					#110		#102			
Injection No. 1 - Data File ID #					NV-F0427		NV-F0455			
Injection No. 1 - Time of Analysis					10:53		11:12			
Injection No. 2 - Data File ID #					NV-F0428		NV-F0456			
Injection No. 2 - Time of Analysis					11:16		11:30			
C1 Compounds	Concentration	ppm	< 2.4		< 2.6		< 2.4		< 2.5	
	Concentration	µg/m³	< 1,600		< 1,700		< 1,600		< 1,600	
	Emission Rate	lbs/hr	< 0.065		< 0.066		< 0.060		< 0.064	
C2 Compounds	Concentration	ppm	< 0.25		< 0.25		< 0.25		< 0.25	
	Concentration	µg/m³	< 312		< 310		< 310		< 311	
	Emission Rate	lbs/hr	< 0.013		< 0.012		< 0.012		< 0.012	
C3 Compounds	Concentration	ppm	< 0.25		< 0.25		< 0.25		< 0.25	
	Concentration	µg/m³	< 458		< 460		< 460		< 459	
	Emission Rate	lbs/hr	< 0.019		< 0.018		< 0.017		< 0.018	
C4 Compounds	Concentration	ppm	< 0.25		< 0.25		< 0.25		< 0.25	
	Concentration	µg/m³	< 603		< 600		< 600		< 601	
	Emission Rate	lbs/hr	< 0.025		< 0.023		< 0.022		< 0.024	
C5 Compounds	Concentration	ppm	< 0.25		< 0.25		< 0.25		< 0.25	
	Concentration	µg/m³	< 749		< 750		< 750		< 750	
	Emission Rate	lbs/hr	< 0.031		< 0.029		< 0.028		< 0.029	
C6 Compounds	Total Catch	µg		< 0.25 [1]		< 0.22 [1]		< 0.22 [1]		< 0.23 [1]
	Concentration	ppm	< 0.25		< 0.25		< 0.25		< 0.25	
	Concentration	µg/m³	< 894	< 12	< 890	< 10	< 890	< 10	< 891	< 11
	Emission Rate	lbs/hr	< 0.037	< 4.85E-04	< 0.035	< 4.1E-04	< 0.033	< 3.9E-04	< 0.035	< 4.3E-04
C7 Compounds	Total Catch	µg		< 0.22		< 0.22		< 0.22		< 0.22
	Concentration	ppm	< 0.25		< 0.25		< 0.25		< 0.25	
	Concentration	µg/m³	< 1042	< 11	< 1,000	< 10	< 1,000	< 10	< 1,014	< 10
	Emission Rate	lbs/hr	< 0.043	< 4.32E-04	< 0.039	< 4.1E-04	< 0.037	< 3.9E-04	< 0.040	< 4.1E-04
C8 Compounds	Total Catch	µg		< 0.22		< 0.22		< 0.22		< 0.22
	Concentration	ppm	< 1.1		< 1.0		< 1.0		< 1.0	
	Concentration	µg/m³	< 5175	< 11	< 4,900	< 10	< 4,900	< 10	< 4,992	< 10
	Emission Rate	lbs/hr	< 0.21	< 4.32E-04	< 0.19	< 4.1E-04	< 0.18	< 3.9E-04	< 0.20	< 4.1E-04

* Taken from the highest recorded flow for a 6-hour sampling train to yield maximum volatile organic emissions

[1] - Represents C1 through C6 groups.

TABLE 2-9. SEMIVOLATILE ORGANICS EMISSIONS SUMMARY
Deactivation Furnace System Agent Trial Burn

Parameter		Units	Run 1	Run 3	Run 4	Average
Sampling Location			Outlet Duct	Outlet Duct	Outlet Duct	
Date			7-Jan-97	10-Jan-97	11-Jan-97	
Start Time			0831	0840	0849	
Stop Time			1613	1656	1619	
Net Sampling Time		minutes	120	120	120	120
Sample Volume		dscf	272.753	199 892	191.502	221 382
Stack Gas Flow Rate		dscf/hr	640,000	590,000	570,000	600,000
Stack Gas Temperature		deg F	236.1	236.6	236.1	236.3
Stack Gas Moisture		%	48.6	49.6	48 8	49.0
O_2 Concentration		%	9.0	9.5	9 6	9 4
CO_2 Concentration		%	6.5	7 0	7 1	6 9
Acenaphthene	Total Catch	µg	< 40 ND	< 30 ND	< 30 ND	< 33 ND
	Concentration	µg/dscf	< 0 15	< 0 15	< 0 16	< 0 15
	Emission Rate	lbs/hr	< 2 1E-04	< 2 0E-04	< 2 0E-04	< 2 0E-04
Acenapthylene	Total Catch	µg	< 40 ND	< 30 ND	< 30 ND	< 33 ND
	Concentration	µg/dscf	< 0.15	< 0 15	< 0 16	< 0 15
	Emission Rate	lbs/hr	< 2 1E-04	< 2 0E-04	< 2 0E-04	< 2 0E-04
Acetophenone	Total Catch	µg	< 40 ND	< 32	< 30 ND	< 34 ND
	Concentration	µg/dscf	< 0 15	< 0 16	< 0 16	< 0 15
	Emission Rate	lbs/hr	< 2 1E-04	< 2 1E-04	< 2 0E-04	< 2 0E-04
2-Acetylaminofluorene	Total Catch	µg	< 400 ND	< 300 ND	< 300 ND	< 333 ND
	Concentration	µg/dscf	< 1 47	< 1 50	< 1 57	< 1 51
	Emission Rate	lbs/hr	< 2.1E-03	< 2 0E-03	< 2 0E-03	< 2 0E-03
4-Aminobiphenyl	Total Catch	µg	< 40 ND	< 30 ND	< 30 ND	< 33 ND
	Concentration	µg/dscf	< 0.15	< 0 15	< 0 16	< 0 15
	Emission Rate	lbs/hr	< 2 1E-04	< 2 0E-04	< 2 0E-04	< 2 0E-04
3-Amino-9-ethycarbazole	Total Catch	µg	< 0 ND	< 0 ND	< 0 ND	< 0 ND
	Concentration	µg/dscf	< 0 00	< 0 00	< 0 00	< 0 00
	Emission Rate	lbs/hr	< 0 0E+00	< 0 0E+00	< 0 0E+00	< 0 0E+00
Aniline	Total Catch	µg	< 40 ND	< 30 ND	< 30 ND	< 33 ND
	Concentration	µg/dscf	< 0.15	< 0 15	< 0 16	< 0 15
	Emission Rate	lbs/hr	< 2 1E-04	< 2 0E-04	< 2 0E-04	< 2 0E-04
Anthracene	Total Catch	µg	< 40 ND	< 30 ND	< 30 ND	< 33 ND
	Concentration	µg/dscf	< 0 15	< 0 15	< 0 16	< 0 15
	Emission Rate	lbs/hr	< 2 1E-04	< 2 0E-04	< 2 0E-04	< 2 0E-04
Aramite	Total Catch	µg	< 40 ND	< 30 ND	< 30 ND	< 33 ND
	Concentration	µg/dscf	< 0 15	< 0 15	< 0.16	< 0 15
	Emission Rate	lbs/hr	< 2 1E-04	< 2 0E-04	< 2 0E-04	< 2 0E-04
[illegible]zidine	Total Catch	µg	< 400 ND	< 300 ND	< 300 ND	< 333 ND
	Concentration	µg/dscf	< 1.5	< 1 5	< 1 6	< 1.5
	Emission Rate	lbs/hr	< 2 1E-03	< 2.0E-03	< 2 0E-03	< 2 0E-03
Benzoic acid	Total Catch	µg	< 400 ND	< 300 ND	< 300 ND	< 333 ND
	Concentration	µg/dscf	< 1.5	< 1 5	< 1.6	< 1.5
	Emission Rate	lbs/hr	< 2.1E-03	< 2 0E-03	< 2 0E-03	< 2 0E-03
Benzo (a) anthracene	Total Catch	µg	< 40 ND	< 30 ND	< 30 ND	< 33 ND
	Concentration	µg/dscf	< 0.15	< 0 15	< 0.16	< 0 15
	Emission Rate	lbs/hr	< 2 1E-04	< 2 0E-04	< 2 0E-04	< 2 0E-04
Benzo (b) fluoranthrene	Total Catch	µg	< 40 ND	< 30 ND	< 30 ND	< 33 ND
	Concentration	µg/dscf	< 0.15	< 0.15	< 0 16	< 0.15
	Emission Rate	lbs/hr	< 2.1E-04	< 2 0E-04	< 2 0E-04	< 2 0E-04

TABLE 2-9. (Continued) SEMIVOLATILE ORGANICS EMISSIONS SUMMARY
Deactivation Furnace System Agent Trial Burn

Parameter		Units	Run 1	Run 3	Run 4	Average
Benzo (j) fluoranthrene	Total Catch	µg	< 40 ND	< 30 ND	< 30 ND	< 33 ND
	Concentration	µg/dscf	< 0.15	< 0.15	< 0.16	< 0.15
	Emission Rate	lbs/hr	< 2.1E-04	< 2.0E-04	< 2.0E-04	< 2.0E-04
Benzo (k) fluoranthrene	Total Catch	µg	< 40 ND	< 30 ND	< 30 ND	< 33 ND
	Concentration	µg/dscf	< 0.15	< 0.15	< 0.16	< 0.15
	Emission Rate	lbs/hr	< 2.1E-04	< 2.0E-04	< 2.0E-04	< 2.0E-04
Benzo (g,h,i) perylene	Total Catch	µg	< 40 ND	< 30 ND	< 30 ND	< 33 ND
	Concentration	µg/dscf	< 0.15	< 0.15	< 0.16	< 0.15
	Emission Rate	lbs/hr	< 2.1E-04	< 2.0E-04	< 2.0E-04	< 2.0E-04
Benzo (a) pyrene	Total Catch	µg	< 40 ND	< 30 ND	< 30 ND	< 33 ND
	Concentration	µg/dscf	< 0.15	< 0.15	< 0.16	< 0.15
	Emission Rate	lbs/hr	< 2.1E-04	< 2.0E-04	< 2.0E-04	< 2.0E-04
Benzo (e) pyrene	Total Catch	µg	< 40 ND	< 30 ND	< 30 ND	< 33 ND
	Concentration	µg/dscf	< 0.15	< 0.15	< 0.16	< 0.15
	Emission Rate	lbs/hr	< 2.1E-04	< 2.0E-04	< 2.0E-04	< 2.0E-04
Benzyl alcohol	Total Catch	µg	< 40 ND	< 30 ND	< 30 ND	< 33 ND
	Concentration	µg/dscf	< 0.15	< 0.15	< 0.16	< 0.15
	Emission Rate	lbs/hr	< 2.1E-04	< 2.0E-04	< 2.0E-04	< 2.0E-04
Benzaldehyde	Total Catch	µg	< 40 ND	< 89	< 38	< 56 ND
	Concentration	µg/dscf	< 0.15	< 0.45	< 0.20	< 0.26
	Emission Rate	lbs/hr	< 2.1E-04	< 5.8E-04	< 2.5E-04	< 3.5E-04
Benzenethiol	Total Catch	µg	< 400 ND	< 300 ND	< 300 ND	< 333 ND
	Concentration	µg/dscf	< 1.5	< 1.50	< 1.57	< 1.51
	Emission Rate	lbs/hr	< 2.1E-03	< 2.0E-03	< 2.0E-03	< 2.0E-03
Biphenyl	Total Catch	µg	< 40 ND	< 30 ND	< 30 ND	< 33 ND
	Concentration	µg/dscf	< 0.15	< 0.15	< 0.16	< 0.15
	Emission Rate	lbs/hr	< 2.1E-04	< 2.0E-04	< 2.0E-04	< 2.0E-04
4-Bromophenyl phenyl ether	Total Catch	µg	< 40 ND	< 30 ND	< 30 ND	< 33 ND
	Concentration	µg/dscf	< 0.15	< 0.15	< 0.16	< 0.15
	Emission Rate	lbs/hr	< 2.1E-04	< 2.0E-04	< 2.0E-04	< 2.0E-04
Butyl benzyl phthalate	Total Catch	µg	< 40 ND	< 30 ND	< 30 ND	< 33 ND
	Concentration	µg/dscf	< 0.15	< 0.15	< 0.16	< 0.15
	Emission Rate	lbs/hr	< 2.1E-04	< 2.0E-04	< 2.0E-04	< 2.0E-04
2-sec-Butyl-4,6-dinitro-phenol	Total Catch	µg	< 40 ND	< 30 ND	< 30 ND	< 33 ND
	Concentration	µg/dscf	< 0.15	< 0.15	< 0.16	< 0.15
	Emission Rate	lbs/hr	< 2.1E-04	< 2.0E-04	< 2.0E-04	< 2.0E-04
4-Chloroaniline	Total Catch	µg	< 40 ND	< 30 ND	< 30 ND	< 33 ND
	Concentration	µg/dscf	< 0.15	< 0.15	< 0.16	< 0.15
	Emission Rate	lbs/hr	< 2.1E-04	< 2.0E-04	< 2.0E-04	< 2.0E-04
bis(2-Chloroethoxy)-methane	Total Catch	µg	< 40 ND	< 30 ND	< 30 ND	< 33 ND
	Concentration	µg/dscf	< 0.15	< 0.15	< 0.16	< 0.15
	Emission Rate	lbs/hr	< 2.1E-04	< 2.0E-04	< 2.0E-04	< 2.0E-04
bis(2-Chloroethyl) ether	Total Catch	µg	< 40 ND	< 30 ND	< 30 ND	< 33 ND
	Concentration	µg/dscf	< 0.15	< 0.15	< 0.16	< 0.15
	Emission Rate	lbs/hr	< 2.1E-04	< 2.0E-04	< 2.0E-04	< 2.0E-04
Chlorobenzilate	Total Catch	µg	< 40 ND	< 30 ND	< 30 ND	< 33 ND
	Concentration	µg/dscf	< 0.15	< 0.15	< 0.16	< 0.15
	Emission Rate	lbs/hr	< 2.1E-04	< 2.0E-04	< 2.0E-04	< 2.0E-04
4-Chloro-3-methylphenol	Total Catch	µg	< 40 ND	< 30 ND	< 30 ND	< 33 ND
	Concentration	µg/dscf	< 0.15	< 0.15	< 0.16	< 0.15
	Emission Rate	lbs/hr	< 2.1E-04	< 2.0E-04	< 2.0E-04	< 2.0E-04
1-Chloronaphthalene	Total Catch	µg	< 40 ND	< 30 ND	< 30 ND	< 33 ND
	Concentration	µg/dscf	< 0.15	< 0.15	< 0.16	< 0.15
	Emission Rate	lbs/hr	< 2.1E-04	< 2.0E-04	< 2.0E-04	< 2.0E-04

TABLE 2-9. (Continued) SEMIVOLATILE ORGANICS EMISSIONS SUMMARY
Deactivation Furnace System Agent Trial Burn

Parameter		Units	Run 1	Run 3	Run 4	Average
2-Chloronaphthalene	Total Catch	µg	< 40 ND	< 30 ND	< 30 ND	< 33 ND
	Concentration	µg/dscf	< 0.15	< 0.15	< 0.16	< 0.15
	Emission Rate	lbs/hr	< 2.1E-04	< 2.0E-04	< 2.0E-04	< 2.0E-04
2-Chlorophenol	Total Catch	µg	< 40 ND	< 30 ND	< 30 ND	< 33 ND
	Concentration	µg/dscf	< 0.15	< 0.15	< 0.16	< 0.15
	Emission Rate	lbs/hr	< 2.1E-04	< 2.0E-04	< 2.0E-04	< 2.0E-04
4-Chlorophenyl phenyl ether	Total Catch	µg	< 40 ND	< 30 ND	< 30 ND	< 33 ND
	Concentration	µg/dscf	< 0.15	< 0.15	< 0.16	< 0.15
	Emission Rate	lbs/hr	< 2.1E-04	< 2.0E-04	< 2.0E-04	< 2.0E-04
Chrysene	Total Catch	µg	< 40 ND	< 30 ND	< 30 ND	< 33 ND
	Concentration	µg/dscf	< 0.15	< 0.15	< 0.16	< 0.15
	Emission Rate	lbs/hr	< 2.1E-04	< 2.0E-04	< 2.0E-04	< 2.0E-04
4,4'-DDE	Total Catch	µg	< 400 ND	< 300 ND	< 300 ND	< 333 ND
	Concentration	µg/dscf	< 1.47	< 1.50	< 1.57	< 1.51
	Emission Rate	lbs/hr	< 2.1E-03	< 2.0E-03	< 2.0E-03	< 2.0E-03
Diallate	Total Catch	µg	< 80 ND	< 60 ND	< 60 ND	< 67 ND
	Concentration	µg/dscf	< 0.29	< 0.30	< 0.31	< 0.30
	Emission Rate	lbs/hr	< 4.1E-04	< 3.9E-04	< 3.9E-04	< 4.0E-04
Dibenz(a,h)anthracene	Total Catch	µg	< 40 ND	< 30 ND	< 30 ND	< 33 ND
	Concentration	µg/dscf	< 0.15	< 0.15	< 0.16	< 0.15
	Emission Rate	lbs/hr	< 2.1E-04	< 2.0E-04	< 2.0E-04	< 2.0E-04
Dibenz(a,j)acridine	Total Catch	µg	< 40 ND	< 30 ND	< 30 ND	< 33 ND
	Concentration	µg/dscf	< 0.15	< 0.15	< 0.16	< 0.15
	Emission Rate	lbs/hr	< 2.1E-04	< 2.0E-04	< 2.0E-04	< 2.0E-04
Dibenzofuran	Total Catch	µg	< 40 ND	< 30 ND	< 30 ND	< 33 ND
	Concentration	µg/dscf	< 0.15	< 0.15	< 0.16	< 0.15
	Emission Rate	lbs/hr	< 2.1E-04	< 2.0E-04	< 2.0E-04	< 2.0E-04
DBCP (1,2-Dibromo-3-chloropropane)	Total Catch	µg	< 400 ND	< 300 ND	< 300 ND	< 333 ND
	Concentration	µg/dscf	< 1.47	< 1.50	< 1.57	< 1.51
	Emission Rate	lbs/hr	< 2.1E-03	< 2.0E-03	< 2.0E-03	< 2.0E-03
Di-n-butyl phthalate	Total Catch	µg	< 40 ND	< 30 ND	< 31	< 34 ND
	Concentration	µg/dscf	< 0.15	< 0.15	< 0.16	< 0.15
	Emission Rate	lbs/hr	< 2.1E-04	< 2.0E-04	< 2.0E-04	< 2.0E-04
1,2-Dichlorobenzene	Total Catch	µg	< 40 ND	< 30 ND	< 30 ND	< 33 ND
	Concentration	µg/dscf	< 0.15	< 0.15	< 0.16	< 0.15
	Emission Rate	lbs/hr	< 2.1E-04	< 2.0E-04	< 2.0E-04	< 2.0E-04
1,3-Dichlorobenzene	Total Catch	µg	< 40 ND	< 30 ND	< 30 ND	< 33 ND
	Concentration	µg/dscf	< 0.15	< 0.15	< 0.16	< 0.15
	Emission Rate	lbs/hr	< 2.1E-04	< 2.0E-04	< 2.0E-04	< 2.0E-04
1,4-Dichlorobenzene	Total Catch	µg	< 40 ND	< 30 ND	< 30 ND	< 33 ND
	Concentration	µg/dscf	< 0.15	< 0.15	< 0.16	< 0.15
	Emission Rate	lbs/hr	< 2.1E-04	< 2.0E-04	< 2.0E-04	< 2.0E-04
3,3'-Dichlorobenzidine	Total Catch	µg	< 80 ND	< 60 ND	< 60 ND	< 67 ND
	Concentration	µg/dscf	< 0.29	< 0.30	< 0.31	< 0.30
	Emission Rate	lbs/hr	< 4.1E-04	< 3.9E-04	< 3.9E-04	< 4.0E-04
2,4-Dichlorophenol	Total Catch	µg	< 40 ND	< 30 ND	< 30 ND	< 33 ND
	Concentration	µg/dscf	< 0.15	< 0.15	< 0.16	< 0.15
	Emission Rate	lbs/hr	< 2.1E-04	< 2.0E-04	< 2.0E-04	< 2.0E-04
2,6-Dichlorophenol	Total Catch	µg	< 40 ND	< 30 ND	< 30 ND	< 33 ND
	Concentration	µg/dscf	< 0.15	< 0.15	< 0.16	< 0.15
	Emission Rate	lbs/hr	< 2.1E-04	< 2.0E-04	< 2.0E-04	< 2.0E-04
Dihydrosafrole	Total Catch	µg	< 400 ND	< 300 ND	< 300 ND	< 333 ND
	Concentration	µg/dscf	< 1.47	< 1.50	< 1.57	< 1.51
	Emission Rate	lbs/hr	< 2.1E-03	< 2.0E-03	< 2.0E-03	< 2.0E-03

TABLE 2-9. (Continued) SEMIVOLATILE ORGANICS EMISSIONS SUMMARY
Deactivation Furnace System Agent Trial Burn

Parameter		Units	Run 1	Run 3	Run 4	Average
Diethyl phthalate	Total Catch	µg	< 40 ND	< 30 ND	< 30 ND	< 33 ND
	Concentration	µg/dscf	< 0.15	< 0.15	< 0.16	< 0.15
	Emission Rate	lbs/hr	< 2.1E-04	< 2.0E-04	< 2.0E-04	< 2.0E-04
p-Dimethylaminoazobenzene	Total Catch	µg	< 40 ND	< 30 ND	< 30 ND	< 33 ND
	Concentration	µg/dscf	< 0.15	< 0.15	< 0.16	< 0.15
	Emission Rate	lbs/hr	< 2.1E-04	< 2.0E-04	< 2.0E-04	< 2.0E-04
7,12-Dimethylbenz(a)-anthracene	Total Catch	µg	< 40 ND	< 30 ND	< 30 ND	< 33 ND
	Concentration	µg/dscf	< 0.15	< 0.15	< 0.16	< 0.15
	Emission Rate	lbs/hr	< 2.1E-04	< 2.0E-04	< 2.0E-04	< 2.0E-04
3,3'-Dimethylbenzidine	Total Catch	µg	< 40 ND	< 30 ND	< 30 ND	< 33 ND
	Concentration	µg/dscf	< 0.15	< 0.15	< 0.16	< 0.15
	Emission Rate	lbs/hr	< 2.1E-04	< 2.0E-04	< 2.0E-04	< 2.0E-04
a,a-Dimethylphenethyl-amine	Total Catch	µg	< 40 ND	< 30 ND	< 30 ND	< 33 ND
	Concentration	µg/dscf	< 0.15	< 0.15	< 0.16	< 0.15
	Emission Rate	lbs/hr	< 2.1E-04	< 2.0E-04	< 2.0E-04	< 2.0E-04
2,4-Dimethylphenol	Total Catch	µg	< 40 ND	< 30 ND	< 30 ND	< 33 ND
	Concentration	µg/dscf	< 0.15	< 0.15	< 0.16	< 0.15
	Emission Rate	lbs/hr	< 2.1E-04	< 2.0E-04	< 2.0E-04	< 2.0E-04
Dimethyl phthalate	Total Catch	µg	< 40 ND	< 192	< 30 ND	< 87 ND
	Concentration	µg/dscf	< 0.15	< 0.96	< 0.16	< 0.42
	Emission Rate	lbs/hr	< 2.1E-04	< 1.2E-03	< 2.0E-04	< 5.5E-04
1,3-Dinitrobenzene	Total Catch	µg	< 40 ND	< 30 ND	< 30 ND	< 33 ND
	Concentration	µg/dscf	< 0.15	< 0.15	< 0.16	< 0.15
	Emission Rate	lbs/hr	< 2.1E-04	< 2.0E-04	< 2.0E-04	< 2.0E-04
4,6-Dinitro-2-methylphenol	Total Catch	µg	< 200 ND	< 150 ND	< 150 ND	< 167 ND
	Concentration	µg/dscf	< 0.73	< 0.75	< 0.78	< 0.76
	Emission Rate	lbs/hr	< 1.0E-03	< 9.8E-04	< 9.8E-04	< 1.0E-03
2,4-Dinitrophenol	Total Catch	µg	< 200 ND	< 150 ND	< 150 ND	< 167 ND
	Concentration	µg/dscf	< 0.73	< 0.75	< 0.78	< 0.76
	Emission Rate	lbs/hr	< 1.0E-03	< 9.8E-04	< 9.8E-04	< 1.0E-03
2,4-Dinitrotoluene	Total Catch	µg	< 40 ND	< 30 ND	< 30 ND	< 33 ND
	Concentration	µg/dscf	< 0.15	< 0.15	< 0.16	< 0.15
	Emission Rate	lbs/hr	< 2.1E-04	< 2.0E-04	< 2.0E-04	< 2.0E-04
2,6-Dinitrotoluene	Total Catch	µg	< 40 ND	< 30 ND	< 30 ND	< 33 ND
	Concentration	µg/dscf	< 0.15	< 0.15	< 0.16	< 0.15
	Emission Rate	lbs/hr	< 2.1E-04	< 2.0E-04	< 2.0E-04	< 2.0E-04
Dioxathion	Total Catch	µg	< 0 ND	< 0 ND	< 0 ND	< 0 ND
	Concentration	µg/dscf	< 0.00	< 0.00	< 0.00	< 0.00
	Emission Rate	lbs/hr	< 0.0E+00	< 0.0E+00	< 0.0E+00	< 0.0E+00
Di-n-octyl phthalate	Total Catch	µg	< 40 ND	< 30 ND	< 30 ND	< 33 ND
	Concentration	µg/dscf	< 0.15	< 0.15	< 0.16	< 0.15
	Emission Rate	lbs/hr	< 2.1E-04	< 2.0E-04	< 2.0E-04	< 2.0E-04
1,2-Diphenylhydrazine	Total Catch	µg	< 40 ND	< 30 ND	< 30 ND	< 33 ND
	Concentration	µg/dscf	< 0.15	< 0.15	< 0.16	< 0.15
	Emission Rate	lbs/hr	< 2.1E-04	< 2.0E-04	< 2.0E-04	< 2.0E-04
Diphenylamine	Total Catch	µg	< 40 ND	< 30 ND	< 30 ND	< 33 ND
	Concentration	µg/dscf	< 0.15	< 0.15	< 0.16	< 0.15
	Emission Rate	lbs/hr	< 2.1E-04	< 2.0E-04	< 2.0E-04	< 2.0E-04
bis(2-Ethylhexyl)-phthalate	Total Catch	µg	< 322	< 470	< 1041	< 611 ND
	Concentration	µg/dscf	< 1.18	< 2.35	< 5.44	< 2.99
	Emission Rate	lbs/hr	< 1.7E-03	< 3.1E-03	< 6.8E-03	< 3.9E-03
Ethyl methanesulfonate	Total Catch	µg	< 40 ND	< 30 ND	< 30 ND	< 33 ND
	Concentration	µg/dscf	< 0.15	< 0.15	< 0.16	< 0.15
	Emission Rate	lbs/hr	< 2.1E-04	< 2.0E-04	< 2.0E-04	< 2.0E-04

TABLE 2-9. (Continued) SEMIVOLATILE ORGANICS EMISSIONS SUMMARY
Deactivation Furnace System Agent Trial Burn

Parameter		Units	Run 1	Run 3	Run 4	Average
Ethyl parathion	Total Catch	µg	< 400 ND	< 300 ND	< 300 ND	< 333 ND
	Concentration	µg/dscf	< 1.47	< 1.50	< 1.57	< 1.51
	Emission Rate	lbs/hr	< 2.1E-03	< 2.0E-03	< 2.0E-03	< 2.0E-03
Fluoranthene	Total Catch	µg	< 40 ND	< 30 ND	< 30 ND	< 33 ND
	Concentration	µg/dscf	< 0.15	< 0.15	< 0.16	< 0.15
	Emission Rate	lbs/hr	< 2.1E-04	< 2.0E-04	< 2.0E-04	< 2.0E-04
Fluorene	Total Catch	µg	< 40 ND	< 30 ND	< 30 ND	< 33 ND
	Concentration	µg/dscf	< 0.15	< 0.15	< 0.16	< 0.15
	Emission Rate	lbs/hr	< 2.1E-04	< 2.0E-04	< 2.0E-04	< 2.0E-04
Heptachlor	Total Catch	µg	< 400 ND	< 300 ND	< 300 ND	< 333 ND
	Concentration	µg/dscf	< 1.47	< 1.50	< 1.57	< 1.51
	Emission Rate	lbs/hr	< 2.1E-03	< 2.0E-03	< 2.0E-03	< 2.0E-03
Hexachlorobenzene	Total Catch	µg	< 40 ND	< 30 ND	< 30 ND	< 33 ND
	Concentration	µg/dscf	< 0.15	< 0.15	< 0.16	< 0.15
	Emission Rate	lbs/hr	< 2.1E-04	< 2.0E-04	< 2.0E-04	< 2.0E-04
Hexachlorobutadiene	Total Catch	µg	< 40 ND	< 30 ND	< 30 ND	< 33 ND
	Concentration	µg/dscf	< 0.15	< 0.15	< 0.16	< 0.15
	Emission Rate	lbs/hr	< 2.1E-04	< 2.0E-04	< 2.0E-04	< 2.0E-04
Hexachlorocyclopentadiene	Total Catch	µg	< 40 ND	< 30 ND	< 30 ND	< 33 ND
	Concentration	µg/dscf	< 0.15	< 0.15	< 0.16	< 0.15
	Emission Rate	lbs/hr	< 2.1E-04	< 2.0E-04	< 2.0E-04	< 2.0E-04
Hexachloroethane	Total Catch	µg	< 40 ND	< 30 ND	< 30 ND	< 33 ND
	Concentration	µg/dscf	< 0.15	< 0.15	< 0.16	< 0.15
	Emission Rate	lbs/hr	< 2.1E-04	< 2.0E-04	< 2.0E-04	< 2.0E-04
Hexachlorophene	Total Catch	µg	< 400 ND	< 300 ND	< 300 ND	< 333 ND
	Concentration	µg/dscf	< 1.47	< 1.50	< 1.57	< 1.51
	Emission Rate	lbs/hr	< 2.1E-03	< 2.0E-03	< 2.0E-03	< 2.0E-03
Hexachloropropene	Total Catch	µg	< 40 ND	< 30 ND	< 30 ND	< 33 ND
	Concentration	µg/dscf	< 0.15	< 0.15	< 0.16	< 0.15
	Emission Rate	lbs/hr	< 2.1E-04	< 2.0E-04	< 2.0E-04	< 2.0E-04
Indeno(1,2,3-cd)pyrene	Total Catch	µg	< 40 ND	< 30 ND	< 30 ND	< 33 ND
	Concentration	µg/dscf	< 0.15	< 0.15	< 0.16	< 0.15
	Emission Rate	lbs/hr	< 2.1E-04	< 2.0E-04	< 2.0E-04	< 2.0E-04
Isophorone	Total Catch	µg	< 40 ND	< 30 ND	< 30 ND	< 33 ND
	Concentration	µg/dscf	< 0.15	< 0.15	< 0.16	< 0.15
	Emission Rate	lbs/hr	< 2.1E-04	< 2.0E-04	< 2.0E-04	< 2.0E-04
Isosafrole	Total Catch	µg	< 80 ND	< 60 ND	< 60 ND	< 67 ND
	Concentration	µg/dscf	< 0.29	< 0.30	< 0.31	< 0.30
	Emission Rate	lbs/hr	< 4.1E-04	< 3.9E-04	< 3.9E-04	< 4.0E-04
Methapyrilene	Total Catch	µg	< 40 ND	< 30 ND	< 30 ND	< 33 ND
	Concentration	µg/dscf	< 0.15	< 0.15	< 0.16	< 0.15
	Emission Rate	lbs/hr	< 2.1E-04	< 2.0E-04	< 2.0E-04	< 2.0E-04
Methoxychlor	Total Catch	µg	< 400 ND	< 300 ND	< 300 ND	< 333 ND
	Concentration	µg/dscf	< 1.47	< 1.50	< 1.57	< 1.51
	Emission Rate	lbs/hr	< 2.1E-03	< 2.0E-03	< 2.0E-03	< 2.0E-03
3-Methylcholanthrene	Total Catch	µg	< 40 ND	< 30 ND	< 30 ND	< 33 ND
	Concentration	µg/dscf	< 0.15	< 0.15	< 0.16	< 0.15
	Emission Rate	lbs/hr	< 2.1E-04	< 2.0E-04	< 2.0E-04	< 2.0E-04
Methyl methanesulfonate	Total Catch	µg	< 40 ND	< 30 ND	< 30 ND	< 33 ND
	Concentration	µg/dscf	< 0.15	< 0.15	< 0.16	< 0.15
	Emission Rate	lbs/hr	< 2.1E-04	< 2.0E-04	< 2.0E-04	< 2.0E-04
2-Methylnapthalene	Total Catch	µg	< 40 ND	< 30 ND	< 30 ND	< 33 ND
	Concentration	µg/dscf	< 0.15	< 0.15	< 0.16	< 0.15
	Emission Rate	lbs/hr	< 2.1E-04	< 2.0E-04	< 2.0E-04	< 2.0E-04

TABLE 2-9. (Continued) SEMIVOLATILE ORGANICS EMISSIONS SUMMARY
Deactivation Furnace System Agent Trial Burn

Parameter		Units	Run 1	Run 3	Run 4	Average
2-Methyl-5-nitroaniline	Total Catch	µg	< 400 ND	< 300 ND	< 300 ND	< 333 ND
	Concentration	µg/dscf	< 1.47	< 1.50	< 1.57	< 1.51
	Emission Rate	lbs/hr	< 2.07E-03	< 1.95E-03	< 1.97E-03	< 2.00E-03
2-Methylphenol	Total Catch	µg	< 40 ND	< 30 ND	< 30 ND	< 33 ND
	Concentration	µg/dscf	< 0.15	< 0.15	< 0.16	< 0.15
	Emission Rate	lbs/hr	< 2.1E-04	< 2.0E-04	< 2.0E-04	< 2.0E-04
3/4-Methylphenol	Total Catch	µg	< 40 ND	< 30 ND	< 30 ND	< 33 ND
	Concentration	µg/dscf	< 0.15	< 0.15	< 0.16	< 0.15
	Emission Rate	lbs/hr	< 2.1E-04	< 2.0E-04	< 2.0E-04	< 2.0E-04
Naphthalene	Total Catch	µg	< 40 ND	< 30 ND	< 30 ND	< 33 ND
	Concentration	µg/dscf	< 0.15	< 0.15	< 0.16	< 0.15
	Emission Rate	lbs/hr	< 2.1E-04	< 2.0E-04	< 2.0E-04	< 2.0E-04
1,4-Naphthoquinone	Total Catch	µg	< 40 ND	< 30 ND	< 30 ND	< 33 ND
	Concentration	µg/dscf	< 0.15	< 0.15	< 0.16	< 0.15
	Emission Rate	lbs/hr	< 2.1E-04	< 2.0E-04	< 2.0E-04	< 2.0E-04
1-Napthylamine	Total Catch	µg	< 40 ND	< 30 ND	< 30 ND	< 33 ND
	Concentration	µg/dscf	< 0.15	< 0.15	< 0.16	< 0.15
	Emission Rate	lbs/hr	< 2.1E-04	< 2.0E-04	< 2.0E-04	< 2.0E-04
2-Napthylamine	Total Catch	µg	< 40 ND	< 30 ND	< 30 ND	< 33 ND
	Concentration	µg/dscf	< 0.15	< 0.15	< 0.16	< 0.15
	Emission Rate	lbs/hr	< 2.1E-04	< 2.0E-04	< 2.0E-04	< 2.0E-04
5-Nitroacenaphthene	Total Catch	µg	< 400 ND	< 300 ND	< 300 ND	< 333 ND
	Concentration	µg/dscf	< 1.47	< 1.50	< 1.57	< 1.51
	Emission Rate	lbs/hr	< 2.1E-03	< 2.0E-03	< 2.0E-03	< 2.0E-03
2-Nitroaniline	Total Catch	µg	< 200 ND	< 150 ND	< 150 ND	< 167 ND
	Concentration	µg/dscf	< 0.73	< 0.75	< 0.78	< 0.76
	Emission Rate	lbs/hr	< 1.0E-03	< 9.8E-04	< 9.8E-04	< 1.0E-03
3-Nitroaniline	Total Catch	µg	< 200 ND	< 150 ND	< 150 ND	< 167 ND
	Concentration	µg/dscf	< 0.73	< 0.75	< 0.78	< 0.76
	Emission Rate	lbs/hr	< 1.0E-03	< 9.8E-04	< 9.8E-04	< 1.0E-03
4-Nitroaniline	Total Catch	µg	< 200 ND	< 150 ND	< 150 ND	< 167 ND
	Concentration	µg/dscf	< 0.73	< 0.75	< 0.78	< 0.76
	Emission Rate	lbs/hr	< 1.0E-03	< 9.8E-04	< 9.8E-04	< 1.0E-03
Nitrobenzene	Total Catch	µg	< 40 ND	< 30 ND	< 30 ND	< 33 ND
	Concentration	µg/dscf	< 0.15	< 0.15	< 0.16	< 0.15
	Emission Rate	lbs/hr	< 2.1E-04	< 2.0E-04	< 2.0E-04	< 2.0E-04
2-Nitrophenol	Total Catch	µg	< 40 ND	< 30 ND	< 30 ND	< 33 ND
	Concentration	µg/dscf	< 0.15	< 0.15	< 0.16	< 0.15
	Emission Rate	lbs/hr	< 2.1E-04	< 2.0E-04	< 2.0E-04	< 2.0E-04
4-Nitrophenol	Total Catch	µg	< 200 ND	< 150 ND	< 150 ND	< 167 ND
	Concentration	µg/dscf	< 0.73	< 0.75	< 0.78	< 0.76
	Emission Rate	lbs/hr	< 1.0E-03	< 9.8E-04	< 9.8E-04	< 1.0E-03
4-Nitroquinoline-1-oxide	Total Catch	µg	< 40 ND	< 30 ND	< 30 ND	< 33 ND
	Concentration	µg/dscf	< 0.15	< 0.15	< 0.16	< 0.15
	Emission Rate	lbs/hr	< 2.1E-04	< 2.0E-04	< 2.0E-04	< 2.0E-04
N-Nitroso-di-n-butylamine	Total Catch	µg	< 40 ND	< 30 ND	< 30 ND	< 33 ND
	Concentration	µg/dscf	< 0.15	< 0.15	< 0.16	< 0.15
	Emission Rate	lbs/hr	< 2.1E-04	< 2.0E-04	< 2.0E-04	< 2.0E-04
N-Nitrosodiethylamine	Total Catch	µg	< 40 ND	< 30 ND	< 30 ND	< 33 ND
	Concentration	µg/dscf	< 0.15	< 0.15	< 0.16	< 0.15
	Emission Rate	lbs/hr	< 2.1E-04	< 2.0E-04	< 2.0E-04	< 2.0E-04
N-Nitrosodimethylamine	Total Catch	µg	< 40 ND	< 30 ND	< 30 ND	< 33 ND
	Concentration	µg/dscf	< 0.15	< 0.15	< 0.16	< 0.15
	Emission Rate	lbs/hr	< 2.1E-04	< 2.0E-04	< 2.0E-04	< 2.0E-04

TABLE 2-9. (Continued) SEMIVOLATILE ORGANICS EMISSIONS SUMMARY
Deactivation Furnace System Agent Trial Burn

Parameter		Units	Run 1	Run 3	Run 4	Average
N-Nitrosodiphenylamine	Total Catch	µg	< 40 ND	< 30 ND	< 30 ND	< 33 ND
	Concentration	µg/dscf	< 0.15	< 0.15	< 0.16	< 0.15
	Emission Rate	lbs/hr	< 2.1E-04	< 2.0E-04	< 2.0E-04	< 2.0E-04
N-Nitroso-di-n-propylamine	Total Catch	µg	< 40 ND	< 30 ND	< 30 ND	< 33 ND
	Concentration	µg/dscf	< 0.15	< 0.15	< 0.16	< 0.15
	Emission Rate	lbs/hr	< 2.1E-04	< 2.0E-04	< 2.0E-04	< 2.0E-04
N-Nitrosomethylethylamine	Total Catch	µg	< 40 ND	< 30 ND	< 30 ND	< 33 ND
	Concentration	µg/dscf	< 0.15	< 0.15	< 0.16	< 0.15
	Emission Rate	lbs/hr	< 2.1E-04	< 2.0E-04	< 2.0E-04	< 2.0E-04
N-Nitrosomorpholine	Total Catch	µg	< 40 ND	< 30 ND	< 30 ND	< 33 ND
	Concentration	µg/dscf	< 0.15	< 0.15	< 0.16	< 0.15
	Emission Rate	lbs/hr	< 2.1E-04	< 2.0E-04	< 2.0E-04	< 2.0E-04
N-Nitrosopiperidine	Total Catch	µg	< 40 ND	< 30 ND	< 30 ND	< 33 ND
	Concentration	µg/dscf	< 0.15	< 0.15	< 0.16	< 0.15
	Emission Rate	lbs/hr	< 2.1E-04	< 2.0E-04	< 2.0E-04	< 2.0E-04
N-Nitrosopyrrolidine	Total Catch	µg	< 40 ND	< 30 ND	< 30 ND	< 33 ND
	Concentration	µg/dscf	< 0.15	< 0.15	< 0.16	< 0.15
	Emission Rate	lbs/hr	< 2.1E-04	< 2.0E-04	< 2.0E-04	< 2.0E-04
5-Nitro-o-toluidine	Total Catch	µg	< 40 ND	< 30 ND	< 30 ND	< 33 ND
	Concentration	µg/dscf	< 0.15	< 0.15	< 0.16	< 0.15
	Emission Rate	lbs/hr	< 2.1E-04	< 2.0E-04	< 2.0E-04	< 2.0E-04
Pentachlorobenzene	Total Catch	µg	< 40 ND	< 30 ND	< 30 ND	< 33 ND
	Concentration	µg/dscf	< 0.15	< 0.15	< 0.16	< 0.15
	Emission Rate	lbs/hr	< 2.1E-04	< 2.0E-04	< 2.0E-04	< 2.0E-04
Pentachloroethane	Total Catch	µg	< 40 ND	< 30 ND	< 30 ND	< 33 ND
	Concentration	µg/dscf	< 0.15	< 0.15	< 0.16	< 0.15
	Emission Rate	lbs/hr	< 2.1E-04	< 2.0E-04	< 2.0E-04	< 2.0E-04
Pentachloronitrobenzene (PCNB)	Total Catch	µg	< 200 ND	< 150 ND	< 150 ND	< 170 ND
	Concentration	µg/dscf	< 0.73	< 0.75	< 0.78	< 0.76
	Emission Rate	lbs/hr	< 1.0E-03	< 9.8E-04	< 9.8E-04	< 1.0E-03
Pentachlorophenol	Total Catch	µg	< 200 ND	< 150 ND	< 150 ND	< 170 ND
	Concentration	µg/dscf	< 0.73	< 0.75	< 0.78	< 0.76
	Emission Rate	lbs/hr	< 1.0E-03	< 9.8E-04	< 9.8E-04	< 1.0E-03
Phenacetin	Total Catch	µg	< 40 ND	< 30 ND	< 30 ND	< 33 ND
	Concentration	µg/dscf	< 0.15	< 0.15	< 0.16	< 0.15
	Emission Rate	lbs/hr	< 2.1E-04	< 2.0E-04	< 2.0E-04	< 2.0E-04
Phenanthrene	Total Catch	µg	< 40 ND	< 30 ND	< 30 ND	< 33 ND
	Concentration	µg/dscf	< 0.15	< 0.15	< 0.16	< 0.15
	Emission Rate	lbs/hr	< 2.1E-04	< 2.0E-04	< 2.0E-04	< 2.0E-04
Phenol	Total Catch	µg	< 47	< 30 ND	< 30 ND	< 36 ND
	Concentration	µg/dscf	< 0.17	< 0.15	< 0.16	< 0.16
	Emission Rate	lbs/hr	< 2.4E-04	< 2.0E-04	< 2.0E-04	< 2.1E-04
p-Phenylenediamine	Total Catch	µg	< 40 ND	< 30 ND	< 30 ND	< 33 ND
	Concentration	µg/dscf	< 0.15	< 0.15	< 0.16	< 0.15
	Emission Rate	lbs/hr	< 2.1E-04	< 2.0E-04	< 2.0E-04	< 2.0E-04
2-Picoline	Total Catch	µg	< 40 ND	< 30 ND	< 30 ND	< 33 ND
	Concentration	µg/dscf	< 0.15	< 0.15	< 0.16	< 0.15
	Emission Rate	lbs/hr	< 2.1E-04	< 2.0E-04	< 2.0E-04	< 2.0E-04
Pronamide	Total Catch	µg	< 40 ND	< 30 ND	< 30 ND	< 33 ND
	Concentration	µg/dscf	< 0.15	< 0.15	< 0.16	< 0.15
	Emission Rate	lbs/hr	< 2.1E-04	< 2.0E-04	< 2.0E-04	< 2.0E-04
Pyrene	Total Catch	µg	< 40 ND	< 30 ND	< 30 ND	< 33 ND
	Concentration	µg/dscf	< 0.15	< 0.15	< 0.16	< 0.15
	Emission Rate	lbs/hr	< 2.1E-04	< 2.0E-04	< 2.0E-04	< 2.0E-04

TABLE 2-9. (Continued) SEMIVOLATILE ORGANICS EMISSIONS SUMMARY
Deactivation Furnace System Agent Trial Burn

Parameter		Units	Run 1	Run 3	Run 4	Average
Quinoline	Total Catch	µg	< 400 ND	< 300 ND	< 300 ND	< 333 ND
	Concentration	µg/dscf	< 1.47	< 1.50	< 1.57	< 1.51
	Emission Rate	lbs/hr	< 2.1E-03	< 2.0E-03	< 2.0E-03	< 2.0E-03
Pyridine	Total Catch	µg	< 80 ND	< 60 ND	< 60 ND	< 67 ND
	Concentration	µg/dscf	< 0.29	< 0.30	< 0.31	< 0.30
	Emission Rate	lbs/hr	< 4.1E-04	< 3.9E-04	< 3.9E-04	< 4.0E-04
Safrole	Total Catch	µg	< 40 ND	< 30 ND	< 30 ND	< 33 ND
	Concentration	µg/dscf	< 0.15	< 0.15	< 0.16	< 0.15
	Emission Rate	lbs/hr	< 2.1E-04	< 2.0E-04	< 2.0E-04	< 2.0E-04
1,2,4,5-Tetrachloro-benzene	Total Catch	µg	< 40 ND	< 30 ND	< 30 ND	< 33 ND
	Concentration	µg/dscf	< 0.15	< 0.15	< 0.16	< 0.15
	Emission Rate	lbs/hr	< 2.1E-04	< 2.0E-04	< 2.0E-04	< 2.0E-04
2,3,4,6-Tetrachlorophenol	Total Catch	µg	< 200 ND	< 150 ND	< 150 ND	< 170 ND
	Concentration	µg/dscf	< 0.73	< 0.75	< 0.78	< 0.76
	Emission Rate	lbs/hr	< 1.0E-03	< 9.8E-04	< 9.8E-04	< 1.0E-03
p-Toluidine	Total Catch	µg	< 40 ND	< 30 ND	< 30 ND	< 33 ND
	Concentration	µg/dscf	< 0.15	< 0.15	< 0.16	< 0.15
	Emission Rate	lbs/hr	< 2.1E-04	< 2.0E-04	< 2.0E-04	< 2.0E-04
2-Toluidine	Total Catch	µg	< 40 ND	< 30 ND	< 30 ND	< 33 ND
	Concentration	µg/dscf	< 0.15	< 0.15	< 0.16	< 0.15
	Emission Rate	lbs/hr	< 2.1E-04	< 2.0E-04	< 2.0E-04	< 2.0E-04
Tributylamine	Total Catch	µg	< 400 ND	< 300 ND	< 300 ND	< 333 ND
	Concentration	µg/dscf	< 1.47	< 1.50	< 1.57	< 1.51
	Emission Rate	lbs/hr	< 2.1E-03	< 2.0E-03	< 2.0E-03	< 2.0E-03
1,2,4-Trichlorobenzene	Total Catch	µg	< 40 ND	< 30 ND	< 30 ND	< 33 ND
	Concentration	µg/dscf	< 0.15	< 0.15	< 0.16	< 0.15
	Emission Rate	lbs/hr	< 2.1E-04	< 2.0E-04	< 2.0E-04	< 2.0E-04
2,4,5-Trichlorophenol	Total Catch	µg	< 40 ND	< 30 ND	< 30 ND	< 33 ND
	Concentration	µg/dscf	< 0.15	< 0.15	< 0.16	< 0.15
	Emission Rate	lbs/hr	< 2.1E-04	< 2.0E-04	< 2.0E-04	< 2.0E-04
2,4,6-Trichlorophenol	Total Catch	µg	< 40 ND	< 30 ND	< 30 ND	< 33 ND
	Concentration	µg/dscf	< 0.15	< 0.15	< 0.16	< 0.15
	Emission Rate	lbs/hr	< 2.1E-04	< 2.0E-04	< 2.0E-04	< 2.0E-04
0,0,0-Triethylphosphorothioate	Total Catch	µg	< 400 ND	< 300 ND	< 300 ND	< 330 ND
	Concentration	µg/dscf	< 1.47	< 1.50	< 1.57	< 1.51
	Emission Rate	lbs/hr	< 2.1E-03	< 2.0E-03	< 2.0E-03	< 2.0E-03
1,3,5-Trinitrobenzene	Total Catch	µg	< 40 ND	< 30 ND	< 30 ND	< 33 ND
	Concentration	µg/dscf	< 0.15	< 0.15	< 0.16	< 0.15
	Emission Rate	lbs/hr	< 2.1E-04	< 2.0E-04	< 2.0E-04	< 2.0E-04
Cyclohexane, 1,2-dichloro-, trans-	Total Catch	µg	5.0	8.0	6.4	6.5
(TIC)	Concentration	µg/dscf	0.02	0.04	0.03	0.03
	Emission Rate	lbs/hr	2.6E-05	5.2E-05	4.2E-05	4.0E-05
Hexadecanoic Acid	Total Catch	µg	49	62	69	60
(TIC)	Concentration	µg/dscf	0.18	0.31	0.36	0.28
	Emission Rate	lbs/hr	2.5E-04	4.0E-04	4.5E-04	3.7E-04
4-Hydroxy-methyl-2-pentanone	Total Catch	µg	35	0	0	35
(TIC)	Concentration	µg/dscf	0.13	0.00	0.00	0.04
	Emission Rate	lbs/hr	1.8E-04	0.0E+00	0.0E+00	6.0E-05
Ethylbenzene	Total Catch	µg	0	6.4	5.3	5.9
(TIC)	Concentration	µg/dscf	0.00	0.03	0.03	0.02
	Emission Rate	lbs/hr	0.0E+00	4.2E-05	3.5E-05	2.5E-05

TABLE 2-9. (Continued) SEMIVOLATILE ORGANICS EMISSIONS SUMMARY
Deactivation Furnace System Agent Trial Burn

Parameter		Units	Run 1	Run 3	Run 4	Average
Amyl Acetate	Total Catch	µg	0	6.3	0.0	6.3
(TIC)	Concentration	µg/dscf	0.00	0.03	0.00	0.01
	Emission Rate	lbs/hr	0.0E+00	4.1E-05	0.0E+00	1.4E-05
Tetradecanoic Acid	Total Catch	µg	0	5.4	0.0	5.4
(TIC)	Concentration	µg/dscf	0.00	0.03	0.00	0.01
	Emission Rate	lbs/hr	0.0E+00	3.5E-05	0.0E+00	1.2E-05
Pentadecanoic Acid	Total Catch	µg	0	4.7	0.0	4.7
(TIC)	Concentration	µg/dscf	0.00	0.02	0.00	0.01
	Emission Rate	lbs/hr	0.0E+00	3.1E-05	0.0E+00	1.0E-05
9-Hexadecanoic Acid	Total Catch	µg	0	8.1	6.6	7.4
(TIC)	Concentration	µg/dscf	0.00	0.04	0.03	0.02
	Emission Rate	lbs/hr	0.0E+00	5.3E-05	4.3E-05	3.2E-05
Oleic Acid	Total Catch	µg	0	8.9	8.0	8.5
(TIC)	Concentration	µg/dscf	0.00	0.04	0.04	0.03
	Emission Rate	lbs/hr	0.0E+00	5.8E-05	5.2E-05	3.7E-05
Octadecanoic Acid	Total Catch	µg	0	16	20	18
(TIC)	Concentration	µg/dscf	0.00	0.08	0.10	0.06
	Emission Rate	lbs/hr	0.0E+00	1.1E-04	1.3E-04	7.8E-05
Octadecanamide	Total Catch	µg	0	11	4.7	7.9
(TIC)	Concentration	µg/dscf	0.00	0.06	0.02	0.03
	Emission Rate	lbs/hr	0.0E+00	7.2E-05	3.1E-05	3.4E-05
1,3,5,7-Cyclooctatetraene	Total Catch	µg	0	29	0	29
(TIC)	Concentration	µg/dscf	0.00	0.15	0.00	0.05
	Emission Rate	lbs/hr	0.0E+00	1.9E-04	0.0E+00	6.3E-05
Heptane, 3-ethyl-5-methyl-	Total Catch	µg	0.0	12	0.0	12
(TIC)	Concentration	µg/dscf	0.00	0.06	0.00	0.02
	Emission Rate	lbs/hr	0.0E+00	7.8E-05	0.0E+00	2.6E-05
n-Decane	Total Catch	µg	0.0	29	0.0	29
(TIC)	Concentration	µg/dscf	0.00	0.15	0.00	0.05
	Emission Rate	lbs/hr	0.0E+00	1.9E-04	0.0E+00	6.3E-05
Benzaldehyde, ethyl-	Total Catch	µg	0.0	13	10	11
(TIC)	Concentration	µg/dscf	0.00	0.07	0.05	0.04
	Emission Rate	lbs/hr	0.0E+00	8.5E-05	6.4E-05	4.9E-05
Hexanedioic Acid, mono (2-ethylhexyl) ester	Total Catch	µg	0.0	12	11	12
(TIC)	Concentration	µg/dscf	0.00	0.06	0.06	0.04
	Emission Rate	lbs/hr	0.0E+00	7.8E-05	7.2E-05	5.0E-05
Pentatriacontane	Total Catch	µg	0.0	29	0.0	29
(TIC)	Concentration	µg/dscf	0.00	0.15	0.00	0.05
	Emission Rate	lbs/hr	0.0E+00	1.9E-04	0.0E+00	6.3E-05
Pentanedioic Acid, dimethyl ester	Total Catch	µg	0.0	5.6	0.0	5.6
(TIC)	Concentration	µg/dscf	0.00	0.03	0.00	0.01
	Emission Rate	lbs/hr	0.0E+00	3.6E-05	0.0E+00	1.2E-05
2-Ethyl-1-hexanol	Total Catch	µg	0.0	0.0	12	12
(TIC)	Concentration	µg/dscf	0.00	0.00	0.06	0.02
	Emission Rate	lbs/hr	0.0E+00	0.0E+00	7.9E-05	2.6E-05
Propanoic Acid, 2-methyl, 2,2-dimethyl-1-(2-hydroxy)	Total Catch	µg	0.0	0.0	11	11
(TIC)	Concentration	µg/dscf	0.00	0.00	0.06	0.02
	Emission Rate	lbs/hr	0.0E+00	0.0E+00	7.2E-05	2.4E-05
Propanoic Acid, 2-methyl, 3-hydroxy-2,4,4-trimethyl	Total Catch	µg	0.0	0.0	13	13
(TIC)	Concentration	µg/dscf	0.00	0.00	0.07	0.02
	Emission Rate	lbs/hr	0.0E+00	0.0E+00	8.5E-05	2.8E-05
2,6-bis(1,1-Dimethylethyl)-4-methylphenol	Total Catch	µg	0.0	0.0	7.8	7.8
(TIC)	Concentration	µg/dscf	0.00	0.00	0.04	0.01
	Emission Rate	lbs/hr	0.0E+00	0.0E+00	5.1E-05	1.7E-05

No blank corrections have been made to these data. If undetected in the analysis, the PQL is reported, with the exception of TICs which are reported as "0".
An "ND" indicates the compound was neither detected in any of the three train components for each trial burn run, nor in the average of the three runs
An "<" indicates that the compound was not detected in at least one of the train components. This does not apply to the reporting of TICs
Note that only TICs detected in multiple runs are averaged. If detected in only a single run, that value is reported in the "Average" column

3), bis (2-ethylhexyl)-phthalate (Runs 1, 3, 4), phenol (Run 1), and twenty-two (22) tentatively-identified compounds (TICs). The field blank sample also contained (2-ethylhexyl)-phthalate and 22 (TICs).

Of the TICs, two were detected in all three performance runs. These were trans-1,2-dichlorocyclohexane and hexadecanoic acid. Only one other TIC, 4-hydroxy-methyl-2-pentanone, was detected in Run 1. All other TICs were detected in either Run 3 or 4, or both.

2.5.6 Semi-Volatile TOC Emissions

Three six-hour samples were collected at the DFS duct sampling location (Ports G and H) using an EPA Method 0010 sampling train specifically for the determination of SVTOCs. Table 2-10 presents the results for these performance runs and the field blank. The samples were analyzed by GC/FID for Total Chromatographic Organics (TCO) as directed in "Guidance for Total Organics". TCO or SVTOC are expressed as the C_8 through C_{17} group. The field blank was higher than the Run 1 sample and represented about 50 % of the material found in the other two runs. The three-run average of TCO emission rates was 5.6×10^{-3} lbs/hr at an average concentration of 4.1 μg/dscf.

The samples were also analyzed gravimetrically for non-volatile TOC. The field blank sample was higher than any of the exhaust gas samples. The three-run average of non-volatile TOC emission rates was 0.046 lbs/hr at an average concentration of 34 μg/dscf. Based on the results of the field blank, these concentrations and emission rates should be considered as non-detect values.

2.5.7 PCDD/PCDF Emissions

Three six-hour samples were collected at the DFS duct sampling location (Ports N3 and N4) using a SW-846, Method 0023A sampling train for the determination of PCDDs/PCDFs. Individual congeners and total homologues are reported in Table 2-11. Results from the field blank are also shown in Table 2-11. The sampling train yields two samples which are analyzed individually. No PCDD or PCDF congeners were detected in any of the front half samples, and only 2,3,7,8-TCDF, Total TCDF, and Total TCDD were detected in the back half rinse and XAD trap. The congener exhibiting the highest toxicity, 2,3,7,8-TCDD, was not confirmed in any of the samples. Analysis of the field blank sample found 2,3,7,8-TCDF and Total TCDF at concentrations similar to the exhaust gas samples.

The toxic equivalent (TEQ) concentrations presented for these samples are calculated using the toxic equivalency factor (TEF) used by the EPA in correlating PCDD/PCDF data with the relative toxicity of each homologous series. The listed TEFs are the EPA's 1989 interim values. For additional information on the concept and applicability of TEFs to PCDD/PCDF emissions, we direct the reader to the *1989 Update to the Interim Procedures for Estimating Risks Associated with Exposures to Mixtures of Chlorinated Dibenzo-p-dioxins and Dibenzofurans (PCDDs and PCDFs)*, Risk Assessment Forum, U.S. EPA, March 1989.

TABLE 2-10. SEMI-VOLATILE/NON-VOLATILE TOC EMISSIONS SUMMARY
Deactivation Furnace System Agent Trial Burn

Parameter		Units	Run 1	Run 3	Run 4	Average	Field Blank
Sampling Location			DFS Duct	DFS Duct	DFS Duct		
Date			7-Jan-97	10-Jan-97	11-Jan-97		8-Jan-97
Start Time			0833	0850	0832		
Stop Time			1557	1651	1623		
Net Sampling Time		minutes	360	360	360	360	
Sample Volume		dscf	272.259	206.586	194.901	224.582	
Stack Gas Flow Rate		dscf/hr	650,000	620,000	590,000	620,000	
Total Chromatographic Organics C8 through C17							
	Total Catch	µg	500	1,300	820	873	600
	Concentration	µg/dscf	1.8	6.3	4.2	4.1	
	Emission Rate	lbs/hr	2.6E-03	8.6E-03	5.5E-03	5.6E-03	
Non-Volatile Organics							
	Total Catch	mg	7.4	8.2	6.8	7.5	9.4
	Concentration	ug/dscf	27	40	35	34	
	Emission Rate	lbs/hr	0.039	0.054	0.045	0.046	

TABLE 2-11. DIOXIN/FURAN EMISSION SUMMARY

		Run 1	Run 3	Run 4	Field Blank
Date		07-Jan-97	10-Jan-97	11-Jan-97	08-Jan-97
Test Start		837	850	833	1000
Test End		1600	1702	1602	1700
Dioxin Emissions:					
Waste Feed Rate, rockets/hr		33	36	35.9	
TEQ Emission Rate, g/sec.		2.02E-12	2.48E-12	2.29E-12	
Method 0023A					
Stack Flow Rate, acfm		33,556	32,452	31,394	
Stack Flow Rate, dscfm		10,921	10,375	10,008	
Stack Flow Rate, dscm/min		309	294	283	
Moisture, % Vol.		48.4	48.6	48.5	
% Isokinetic		97	98	98	
Total Sample Time, min		360	360	360	
Total Sample Volume, dscf		270.49	202.35	196.25	
Total Sample Volume, dscm		7.66	5.73	5.56	
PCDD	**TEF**	PCDD Concentration, pg			
Total TCDD, pg	0	20	< 4.6	12	< 2.5
2,3,7,8-TCDD, pg	1	< 4.6	< 2.0	< 4.6	< 2.5
Total PeCDDs, pg	0	< 12.0	< 9.5	< 12.0	< 9.7
1,2,3,7,8-PeCDD, pg	0.5	< 9.6	< 9.5	< 9.6	< 4.2
Total HxCDDs, pg	0	< 5.0	< 2.1	< 5.0	< 2.3
1,2,3,4,7,8-HxCDD, pg	0.1	< 1.7	< 2.0	< 1.7	< 1.9
1,2,3,6,7,8-HxCDD, pg	0.1	< 1.6	< 2.0	< 1.6	< 1.8
1,2,3,7,8,9-HxCDD, pg	0.1	< 1.7	< 2.1	< 1.7	< 1.9
Total HpCDDs, pg	0	< 3.9	< 4.8	< 3.9	< 3.0
1,2,3,4,6,7,8-HpCDD, pg	0.01	< 3.9	< 4.8	< 3.9	< 3.0
OCDD, pg	0.001	< 21	< 17	< 21.0	< 12
Total PCDDs, pg		< 61.9	< 38.0	< 53.9	< 29.5
PCDF	**TEF**	PCDF Concentration, pg			
Total TCDF, pg	0	72	53	61	130
2,3,7,8-TCDF, pg	0.1	30	29	27	35
Total PeCDFs, pg	0	< 16	< 5.4	< 14	< 8.7
1,2,3,7,8-PeCDF, pg	0.05	< 6.2	< 5.4	< 6.9	< 6.0
2,3,4,7,8-PeCDF, pg	0.5	< 5.7	< 4.9	< 4.7	< 5.4
Total HxCDFs, pg	0	< 4.2	< 3.7	< 3.3	< 1.6
1,2,3,4,7,8-HxCDF, pg	0.1	< 4.2	< 2.0	< 3.3	< 1.2
1,2,3,6,7,8-HxCDF, pg	0.1	< 3.0	< 2.9	< 1.3	< 1.3
2,3,4,6,7,8-HxCDF, pg	0.1	< 3.2	< 3.1	< 1.4	< 1.4
1,2,3,7,8,9-HxCDF, pg	0.1	< 3.8	< 3.7	< 1.7	< 1.6
Total HpCDFs, pg	0	< 2.9	< 2.9	< 5.5	< 1.6
1,2,3,4,6,7,8-HpCDF, pg	0.01	< 2.9	< 2.9	< 4.6	< 1.6
1,2,3,4,7,8,9-HpCDF, pg	0.01	< 0.8	< 1.2	< 5.5	< 1.0
OCDF, pg	0.001	< 5.0	< 4.7	< 5.8	< 7.3
Total PCDFs, pg		< 100	< 70	< 90	< 149
Toxic Equivalent Conc. TCDD, pg		3.0	2.9	2.7	3.5

TABLE 2-11. (Continued) DIOXIN/FURAN EMISSION SUMMARY

	Run 1	Run 3	Run 4	HRA Emission Rate
Date	07-Jan-97	10-Jan-97	11-Jan-97	
Test Start	837	850	833	
Test End	1600	1702	1602	
EMISSION RATE, grams/second				
Total TCDD	1.35E-11	3.93E-12	1.02E-11	5.27E-11
Total PeCDDs	<8.1E-12	<8.1E-12	<1.0E-11	2.63E-10
Total HxCDDs	<3.4E-12	<1.8E-12	<4.2E-12	7.19E-10
Total HpCDDs	<2.6E-12	<4.1E-12	<3.3E-12	5.63E-10
OCDD	<1.4E-11	<1.5E-11	<1.8E-11	1.20E-09
Total TCDF	4.84E-11	4.53E-11	5.18E-11	5.27E-11
Total PeCDFs	<1.1E-11	<4.6E-12	<1.2E-11	5.39E-10
Total HxCDFs	<2.8E-12	<3.2E-12	<2.8E-12	1.10E-09
Total HpCDFs	<2.0E-12	<2.5E-12	<4.7E-12	6.35E-10
OCDF	<3.4E-12	<4.0E-12	<4.9E-12	5.27E-10
Total PCDD/PCDF, g/sec.	<1.1E-10	<9.2E-11	<1.2E-10	5.65E-09
TEQ Emission Rate, g/sec.	2.02E-12	2.48E-12	2.29E-12	
Oxygen Conc., Vol. %	9.93	9.90	10.0	
TEQ Conc. ng/dscm @ 7 % O_2	0.00050	0.00064	0.00062	

2.5.8 PCB Emissions

Shipping and firing tubes for the M55 rockets contain PCBs. Emissions of these PCBs in the exhaust gas were monitored. Three six-hour samples were collected at the DFS duct sampling location (Ports N3 and N4) using 40 CFR 266, Appendix IX, Section 3.4, Method 23 sampling train for the determination of PCBs. Individual coplanar congeners, as well as total homologues, are reported in Table 2-12. The sampling train fractions were combined into one sample for analysis. Archived portions of the dioxin trains were also analyzed for PCBs. All six results are shown in Table 2-12. Emission levels of PCBs were below the emission rates used in the HRA for all samples analyzed for PCBs. Analysis of the field blank found total PCBs at 22 ng which is in the same range as some of the field samples.

2.5.9 Energetic Emissions

Three two-hour samples were collected at the DFS duct sampling location (Ports I and J) using a USACHPPM sampling train for energetic materials (STEM). The train was used for the determination of RDX, nitroglycerin (NG), and 2,4,6-trinitrotoluene (TNT). Table 2-13 presents the results of the testing. A total of 22 individual samples are generated from each train. Eighteen of these samples were used to calculate the emission concentration. The other four samples are QC checks on the recovery of the sample train. Development of the various samples is shown in Figures 4-1 to 4-4. The resulting reduced data are presented for each energetic material by individual train component in the data table and then summed.

2.5.10 Metals Emissions

Three two-hour samples were collected at the DFS duct sampling location (Ports I and J) using 40 CFR 266, Appendix IX, Section 3.1 (Multiple Metals). Table 2-14 presents the results for this ATB. The sampling train yields two samples, the front half and back half, which are analyzed individually. The results were combined and presented in Table 2-14. The elements detected in all three runs were Al, Sb, Ba, Cd, Cr, Co, Cu, Pb, Mn, Hg, Ni, P, Sn, and Zn. Arsenic was detected in Runs 1 and 4, but not Run 3. Boron was detected in only Run 4. Beryllium, Se, Ag, Tl, and V were not detected in any of the runs. Emission rates are compared to the emission rates used for the HRA in Table 1-1. The emission rates for cadmium, lead, and phosphorus were above the HRA emission rates. The other elements were below the HRA emission rates with some of the rates as much as 100 times less.

TABLE 2-12. DFS ATB PCB EMISSION SUMMARY

	Run 1 PCBs	Run 1 Dioxins	Run 3 PCBs	Run 3 Dioxins	Run 4 PCBs	Run 4 Dioxins
Date	07-Jan-97	07-Jan-97	10-Jan-97	10-Jan-97	11-Jan-97	11-Jan-97
Test Start	838	837	850	850	832	833
Test End	1600	1600	1651	1702	1623	1602
PCB Emissions:						
Waste Feed Rate, rockets/hr	33.0	33.0	36.0	36.0	35.9	35.9
PCB Conc., ug/dscm.	< 0.0037	< 0.0070	< 0.0638	< 0.0081	< 0.0338	< 0.0099
PCB Emission Rate, g/sec.	1.90E-08	3.59E-08	3.15E-07	3.97E-08	1.59E-07	4.68E-08
HRA Emission Rate, g/sec	5.39E-07	5.39E-07	5.39E-07	5.39E-07	5.39E-07	5.39E-07
Sampling Data						
Stack Flow Rate, acfm	33,186	33,556	32,797	32,452	31,567	31,394
Stack Flow Rate, dscfm	10,718	10,921	10,449	10,375	9,929	10,008
Stack Flow Rate, dscm/min	303	309	296	294	281	283
Moisture, % Vol.	48.8	48.4	49.1	48.6	49.1	48.5
% Isokinetic	98	97	99	98	99	98
Total Sample Time, min	360	360	360	360	360	360
Total Sample Volume, dscf	270.47	270.49	210.24	202.35	199.59	196.25
Total Sample Volume, dscm	7.66	7.66	5.95	5.73	5.65	5.56
PCB Concentration, ng						
Total Chlorobiphenyl	1.4	1.0	< 1	< 1	3.8	< 1
Total Dichlorobiphenyl	7.4	8.7	3.5	6.5	19	7.4
Total Trichlorobiphenyl	12	19	9.2	18	54	16
Total Tetrachlorobiphenyl	1.9	16	360	15	77	19
3,3',4,4'-Tetrachlorobiphenyl	< 1	< 1	< 1	< 1	< 1	< 1
3,4,4',5-Tetrachlorobiphenyl	< 1	< 1	< 1	< 1	< 1	< 1
Total Pentachlorobiphenyl	< 1	2.3	< 1	< 1	28	4.6
2,3',4,4',5-Pentachlorobiphenyl	< 1	< 1	< 1	< 1	1.9	< 1
2,3,3',4,4'-Pentachlorobiphenyl	< 1	< 1	< 1	< 1	< 1	< 1
2,3,4,4',5-Pentachlorobiphenyl	< 1	< 1	< 1	< 1	< 1	< 1
3,3',4,4',5-Pentachlorobiphenyl	< 1	< 1	< 1	< 1	< 1	< 1
Total Hexachlorobiphenyl	< 1	2.4	< 1	< 1	5.5	3.1
2,3,3',4,4',5-Hexachlorobiphenyl	< 1	< 1	< 1	< 1	< 1	< 1
2,3,3',4,4',5'-Hexachlorobiphenyl	< 1	< 1	< 1	< 1	< 1	< 1
2,3',4,4',5,5'-Hexachlorobiphenyl	< 1	< 1	< 1	< 1	< 1	< 1
3,3',4,4',5,5'-Hexachlorobiphenyl	< 1	< 1	< 1	< 1	< 1	< 1
Total Heptachlorobiphenyl	< 1	< 1	< 1	< 1	< 1	< 1
2,3,3',4,4',5,5'-Heptachlorobiphenyl	< 1	< 1	< 1	< 1	< 1	< 1
Total Octachlorobiphenyl	< 1	< 1	< 1	< 1	< 1	< 1
Total Nonachlorobiphenyl	< 1	< 1	< 1	< 1	< 1	< 1
Decachlorobiphenyl	< 1	< 1	< 1	< 1	< 1	< 1
Total PCBs, ng	< 28.7	< 53.4	< 379.7	< 46.5	< 191.3	< 55.1

TABLE 2-13. ENERGETIC MATERIALS EMISSIONS SUMMARY
Deactivation Furnace System Agent Trial Burn - Run 1

Run:	1	Energetic Materials		
Date:	7-Jan-97	RDX µg	Nitroglycerin µg	2,4,6-Trinitrotoluene µg
Start Time	0850			
Stop Time	1303			
Sampling Volume, dscf	84.202			
Stack Gas Flow Rate, dscf/hr	670,000			
Stack Gas Temperature	236			
Mass Collected, µg per Component				
Probe Catch/Rinse		< 0.54	< 0.54	< 0.54
Impinger Extracts		< 0.33	16.7	< 0.70
XAD Extracts (Total)		< 2.0	< 1.06	< 2.1
Tube Rinse		< 0.088	< 0.088	< 0.088
Total Mass, µg		< 3.0	< 18	< 3.4
Concentration, µg/dscf		< 0.035	< 0.218	< 0.041
Emission Rate, lbs/hr		< 5.2E-05	< 3.2E-04	< 6.0E-05

(a) Acetone rinses are not included in the sum total of compounds as per the USACHPPM (USAEHA) method.

TABLE 2-13 (Cont). ENERGETIC MATERIALS EMISSIONS SUMMARY
Deactivation Furnace System Agent Trial Burn - Run 3

Run:	3	Energetic Materials		
Date:	10-Jan-97	RDX µg	Nitroglycerin µg	2,4,6-Trinitrotoluene µg
Start Time	0840			
Stop Time	1201			
Sampling Volume, dscf	70.773			
Stack Gas Flow Rate, dscf/hr	610,000			
Stack Gas Temperature	239			
Mass Collected, µg per Component				
Probe Catch/Rinse		< 0.44	< 0.44	< 0.44
Impinger Extracts		< 0.34	18.5	< 0.34
XAD Extracts (Total)		< 2.0	< 2.0	< 2.7
Tube Rinse		< 0.093	< 0.093	< 0.093
Total Mass, µg		< 2.9	< 21	< 3.6
Concentration, µg/dscf		< 0.041	< 0.297	< 0.050
Emission Rate, lbs/hr		< 5.5E-05	< 4.0E-04	< 6.8E-05

(a) Acetone rinses are not included in the sum total of compounds as per the USACHPPM (USAEHA) method.

TABLE 2-13 (Cont). ENERGETIC MATERIALS EMISSIONS SUMMARY
Deactivation Furnace System Agent Trial Burn - Run 4

Run:	4	Energetic Materials					
Date:	11-Jan-97	RDX µg		Nitroglycerin µg		2,4,6-Trinitrotoluene µg	
Start Time	0830						
Stop Time	1151						
Sampling Volume, dscf	68.234						
Stack Gas Flow Rate, dscf/hr	670,000						
Stack Gas Temperature	238						
Mass Collected, µg per Component							
Probe Catch/Rinse		<	0.41	<	0.41	<	0.41
Impinger Extracts		<	0.34		18.4	<	0.34
XAD Extracts (Total)		<	0.70	<	1.0	<	0.80
Tube Rinse		<	0.092	<	0.092	<	0.092
Total Mass, µg		<	1.5	<	20	<	1.6
Concentration, µg/dscf		<	0.023	<	0.292	<	0.024
Emission Rate, lbs/hr		<	3.3E-05	<	4.3E-04	<	3.6E-05

(a) Acetone rinses are not included in the sum total of compounds as per the USACHPPM (USAEHA) method.

TABLE 2-13 (Cont). ENERGETIC MATERIALS EMISSIONS SUMMARY
Deactivation Furnace System Agent Trial Burn - 3 Run Average

Runs: 1, 3, 4 Date: 7, 10, 11-Jan-97		Energetic Materials		
		RDX µg	Nitroglycerin µg	2,4,6-Trinitrotoluene µg
Start Time				
Stop Time				
Sampling Volume, dscf	74.403			
Stack Gas Flow Rate, dscf/hr	650,000			
Stack Gas Temperature	238			
Mass Collected, µg per Component				
Probe Catch/Rinse		< 0.46	< 0.46	< 0.46
Impinger Extracts		< 0.34	17.87	< 0.46
XAD Extracts (Total)		< 1.6	< 1.4	< 1.9
Tube Rinse		< 0.091	< 0.091	< 0.091
Total Mass, µg		< 2.5	< 20	< 2.9
Concentration, µg/dscf		< 0.033	< 0.266	< 0.039
Emission Rate, lbs/hr		< 4.7E-05	< 3.8E-04	< 5.5E-05

(a) Acetone rinses are not included in the sum total of compounds as per the USACHPPM (USAEHA) method.

TABLE 2-14. METALS EMISSIONS SUMMARY
Deactivation Furnace System Agent Trial Burn

Parameter		*Units*	*Run 1*	*Run 3*	*Run 4*	*Average*
Sampling Location			Outlet Duct	Outlet Duct	Outlet Duct	
Date			7-Jan-97	10-Jan-97	11-Jan-97	
Start Time			1440	1301	1250	
Stop Time			1657	1732	1602	
Net Sampling Time		minutes	120	120	120	120
Sample Volume (Metals)		dscf	71.492	65.368	64.430	67.097
Stack Gas Flow Rate (Metals)		dscf/hr	650,000	600,000	590,000	610,000
Stack Gas Temperature		deg.F	238	238	238	238
Stack Gas Moisture		%	49.2	49.3	48.4	49.0
O_2 Concentration		%	9.0	9.5	9.6	9.4
CO_2 Concentration		%	6.5	7.0	7.1	6.9
Aluminum	Total Catch	µg	99	< 37	< 87	< 74
	Concentration	µg/dscf	1.4	< 0.6	< 1.3	< 1.1
	Emission Rate	lbs/hr	2.0E-03	< 7.4E-04	< 1.8E-03	< 1.5E-03
	Emission Rate	g/s	2.5E-04	< 9.4E-05	< 2.2E-04	< 1.9E-04
Antimony	Total Catch	µg	< 4.9	< 2.2	< 7.6	< 4.9
	Concentration	µg/dscf	< 0.07	< 0.03	< 0.12	< 0.07
	Emission Rate	lbs/hr	< 9.8E-05	< 4.5E-05	< 1.5E-04	< 9.9E-05
	Emission Rate	g/s	< 1.2E-05	< 5.6E-06	< 1.9E-05	< 1.2E-05
Arsenic	Total Catch	µg	< 1.0	< 0.61 ND	< 1.0	< 0.90
	Concentration	µg/dscf	< 0.015	< 0.009	< 0.016	< 0.013
	Emission Rate	lbs/hr	< 2.1E-05	< 1.2E-05	< 2.1E-05	< 1.8E-05
	Emission Rate	g/s	< 2.6E-06	< 1.6E-06	< 2.6E-06	< 2.3E-06
Barium	Total Catch	µg	2.3	1.8	3.3	2.4
	Concentration	µg/dscf	0.03	0.03	0.05	0 04
	Emission Rate	lbs/hr	4.5E-05	3.6E-05	6.6E-05	4.9E-05
	Emission Rate	g/s	5.7E-06	4.5E-06	8.3E-06	6.2E-06
Beryllium	Total Catch	µg	< 0.30 ND	< 0.31 ND	< 0.31 ND	< 0.31 ND
	Concentration	µg/dscf	< 0.004	< 0.005	< 0.005	< 0.005
	Emission Rate	lbs/hr	< 6.0E-06	< 6.3E-06	< 6.3E-06	< 6.2E-06
	Emission Rate	g/s	< 7.6E-07	< 7.9E-07	< 7.9E-07	< 7.8E-07
Boron	Total Catch	µg	< 3.0 ND	< 3.3 ND	20	< 8.7
	Concentration	µg/dscf	< 0.04	< 0.05	0.31	< 0.13
	Emission Rate	lbs/hr	< 6.0E-05	< 6.7E-05	4.0E-04	< 1.8E-04
	Emission Rate	g/s	< 7.6E-06	< 8.4E-06	5.1E-05	< 2.2E-05
Cadmium	Total Catch	µg	< 73	< 12	< 71	< 52
	Concentration	µg/dscf	< 1.02	< 0.18	< 1.10	< 0.76
	Emission Rate	lbs/hr	< 1.5E-03	< 2.3E-04	< 1.4E-03	< 1.0E-03
	Emission Rate	g/s	< 1.8E-04	< 3.0E-05	< 1.8E-04	< 1.3E-04
Chromium	Total Catch	µg	10	< 2.1	< 9.9	< 7.5
	Concentration	µg/dscf	0.15	< 0.03	< 0.15	< 0.11
	Emission Rate	lbs/hr	2.1E-04	< 4.2E-05	< 2.0E-04	< 1.5E-04
	Emission Rate	g/s	2.6E-05	< 5.3E-06	< 2.5E-05	< 1.9E-05
Cobalt	Total Catch	µg	< 0.59	< 1.4	< 0.60	< 0.85
	Concentration	µg/dscf	< 0.008	< 0.021	< 0.01	< 0.01
	Emission Rate	lbs/hr	< 1.2E-05	< 2.8E-05	< 1.2E-05	< 1.7E-05
	Emission Rate	g/s	< 1.5E-06	< 3.5E-06	< 1.5E-06	< 2.2E-06
Copper	Total Catch	µg	5.3	< 3.1	< 6.6	< 5.0
	Concentration	µg/dscf	0.07	< 0.05	< 0.10	< 0.07
	Emission Rate	lbs/hr	1.1E-04	< 6.2E-05	< 1.3E-04	< 1.0E-04
	Emission Rate	g/s	1.3E-05	< 7.8E-06	< 1.7E-05	< 1.3E-05
Lead	Total Catch	µg	< 2645	< 415	< 2045	< 1702
	Concentration	µg/dscf	< 37	< 6.4	< 32	< 25
	Emission Rate	lbs/hr	< 5.3E-02	< 8.4E-03	< 4.1E-02	< 3.4E-02
	Emission Rate	g/s	< 6.7E-03	< 1.1E-03	< 5.2E-03	< 4.3E-03

TABLE 2-14. (Cont.) METALS EMISSIONS SUMMARY
Deactivation Furnace System Agent Trial Burn

Parameter		Units	Run 1	Run 3	Run 4	Average
Manganese	Total Catch	µg	6.2	4.9	3.9	5.0
	Concentration	µg/dscf	0.09	0.08	0.06	0.07
	Emission Rate	lbs/hr	1.2E-04	1.0E-04	7.9E-05	1.0E-04
	Emission Rate	g/s	1.6E-05	1.3E-05	9.9E-06	1.3E-05
Mercury	Total Catch	µg	< 4.0	3.8	< 3.7	< 3.8
	Concentration	µg/dscf	< 0.056	0.059	< 0.057	< 0.057
	Emission Rate	lbs/hr	< 8.0E-05	7.8E-05	< 7.4E-05	< 7.7E-05
	Emission Rate	g/s	< 1.0E-05	9.8E-06	< 9.3E-06	< 9.7E-06
Nickel	Total Catch	µg	3.2	5.6	3.4	4.1
	Concentration	µg/dscf	0.04	0.09	0.05	0.06
	Emission Rate	lbs/hr	6.4E-05	1.1E-04	6.8E-05	8.2E-05
	Emission Rate	g/s	8.1E-06	1.4E-05	8.6E-06	1.0E-05
Phosphorus	Total Catch	µg	< 961	< 111	< 571	< 547
	Concentration	µg/dscf	< 13	< 1.7	< 8.9	< 8.0
	Emission Rate	lbs/hr	< 1.9E-02	< 2.2E-03	< 1.2E-02	< 1.1E-02
	Emission Rate	g/s	< 2.4E-03	< 2.8E-04	< 1.5E-03	< 1.4E-03
Selenium	Total Catch	µg	< 0.61 ND	< 0.61 ND	< 0.61 ND	< 0.61 ND
	Concentration	µg/dscf	< 0.009	< 0.009	< 0.009	< 0.009
	Emission Rate	lbs/hr	< 1.2E-05	< 1.2E-05	< 1.2E-05	< 1.2E-05
	Emission Rate	g/s	< 1.5E-06	< 1.6E-06	< 1.6E-06	< 1.5E-06
Silver	Total Catch	µg	< 0.15 ND	< 0.15 ND	< 0.15 ND	< 0.15 ND
	Concentration	µg/dscf	< 0.002	< 0.002	< 0.002	< 0.002
	Emission Rate	lbs/hr	< 3.0E-06	< 3.1E-06	< 3.1E-06	< 3.1E-06
	Emission Rate	g/s	< 3.8E-07	< 3.9E-07	< 3.9E-07	< 3.9E-07
Thallium	Total Catch	µg	< 0.30 ND	< 0.31 ND	< 0.31 ND	< 0.31 ND
	Concentration	µg/dscf	< 0.004	< 0.005	< 0.005	< 0.005
	Emission Rate	lbs/hr	< 6.0E-06	< 6.3E-06	< 6.3E-06	< 6.2E-06
	Emission Rate	g/s	< 7.6E-07	< 7.9E-07	< 7.9E-07	< 7.8E-07
Tin	Total Catch	µg	< 2.9	< 1.4	< 1.6	< 2.0
	Concentration	µg/dscf	< 0.04	< 0.02	< 0.02	< 0.03
	Emission Rate	lbs/hr	< 5.8E-05	< 2.9E-05	< 3.3E-05	< 4.0E-05
	Emission Rate	g/s	< 7.3E-06	< 3.6E-06	< 4.1E-06	< 5.0E-06
Vanadium	Total Catch	µg	< 1.5 ND	< 1.5 ND	< 1.5 ND	< 1.5 ND
	Concentration	µg/dscf	< 0.021	< 0.023	< 0.024	< 0.023
	Emission Rate	lbs/hr	< 3.0E-05	< 3.1E-05	< 3.1E-05	< 3.1E-05
	Emission Rate	g/s	< 3.8E-06	< 3.9E-06	< 3.9E-06	< 3.9E-06
Zinc	Total Catch	µg	448	< 100	282	< 277
	Concentration	µg/dscf	6.3	< 1.5	4.4	< 4.1
	Emission Rate	lbs/hr	9.0E-03	< 2.0E-03	5.7E-03	< 5.6E-03
	Emission Rate	g/s	1.1E-03	< 2.6E-04	7.2E-04	< 7.0E-04

Blank corrections have been made to these data. If undetected in the analysis, the PQL is reported. If the blank correction falls below the PQL, the PQL is reported.
A "<" indicates that the compound was not detected in at least one of the train components.
An "ND" indicates the compound was not detected in either of the two train components for each trial burn run, nor in the average of the three runs.

2.5.11 Hexavalent Chromium Emissions

Three two-hour samples were collected at the DFS duct sampling location (Ports I and J) using the Method Cr^{+6} sampling train for the determination of Cr^{+6} emissions. Table 2-15 presents the results for these runs. As shown in the table, Cr^{+6} was not found in the exhaust gas, after blank-correction. The Practical Quantitation Limit (PQL) were used for calculating a three-run average concentration of <0.07 μg/dscf with an average emission rate of $< 1.2 \times 10^{-5}$ grams/sec.

2.5.12 Bulk Gas Constituents

Average O_2 and CO_2 concentrations were determined according to 40 CFR 60, Appendix A, Method 3. Results from these analyses are presented in each table, where applicable, for applying the O_2 correction factors to the PM and PCDD/PCDF concentration data. Further, these data were used for calculating the exhaust gas molecular weights for the sampling periods for individual sampling trains. The average O_2 concentrations for Runs 1, 3, and 4 were 9.0, 9.5, and 9.6 percent, respectively. The average CO_2 concentrations were 6.5, 7.0, and 6.9 percent, respectively. Concentrations of these two parameters were also monitored by the TOCDF CEMS. The CEMS data is summarized in Section 3.

2.5.13 Carbon Monoxide

Carbon monoxide concentrations were determined by the TOCDF CEMS. Concentrations were corrected to 7 % O_2 by the oxygen CEMS. Concentrations for Runs 1, 3, and 4 are presented in Section 3.0 (Table 3-1). The average CO concentration in the DFS outlet duct for all three runs remained well below the 100 ppm (corrected to 7% O_2) limit stipulated in the unit's RCRA permit at a concentration of 8.4 ppm corrected to 7% O_2.

2.5.14 Cyclonic Flow Checks

Earlier in this program, cyclonic flow checks were conducted in two sections of the DFS duct using 40 CFR 60, Appendix A, Method 1. Ports N1 and N2 were checked on November 13, 1996, and found to be acceptable with an average degree of rotation of 5.0°. Ports I and J were checked on December 12, 1996, and found to be acceptable with an average degree of rotation of 6.1°. Data on these cyclonic flow checks can be found in Appendix B, Annex F.

TABLE 2-15. HEXAVALENT CHROMIUM EMISSIONS SUMMARY
Deactivation Furnace System Agent Trial Burn

Parameter		Units		Run 1		Run 3		Run 4		Average
Sampling Location				Outlet Duct		Outlet Duct		Outlet Duct		
Date				7-Jan-97		10-Jan-97		11-Jan-97		
Start Time				1440		1301		1250		
Stop Time				1657		1732		1602		
Net Sampling Time		minutes		120		120		120		120
Sample Volume		dscf		70.420		63.726		56.046		63.397
Stack Gas Flow Rate		dscf/hr		700,000		610,000		560,000		620,000
Stack Gas Temperature		deg.F		240		239		239		239
Stack Gas Moisture		%		45.5		49.1		47.8		47.5
Hexavalent Chromium	Total Catch	µg	<	4.15	<	4.86	<	4.59	<	4.53
	Concentration	µg/dscf	<	0.06	<	0.08	<	0.08	<	0.07
	Emission Rate	lbs/hr	<	9.1E-05	<	1.0E-04	<	1.0E-04	<	9.8E-05
	Emission Rate	g/s	<	1.1E-05	<	1.3E-05	<	1.3E-05	<	1.2E-05

Blank corrections have been made to these data. If undetected in the analysis, the PQL is reported. If the blank correction falls below the PQL, the PQL is reported.

2.6 PROCESS STREAM RESULTS

Multiple process streams were evaluated during the DFS ATB performance runs. These influent and effluent streams were: scrubber recirculation brine (SR), process water (PW), caustic makeup NaOH (CA), and stack condensate (CD). Residual ash (HDC ash and cyclone bin residue (CB)) was generated during the operations. The process stream samples were analyzed for volatiles, semi-volatiles, PCBs, PCDD/PCDF, and metals. Results of these analyses are presented in Tables 2-16 through 2-20.

2.6.1 Volatile Organics

Samples were collected during each ATB run at the six process stream sampling locations. Table 2-16 presents the results and averages for volatile organics for each process stream during these performance runs. During Runs 1, 3, and 4, three compounds were detected in the process water. They were bromodichloromethane, dibromochloromethane, and bromoform. Chloroform was also detected during Run 1. Compounds that were not detected in a given run are included at the applicable PQL and are noted with " < ".

2.6.2 Semi-volatile Organics

Samples were collected during each ATB run at the six process stream sampling locations. Table 2-17 presents the results and averages for semi-volatile organics for each process stream during these performance runs. All the compounds listed on the table were non-detects, as well as the one tentatively-identified compound (TIC). All non-detected compounds in a given sample matrix are included at the applicable PQL and are noted with " < ".

2.6.3 PCBs

Samples were collected during each ATB run at the six process stream sampling locations. Table 2-18 presents the results for PCBs for each process stream during these performance runs. No PCBs were detected in the aqueous process samples. Totals by homologue, as well as a single coplanar congeners, were detected in the solid streams sampled during the trial burn. PCB concentrations found in the solid matrices sampled (HDC ash and CB) during Runs 1 and 4 were below the 2 ppm limit for treatment residues. Mono- and dichlorobiphenyls were detected in the HDC ash in Runs 1 and 4. The CB residue from Runs 1 and 4 yielded detected total tetra- and pentachlorobiphenyls, as well as the coplanar 2,3',4,4',5-pentachlorobiphenyl. Total hexachlorobiphenyl was also detected in the Run 1 CB sample. No PCBs were detected in the solid residue samples from Run 3. Compounds that were not detected in a given run are included at the applicable PQL and are noted with " < ".

TABLE 2-16. PROCESS STREAM VOLATILE ORGANICS SUMMARY

Deactivation Furnace System Agent Trial Burn - Run 1

Run 1 Date: 7-Jan-97	Process Stream Concentrations					
	Scrubber Recirc. (Brine) ug/L	Process Water ug/L	Caustic (NaOH) ug/L	Stack Condensate ug/L	Heated Discharge Conveyor Ash mg/L	Cyclone Residue mg/L
Dichlorodifluoromethane (Freon 12)	< 10	< 1.0	< 10	< 1.0	< 0.050	< 0.050
Chloromethane (Methyl Chloride)	< 10	< 1.0	< 10	< 1.0	< 0.050	< 0.050
Vinyl chloride	< 10	< 1.0	< 10	< 1.0	< 0.050	< 0.050
Bromomethane (Methyl Bromide)	< 10	< 1.0	< 10	< 1.0	< 0.050	< 0.050
Chloroethane (Ethyl Chloride)	< 10	< 1.0	< 10	< 1.0	< 0.050	< 0.050
Trichlorofluoromethane (Freon 11)	< 10	< 1.0	< 10	< 1.0	< 0.025	< 0.025
1,1-Dichloroethene	< 10	< 1.0	< 10	< 1.0	< 0.025	< 0.025
Methylene chloride	< 10	< 1.0	< 10	< 1.0	< 0.025	0.040
trans-1,2-Dichloroethene	< 10	< 1.0	< 10	< 1.0	< 0.025	< 0.025
1,1-Dichloroethane	< 10	< 1.0	< 10	< 1.0	< 0.025	< 0.025
2,2-Dichloropropane	< 10	< 1.0	< 10	< 1.0	< 0.025	< 0.025
cis-1,2-Dichloroethene	< 10	< 1.0	< 10	< 1.0	< 0.025	< 0.025
Chloroform	< 10	2.7	< 10	< 1.0	< 0.025	< 0.025
Bromochloromethane	< 10	< 1.0	< 10	< 1.0	< 0.025	< 0.025
1,1,1-Trichloroethane	< 10	< 1.0	< 10	< 1.0	< 0.025	< 0.025
1,1-Dichloropropene	< 10	< 1.0	< 10	< 1.0	< 0.025	< 0.025
Carbon tetrachloride	< 10	< 1.0	< 10	< 1.0	< 0.025	< 0.025
1,2-Dichloroethane	< 10	< 1.0	< 10	< 1.0	< 0.025	< 0.025
Benzene	< 10	< 1.0	< 10	< 1.0	< 0.025	< 0.025
Trichloroethene	< 10	< 1.0	< 10	< 1.0	< 0.025	< 0.025
1,2-Dichloropropane	< 10	< 1.0	< 10	< 1.0	< 0.025	< 0.025
Bromodichloromethane	< 10	4.8	< 10	< 1.0	< 0.025	< 0.025
Dibromomethane	< 10	< 1.0	< 10	< 1.0	< 0.025	< 0.025
Toluene	< 10	< 1.0	< 10	< 1.0	< 0.025	< 0.025

TABLE 2-16. (Cont.) PROCESS STREAM VOLATILE ORGANICS SUMMARY

Deactivation Furnace System Agent Trial Burn - Run 1

Run 1 Date: 7-Jan-97	Process Stream Concentrations					
	Scrubber Recirc. (Brine) ug/L	Process Water ug/L	Caustic (NaOH) ug/L	Stack Condensate ug/L	Heated Discharge Conveyor Ash mg/L	Cyclone Residue mg/L
1,1,2-Trichloroethane	< 10	< 1.0	< 10	< 1.0	< 0.025	< 0.025
1,2-Dibromoethane (EDB)	< 10	< 1.0	< 10	< 1.0	< 0.025	< 0.025
1,3-Dichloropropane	< 10	< 1.0	< 10	< 1.0	< 0.025	< 0.025
Tetrachloroethene	< 10	< 1.0	< 10	< 1.0	< 0.025	< 0.025
Dibromochloromethane	< 10	6.7	< 10	< 1.0	< 0.025	< 0.025
Chlorobenzene	< 10	< 1.0	< 10	< 1.0	< 0.025	< 0.025
1,1,1,2-Tetrachloroethane	< 10	< 1.0	< 10	< 1.0	< 0.025	< 0.025
Ethylbenzene	< 10	< 1.0	< 10	< 1.0	< 0.025	< 0.025
Xylenes (total)	< 10	< 1.0	< 10	< 1.0	< 0.025	< 0.025
Styrene	< 10	< 1.0	< 10	< 1.0	< 0.025	< 0.025
Bromoform	< 10	5.0	< 10	< 1.0	< 0.025	< 0.025
Isopropylbenzene (1-Methylethylbenzene)	< 10	< 1.0	< 10	< 1.0	< 0.025	< 0.025
1,1,2,2-Tetrachloroethane	< 10	< 1.0	< 10	< 1.0	< 0.025	< 0.025
1,2,3-Trichloropropane	< 10	< 1.0	< 10	< 1.0	< 0.025	< 0.025
n-Propyl benzene	< 10	< 1.0	< 10	< 1.0	< 0.025	< 0.025
Bromobenzene	< 10	< 1.0	< 10	< 1.0	< 0.025	< 0.025
1,3,5-Trimethylbenzene	< 10	< 1.0	< 10	< 1.0	< 0.025	< 0.025
2-Chlorotoluene	< 10	< 1.0	< 10	< 1.0	< 0.025	< 0.025
4-Chlorotoluene	< 10	< 1.0	< 10	< 1.0	< 0.025	< 0.025
tert-Butylbenzene	< 10	< 1.0	< 10	< 1.0	< 0.025	< 0.025
1,2,4-Trimethylbenzene	< 10	< 1.0	< 10	< 1.0	< 0.025	< 0.025
sec-Butylbenzene	< 10	< 1.0	< 10	< 1.0	< 0.025	< 0.025
p-Cymene	< 10	< 1.0	< 10	< 1.0	< 0.025	< 0.025
1,3-Dichlorobenzene	< 10	< 1.0	< 10	< 1.0	< 0.025	< 0.025
1,4-Dichlorobenzene	< 10	< 1.0	< 10	< 1.0	< 0.025	< 0.025
n-Butylbenzene	< 10	< 1.0	< 10	< 1.0	< 0.025	< 0.025
1,2-Dichlorobenzene	< 10	< 1.0	< 10	< 1.0	< 0.025	< 0.025

TABLE 2-16. (Cont.) PROCESS STREAM VOLATILE ORGANICS SUMMARY

Deactivation Furnace System Agent Trial Burn - Run 1

Run 1 Date: 7-Jan-97	Process Stream Concentrations					
	Scrubber Recirc. (Brine) ug/L	Process Water ug/L	Caustic (NaOH) ug/L	Stack Condensate ug/L	Heated Discharge Conveyor Ash mg/L	Cyclone Residue mg/L
1,2-Dibromo-3-chloro-propane (DBCP)	< 10	< 1.0	< 10	< 1.0	< 0.025	< 0.025
1,2,4-Trichlorobenzene	< 10	< 1.0	< 10	< 1.0	< 0.025	< 0.025
Hexachlorobutadiene	< 10	< 1.0	< 10	< 1.0	< 0.025	< 0.025
Naphthalene	< 10	< 1.0	< 10	< 1.0	< 0.025	< 0.025
1,2,3-Trichlorobenzene	< 10	< 1.0	< 10	< 1.0	< 0.025	< 0.025

TABLE 2-16 (Cont). PROCESS STREAM VOLATILE ORGANICS SUMMARY

Deactivation Furnace System Agent Trial Burn - Run 3

Run 3 Date: 10-Jan-97	Process Stream Concentrations					
	Scrubber Recirc. (Brine) ug/L	Process Water ug/L	Caustic (NaOH) ug/L	Stack Condensate ug/L	Heated Discharge Conveyor Ash mg/L	Cyclone Residue mg/L
Dichlorodifluoromethane (Freon 12)	< 10	< 1.0	< 10	< 1.0	< 0.050	< 0.050
Chloromethane (Methyl Chloride)	< 10	< 1.0	< 10	< 1.0	< 0.050	< 0.050
Vinyl chloride	< 10	< 1.0	< 10	< 1.0	< 0.050	< 0.050
Bromomethane (Methyl Bromide)	< 10	< 1.0	< 10	< 1.0	< 0.050	< 0.050
Chloroethane (Ethyl Chloride)	< 10	< 1.0	< 10	< 1.0	< 0.050	< 0.050
Trichlorofluoromethane (Freon 11)	< 10	< 1.0	< 10	< 1.0	< 0.025	< 0.025
1,1-Dichloroethene	< 10	< 1.0	< 10	< 1.0	< 0.025	< 0.025
Methylene chloride	< 10	< 1.0	< 10	< 1.0	< 0.025	0.350
trans-1,2-Dichloroethene	< 10	< 1.0	< 10	< 1.0	< 0.025	< 0.025
1,1-Dichloroethane	< 10	< 1.0	< 10	< 1.0	< 0.025	< 0.025
2,2-Dichloropropane	< 10	< 1.0	< 10	< 1.0	< 0.025	< 0.025
cis-1,2-Dichloroethene	< 10	< 1.0	< 10	< 1.0	< 0.025	< 0.025
Chloroform	< 10	< 1.0	< 10	< 1.0	< 0.025	< 0.025
Bromochloromethane	< 10	< 1.0	< 10	< 1.0	< 0.025	< 0.025
1,1,1-Trichloroethane	< 10	< 1.0	< 10	< 1.0	< 0.025	< 0.025
1,1-Dichloropropene	< 10	< 1.0	< 10	< 1.0	< 0.025	< 0.025
Carbon tetrachloride	< 10	< 1.0	< 10	< 1.0	< 0.025	< 0.025
1,2-Dichloroethane	< 10	< 1.0	< 10	< 1.0	< 0.025	< 0.025
Benzene	< 10	< 1.0	< 10	< 1.0	< 0.025	< 0.025
Trichloroethene	< 10	< 1.0	< 10	< 1.0	< 0.025	< 0.025
1,2-Dichloropropane	< 10	< 1.0	< 10	< 1.0	< 0.025	< 0.025
Bromodichloromethane	< 10	2.3	< 10	< 1.0	< 0.025	< 0.025
Dibromomethane	< 10	< 1.0	< 10	< 1.0	< 0.025	< 0.025
Toluene	< 10	< 1.0	< 10	< 1.0	< 0.025	< 0.025

TABLE 2-16 (Cont). PROCESS STREAM VOLATILE ORGANICS SUMMARY

Deactivation Furnace System Agent Trial Burn - Run 3

Run 3 Date: 10-Jan-97	Process Stream Concentrations					
	Scrubber Recirc. (Brine) ug/L	Process Water ug/L	Caustic (NaOH) ug/L	Stack Condensate ug/L	Heated Discharge Conveyor Ash mg/L	Cyclone Residue mg/L
1,1,2-Trichloroethane	< 10	< 1.0	< 10	< 1.0	< 0.025	< 0.025
1,2-Dibromoethane (EDB)	< 10	< 1.0	< 10	< 1.0	< 0.025	< 0.025
1,3-Dichloropropane	< 10	< 1.0	< 10	< 1.0	< 0.025	< 0.025
Tetrachloroethene	< 10	< 1.0	< 10	< 1.0	< 0.025	< 0.025
Dibromochloromethane	< 10	.5.3	< 10	< 1.0	< 0.025	< 0.025
Chlorobenzene	< 10	< 1.0	< 10	< 1.0	< 0.025	< 0.025
1,1,1,2-Tetrachloroethane	< 10	< 1.0	< 10	< 1.0	< 0.025	< 0.025
Ethylbenzene	< 10	< 1.0	< 10	< 1.0	< 0.025	< 0.025
Xylenes (total)	< 10	< 1.0	< 10	< 1.0	< 0.025	0.103
Styrene	< 10	< 1.0	< 10	< 1.0	< 0.025	< 0.025
Bromoform	< 10	5.8	< 10	< 1.0	< 0.025	< 0.025
Isopropylbenzene (1-Methylethylbenzene)	< 10	< 1.0	< 10	< 1.0	< 0.025	< 0.025
1,1,2,2-Tetrachloroethane	< 10	< 1.0	< 10	< 1.0	< 0.025	< 0.025
1,2,3-Trichloropropane	< 10	< 1.0	< 10	< 1.0	< 0.025	< 0.025
n-Propyl benzene	< 10	< 1.0	< 10	< 1.0	< 0.025	< 0.025
Bromobenzene	< 10	< 1.0	< 10	< 1.0	< 0.025	< 0.025
1,3,5-Trimethylbenzene	< 10	< 1.0	< 10	< 1.0	< 0.025	< 0.025
2-Chlorotoluene	< 10	< 1.0	< 10	< 1.0	< 0.025	< 0.025
4-Chlorotoluene	< 10	< 1.0	< 10	< 1.0	< 0.025	< 0.025
tert-Butylbenzene	< 10	< 1.0	< 10	< 1.0	< 0.025	< 0.025
1,2,4-Trimethylbenzene	< 10	< 1.0	< 10	< 1.0	< 0.025	0.029
sec-Butylbenzene	< 10	< 1.0	< 10	< 1.0	< 0.025	< 0.025
p-Cymene	< 10	< 1.0	< 10	< 1.0	< 0.025	< 0.025
1,3-Dichlorobenzene	< 10	< 1.0	< 10	< 1.0	< 0.025	< 0.025
1,4-Dichlorobenzene	< 10	< 1.0	< 10	< 1.0	< 0.025	< 0.025
n-Butylbenzene	< 10	< 1.0	< 10	< 1.0	< 0.025	< 0.025
1,2-Dichlorobenzene	< 10	< 1.0	< 10	< 1.0	< 0.025	< 0.025

TABLE 2-16 (Cont). PROCESS STREAM VOLATILE ORGANICS SUMMARY

Deactivation Furnace System Agent Trial Burn - Run 3

Run 3 Date: 10-Jan-97	Process Stream Concentrations					
	Scrubber Recirc. (Brine) ug/L	Process Water ug/L	Caustic (NaOH) ug/L	Stack Condensate ug/L	Heated Discharge Conveyor Ash mg/L	Cyclone Residue mg/L
1,2-Dibromo-3-chloro-propane (DBCP)	< 10	< 1.0	< 10	< 1.0	< 0.025	< 0.025
1,2,4-Trichlorobenzene	< 10	< 1.0	< 10	< 1.0	< 0.025	< 0.025
Hexachlorobutadiene	< 10	< 1.0	< 10	< 1.0	< 0.025	< 0.025
Naphthalene	< 10	< 1.0	< 10	< 1.0	< 0.025	< 0.025
1,2,3-Trichlorobenzene	< 10	< 1.0	< 10	< 1.0	< 0.025	< 0.025

TABLE 2-16 (Cont). PROCESS STREAM VOLATILE ORGANICS SUMMARY

Deactivation Furnace System Agent Trial Burn - Run 4

Run 4 Date: 11-Jan-97	Process Stream Concentrations					
	Scrubber Recirc. (Brine) ug/L	Process Water ug/L	Caustic (NaOH) ug/L	Stack Condensate ug/L	Heated Discharge Conveyor Ash mg/L	Cyclone Residue mg/L
Dichlorodifluoromethane (Freon 12)	< 10	< 1.0	< 10	< 1.0	< 0.050	< 0.050
Chloromethane (Methyl Chloride)	< 10	< 1.0	< 10	< 1.0	< 0.050	< 0.050
Vinyl chloride	< 10	< 1.0	< 10	< 1.0	< 0.050	< 0.050
Bromomethane (Methyl Bromide)	< 10	< 1.0	< 10	< 1.0	< 0.050	< 0.050
Chloroethane (Ethyl Chloride)	< 10	< 1.0	< 10	< 1.0	< 0.050	< 0.050
Trichlorofluoromethane (Freon 11)	< 10	< 1.0	< 10	< 1.0	< 0.025	< 0.025
1,1-Dichloroethene	< 10	< 1.0	< [illegible]	< 1.0	< 0.025	< 0.025
Methylene chloride	< 10	< 1.0	< 10	< 1.0	< 0.025	0.110
trans-1,2-Dichloroethene	< 10	< 1.0	< 10	< 1.0	< 0.025	< 0.025
1,1-Dichloroethane	< 10	< 1.0	< 10	< 1.0	< 0.025	< 0.025
2,2-Dichloropropane	< 10	< 1.0	< 10	< 1.0	< 0.025	< 0.025
cis-1,2-Dichloroethene	< 10	< 1.0	< 10	< 1.0	< 0.025	< 0.025
Chloroform	< 10	< 1.0	< 10	< 1.0	< 0.025	< 0.025
Bromochloromethane	< 10	< 1.0	< 10	< 1.0	< 0.025	< 0.025
1,1,1-Trichloroethane	< 10	< 1.0	< 10	< 1.0	< 0.025	< 0.025
1,1-Dichloropropene	< 10	< 1.0	< 10	< 1.0	< 0.025	< 0.025
Carbon tetrachloride	< 10	< 1.0	< 10	< 1.0	< 0.025	< 0.025
1,2-Dichloroethane	< 10	< 1.0	< 10	< 1.0	< 0.025	< 0.025
Benzene	< 10	< 1.0	< 10	< 1.0	< 0.025	< 0.025
Trichloroethene	< 10	< 1.0	< 10	< 1.0	< 0.025	< 0.025
1,2-Dichloropropane	< 10	< 1.0	< 10	< 1.0	< 0.025	< 0.025
Bromodichloromethane	< 10	1.9	< 10	< 1.0	< 0.025	< 0.025
Dibromomethane	< 10	< 1.0	< 10	< 1.0	< 0.025	< 0.025
Toluene	< 10	< 1.0	< 10	< 1.0	< 0.025	< 0.025

TABLE 2-16 (Cont). PROCESS STREAM VOLATILE ORGANICS SUMMARY

Deactivation Furnace System Agent Trial Burn - Run 4

Run 4 Date: 11-Jan-97	Process Stream Concentrations					
	Scrubber Recirc. (Brine) ug/L	Process Water ug/L	Caustic (NaOH) ug/L	Stack Condensate ug/L	Heated Discharge Conveyor Ash mg/L	Cyclone Residue mg/L
1,1,2-Trichloroethane	< 10	< 1.0	< 10	< 1.0	< 0.025	< 0.025
1,2-Dibromoethane (EDB)	< 10	< 1.0	< 10	< 1.0	< 0.025	< 0.025
1,3-Dichloropropane	< 10	< 1.0	< 10	< 1.0	< 0.025	< 0.025
Tetrachloroethene	< 10	< 1.0	< 10	< 1.0	< 0.025	< 0.025
Dibromochloromethane	< 10	4.3	< 10	< 1.0	< 0.025	< 0.025
Chlorobenzene	< 10	< 1.0	< 10	< 1.0	< 0.025	< 0.025
1,1,1,2-Tetrachloroethane	< 10	< 1.0	< 10	< 1.0	< 0.025	< 0.025
Ethylbenzene	< 10	< 1.0	< 10	< 1.0	< 0.025	< 0.025
Xylenes (total)	< 10	< 1.0	< 10	< 1.0	< 0.025	< 0.025
Styrene	< 10	< 1.0	< 10	< 1.0	< 0.025	< 0.025
Bromoform	< 10	4.7	< 10	< 1.0	< 0.025	< 0.025
Isopropylbenzene (1-Methylethylbenzene)	< 10	< 1.0	< 10	< 1.0	< 0.025	< 0.025
1,1,2,2-Tetrachloroethane	< 10	< 1.0	< 10	< 1.0	< 0.025	< 0.025
1,2,3-Trichloropropane	< 10	< 1.0	< 10	< 1.0	< 0.025	< 0.025
n-Propyl benzene	< 10	< 1.0	< 10	< 1.0	< 0.025	< 0.025
Bromobenzene	< 10	< 1.0	< 10	< 1.0	< 0.025	< 0.025
1,3,5-Trimethylbenzene	< 10	< 1.0	< 10	< 1.0	< 0.025	< 0.025
2-Chlorotoluene	< 10	< 1.0	< 10	< 1.0	< 0.025	< 0.025
4-Chlorotoluene	< 10	< 1.0	< 10	< 1.0	< 0.025	< 0.025
tert-Butylbenzene	< 10	< 1.0	< 10	< 1.0	< 0.025	< 0.025
1,2,4-Trimethylbenzene	< 10	< 1.0	< 10	< 1.0	< 0.025	< 0.025
sec-Butylbenzene	< 10	< 1.0	< 10	< 1.0	< 0.025	< 0.025
p-Cymene	< 10	< 1.0	< 10	< 1.0	< 0.025	< 0.025
1,3-Dichlorobenzene	< 10	< 1.0	< 10	< 1.0	< 0.025	< 0.025
1,4-Dichlorobenzene	< 10	< 1.0	< 10	< 1.0	< 0.025	< 0.025
n-Butylbenzene	< 10	< 1.0	< 10	< 1.0	< 0.025	< 0.025
1,2-Dichlorobenzene	< 10	< 1.0	< 10	< 1.0	< 0.025	< 0.025

TABLE 2-16 (Cont). PROCESS STREAM VOLATILE ORGANICS SUMMARY

Deactivation Furnace System Agent Trial Burn - Run 4

Run 4 Date: 11-Jan-97	Process Stream Concentrations					
	Scrubber Recirc. (Brine) ug/L	Process Water ug/L	Caustic (NaOH) ug/L	Stack Condensate ug/L	Heated Discharge Conveyor Ash mg/L	Cyclone Residue mg/L
1,2-Dibromo-3-chloro-propane (DBCP)	< 10	< 1.0	< 10	< 1.0	< 0.025	< 0.025
1,2,4-Trichlorobenzene	< 10	< 1.0	< 10	< 1.0	< 0.025	< 0.025
Hexachlorobutadiene	< 10	< 1.0	< 10	< 1.0	< 0.025	< 0.025
Naphthalene	< 10	< 1.0	< 10	< 1.0	< 0.025	< 0.025
1,2,3-Trichlorobenzene	< 10	< 1.0	< 10	< 1.0	< 0.025	< 0.025

TABLE 2-17. PROCESS STREAM SEMIVOLATILE ORGANICS SUMMARY

Deactivation Furnace System Agent Trial Burn - Run 1

Run 1 Date: 7-Jan-97	Process Stream Concentrations					
	Scrubber Recirc. (Brine) ug/L	Process Water ug/L	Caustic (NaOH) ug/L	Stack Condensate ug/L	Heated Discharge Conveyor Ash mg/L	Cyclone Residue mg/L
Acenaphthene	< 100	< 10	< 100	< 10	< 0.050	< 0.050
Acenapthylene	< 100	< 10	< 100	< 10	< 0.050	< 0.050
Anthracene	< 100	< 10	< 100	< 10	< 0.050	< 0.050
Benzo (a) anthracene	< 100	< 10	< 100	< 10	< 0.050	< 0.050
Benzo (b) fluoranthrene	< 100	< 10	< 100	< 10	< 0.050	< 0.050
Benzo (k) fluoranthrene	< 100	< 10	< 100	< 10	< 0.050	< 0.050
Benzo (g,h,i) perylene	< 100	< 10	< 100	< 10	< 0.050	< 0.050
Benzo (a) pyrene	< 100	< 10	< 100	< 10	< 0.050	< 0.050
Benzoic acid	< 500	< 50	< 500	< 50	< 0.25	< 0.25
Benzyl alcohol	< 100	< 10	< 100	< 10	< 0.050	< 0.050
4-Bromophenyl phenyl ether	< 100	< 10	< 100	< 10	< 0.050	< 0.050
Butyl benzyl phthalate	< 100	< 10	< 100	< 10	< 0.050	< 0.050
4-Chloroaniline	< 100	< 10	< 100	< 10	< 0.050	< 0.050
bis(2-Chloroethoxy)-methane	< 100	< 10	< 100	< 10	< 0.050	< 0.050
bis(2-Chloroethyl) ether	< 100	< 10	< 100	< 10	< 0.050	< 0.050
2,2'-Oxybis (1-chloropropane)	< 100	< 10	< 100	< 10	< 0.050	< 0.050
4-Chloro-3-methylphenol	< 100	< 10	< 100	< 10	< 0.050	< 0.050
2-Chloronaphthalene	< 100	< 10	< 100	< 10	< 0.050	< 0.050
2-Chlorophenol	< 100	< 10	< 100	< 10	< 0.050	< 0.050
4-Chlorophenyl phenyl ether	< 100	< 10	< 100	< 10	< 0.050	< 0.050
Chrysene	< 100	< 10	< 100	< 10	< 0.050	< 0.050
Dibenz(a,h)anthracene	< 100	< 10	< 100	< 10	< 0.050	< 0.050
Dibenzofuran	< 100	< 10	< 100	< 10	< 0.050	< 0.050

TABLE 2-17. (Cont.) PROCESS STREAM SEMIVOLATILE ORGANICS SUMMARY

Deactivation Furnace System Agent Trial Burn - Run 1

Run 1 Date: 7-Jan-97	Process Stream Concentrations					
	Scrubber Recirc. (Brine) ug/L	Process Water ug/L	Caustic (NaOH) ug/L	Stack Condensate ug/L	Heated Discharge Conveyor Ash mg/L	Cyclone Residue mg/L
Di-n-butyl phthalate	< 100	< 10	< 100	< 10	< 0.050	< 0.050
1,2-Dichlorobenzene	< 100	< 10	< 100	< 10	< 0.050	< 0.050
1,3-Dichlorobenzene	< 100	< 10	< 100	< 10	< 0.050	< 0.050
1,4-Dichlorobenzene	< 100	< 10	< 100	< 10	< 0.050	< 0.050
3,3'-Dichlorobenzidine	< 200	< 20	< 200	< 20	< 0.10	< 0.10
2,4-Dichlorophenol	< 100	< 10	< 100	< 10	< 0.050	< 0.050
Diethyl phthalate	< 100	< 10	< 100	< 10	< 0.050	< 0.050
2,4-Dimethylphenol	< 100	< 10	< 100	< 10	< 0.050	< 0.050
Dimethyl phthalate	< 100	< 10	< 100	< 10	< 0.050	< 0.050
4,6-Dinitro-2-methylphenol	< 500	< 50	< 500	< 50	< 0.25	< 0.25
2,4-Dinitrophenol	< 500	< 50	< 500	< 50	< 0.25	< 0.25
2,4-Dinitrotoluene	< 100	< 10	< 100	< 10	< 0.050	< 0.050
2,6-Dinitrotoluene	< 100	< 10	< 100	< 10	< 0.050	< 0.050
Di-n-octyl phthalate	< 100	< 10	< 100	< 10	< 0.050	< 0.050
bis(2-Ethylhexyl)-phthalate	< 100	< 10	< 100	< 10	< 0.25	< 0.25
Fluoranthene	< 100	< 10	< 100	< 10	< 0.050	< 0.050
Fluorene	< 100	< 10	< 100	< 10	< 0.050	< 0.050
Hexachlorobenzene	< 100	< 10	< 100	< 10	< 0.050	< 0.050
Hexachlorobutadiene	< 100	< 10	< 100	< 10	< 0.050	< 0.050
Hexachlorocyclopentadiene	< 100	< 10	< 100	< 10	< 0.050	< 0.050
Hexachloroethane	< 100	< 10	< 100	< 10	< 0.050	< 0.050
Indeno(1,2,3-cd)pyrene	< 100	< 10	< 100	< 10	< 0.050	< 0.050
Isophorone	< 100	< 10	< 100	< 10	< 0.050	< 0.050
2-Methylnapthalene	< 100	< 10	< 100	< 10	< 0.050	< 0.050
2-Methylphenol	< 100	< 10	< 100	< 10	< 0.050	< 0.050
4-Methylphenol	< 100	< 10	< 100	< 10	< 0.050	< 0.050

TABLE 2-17. (Cont.) PROCESS STREAM SEMIVOLATILE ORGANICS SUMMARY

Deactivation Furnace System Agent Trial Burn - Run 1

Run 1 Date: 7-Jan-97	Process Stream Concentrations					
	Scrubber Recirc. (Brine) ug/L	Process Water ug/L	Caustic (NaOH) ug/L	Stack Condensate ug/L	Heated Discharge Conveyor Ash mg/L	Cyclone Residue mg/L
Naphthalene	< 100	< 10	< 100	< 10	< 0.050	< 0.050
2-Nitroaniline	< 500	< 50	< 500	< 50	< 0.25	< 0.25
3-Nitroaniline	< 500	< 50	< 500	< 50	< 0.25	< 0.25
4-Nitroaniline	< 500	< 50	< 500	< 50	< 0.25	< 0.25
Nitrobenzene	< 100	< 10	< 100	< 10	< 0.050	< 0.050
2-Nitrophenol	< 100	< 10	< 100	< 10	< 0.050	< 0.050
4-Nitrophenol	< 500	< 50	< 500	< 50	< 0.25	< 0.25
N-Nitrosodiphenylamine	< 100	< 10	< 100	< 10	< 0.050	< 0.050
N-Nitroso-di-n-propylamine	< 100	< 10	< 100	< 10	< 0.050	< 0.050
Pentachlorophenol	< 500	< 50	< 500	< 50	< 0.25	< 0.25
Phenanthrene	< 100	< 10	< 100	< 10	< 0.050	< 0.050
Phenol	< 100	< 10	< 100	< 10	< 0.050	< 0.050
Pyrene	< 100	< 10	< 100	< 10	< 0.050	< 0.050
1,2,4-Trichlorobenzene	< 100	< 10	< 100	< 10	< 0.050	< 0.050
2,4,5-Trichlorophenol	< 100	< 10	< 100	< 10	< 0.050	< 0.050
2,4,6-Trichlorophenol	< 100	< 10	< 100	< 10	< 0.050	< 0.050
Decamethylcyclopentasiloxane (TIC)	-	-	-	-	-	-

TABLE 2-17. (Cont.) PROCESS STREAM SEMIVOLATILE ORGANICS SUMMARY

Deactivation Furnace System Agent Trial Burn - Run 3

Run 3 Date: 10-Jan-97	Process Stream Concentrations					
	Scrubber Recirc. (Brine) ug/L	Process Water ug/L	Caustic (NaOH) ug/L	Stack Condensate ug/L	Heated Discharge Conveyor Ash mg/L	Cyclone Residue mg/L
Acenaphthene	< 1000	< 10	< 100	< 10	< 0.050	< 0.050
Acenapthylene	< 1000	< 10	< 100	< 10	< 0.050	< 0.050
Anthracene	< 1000	< 10	< 100	< 10	< 0.050	< 0.050
Benzo (a) anthracene	< 1000	< 10	< 100	< 10	< 0.050	< 0.050
Benzo (b) fluoranthrene	< 1000	< 10	< 100	< 10	< 0.050	< 0.050
Benzo (k) fluoranthrene	< 1000	< 10	< 100	< 10	< 0.050	< 0.050
Benzo (g,h,i) perylene	< 1000	< 10	< 100	< 10	< 0.050	< 0.050
Benzo (a) pyrene	< 1000	< 10	< 100	< 10	< 0.050	< 0.050
Benzoic acid	< 5000	< 50	< 500	< 50	< 0.25	< 0.25
Benzyl alcohol	< 1000	< 10	< 100	< 10	< 0.050	< 0.050
4-Bromophenyl phenyl ether	< 1000	< 10	< 100	< 10	< 0.050	< 0.050
Butyl benzyl phthalate	< 1000	< 10	< 100	< 10	< 0.050	< 0.050
4-Chloroaniline	< 1000	< 10	< 100	< 10	< 0.050	< 0.050
bis(2-Chloroethoxy)-methane	< 1000	< 10	< 100	< 10	< 0.050	< 0.050
bis(2-Chloroethyl) ether	< 1000	< 10	< 100	< 10	< 0.050	< 0.050
2,2'-Oxybis (1-chloropropane)	< 1000	< 10	< 100	< 10	< 0.050	< 0.050
4-Chloro-3-methylphenol	< 1000	< 10	< 100	< 10	< 0.050	< 0.050
2-Chloronaphthalene	< 1000	< 10	< 100	< 10	< 0.050	< 0.050
2-Chlorophenol	< 1000	< 10	< 100	< 10	< 0.050	< 0.050
4-Chlorophenyl phenyl ether	< 1000	< 10	< 100	< 10	< 0.050	< 0.050
Chrysene	< 1000	< 10	< 100	< 10	< 0.050	< 0.050
Dibenz(a,h)anthracene	< 1000	< 10	< 100	< 10	< 0.050	< 0.050
Dibenzofuran	< 1000	< 10	< 100	< 10	< 0.050	< 0.050
Di-n-butyl phthalate	< 1000	< 10	< 100	< 10	< 0.050	< 0.050
1,2-Dichlorobenzene	< 1000	< 10	< 100	< 10	< 0.050	< 0.050
1,3-Dichlorobenzene	< 1000	< 10	< 100	< 10	< 0.050	< 0.050
1,4-Dichlorobenzene	< 1000	< 10	< 100	< 10	< 0.050	< 0.050
3,3'-Dichlorobenzidine	< 2000	< 20	< 200	< 20	< 0.10	< 0.10
2,4-Dichlorophenol	< 1000	< 10	< 100	< 10	< 0.050	< 0.050
Diethyl phthalate	< 1000	< 10	< 100	< 10	< 0.050	< 0.050
2,4-Dimethylphenol	< 1000	< 10	< 100	< 10	< 0.050	< 0.050
Dimethyl phthalate	< 1000	< 10	< 100	< 10	< 0.050	< 0.050
4,6-Dinitro-2-methylphenol	< 5000	< 50	< 500	< 50	< 0.25	< 0.25

TABLE 2-17. (Cont.) PROCESS STREAM SEMIVOLATILE ORGANICS SUMMARY

Deactivation Furnace System Agent Trial Burn - Run 3

Run 3 Date: 10-Jan-97	Process Stream Concentrations					
	Scrubber Recirc. (Brine) ug/L	Process Water ug/L	Caustic (NaOH) ug/L	Stack Condensate ug/L	Heated Discharge Conveyor Ash mg/L	Cyclone Residue mg/L
2,4-Dinitrophenol	< 5000	< 50	< 500	< 50	< 0.25	< 0.25
2,4-Dinitrotoluene	< 1000	< 10	< 100	< 10	< 0.050	< 0.050
2,6-Dinitrotoluene	< 1000	< 10	< 100	< 10	< 0.050	< 0.050
Di-n-octyl phthalate	< 1000	< 10	< 100	< 10	< 0.050	< 0.050
bis(2-Ethylhexyl)-phthalate	< 1000	< 10	< 100	< 10	< 0.25	< 0.25
Fluoranthene	< 1000	< 10	< 100	< 10	< 0.050	< 0.050
Fluorene	< 1000	< 10	< 100	< 10	< 0.050	< 0.050
Hexachlorobenzene	< 1000	< 10	< 100	< 10	< 0.050	< 0.050
Hexachlorobutadiene	< 1000	< 10	< 100	< 10	< 0.050	< 0.050
Hexachlorocyclopentadiene	< 1000	< 10	< 100	< 10	< 0.050	< 0.050
Hexachloroethane	< 1000	< 10	< 100	< 10	< 0.050	< 0.050
Indeno(1,2,3-cd)pyrene	< 1000	< 10	< 100	< 10	< 0.050	< 0.050
Isophorone	< 1000	< 10	< 100	< 10	< 0.050	< 0.050
2-Methylnapthalene	< 1000	< 10	< 100	< 10	< 0.050	< 0.050
2-Methylphenol	< 1000	< 10	< 100	< 10	< 0.050	< 0.050
4-Methylphenol	< 1000	< 10	< 100	< 10	< 0.050	< 0.050
Naphthalene	< 1000	< 10	< 100	< 10	< 0.050	< 0.050
2-Nitroaniline	< 5000	< 50	< 500	< 50	< 0.25	< 0.25
3-Nitroaniline	< 5000	< 50	< 500	< 50	< 0.25	< 0.25
4-Nitroaniline	< 5000	< 50	< 500	< 50	< 0.25	< 0.25
Nitrobenzene	< 1000	< 10	< 100	< 10	< 0.050	< 0.050
2-Nitrophenol	< 1000	< 10	< 100	< 10	< 0.050	< 0.050
4-Nitrophenol	< 5000	< 50	< 500	< 50	< 0.25	< 0.25
N-Nitrosodiphenylamine	< 1000	< 10	< 100	< 10	< 0.050	< 0.050
N-Nitroso-di-n-propylamine	< 1000	< 10	< 100	< 10	< 0.050	< 0.050
Pentachlorophenol	< 5000	< 50	< 500	< 50	< 0.25	< 0.25
Phenanthrene	< 1000	< 10	< 100	< 10	< 0.050	< 0.050
Phenol	< 1000	< 10	< 100	< 10	< 0.050	< 0.050
Pyrene	< 1000	< 10	< 100	< 10	< 0.050	< 0.050
1,2,4-Trichlorobenzene	< 1000	< 10	< 100	< 10	< 0.050	< 0.050
2,4,5-Trichlorophenol	< 1000	< 10	< 100	< 10	< 0.050	< 0.050
2,4,6-Trichlorophenol	< 1000	< 10	< 100	< 10	< 0.050	< 0.050
Decamethylcyclopentasiloxane (TIC)	-	-	-	5.1	-	-

TABLE 2-17. (Cont.) PROCESS STREAM SEMIVOLATILE ORGANICS SUMMARY

Deactivation Furnace System Agent Trial Burn - Run 4

Run 4 Date: 11-Jan-97	Process Stream Concentrations					
	Scrubber Recirc. (Brine) ug/L	Process Water ug/L	Caustic (NaOH) ug/L	Stack Condensate ug/L	Heated Discharge Conveyor Ash mg/L	Cyclone Residue mg/L
Acenaphthene	< 1000	< 10	< 100	< 10	< 0.050	< 0.050
Acenapthylene	< 1000	< 10	< 100	< 10	< 0.050	< 0.050
Anthracene	< 1000	< 10	< 100	< 10	< 0.050	< 0.050
Benzo (a) anthracene	< 1000	< 10	< 100	< 10	< 0.050	< 0.050
Benzo (b) fluoranthrene	< 1000	< 10	< 100	< 10	< 0.050	< 0.050
Benzo (k) fluoranthrene	< 1000	< 10	< 100	< 10	< 0.050	< 0.050
Benzo (g,h,i) perylene	< 1000	< 10	< 100	< 10	< 0.050	< 0.050
Benzo (a) pyrene	< 1000	< 10	< 100	< 10	< 0.050	< 0.050
Benzoic acid	< 5000	< 50	< 500	< 50	< 0.25	< 0.25
Benzyl alcohol	< 1000	< 10	< 100	< 10	< 0.050	< 0.050
4-Bromophenyl phenyl ether	< 1000	< 10	< 100	< 10	< 0.050	< 0.050
Butyl benzyl phthalate	< 1000	< 10	< 100	< 10	< 0.050	< 0.050
4-Chloroaniline	< 1000	< 10	< 100	< 10	< 0.050	< 0.050
bis(2-Chloroethoxy)-methane	< 1000	< 10	< 100	< 10	< 0.050	< 0.050
bis(2-Chloroethyl) ether	< 1000	< 10	< 100	< 10	< 0.050	< 0.050
2,2'-Oxybis (1-chloropropane)	< 1000	< 10	< 100	< 10	< 0.050	< 0.050
4-Chloro-3-methylphenol	< 1000	< 10	< 100	< 10	< 0.050	< 0.050
2-Chloronaphthalene	< 1000	< 10	< 100	< 10	< 0.050	< 0.050
2-Chlorophenol	< 1000	< 10	< 100	< 10	< 0.050	< 0.050
4-Chlorophenyl phenyl ether	< 1000	< 10	< 100	< 10	< 0.050	< 0.050
Chrysene	< 1000	< 10	< 100	< 10	< 0.050	< 0.050
Dibenz(a,h)anthracene	< 1000	< 10	< 100	< 10	< 0.050	< 0.050
Dibenzofuran	< 1000	< 10	< 100	< 10	< 0.050	< 0.050
Di-n-butyl phthalate	< 1000	< 10	< 100	< 10	< 0.050	< 0.050
1,2-Dichlorobenzene	< 1000	< 10	< 100	< 10	< 0.050	< 0.050
1,3-Dichlorobenzene	< 1000	< 10	< 100	< 10	< 0.050	< 0.050
1,4-Dichlorobenzene	< 1000	< 10	< 100	< 10	< 0.050	< 0.050
3,3'-Dichlorobenzidine	< 2000	< 20	< 200	< 20	< 0.10	< 0.10
2,4-Dichlorophenol	< 1000	< 10	< 100	< 10	< 0.050	< 0.050
Diethyl phthalate	< 1000	< 10	< 100	< 10	< 0.050	< 0.050
2,4-Dimethylphenol	< 1000	< 10	< 100	< 10	< 0.050	< 0.050

TABLE 2-17. (Cont.) PROCESS STREAM SEMIVOLATILE ORGANICS SUMMARY

Deactivation Furnace System Agent Trial Burn - Run 4

Run 4 Date: 11-Jan-97	Process Stream Concentrations					
	Scrubber Recirc. (Brine) ug/L	Process Water ug/L	Caustic (NaOH) ug/L	Stack Condensate ug/L	Heated Discharge Conveyor Ash mg/L	Cyclone Residue mg/L
Dimethyl phthalate	< 1000	< 10	< 100	< 10	< 0.050	< 0.050
4,6-Dinitro-2-methylphenol	< 5000	< 50	< 500	< 50	< 0.25	< 0.25
2,4-Dinitrophenol	< 5000	< 50	< 500	< 50	< 0.25	< 0.25
2,4-Dinitrotoluene	< 1000	< 10	< 100	< 10	< 0.050	< 0.050
2,6-Dinitrotoluene	< 1000	< 10	< 100	< 10	< 0.050	< 0.050
Di-n-octyl phthalate	< 1000	< 10	< 100	< 10	< 0.050	< 0.050
bis(2-Ethylhexyl)-phthalate	< 1000	< 10	< 100	< 10	< 0.25	< 0.25
Fluoranthene	< 1000	< 10	< 100	< 10	< 0.050	< 0.050
Fluorene	< 1000	< 10	< 100	< 10	< 0.050	< 0.050
Hexachlorobenzene	< 1000	< 10	< 100	< 10	< 0.050	< 0.050
Hexachlorobutadiene	< 1000	< 10	< 100	< 10	< 0.050	< 0.050
Hexachlorocyclopentadiene	< 1000	< 10	< 100	< 10	< 0.050	< 0.050
Hexachloroethane	< 1000	< 10	< 100	< 10	< 0.050	< 0.050
Indeno(1,2,3-cd)pyrene	< 1000	< 10	< 100	< 10	< 0.050	< 0.050
Isophorone	< 1000	< 10	< 100	< 10	< 0.050	< 0.050
2-Methylnapthalene	< 1000	< 10	< 100	< 10	< 0.050	< 0.050
2-Methylphenol	< 1000	< 10	< 100	< 10	< 0.050	< 0.050
4-Methylphenol	< 1000	< 10	< 100	< 10	< 0.050	< 0.050
Naphthalene	< 1000	< 10	< 100	< 10	< 0.050	< 0.050
2-Nitroaniline	< 5000	< 50	< 500	< 50	< 0.25	< 0.25
3-Nitroaniline	< 5000	< 50	< 500	< 50	< 0.25	< 0.25
4-Nitroaniline	< 5000	< 50	< 500	< 50	< 0.25	< 0.25
Nitrobenzene	< 1000	< 10	< 100	< 10	< 0.050	< 0.050
2-Nitrophenol	< 1000	< 10	< 100	< 10	< 0.050	< 0.050
4-Nitrophenol	< 5000	< 50	< 500	< 50	< 0.25	< 0.25
N-Nitrosodiphenylamine	< 1000	< 10	< 100	< 10	< 0.050	< 0.050
N-Nitroso-di-n-propylamine	< 1000	< 10	< 100	< 10	< 0.050	< 0.050
Pentachlorophenol	< 5000	< 50	< 500	< 50	< 0.25	< 0.25
Phenanthrene	< 1000	< 10	< 100	< 10	< 0.050	< 0.050
Phenol	< 1000	< 10	< 100	< 10	< 0.050	< 0.050
Pyrene	< 1000	< 10	< 100	< 10	< 0.050	< 0.050

TABLE 2-17. (Cont.) PROCESS STREAM SEMIVOLATILE ORGANICS SUMMARY

Deactivation Furnace System Agent Trial Burn - Run 4

Run 4 Date: 11-Jan-97	Process Stream Concentrations					
	Scrubber Recirc. (Brine) ug/L	Process Water ug/L	Caustic (NaOH) ug/L	Stack Condensate ug/L	Heated Discharge Conveyor Ash mg/L	Cyclone Residue mg/L
1,2,4-Trichlorobenzene	< 1000	< 10	< 100	< 10	< 0.050	< 0.050
2,4,5-Trichlorophenol	< 1000	< 10	< 100	< 10	< 0.050	< 0.050
2,4,6-Trichlorophenol	< 1000	< 10	< 100	< 10	< 0.050	< 0.050
Decamethylcyclopentasiloxane (TIC)	-	-	-	-	-	-

TABLE 2-18. PROCESS STREAMS POLYCHLORINATED BIPHENYL SUMMARY
Deactivation Furnace System Agent Trial Burn

Run No. 1 Date: 07-Jan-97	Process Stream Concentrations					
	Scrubber Recirc. (Brine) ng/L	Process Water ng/L	Caustic (NaOH) ng/L	Stack Condensate ng/L	Heated Discharge Conveyor Ash ng/g	Cyclone Residue ng/g
Total Monochlorobiphenyls	< 1.0	< 1.0	< 1.0	< 1.0	30.0	< 1.0
Total Dichlorobiphenyls	< 1.0	< 1.0	< 1.0	< 1.0	2.6	< 1.0
Total Trichlorobiphenyls	< 1.0	< 1.0	< 1.0	< 1.0	< 1.0	< 1.0
3,3', 4,4'- TetraCB	< 1.0	< 1.0	< 1.0	< 1.0	< 1.0	< 1.0
3,4,4', 5- TetraCB	< 1.0	< 1.0	< 1.0	< 1.0	< 1.0	< 1.0
Total Tetrachlorobiphenyls	< 1.0	< 1.0	< 1.0	< 1.0	< 1.0	3.0
2,3', 4,4', 5- PentaCB	< 1.0	< 1.0	< 1.0	< 1.0	< 1.0	2.3
2,3,3', 4,4'- PentaCB	< 1.0	< 1.0	< 1.0	< 1.0	< 1.0	< 1.0
2,3,4,4', 5- PentaCB	< 1.0	< 1.0	< 1.0	< 1.0	< 1.0	< 1.0
3,3', 4,4', 5- PentaCB	< 1.0	< 1.0	< 1.0	< 1.0	< 1.0	< 1.0
Total Pentachlorobiphenyls	< 1.0	< 1.0	< 1.0	< 1.0	< 1.0	9.8
2,3,3', 4,4', 5- HexaCB	< 1.0	< 1.0	< 1.0	< 1.0	< 1.0	< 1.0
2,3,3', 4,4', 5'- HexaCB	< 1.0	< 1.0	< 1.0	< 1.0	< 1.0	< 1.0
2,3', 4,4', 5,5'- HexaCB	< 1.0	< 1.0	< 1.0	< 1.0	< 1.0	< 1.0
3,3', 4,4', 5,5'- HexaCB	< 1.0	< 1.0	< 1.0	< 1.0	< 1.0	< 1.0
Total Hexachlorobiphenyls	< 1.0	< 1.0	< 1.0	< 1.0	< 1.0	5.6
2,3,3', 4,4', 5,5'- HeptaCB	< 1.0	< 1.0	< 1.0	< 1.0	< 1.0	< 1.0
Total Heptachlorobiphenyls	< 1.0	< 1.0	< 1.0	< 1.0	< 1.0	< 1.0
Total Octachlorobiphenyls	< 1.0	< 1.0	< 1.0	< 1.0	< 1.0	< 1.0
Total Nonachlorobiphenyls	< 1.0	< 1.0	< 1.0	< 1.0	< 1.0	< 1.0
Decachlorobiphenyl	< 1.0	< 1.0	< 1.0	< 1.0	< 1.0	< 1.0
Sum (based on Total Homologs)	< 10.0 ng/L	< 10.0 ng/L	< 10.0 ng/L	< 10.0 ng/L	< 40.6 ng/g	< 25.4 ng/g

TABLE 2-18. (Cont.) PROCESS STREAMS POLYCHLORINATED BIPHENYL SUMMARY
Deactivation Furnace System Agent Trial Burn

Run No. 3 Date: 10-Jan-97	Process Stream Concentrations					
	Scrubber Recirc. (Brine) ng/L	Process Water ng/L	Caustic (NaOH) ng/L	Stack Condensate ng/L	Heated Discharge Conveyor Ash ng/g	Cyclone Residue ng/g
Total Monochlorobiphenyls	< 1.0	< 1.0	< 1.0	< 1.0	< 1.0	< 1.0
Total Dichlorobiphenyls	< 1.0	< 1.0	< 1.0	< 1.0	< 1.0	< 1.0
Total Trichlorobiphenyls	< 1.0	< 1.0	< 1.0	< 1.0	< 1.0	< 1.0
3,3', 4,4'- TetraCB	< 1.0	< 1.0	< 1.0	< 1.0	< 1.0	< 1.0
3,4,4', 5- TetraCB	< 1.0	< 1.0	< 1.0	< 1.0	< 1.0	< 1.0
Total Tetrachlorobiphenyls	< 1.0	< 1.0	< 1.0	< 1.0	< 1.0	< 1.0
2,3', 4,4', 5- PentaCB	< 1.0	< 1.0	< 1.0	< 1.0	< 1.0	< 1.0
2,3,3', 4,4'- PentaCB	< 1.0	< 1.0	< 1.0	< 1.0	< 1.0	< 1.0
2,3,4,4', 5- PentaCB	< 1.0	< 1.0	< 1.0	< 1.0	< 1.0	< 1.0
3,3', 4,4', 5- PentaCB	< 1.0	< 1.0	< 1.0	< 1.0	< 1.0	< 1.0
Total Pentachlorobiphenyls	< 1.0	< 1.0	< 1.0	< 1.0	< 1.0	< 1.0
2,3,3', 4,4', 5- HexaCB	< 1.0	< 1.0	< 1.0	< 1.0	< 1.0	< 1.0
2,3,3', 4,4', 5'- HexaCB	< 1.0	< 1.0	< 1.0	< 1.0	< 1.0	< 1.0
2,3', 4,4', 5,5'- HexaCB	< 1.0	< 1.0	< 1.0	< 1.0	< 1.0	< 1.0
3,3', 4,4', 5,5'- HexaCB	< 1.0	< 1.0	< 1.0	< 1.0	< 1.0	< 1.0
Total Hexachlorobiphenyls	< 1.0	< 1.0	< 1.0	< 1.0	< 1.0	< 1.0
2,3,3', 4,4', 5,5'- HeptaCB	< 1.0	< 1.0	< 1.0	< 1.0	< 1.0	< 1.0
Total Heptachlorobiphenyls	< 1.0	< 1.0	< 1.0	< 1.0	< 1.0	< 1.0
Total Octachlorobiphenyls	< 1.0	< 1.0	< 1.0	< 1.0	< 1.0	< 1.0
Total Nonachlorobiphenyls	< 1.0	< 1.0	< 1.0	< 1.0	< 1.0	< 1.0
Decachlorobiphenyl	< 1.0	< 1.0	< 1.0	< 1.0	< 1.0	< 1.0
Sum (based on Total Homologs)	< 10.0 ng/L	< 10.0 ng/L	< 10.0 ng/L	< 10.0 ng/L	< 10.0 ng/g	< 10.0 ng/g

TABLE 2-18. (Cont.) PROCESS STREAMS POLYCHLORINATED BIPHENYL SUMMARY
Deactivation Furnace System Agent Trial Burn

Run No. 4 Date: 11-Jan-97	Process Stream Concentrations					
	Scrubber Recirc. (Brine) ng/L	Process Water ng/L	Caustic (NaOH) ng/L	Stack Condensate ng/L	Heated Discharge Conveyor Ash ng/g	Cyclone Residue ng/g
Total Monochlorobiphenyls	< 1.0	< 1.0	< 1.0	< 1.0	6.0	< 1.0
Total Dichlorobiphenyls	< 1.0	< 1.0	< 1.0	< 1.0	1.2	< 1.0
Total Trichlorobiphenyls	< 1.0	< 1.0	< 1.0	< 1.0	< 1.0	< 1.0
3,3', 4,4'- TetraCB	< 1.0	< 1.0	< 1.0	< 1.0	< 1.0	< 1.0
3,4,4', 5- TetraCB	< 1.0	< 1.0	< 1.0	< 1.0	< 1.0	< 1.0
Total Tetrachlorobiphenyls	< 1.0	< 1.0	< 1.0	< 1.0	< 1.0	1.2
2,3', 4,4', 5- PentaCB	< 1.0	< 1.0	< 1.0	< 1.0	< 1.0	1.1
2,3,3', 4,4'- PentaCB	< 1.0	< 1.0	< 1.0	< 1.0	< 1.0	< 1.0
2,3,4,4', 5- PentaCB	< 1.0	< 1.0	< 1.0	< 1.0	< 1.0	< 1.0
3,3', 4,4', 5- PentaCB	< 1.0	< 1.0	< 1.0	< 1.0	< 1.0	< 1.0
Total Pentachlorobiphenyls	< 1.0	< 1.0	< 1.0	< 1.0	< 1.0	1.1
2,3,3', 4,4', 5- HexaCB	< 1.0	< 1.0	< 1.0	< 1.0	< 1.0	< 1.0
2,3,3', 4,4', 5'- HexaCB	< 1.0	< 1.0	< 1.0	< 1.0	< 1.0	< 1.0
2,3', 4,4', 5,5'- HexaCB	< 1.0	< 1.0	< 1.0	< 1.0	< 1.0	< 1.0
3,3', 4,4', 5,5'- HexaCB	< 1.0	< 1.0	< 1.0	< 1.0	< 1.0	< 1.0
Total Hexachlorobiphenyls	< 1.0	< 1.0	< 1.0	< 1.0	< 1.0	< 1.0
2,3,3', 4,4', 5,5'- HeptaCB	< 1.0	< 1.0	< 1.0	< 1.0	< 1.0	< 1.0
Total Heptachlorobiphenyls	< 1.0	< 1.0	< 1.0	< 1.0	< 1.0	< 1.0
Total Octachlorobiphenyls	< 1.0	< 1.0	< 1.0	< 1.0	< 1.0	< 1.0
Total Nonachlorobiphenyls	< 1.0	< 1.0	< 1.0	< 1.0	< 1.0	< 1.0
Decachlorobiphenyl	< 1.0	< 1.0	< 1.0	< 1.0	< 1.0	< 1.0
Sum (based on Total Homologs)	< 10.0 ng/L	< 10.0 ng/L	< 10.0 ng/L	< 10.0 ng/L	< 15.2 ng/g	< 10.3 ng/g

2.6.4 PCDD/PCDF

Samples were collected during each agent trial burn run at the six process stream sampling locations. Table 2-19 presents the results and averages for PCDDs/PCDFs for each process stream during these performance runs. Individual congeners and total homologues are reported in Table 2-19. No PCDD or PCDF congeners were detected in any of the liquid process stream samples.

Concentrations of PCDDs/PCDFs were found in the solid process stream samples. Total concentrations were in the low ppb range. The TEQ concentrations for the cyclone bin residue averaged 51 parts per trillion (ppt) and the HDC residue averaged 37 ppt.

2.6.5 Metals

Samples were collected during each agent trial burn run at the six process streams sampling locations. Table 2-20 presents the results for metals for each process stream during these performance runs. As one would expect, metals concentrations for the different streams were highly variable, but less so from run to run.

In all Scrubber Brine samples, all target elements were detected with the exception of Al, Be, Hg, Se, Ag, Tl, and Sn. In all Process Water samples, all elements were not-detects, with the exception of Zn. In the Caustic samples, Al, B, V, and Zn were detected in all runs. Copper (Cu) was found in the Run 3 and 4 samples. In all Stack Condensate samples, all elements were not-detects, with the exception of Mn and Zn. Cadmium (Cd) was found in the Run 3 sample at a concentration slightly above the PQL.

In all HDC samples, all target elements were detected with the exception of Be, Hg, Se, Ag, and Sn. Antimony was not found in Run 1. Arsenic and Sn were not found in Runs 1 and 3. In all Cyclone residue samples, all target elements were detected with the exception of Be, Hg, Se, Tl, and Sn. Silver was not found in Runs 1 and 4, but was found in a low concentration in Run 3.

The TCLP leachates for the HDC and CB samples yielded similar results for all runs. For the HDC samples, only Ba and Cd were detected in all three runs. No other elements were detected. For the CB samples, Ba and Cr were detected in all three runs and Cd was detected in Run 3 only. The TCLP limits were exceeded for cadmium on the HDC residue for Runs 3 and 4. The other TCLP analyses were below the TCLP limits.

TABLE 2-19. PROCESS STREAM DIOXIN/FURAN SUMMARY

Deactivation Furnace System Agent Trial Burn - Run 1

Date: 07-Jan-97	Process Stream Concentrations					
	Scrubber Recirc. (Brine) ng/L	Process Water ng/L	Caustic (NaOH) ng/L	Stack Condensate ng/L	Heated Discharge Conveyor Ash pg/g	Cyclone Residue pg/g
PCDD (Dioxin) Isomers						
2,3,7,8 TCDD	< 0.67	< 0.65	< 0.55	< 0.53	0.51	26
Total TCDD	< 0.67	< 0.65	< 0.55	< 0.53	30	1.0
1,2,3,7,8 PeCDD	< 1.3	< 1.1	< 1.1	< 1.2	< 0.88	< 1.2
Total PeCDD	< 1.3	< 1.1	< 1.1	< 1.2	8.8	14
1,2,3,4,7,8 HxCDD	< 0.91	< 0.60	< 0.69	< 0.69	< 0.70	< 0.72
1,2,3,6,7,8 HxCDD	< 1.00	< 0.68	< 0.78	< 0.78	< 0.95	< 1.2
1,2,3,7,8,9 HxCDD	< 0.90	< 0.59	< 0.68	< 0.68	< 2.0	< 1.4
Total HxCDD	< 0.90	< 0.59	< 0.68	< 0.68	8.4	17
1,2,3,4,6,7,8 HpCDD	< 0.52	< 0.40	< 0.7	< 0.42	3.4	3.5
Total HpCDD	< 0.52	< 0.40	< 0.7	< 0.42	7.8	6.2
Total OCDD	< 1.1	< 0.82	< 1.1	< 1.0	< 4.9	< 2.8
Sum (based on Total Isomers)	< 4.49 ng/L	< 3.56 ng/L	< 4.12 ng/L	< 3.83 ng/L	59.9 pg/g	41.0 pg/g
PCDF (Furan) Isomers						
2,3,7,8 TCDF	< 0.72	< 0.67	< 0.73	< 0.70	13	370
Total TCDF	< 0.72	< 0.67	< 0.73	< 0.70	490	2700
1,2,3,7,8 PeCDF	< 0.50	< 0.48	< 0.54	< 0.53	9.1	72
2,3,4,7,8 PeCDF	< 0.50	< 0.47	< 0.53	< 0.52	16	82
Total PeCDF	< 0.50	< 0.47	< 0.53	< 0.52	200	700
1,2,3,4,7,8 HxCDF	< 0.63	< 0.46	< 0.65	< 0.52	13	12
1,2,3,6,7,8 HxCDF	< 0.62	< 0.45	< 0.64	< 0.51	9.8	8.1
2,3,4,6,7,8 HxCDF	< 0.64	< 0.46	< 0.66	< 0.52	10	5.4
1,2,3,7,8,9 HxCDF	< 0.74	< 0.54	< 0.77	< 0.61	< 0.29	< 0.73
Total HxCDF	< 0.62	< 0.45	< 0.64	< 0.51	82	50
1,2,3,4,6,7,8 HpCDF	< 0.78	< 0.47	< 0.80	< 0.47	35	3.7
1,2,3,4,7,8,9 HpCDF	< 0.96	< 0.58	< 0.99	< 0.59	2.8	< 0.88
Total HpCDF	< 0.78	< 0.47	< 0.80	< 0.47	48	3.7
Total OCDF	< 1.5	< 1.1	< 1.4	< 1.4	9.4	< 1.4
Sum (based on Total Isomers)	< 4.12 ng/L	< 3.16 ng/L	< 4.10 ng/L	< 3.60 ng/L	829 pg/g	< 3,455 pg/g

"Non-detects" are included at the applicable PQL.

TABLE 2-19. (Cont.) PROCESS STREAM DIOXIN/FURAN SUMMARY

Deactivation Furnace System Agent Trial Burn - Run 3

Date: 10-Jan-97	Process Stream Concentrations					
	Scrubber Recirc. (Brine) ng/L	Process Water ng/L	Caustic (NaOH) ng/L	Stack Condensate ng/L	Heated Discharge Conveyor Ash pg/g	Cyclone Residue pg/g
PCDD (Dioxin) Isomers						
2,3,7,8 TCDD	< 0.53	< 0.53	< 0.53	< 0.55	68	< 0.20
Total TCDD	< 0.53	< 0.53	< 0.53	< 0.55	0.90	< 0.36
1,2,3,7,8 PeCDD	< 0.75	< 0.88	< 1.2	< 0.79	< 1.9	< 0.29
Total PeCDD	< 0.75	< 0.88	< 1.2	< 0.79	23	< 0.74
1,2,3,4,7,8 HxCDD	< 0.71	< 0.82	< 0.63	< 0.72	< 1.1	< 0.48
1,2,3,6,7,8 HxCDD	< 0.81	< 0.93	< 0.71	< 0.81	< 1.7	< 0.47
1,2,3,7,8,9 HxCDD	< 0.70	< 0.81	< 0.62	< 0.71	3.3	< 0.45
Total HxCDD	< 0.70	< 0.81	< 0.62	< 0.71	21	< 0.48
1,2,3,4,6,7,8 HpCDD	< 0.42	< 0.98	< 0.91	< 0.55	4.2	< 0.40
Total HpCDD	< 0.42	< 0.98	< 0.91	< 0.55	8.9	< 0.40
Total OCDD	< 0.89	< 0.86	< 0.90	< 0.81	< 4.2	< 1.0
Sum (based on Total Isomers)	< 3.29 ng/L	< 4.06 ng/L	< 4.16 ng/L	< 3.41 ng/L	< 58.0 pg/g	< 2.98 pg/g
PCDF (Furan) Isomers						
2,3,7,8 TCDF	< 0.75	< 0.71	< 0.82	< 0.73	31	3.3
Total TCDF	< 0.75	< 0.71	< 0.82	< 0.73	1200	23
1,2,3,7,8 PeCDF	< 0.46	< 0.56	< 0.50	< 0.46	20	< 1.0
2,3,4,7,8 PeCDF	< 0.45	< 0.56	< 0.49	< 0.46	30	< 0.88
Total PeCDF	< 0.45	< 0.56	< 0.49	< 0.46	460	3.3
1,2,3,4,7,8 HxCDF	< 0.51	< 0.53	< 0.54	< 0.49	21	< 0.51
1,2,3,6,7,8 HxCDF	< 0.50	< 0.52	< 0.52	< 0.48	18	< 0.32
2,3,4,6,7,8 HxCDF	< 0.52	< 0.53	< 0.54	< 0.50	17	< 0.55
1,2,3,7,8,9 HxCDF	< 0.61	< 0.62	< 0.63	< 0.58	< 0.67	< 0.13
Total HxCDF	< 0.50	< 0.52	< 0.52	< 0.48	160	< 0.55
1,2,3,4,6,7,8 HpCDF	< 0.45	< 0.46	< 0.44	< 0.43	44	< 0.44
1,2,3,4,7,8,9 HpCDF	< 0.55	< 0.57	< 0.55	< 0.53	3.7	< 0.53
Total HpCDF	< 0.45	< 0.46	< 0.44	< 0.43	61	< 0.53
Total OCDF	< 1.3	< 1.4	< 1.1	< 1.2	9.4	< 0.45
Sum (based on Total Isomers)	< 3.45 ng/L	< 3.65 ng/L	< 3.37 ng/L	< 3.30 ng/L	1,890 pg/g	< 27.8 pg/g

"Non-detects" are included at the applicable PQL.

TABLE 2-19. (Cont.) PROCESS STREAM DIOXIN/FURAN SUMMARY

Deactivation Furnace System Agent Trial Burn - Run 4

Date: 11-Jan-97	Process Stream Concentrations					
	Scrubber Recirc. (Brine) ng/L	Process Water ng/L	Caustic (NaOH) ng/L	Stack Condensate ng/L	Heated Discharge Conveyor Ash pg/g	Cyclone Residue pg/g
PCDD (Dioxin) Isomers						
2,3,7,8 TCDD	< 0.67	< 0.52	< 0.41	< 0.75	1.2	2.4
Total TCDD	< 0.67	< 0.52	< 0.41	< 0.75	130	540
1,2,3,7,8 PeCDD	< 0.84	< 0.98	< 0.92	< 1.1	5.1	12
Total PeCDD	< 0.84	< 0.98	< 0.92	< 1.1	100	610
1,2,3,4,7,8 HxCDD	< 0.45	< 0.62	< 0.63	< 0.89	5.5	13
1,2,3,6,7,8 HxCDD	< 0.49	< 0.71	< 0.72	< 0.97	7.0	31
1,2,3,7,8,9 HxCDD	< 0.46	< 0.62	< 0.63	< 0.92	18	41
Total HxCDD	< 0.45	< 0.62	< 0.63	< 0.89	99	750
1,2,3,4,6,7,8 HpCDD	< 0.33	< 0.37	< 0.78	< 0.54	24	98
Total HpCDD	< 0.33	< 0.37	< 0.78	< 0.54	51	160
Total OCDD	< 0.61	< 0.75	< 0.83	< 0.79	21	46
Sum (based on Total Isomers)	< 2.90 ng/L	< 3.24 ng/L	< 3.57 ng/L	< 4.07 ng/L	401 pg/g	2,106 pg/g
PCDF (Furan) Isomers						
2,3,7,8 TCDF	< 0.66	< 0.70	< 0.65	< 0.66	28	120
Total TCDF	< 0.66	< 0.70	< 0.65	< 0.66	1400	1300
1,2,3,7,8 PeCDF	< 0.34	< 0.53	< 0.43	< 0.49	30	47
2,3,4,7,8 PeCDF	< 0.33	< 0.53	< 0.42	< 0.48	75	54
Total PeCDF	< 0.33	< 0.53	< 0.42	< 0.48	920	510
1,2,3,4,7,8 HxCDF	< 0.33	< 0.54	< 0.49	< 0.52	57	30
1,2,3,6,7,8 HxCDF	< 0.35	< 0.52	< 0.47	< 0.55	46	25
2,3,4,6,7,8 HxCDF	< 0.35	< 0.54	< 0.49	< 0.56	63	14
1,2,3,7,8,9 HxCDF	< 0.41	< 0.63	< 0.57	< 0.65	< 1.2	2.6
Total HxCDF	< 0.33	< 0.52	< 0.47	< 0.52	480	160
1,2,3,4,6,7,8 HpCDF	< 0.49	< 0.71	< 0.39	< 0.48	160	38
1,2,3,4,7,8,9 HpCDF	< 0.62	< 0.87	< 0.49	< 0.61	12	8.1
Total HpCDF	< 0.49	< 0.71	< 0.39	< 0.48	230	62
Total OCDF	< 0.99	< 1.2	< 1.3	< 1.6	29	14
Sum (based on Total Isomers)	< 2.80 ng/L	< 3.66 ng/L	< 3.23 ng/L	< 3.74 ng/L	3,059 pg/g	2,046 pg/g

Non-detects" are included at the applicable PQL.

TABLE 2-19. (Cont.) PROCESS STREAM DIOXIN/FURAN SUMMARY

Deactivation Furnace System Agent Trial Burn - Averages

Dates: 07, 10, 11-Jan-97	Average Process Stream Concentrations					
	Scrubber Recirc. (Brine) ng/L	Process Water ng/L	Caustic (NaOH) ng/L	Stack Condensate ng/L	Heated Discharge Conveyor Ash pg/g	Cyclone Residue pg/g
PCDD (Dioxin) Isomers						
2,3,7,8 TCDD	< 0.62	< 0.57	< 0.50	< 0.61	23.24	< 9.53
Total TCDD	< 0.62	< 0.57	< 0.50	< 0.61	53.63	< 180.45
1,2,3,7,8 PeCDD	< 0.96	< 0.99	< 1.1	< 1.0	< 2.6	< 4.5
Total PeCDD	< 0.96	< 0.99	< 1.1	< 1.0	43.9	< 208.2
1,2,3,4,7,8 HxCDD	< 0.69	< 0.68	< 0.65	< 0.77	< 2.43	< 4.73
1,2,3,6,7,8 HxCDD	< 0.77	< 0.77	< 0.74	< 0.85	< 3.22	< 10.89
1,2,3,7,8,9 HxCDD	< 0.69	< 0.67	< 0.64	< 0.77	< 7.77	< 14.28
Total HxCDD	< 0.68	< 0.67	< 0.64	< 0.76	42.80	< 255.83
1,2,3,4,6,7,8 HpCDD	< 0.42	< 0.58	< 0.79	< 0.50	10.53	< 33.97
Total HpCDD	< 0.42	< 0.58	< 0.79	< 0.50	22.57	< 55.53
Total OCDD	< 0.87	< 0.81	< 0.94	< 0.87	< 10.0	< 16.6
Sum (based on Total Isomers)	< 3.56 ng/L	< 3.62 ng/L	< 3.95 ng/L	< 3.77 ng/L	< 173 pg/g	< 717 pg/g
PCDF (Furan) Isomers						
2,3,7,8 TCDF	< 0.71	< 0.69	< 0.73	< 0.70	24	164.4
Total TCDF	< 0.71	< 0.69	< 0.73	< 0.70	1030	1341
1,2,3,7,8 PeCDF	< 0.43	< 0.52	< 0.49	< 0.49	19.7	< 40.0
2,3,4,7,8 PeCDF	< 0.43	< 0.52	< 0.48	< 0.49	40	< 46
Total PeCDF	< 0.43	< 0.52	< 0.48	< 0.49	527	404.4
1,2,3,4,7,8 HxCDF	< 0.49	< 0.51	< 0.56	< 0.51	30	< 14.17
1,2,3,6,7,8 HxCDF	< 0.49	< 0.50	< 0.54	< 0.51	24.6	< 11.14
2,3,4,6,7,8 HxCDF	< 0.50	< 0.51	< 0.56	< 0.53	30	< 6.65
1,2,3,7,8,9 HxCDF	< 0.59	< 0.60	< 0.66	< 0.61	< 0.72	< 1.15
Total HxCDF	< 0.48	< 0.50	< 0.54	< 0.50	241	< 70.18
1,2,3,4,6,7,8 HpCDF	< 0.57	< 0.55	< 0.54	< 0.46	80	< 14.05
1,2,3,4,7,8,9 HpCDF	< 0.71	< 0.67	< 0.68	< 0.58	6.2	< 3.17
Total HpCDF	< 0.57	< 0.55	< 0.54	< 0.46	113	< 22.08
Total OCDF	< 1.3	< 1.2	< 1.3	< 1.4	15.9	< 5.3
Sum (based on Total Isomers)	< 3.46 ng/L	< 3.49 ng/L	< 3.57 ng/L	< 3.55 ng/L	1,926.3 pg/g	< 1,843.0 pg/g

[1] = *Unless noted otherwise, all values reported are in ng/L. "Non-detects" are included at the applicable PQL.*

TABLE 2-20. PROCESS STREAM METALS SUMMARY

Deactivation Furnace System Agent Trial Burn - Run 1

Run 1 Date: 7-Jan-97	Process Stream Concentrations					
	Scrubber Recirc. (Brine) mg/L	Process Water mg/L	Caustic (NaOH) mg/L	Stack Condensate mg/L	Heated Discharge Conveyor Ash mg/Kg	Cyclone Residue mg/Kg
Aluminum	< 238	< 0.10	9.0	< 0.10	80,900	114,000
Antimony	25.2	< 0.060	< 0.60	< 0.060	< 12.0	22.3
Arsenic	5.7	< 0.10	< 1.0	< 0.10	< 20.0	168
Barium	1.80	< 0.010	< 0.10	< 0.010	30.8	851
Beryllium	< 0.020	< 0.0020	< 0.020	< 0.0020	< 0.40	< 0.40
Boron	11.9	< 0.10	3.2	< 0.10	462	1,930
Cadmium	5.5	< 0.0050	< 0.050	< 0.0050	211	153
Chromium	3.8	< 0.010	< 0.10	< 0.010	148	384
Cobalt	0.23	< 0.010	< 0.10	< 0.010	14.5	28.8
Copper	3.2	< 0.020	< 0.20	< 0.020	891	2,050
Lead	492	< 0.050	< 0.50	< 0.050	245	11,700
Manganese	0.90	< 0.010	< 0.10	0.46	159	276
Mercury	< 0.002	< 0.00020	< 0.0020	< 0.00020	< 0.10	< 0.10
Nickel	2.7	< 0.040	< 0.40	< 0.040	46.6	521
Selenium	< 2.0	< 0.20	< 2.0	< 0.20	< 40.0	< 40.0
Silver	< 0.10	< 0.010	< 0.10	< 0.010	< 2.0	< 2.0
Thallium	< 20.0	< 2.0	< 20.0	< 2.0	< 400	< 400
Tin	< 1.0	< 0.10	< 1.0	< 0.10	< 20.0	< 20.0
Vanadium	0.34	< 0.010	0.26	< 0.010	11.7	29.0
Zinc	120	0.12	1.1	2.1	17,900	4,790

TCLP LEACHATE RESULTS

Run 1 Date: 7-Jan-97	Solid Process Stream Leachate Concentrations	
	Heated Discharge Conveyor Ash mg/L	Cyclone Residue mg/L
Arsenic	< 1.0	< 1.0
Barium	0.89	0.17
Cadmium	0.66	< 0.050
Chromium	< 0.10	0.19
Lead	< 0.50	< 0.50
Mercury	< 0.0020	< 0.0020
Selenium	< 1.0	< 1.0
Silver	< 0.10	< 0.10

TABLE 2-20. (Cont.) PROCESS STREAM METALS SUMMARY

Deactivation Furnace System Agent Trial Burn - Run 3

Run 3 Date: 10-Jan-97	Process Stream Concentrations					
	Scrubber Recirc. (Brine) mg/L	Process Water mg/L	Caustic (NaOH) mg/L	Stack Condensate mg/L	Heated Discharge Conveyor Ash mg/Kg	Cyclone Residue mg/Kg
Aluminum	< 265	< 0.10	9.5	< 0.10	66,100	105,000
Antimony	18.3	< 0.060	< 0.60	< 0.060	6.5	78.4
Arsenic	12.2	< 0.10	< 1.0	< 0.10	< 10.0	230
Barium	3.70	< 0.010	< 0.10	< 0.010	354	712
Beryllium	< 0.020	< 0.0020	< 0.020	< 0.0020	< 0.20	< 0.40
Boron	20.2	< 0.10	3.4	< 0.10	4,260	2,070
Cadmium	10.6	< 0.0050	< 0.050	0.0052	94.2	240
Chromium	4.0	< 0.010	< 0.10	< 0.010	69.5	497
Cobalt	0.33	< 0.010	< 0.10	< 0.010	86.9	34.5
Copper	4.1	< 0.020	1.2	< 0.020	611	1,820
Lead	1020	< 0.050	< 0.50	< 0.050	119	16,700
Manganese	0.97	< 0.010	< 0.10	0.77	65.1	347
Mercury	< 0.002	< 0.00020	< 0.0020	< 0.00020	< 0.10	< 0.10
Nickel	2.4	< 0.040	< 0.40	< 0.040	35.0	548
Selenium	< 2.0	< 0.20	< 2.0	< 0.20	< 20.0	< 40.0
Silver	< 0.10	< 0.010	< 0.10	< 0.010	< 1.0	2.5
Thallium	< 20.0	< 2.0	< 20.0	< 2.0	< 200	< 400
Tin	< 1.0	< 0.10	< 1.0	< 0.10	12.0	< 20.0
Vanadium	0.38	< 0.010	0.30	< 0.010	27.4	35.9
Zinc	287	2.3	1.2	4.1	964	4,880

TCLP LEACHATE RESULTS

Run 3 Date: 10-Jan-97	Solid Process Stream Leachate Concentrations	
	Heated Discharge Conveyor Ash mg/L	Cyclone Residue mg/L
Arsenic	< 1.0	< 1.0
Barium	9.3	0.22
Cadmium	4.1	0.35
Chromium	< 0.10	2.90
Lead	< 0.50	< 0.50
Mercury	< 0.0020	< 0.0020
Selenium	< 1.0	< 1.0
Silver	< 0.10	< 0.10

TABLE 2-20. (Cont.) PROCESS STREAM METALS SUMMARY

Deactivation Furnace System Agent Trial Burn - Run 4

Run 4 Date: 11-Jan-97	Process Stream Concentrations					
	Scrubber Recirc. (Brine) mg/L	Process Water mg/L	Caustic (NaOH) mg/L	Stack Condensate mg/L	Heated Discharge Conveyor Ash mg/Kg	Cyclone Residue mg/Kg
Aluminum	< 399	< 0.10	9.7	< 0.10	83,000	128,000
Antimony	18.4	< 0.060	< 0.60	< 0.060	6.0	137
Arsenic	15.5	< 0.10	< 1.0	< 0.10	11.7	180
Barium	6.30	< 0.010	< 0.10	< 0.010	622	1,310
Beryllium	< 0.020	< 0.0020	< 0.020	< 0.0020	< 0.20	< 0.40
Boron	24.5	< 0.10	3.5	< 0.10	2,700	2,470
Cadmium	13.4	< 0.0050	< 0.050	< 0.0053	106	207
Chromium	6.0	< 0.010	< 0.10	< 0.010	102	526
Cobalt	0.41	< 0.010	< 0.10	< 0.010	25.4	40.0
Copper	5.5	< 0.020	< 0.20	< 0.020	1,700	2,210
Lead	1290	< 0.050	0.71	< 0.050	233	13,300
Manganese	1.50	< 0.010	< 0.10	0.76	156	320
Mercury	< 0.002	< 0.00020	< 0.0020	< 0.00020	< 0.10	< 0.10
Nickel	4.1	< 0.040	< 0.40	< 0.040	111	1,090
Selenium	< 2.0	< 0.20	< 2.0	< 0.20	< 20.0	< 40.0
Silver	< 0.10	< 0.010	< 0.10	< 0.010	< 1.0	< 2.6
Thallium	< 20.0	< 2.0	< 20.0	< 2.0	< 200	< 400
Tin	< 1.0	< 0.10	< 1.0	< 0.10	24.3	< 20.0
Vanadium	0.46	< 0.010	0.30	< 0.010	14.5	31.4
Zinc	358	2.9	1.3	4.9	4,830	5,630

TCLP LEACHATE RESULTS

Run 4 Date: 11-Jan-97	Solid Process Stream Leachate Concentrations	
	Heated Discharge Conveyor Ash mg/L	Cyclone Residue mg/L
Arsenic	< 1.0	< 1.0
Barium	4.1	0.40
Cadmium	1.8	< 0.050
Chromium	< 0.10	0.74
Lead	< 0.50	< 0.50
Mercury	< 0.0020	< 0.0020
Selenium	< 1.0	< 1.0
Silver	< 0.10	< 0.10

TABLE 2-20. (Cont.) PROCESS STREAM METALS SUMMARY

Deactivation Furnace System Agent Trial Burn - Three Run Average

Runs 1, 3, 4 Date: 7, 10, 11-Jan-97	Process Stream Concentrations					
	Scrubber Recirc. (Brine) mg/L	Process Water mg/L	Caustic (NaOH) mg/L	Stack Condensate mg/L	Heated Discharge Conveyor Ash mg/Kg	Cyclone Residue mg/Kg
Aluminum	< 301	< 0.10	9.4	< 0.10	76,667	115,667
Antimony	20.6	< 0.06	< 0.60	< 0.06	< 8.2	79.2
Arsenic	11.1	< 0.10	< 1.0	< 0.10	< 13.9	193
Barium	3.9	< 0.01	< 0.10	< 0.010	336	958
Beryllium	< 0.020	< 0.0020	< 0.020	< 0.0020	< 0.27	< 0.40
Boron	18.9	< 0.10	3.4	< 0.10	2,474	2,157
Cadmium	9.8	< 0.0050	< 0.050	< 0.0052	137	200
Chromium	4.6	< 0.010	< 0.10	< 0.010	107	469
Cobalt	0.32	< 0.010	< 0.10	< 0.010	42.3	34.4
Copper	4.3	< 0.020	< 0.53	< 0.020	1,067	2,027
Lead	934	< 0.050	< 0.57	< 0.050	199	13,900
Manganese	1.1	< 0.010	< 0.10	0.66	127	314
Mercury	< 0.0020	< 0.00020	< 0.0020	< 0.00020	< 0.10	< 0.10
Nickel	3.1	< 0.040	< 0.40	< 0.040	64.2	719.7
Selenium	< 2.0	< 0.20	< 2.0	< 0.20	< 26.7	< 40.0
Silver	< 0.10	< 0.010	< 0.10	< 0.010	< 1.3	< 2.4
Thallium	< 20.0	< 2.0	< 20.0	< 2.0	< 267	< 400
Tin	< 1.0	< 0.10	< 1.0	< 0.10	< 18.8	< 20.0
Vanadium	0.39	< 0.010	0.29	< 0.010	17.9	32.1
Zinc	255	1.8	1.2	3.7	7,898	5,100

TCLP LEACHATE RESULTS

Runs 1, 3, 4 Date: 7, 10, 11-Jan-97	Solid Process Stream Leachate Concentrations	
	Heated Discharge Conveyor Ash mg/L	Cyclone Residue mg/L
Arsenic	< 1.0	< 1.0
Barium	4.8	0.26
Cadmium	2.2	< 0.15
Chromium	< 0.10	1.3
Lead	< 0.50	< 0.50
Mercury	< 0.0020	< 0.0020
Selenium	< 1.0	< 1.0
Silver	< 0.10	< 0.10

3.0 PROCESS OPERATING CONDITIONS

In order to process the M55 Rockets, a number of Hazardous Waste Management Units (HWMUs) were required. These HWMUs are as follows:

- Spent Decontamination Holding Tank System,
- Agent Collection System (ACS),
- Liquid Incineration (LIC1 or LIC2) and Pollution Abatement System (PAS),
- Heating Ventilation and Air Conditioning System,
- Container Handling Building,
- Rocket Shear Machine (RSM), and
- Deactivation Furnace System (DFS)
- DFS PAS.

For the purpose of this report, only the operation of the DFS and PAS will be discussed. Discussions on the operation of the other HWMUs can be found in Section D-7a of the DFS GB ATB Plan - Revision 2, dated December 12, 1996.

3.1 DEACTIVATION FURNACE AND POLLUTION ABATEMENT SYSTEM

The DFS is designed to incinerate residual chemical agent and energetic components separated from demilitarized munitions such as rockets, projectiles, and mines. For this agent trial burn, GB filled M55 Rockets were used as feed.

The DFS consists of three major components:

1. Rotary Kiln System (Primary Combustion Chamber (PCC)),
2. Cyclone, and
3. Afterburner (AFB)

3.1.1 Rotary Kiln System (Primary Combustion Chamber)

The rotary kiln (primary combustion) system consists of two feed chutes, a furnace kiln, a HDC, and a blast enclosure.

Prior to being sent to the DFS, the M55 rockets were processed by the RSM in the Explosive Containment Room. The sheared (8 pieces) M55 rockets were fed to the blast gate valves, prior to entering the kiln through the charge end subassembly. The sheared pieces of the M55 rocket moved through the kiln where the residual organic chemicals and energetic components were thermally destroyed. At the discharge end of the kiln, ash and scrap metal were transferred to the HDC.

3.1.2 Cyclone

The cyclone acts as an inertial collector for large particulates found in the gas stream. Prior to entering the cyclone, the combustion gas traveled through the Blast Attenuation Duct and was quenched by a series of water sprays to a satisfactory operating temperature. The cooled gas stream entered the cyclone tangentially, initiating a swirling action resulting in particle removal by inertial impaction.

Separated particulate was collected in a sealed container positioned at the bottom of the cyclone, while clean combustion gas left the cyclone and entered the afterburner.

3.1.3 Afterburner (AFB)

The AFB received the gases from the cyclone where two supplemental fuel burners and additional combustion air were provided to assure sufficient combustion of gaseous organic materials to meet DRE requirements. In order to reach the desired incineration of the contaminants, the gases were maintained at a prescribed temperature for a specified length of time. The gases exited the AFB and entered the PAS.

3.1.4 Pollution Abatement System

The gases entered the PAS from the AFB exit duct. The PAS consists of a quench tower, a venturi scrubber, scrubber tower, demister vessel, associated pumps and blowers, and outlet duct to a common stack.

The exhaust gas enters the quench tower, where it is contacted with an alkaline brine spray pumped by the quench brine pump from the scrubber tower reservoir. Water from the brine is evaporated into the gas, cooling the gas to its dew point. Brine is sprayed into the tower at a rate in excess of the maximum expected evaporation load. Water required to maintain the level in the scrubber tower reservoir is added to the quench. Gases exit the quench tower at approximately 200°F.

The exhaust gas from the quench tower enters the venturi scrubber where it again contacts the brine. The venturi scrubber has a variable throat controller which may be set in the range of 20 - 50 inches of water column pressure drop across the venturi scrubber throat. Brine flow is controlled to ensure efficient collection of particulates. Acid gases react with alkali in the brine to form salts. Sodium hydroxide (18% NaOH) is added to the brine as required to maintain a pH of 7 or above in the scrubber reservoir.

The two-phase effluent (gas and liquid) from the venturi scrubber enters the scrubber tower. The liquid falls to the tower reservoir while the gas rises through the chimneys of the clean liquor tray. Clean liquor is circulated from the liquid level of the clean liquor tray to the top

of the packing. This clean liquor is pH and density adjusted by adding sodium hydroxide solution and/or water. The rising gas is contacted with this scrubbing solution in the packed bed. Acid gases are absorbed by the solution and react with the alkali to form salts. Recirculation of solution is controlled to ensure adequate contact between liquid and gas at the maximum expected gas flow. Gas rising from the packed bed passes through the mist eliminator which coalesces liquid droplets and drains to the reservoir tray in the packed bed.

Excess clean liquor overflows the clean liquor tray through the chimneys and falls into the scrubber tower reservoir where it mixes with the brine solution and is circulated back to the venturi and quench. This brine is also pH and density adjusted with the addition of sodium hydroxide solution, water, and purging of concentrated liquid to one of the large brine holding tanks in the Brine Reduction Area (BRA) or hazardous waste tankers for offsite disposal, as described in the TOCDF Hazardous Waste Analysis Plan. This brine solution is a F999 waste and will be disposed to a Treatment, Storage, or Disposal Facility permitted for this type of waste.

The density is monitored in the pump discharge line for the brine loop and the clean liquor loop. The density meter generates a proportional signal. This signal is used to modulate the control valve to transfer a portion of the brine to the brine surge tanks or hazardous waste tanker. Water is added to the system to maintain the fluid level. As the density drops, the control valve closes. In the clean liquor loop, water is added to reduce the density. The fluid level rises and overflows the chimneys into the brine loop. The pH is controlled by adding 18% NaOH.

The scrubber tower overhead gas enters the demister vessel and passes through the demister where it removes the fine metal oxides, other entrained solids and droplets from the exhaust gas streams. This system is also equipped with a spare demister. Liquid accumulates in the vessel bottom and is pumped to the scrubber reservoir.

After the demister, the exhaust gas enters the induced draft fan. This fan controls the pressure inside the primary chamber. The pressure is sensed at the kiln and controlled to a negative pressure with respect to the DFS room. The pressure sensor modulates the damper on the suction side of the fan.

The exhaust gases exiting the two-staged fan are above atmospheric pressure as they enter the duct to the common stack. Ports in the duct exiting the blowers were used to collect samples and conduct analytical work.

3.2 PROCESS CONTROLS AND MONITORS

The process operating conditions were controlled by Programmable Logic Controllers (PLCs) and associated sensors and transmitters. The values of the operating parameters were electronically recorded at approximately 30-second intervals by the PDARS.

The Automatic Waste Feed Cut Offs (AWFCOs) were programed into the PLC for specific operating parameters according to limits specified in the RCRA Part B permit and the DFS ATB Plan. A compete AWFCO verification was performed on the DFS prior to the ATB.

3.2.1 PDARS Data Summary

Summary tables presenting PDARS data for the RCRA permit operating parameters are presented in Table 3-1. The summary table provides maximum, minimum, and average values recorded during the time elapsed between the initiation of and the completion of testing for each performance run. The ACAMS data is recorded by PDARS. The system only records ACAMS alarms. There were no ACAMS alarms during the DFS ATB therefore there is no ACAMS data in Table 3-1. The start and end times for each performance run are presented in Section 2.0, Table 2-2.

Complete PDARS data printouts are presented in Appendix D, Annex A. Trends in the process data are plotted by WinTrends in Appendix C.

3.2.2 Automatic Waste Feed Cutoffs

Every time a RCRA instrument exceeds its RCRA limit, an automatic waste feed cutoff (AWFCO) stops the feeding of waste to the system. The AWFCO alarms which occurred during the trial burn are summarized in Table 3-2. Most of the waste feed cutoffs were less than three minutes and sampling continued through those stop feeds. This was the case for the stop feeds in Run 1. In Run 2 there was one AWFCO with a duration of 4.6 minutes that interrupted sampling. As shown in Table 3-2 the exhaust gas differential pressure activated a high-high alarm. This is the exhaust gas velocity pressure which is used to measure the residence time in the afterburner.

During Run 4 there were three AWFCOs that caused sampling to be interrupted. One was for 7.4 minutes, another for 5.5 minutes and the third for 20.5 minutes. All three of these AWFCOs were caused by low-low kiln exhaust gas temperature. Sampling was stopped at 13:43 and did not resume until 14:48. The three AWFCOs took place during that time frame. Other temperature indicators showed that the temperature was not low which indicates that the thermocouple was malfunctioning. After the run was completed the thermocouple was changed.

TABLE 3-1. PDARS Data Summary (Page 1 of 3)

Parameter	RCRA Limit	PDARS Tag No.	Statistic	Run 1 Feed Time[a]	Run 3 Feed Time[b]	Run 4 Feed Time[c]
Pre-Quench Retort Exhaust Gas Temp. (°F)	> 950	16-TIT-182	Avg	1450	1476*	1450
			Max	1616	1553*	1573
			Min	1174	1150*	1084
Post-Quench Retort Exhaust Gas Temp. (°F)	850 < T < 1,650	16-TIC-008	Avg	1428	1471	1450
			Max	1550	1546	1561
			Min	1214	1164	1105
Heated Discharge Conveyor Temp., Bottom (°F)	> 1,000	16-TIT-042	Avg	1072	1089	1079
			Max	1091	1104	1110
			Min	1046	1058	1024
Heated Discharge Conveyor Temp., Top (°F)	> 1,000	16-TIT-184	Avg	1094	1097	1096
			Max	1121	1124	1129
			Min	1063	1063	1064
Retort Pressure (" wc)	< -0.1	16-PIC-018	Avg	-0.50	-0.50	-0.50
			Max	-0.24	-0.25	-0 18
			Min	-0.79	-0.78	-0.80
Retort Rotational Speed (rpm)	0.33 < rpm < 2.0	16-ZS-602	Avg	1.89	1.89	1.9
			Max	1.92	1.91	1.9
			Min	0.00**	0.42	1.9
Afterburner Exhaust Gas Temp. (°F)	,050 < T < 2,35	16-TIC-092	Avg	2151	2150	2149
			Max	2163	2162	2188
			Min	2136	2129	2137
Afterburner Exhaust Gas Velocity Head (" wc)	< 0.93	16-PDIT-813	Avg	0.75	0.59	0.59
			Max	0.88	0.92	0.84
			Min	0.61	0.36	0.31
Quench Brine Delivery Pressure (psig)	> 40	24-PIT-011	Avg	105	104	103
			Max	106	106	104
			Min	104	103	102
Quench Tower Exhaust Gas Temp. (°F)	< 225	24-TIT-374	Avg	173	172	172
			Max	175	175	173
			Min	170	171	170
Ventrui Scrubber Pressure Drop (" wc)	> 20	24-PDIC-008	Avg	29.9	30.4	30.3
			Max	32.7	34.0	33.2
			Min	27.8	24.7	23.0
Venturi Scurbber Brine Feed (gpm)	> 300	24-FIC-006	Avg	325	325	325
			Max	330	333	330
			Min	304	303	309
Scrubber Tower Clean Liquor Feed (gpm)	> 360	24-FIC-030	Avg	1000	1000	1000
			Max	1026	1011	1014
			Min	986	990	988

TABLE 3-1. PDARS Data Summary (Page 2 of 3)

Parameter	RCRA Limit	PDARS Tag No.	Statistic	Run 1 Feed Time[a]	Run 3 Feed Time[b]	Run 4 Feed Time[c]
Scrubber Clean Liquor Delivery Pressure (psig)	> 15	42-PIT-036	Avg	45	46	45
			Max	46	46	46
			Min	44	45	45
Quench Brine pH	> 7.0	24-AIC-007	Avg	9.0	9.1	9.0
			Max	9.1	9.2	9.1
			Min	8.9	9.0	9.0
Quench Brine Density (sgu)	< 1.28	24-DIC-033	Avg	1.09	1.08	1.09
			Max	1.09	1.09	1.09
			Min	1.08	1.07	1.09
Exhaust Gas Hourly Ave. CO Concentration (ppm)	< 100	16-AIT-059H	Avg	8	7	7
			Max	8	8	7
			Min	7	7	5
Exhaust Gas Hourly Ave. CO Concentration (ppm)	< 100	24-AIT-207H	Avg	7	7	6
			Max	7	7	7
			Min	7	6	5
Exhaust Gas O_2 Concentration, Dry Basis (%O_2)	3 < % O_2 < 15	16-AIT-175	Avg	9.8	9.7	9.7
			Max	11.7	11.6	11.9
			Min	8.5	7.9	7.8
Exhaust Gas O_2 Concentration, Dry Basis (%O_2)	3 < % O_2 < 15	24-AIT-206	Avg	9.9	9.7	[illegible]
			Max	11.8	11.6	12.0
			Min	8.6	8.0	7.8
Clean Liquor pH	NA	24-AIC-034	Avg	8.6	8.5	8.5
			Max	8.8	8.7	8.6
			Min	8.4	8.4	8.4
Residence Time (sec.)	≥ 2.0	16-KI-813	Avg	2.3	2.6	2.7
			Max	2.6	3.5	3.8
			Min	2.1	2.0	2.1
Agent Hourly Rolling Ave. Feed Rate (lbs./hr.)	< 20.3	DFSAGENT	Avg	12.1	8.85	7.90
			Max	18.2	13.20	12.20
			Min	8.2	2.60	0.50
Agent Feed Rate (lbs. agent each hr.)	< 20.3	NA	Avg	10.8	8.6	7.6
			Max	13.9	11.3	11.3
			Min	5.0	5.4	4.3
Rocket Hourly Ave. Feed Rate (rkts. each hr.)	< 38	NA	Avg	32	33	31
			Max	38	37	37
			Min	23	14	17

TABLE 3-1. PDARS Data Summary (Page 3 of 3)

Parameter	RCRA Limit	PDARS Tag No.	Statistic	Run 1 Feed Time[a]	Run 3 Feed Time[b]	Run 4 Feed Time[c]

Footnotes

[a] Based on Rocket Feed Time period 08:31 to 15:57, 7 January 1997.

[b] Based on Rocket Feed Time period 08:40 to 14:14 and 15:37 to 17:32, 10 January 1997.
PDAR System data collected during rocket feed interruption occuring between 14:14 to 15:37 not included in determination.

[c] Based on Rocket Feed Time period 08:30 to 13:33 and 14:30 to 16:23, 11 January 1997.
PDAR System data collected during rocket feed interruption occuring between 13:33 to 14:30 not included in determination.

* Determined from PDAR System data generated by 16-TIT-244. The thermocouple associated with 16-TIT-182 failed during Run 3. 16-TIT-244 is the redundant thermocouple/transmitter to 16-TIT-182.

**Kiln rotation stopped when waste feed was stopped from 13:56 to 13:58.

TABLE CODE KEY

NA = Not Applicable

Source: PDARS Data, Appendix D.

TABLE 3-2. DFS GB ATB AUTOMATIC WASTE FEED CUT-OFFS
PERFORMANCE RUN 1
07- JAN-97
TOTAL EXHAUST GAS SAMPLING WINDOW 08:31 - 16:57

TAG NAME	TAG DESCRIPTION	ALARM TEXT	TIME IN	TIME OUT	MINUTES
16-XS-209	MMS-CHUT-102 ECR LINE B	JAM	7-Jan-97 11:39:09	7-Jan-97 11:39:48	0.6
16-PDAH-813	EXHAUST GAS DIFF PRESS	PRESSURE HI-HI	7-Jan-97 12:34:29	7-Jan-97 12:35:12	0.7
16-SSL-057	DFS-CNVX-101 DFS HDC CONVEYOR	MALFUNCTION	7-Jan-97 13:56:11	7-Jan-97 13:57:06	0.9
16-PDAH-813	EXHAUST GAS DIFF PRESS	PRESSURE HI-HI	7-Jan-97 16:46:13	7-Jan-97 16:46:58	0.7
16-PDAH-813	EXHAUST GAS DIFF PRESS	PRESSURE HI-HI	7-Jan-97 16:54:11	7-Jan-97 16:55:01	0.8

TABLE 3-2. (Cont.) DFS ATB AUTOMATIC WASTE FEED CUT-OFFS
PERFORMANCE RUN 3
10-JAN-97
TOTAL EXHAUST GAS SAMPLING WINDOW 08:40 - 17:32

TAG NAME	TAG DESCRIPTION	ALARM TEXT	TIME IN	TIME OUT	MINUTES
16-PDAH-813	EXHAUST GAS DIFF PRESS	PRESSURE HI-HI	10-Jan-97 9:23:46	10-Jan-97 9:25:01	1.2
16-PDAH-813	EXHAUST GAS DIFF PRESS	PRESSURE HI-HI	10-Jan-97 9:28:25	10-Jan-97 9:29:08	0.7
16-PDAH-813	EXHAUST GAS DIFF PRESS	PRESSURE HI-HI	10-Jan-97 9:30:46	10-Jan-97 9:31:12	0.4
16-PDAH-813	EXHAUST GAS DIFF PRESS	PRESSURE HI-HI	10-Jan-97 9:33:01	10-Jan-97 9:33:52	0.8
16-SSL-057	DFS-CNVX-101 DFS HDC CONVEYOR	MALFUNCTION	10-Jan-97 10:21:17	10-Jan-97 10:21:53	0.6
16-PDAH-813	EXHAUST GAS DIFF PRESS	PRESSURE HI-HI	10-Jan-97 14:14:38	10-Jan-97 14:19:12	4.6

TABLE 3-2. (Cont.) DFS GB ATB AUTOMATIC WASTE FEED CUT-OFFS
PERFORMANCE RUN 4
11-JAN-97
TOTAL EXHAUST GAS SAMPLING WINDOW 08:30 - 16:23

TAG NAME	TAG DESCRIPTION	ALARM TEXT	TIME IN	TIME OUT	MINUTES
16-XS-208	DFS-CHUTE-101 ECR LINE A	JAM	11-Jan-97 12:30:15	11-Jan-97 12:30:27	0.2
16-XS-208	DFS-CHUTE-101 ECR LINE A	JAM	11-Jan-97 12:34:34	11-Jan-97 12:34:53	0.3
16-XS-208	DFS-CHUTE-101 ECR LINE A	JAM	11-Jan-97 13:05:28	11-Jan-97 13:05:43	0.2
16-PDAH-813	EXHAUST GAS DIFF PRESS	PRESSURE HI-HI	11-Jan-97 13:33:57	11-Jan-97 13:35:45	1.8
16-TALL-008	DFS-FURN-101 KILN EXHAUST GAS	TEMP LO-LO	11-Jan-97 13:34:05	11-Jan-97 13:35:45	1.7
16-TALL-008	DFS-FURN-101 KILN EXHAUST GAS	TEMP LO-LO	11-Jan-97 13:36:24	11-Jan-97 13:43:47	7.4
16-PDAH-813	EXHAUST GAS DIFF PRESS	PRESSURE HI-HI	11-Jan-97 13:41:14	11-Jan-97 13:41:27	0.2
16-PDAH-813	EXHAUST GAS DIFF PRESS	PRESSURE HI-HI	11-Jan-97 13:41:46	11-Jan-97 13:43:04	1.3
16-PDAH-813	EXHAUST GAS DIFF PRESS	PRESSURE HI-HI	11-Jan-97 13:43:52	11-Jan-97 13:46:54	3
16-TALL-008	DFS-FURN-101 KILN EXHAUST GAS	TEMP LO-LO	11-Jan-97 13:44:11	11-Jan-97 13:46:54	2.7
16-TAHH-008	DFS-FURN-101 RETORT EXHAUST	TEMP HI-HI	11-Jan-97 13:47:06	11-Jan-97 13:47:21	0.2
16-TALL-008	DFS-FURN-101 KILN EXHAUST GAS	TEMP LO-LO	11-Jan-97 13:47:11	11-Jan-97 13:47:26	0.2
16-TALL-008	DFS-FURN-101 KILN EXHAUST GAS	TEMP LO-LO	11-Jan-97 13:47:28	11-Jan-97 13:47:38	0.2
16-PDAH-813	EXHAUST GAS DIFF PRESS	PRESSURE HI-HI	11-Jan-97 13:48:36	11-Jan-97 13:50:49	2.2
16-TALL-008	DFS-FURN-101 KILN EXHAUST GAS	TEMP LO-LO	11-Jan-97 13:50:21	11-Jan-97 14:10:49	20.5
16-ZS-602	DFS-FURN-101 KILN MOTION	ALARM	11-Jan-97 13:58:51	11-Jan-97 13:58:56	0.1
16-TALL-008	DFS-FURN-101 KILN EXHAUST GAS	TEMP LO-LO	11-Jan-97 14:14:35	11-Jan-97 14:20:07	5.5
16-TALL-008	DFS-FURN-101 KILN EXHAUST GAS	TEMP LO-LO	11-Jan-97 14:24:10	11-Jan-97 14:25:38	1.5
16-XS-208	DFS-CHUTE-101 ECR LINE A	JAM	11-Jan-97 14:50:25	11-Jan-97 14:50:35	0.2
16-XS-208	DFS-CHUTE-101 ECR LINE A	JAM	11-Jan-97 15:53:27	11-Jan-97 15:53:44	0.3

4.0 EXHAUST GAS AND PROCESS STREAM SAMPLING PROCEDURES

This section describes the exhaust gas and process stream sampling procedures which were performed during the DFS ATB. Throughout the ATB, TRC utilized EPA-approved sampling procedures as presented in the "*GB Agent Trial Burn Plan For The Deactivation Furnace System (DFS) dated June 6, 1996 as revised on December 12, 1996*". Modifications, departures, exceptions, and or exclusions from these sampling procedures will be presented in the following subsections.

4.1 DFS EXHAUST DUCT SAMPLING

Sampling of the DFS exhaust gases was performed on a horizontal duct downstream from the ID fan leading from the DFS PAS to the common stack. This exhaust duct has an internal diameter of 45.5 inches. Figure 2-1 presents a schematic of the DFS exhaust duct showing the location of the ports. The parameters measured at this location included Agent GB, CO_2, CO, O_2, PCBs, PICs, total organic compounds, energetic materials, metal emissions, particulate emissions, HCl, and HF.

Table 4-1 presents exhaust gas sampling information. Table 4-2 presents the DFS exhaust duct traverse sampling points.

4.1.1 M1/M2 - Velocity Measurements and Cyclonic Flow

Velocity traverses were conducted at the DFS sampling location with an S-type pitot assembly in accordance with EPA Reference Methods 1 and 2. An S-type pitot tube with an attached inclined manometer was used to measure the gas velocities. An attached Type-K thermocouple with remote digital display was used to determine the exhaust gas temperature. During the test program, velocity measurements were conducted during each performance run at the sampling location.

In accordance with EPA Method 1, TRC conducted a 24-point traverse (12 points on each diameter) with each isokinetic sampling train during each performance run.

A cyclonic flow check was conducted at the sampling locations (Ports N1, N2, I, and J) on November 13 and December 12, 1996, respectively, in accordance with Section 2.4 of EPA Method 1. This procedure is referred to as the nulling technique. An S-type pitot tube connected to an inclined manometer was used in this method. The pitot tube was positioned at each traverse point so that the face openings of the pitot tube were perpendicular to the stack cross-sectional plane. This position was called the "0° reference". The velocity pressure (ΔP) measurement was noted. If the ΔP reading was zero, the cyclonic angle was recorded as 0°. If the ΔP reading was not zero, the pitot tube was rotated clockwise or counterclockwise until the ΔP reading became zero. This angle was then measured with a leveled protractor and

TABLE 4-1. EXHAUST GAS SAMPLING SUMMARY

SAMPLING TRAIN	ANALYSES PERFORMED	SAMPLING METHOD REFERENCE	PORT LOCATION
M0030 VOST	Volatile Organic Compounds (VOCs)	SW-846 - Method 0030	Port N5
M0040 TOC	Volatile Total Organic Compounds (TOC)	SW-846 - Method 0040	Port K
ACAMS	Agent	TE-LOP-524	See Fig. 2-1
DAAMS	Agent	TE-LOP-522	Same as ACAMS
M1	Sampling Traverse Points	40 CFR 60 - Method 1	Each Port
M2	Exhaust Gas Velocity	40 CFR 60 - Method 2	Isokinetic Trains
M3	O_2 and CO_2	40 CFR 60 - Method 3	Isokinetic Trains
M4	Exhaust Gas Moisture	40 CFR 60 - Method 4	Isokinetic Trains
M0050	HCl, HF, and PM	40 CFR 266 Appendix IX - Section 3.3.1	Ports I,J
M0010	Semi-volatile Organic Compounds (SVOCs)	SW-846 - Method 0010	Ports G, H
M0023A	PCDDs/PCDFs	SW-846 - Method 0023A	Ports N3, N4
M23 PCBs	Total PCBs and Coplanar PCBs	40 CFR 266 Appendix IX - Section 3.4	Ports N3, N4
M0010-SVTOC	Semi-volatile TOC	SW-846 - Method 0010	Ports G, H
STEM	Energetic Materials	SW-846 - Method 0010	Ports I, J
MULTI-METALS	HRA Metals and Phosphorus	40 CFR 266 Appendix IX - Section 3.1	Ports I, J
MCr^{+6}	Hexavalent Chromium	40 CFR 266 Appendix IX - Section 3.2	Ports I, J
CEMS	CO	40 CFR 60 - Method 10	CEMS Duct Port

TABLE 4-2. DFS EXHAUST DUCT TRAVERSE SAMPLING POINTS

POINT	PERCENT OF STACK DIAMETER	DISTANCE FROM WALL (in.)
1	2.1	0.96
2	6.7	3.05
3	11.8	5.37
4	17.7	8.05
5	25.0	11.38
6	35.6	16.20
7	64.4	29.30
8	75.0	34.13
9	82.3	37.45
10	88.2	40.13
11	93.3	42.45
12	97.9	44.54

reported to the nearest degree. After this null technique was applied at each traverse point, the average of the cyclonic angles was calculated. If this average was less than 20°, the flow condition was acceptable to test. This check was performed at the sampling locations before testing. All of the sampling ports were found to be acceptable for testing. Data on the cyclonic flow checks is found in Appendix B, Annex F.

4.1.2 M4 - Moisture Determination

Moisture was determined for each performance run according to 40 CFR 60, Appendix A, Method 4, "*Determination of Moisture Content in Stack Gases*". The principle of this method is to remove the moisture from the sample stream and determine the moisture either volumetrically or gravimetrically. Method 4 was used in conjunction with the M0010, M23, M0023A, M0050, Multi-Metal, and Cr^{+6} sampling trains for the determination of moisture at the DFS sampling location.

4.1.3 M0050 - Particulate Matter/Hydrogen Chloride/Hydrogen Fluoride

Particulate matter, hydrogen chloride, and hydrogen fluoride concentrations were determined according to 40 CFR 266, Appendix IX, Section 3.3.1. Sampling was conducted at Ports I and J on the DFS exhaust duct.

Leak checks of the entire Method 0050 sampling train were performed before and after each sampling run and during port changes. All leak checks and leakage rates were documented on the relevant field test data sheets.

Sample recovery sequence for the Method 0050 sample train was as follows:

- Rinse of probe, nozzle, and heated sampling line (connection between probe and heated filter) was conducted at sampling location.
- Remainder of sampling train transported to the recovery area.
- Physical condition of the sample train was noted (i.e., filter condition, impinger contents color, silica gel color, etc.).
- Disassembled the filter housing and transferred the filter to its original petri dish. Sealed the container with Teflon® tape and labeled it with the appropriate sample information.
- Weighed the contents of the first three impingers for weight gain and transferred the sample to an amber glass container with a Teflon®-lined cap. Rinsed all glassware three times with distilled deionized water into the same sample container. The container was sealed and labeled.
- The silica gel impinger was weighed to obtain a weight gain.
- All containers were checked to ensure proper sealing, proper labeling, and that all liquid levels were marked.
- All samples were logged onto a chain-of-custody form.

The filter and front-half acetone rinse were used to determine particulate matter concentrations. The 0.1N H_2SO_4 impinger catches (impingers 1 thru 3) were used to determine concentrations of hydrogen chloride, hydrogen fluoride, and moisture.

4.1.4 M0030 - Volatile Organic Compounds

The VOST was used to determine the emission rates of volatile products of incomplete combustion (PICs) in the DFS exhaust gas. VOST procedures and QA/QC requirements as described in Method 0030 of SW-846, 3rd Edition and the "*Protocol for the Collection and Analysis of Volatile POHCs Using VOST*" (EPA 600/8-85-003) were followed. Sampling was conducted at Port N5 on the DFS exhaust duct.

The sampling system was a non-isokinetic sampling train in which the flow rates are predetermined based on desired run times. Twenty liters were collected through a pair of traps at a flow rate of 1.0 liter/minute. Six pairs of traps and one condensate sample were collected during each performance run. Each pair of traps consisted of a Tenax® front tube and a Tenax®/charcoal back tube. In addition, moisture contained in the exhaust gas was condensed and collected during sampling in a condensate trap located between the traps. When all six samples were collected, the collected condensate was recovered by slowly pouring 40 ml into a zero-headspace 40 ml VOA vial. The additional collected condensate was volumetrically measured and added to the 40 ml to obtain a total collected condensate volume.

One field blank sample, consisting of a pair of tubes as described above, was collected for each performance run. The procedure for collection of this field blank requires the sampling technician to first uncap the field blank tubes. These tubes remain uncapped for the duration of time required to recover the just completed sample and install a pair for the next sample.

4.1.5 M0010 - Semi-Volatile Organic Compounds

To determine the emission rates of semi-volatile organic compounds in the DFS exhaust gas, the procedures described in Method 0010 of SW-846, 3rd Edition "*Modified Method 5 Sampling Train*", were followed. Sampling was conducted at Ports G and H on the DFS exhaust duct.

Sampling was isokinetic (± 10 percent) with readings of exhaust gas parameters recorded three times (every 5 minutes during the 15 minute sampling time) at every sampling point during the traverse.

Leak checks of the entire Method 0010 sampling train were performed before and after each sampling run, during port changes, and any time required to document the integrity of the sampling train (i.e. troubleshoot of sampling train due to high vacuum or XAD® trap freezing). All leak checks and leakage rates were documented on the relevant field test data sheets.

Sample recovery sequence for the Method 0010 sample train was as follows:

- Rinse of probe, nozzle, and heated sampling line (connection between probe and heated filter) was conducted at sampling location. These components were brush-rinsed three times with methanol/methylene chloride into an amber glass container with a Teflon®-lined cap.

- Remainder of sampling train was transported to the recovery area.

- Physical condition of the sample train was noted (i.e., filter condition, impinger contents color, silica gel color, etc.).

- Disassembled the filter housing and transferred the filter to its original petri dish with hexane rinsed forceps. Sealed the container with Teflon® tape and labeled it with the appropriate sample information.

- The XAD-2® resin sorbent module was sealed at both ends with Teflon® tape and aluminum foil. The entire sorbent module was then wrapped in aluminum foil and labeled.

- The front-half filter housing was brush-rinsed three times with methanol/methylene chloride into the same amber glass container which was used to collect the probe, nozzle, and heat traced line rinse.

- The contents of the first impinger was weighed for weight gain and transferred to a precleaned amber glass container. The container was sealed and labeled.

- The contents of the second and third impingers were weighed for weight gain and transferred to a precleaned amber glass container. The container was sealed and labeled.

- The back-half filter housing, condenser module, impingers, and U-tubes, were brush-rinsed three times with methanol/methylene chloride into an amber glass container with a Teflon®-lined cap. The container was sealed and labeled.

- The silica gel impinger was weighed to obtain a weight gain.

- All containers were checked to ensure proper sealing, proper labeling, and that all liquid levels were marked.

- All samples were logged onto the chain-of-custody record and transferred to the on-site refrigeration unit to maintain a 4°C storage.

4.1.6 M0010 - Semi-Volatile and Non-Volatile Total Organic Compounds

To determine the emission rates of total organic compounds with a boiling point greater than 100°C in the DFS exhaust gas, the procedures described in Method 0010 of SW-846, 3rd Edition "*Modified Method 5 Sampling Train*", were followed. Sampling was conducted at Ports G and H on the DFS exhaust duct.

Sampling was isokinetic (± 10 percent) with readings of exhaust gas parameters recorded three times (every 5 minutes during the 15 minute sampling time) at every sampling point during the traverse.

Leak checks of the entire Method 0010 sampling train were performed before and after each sampling run, during port changes, and any time required to document the integrity of the sampling train (i.e. troubleshoot of sampling train due to high vacuum or XAD® trap freezing). All leak checks and leakage rates were documented on the relevant field test data sheets.

Sample recovery sequence for the Method 0010 sample train was as follows:

- Rinse of probe, nozzle, and heated sampling line (connection between probe and heated filter) was conducted at the sampling location. These components were brush-rinsed three times with methanol/methylene chloride into an amber glass container with a Teflon®-lined cap.

- Remainder of sampling train was transported to the recovery area.

- Physical condition of the sample train was noted (i.e., filter condition, impinger contents color, silica gel color, etc.).

- Disassembled the filter housing and transferred the filter to its original petri dish with hexane rinsed forceps. Sealed the container with Teflon® tape and labeled it with the appropriate sample information.

- The XAD-2® resin sorbent module was sealed at both ends with Teflon® tape and aluminum foil. The entire sorbent module was then wrapped in aluminum foil and labeled.

- The front-half filter housing was brush-rinsed three times with methanol/methylene chloride into the same amber glass container which was used to collect the probe, nozzle, and heat traced line rinse.

- The contents of the first impinger was weighed for weight gain and transferred to a precleaned amber glass container. The container was sealed and labeled.

- The contents of the second and third impingers were weighed for weight gain and transferred to a precleaned amber glass container. The container was sealed and labeled.

- The back-half filter housing, condenser module, impingers, and U-tubes, were brush-rinsed three times with methanol/methylene chloride into an amber glass container with a Teflon®-lined cap. The container was sealed and labeled.

- The silica gel impinger was weighed to obtain a weight gain.

- All containers were checked to ensure proper sealing, proper labeling, and that all liquid levels were marked.

- All samples were logged onto the chain-of-custody record and transferred to the on-site refrigeration unit to maintain a 4°C storage.

4.1.7 M0040 - Volatile Total Organic Compounds

A sampling train in accordance with "Guidance of Total Organics", EPA/600/R-96/033, March 1996, was used to measure and determine the concentrations and emission rates of the VTOCs in the DFS exhaust gas. Sampling was conducted at Port K on the DFS exhaust duct.

This procedure defines the field gas chromatographic analysis of gaseous stationary source emissions sampled into a Tedlar® bag for C_1 - C_8 hydrocarbons, a chromatographic elution range defining organic compounds boiling in the range of -160°C to 126°C.

Leak checks of the entire Method 0040 sampling train were performed before and after each sampling run. All leak checks and leakage rates were documented on the relevant field test data sheets.

Following the completion of each performance run, the Method 0040 train was recovered at the sampling location. The sample recovery sequence was as follows:

- Recorded the final volume from the dry gas meter box.

- Noted the condition of the train (i.e., filter condition, condensate contents color, etc.).

- Disassembled the filter housing and replaced the filter with a new filter for the next run.

- Removed the condensate trap, the condenser and the sample line (from the trap to the bag) from the sample train. Poured the contents of the condensate trap into a clean graduated cylinder and recorded same.

- Rinsed the condenser, the condensate trap, and the sample line three times with 10 mL of organic-free water and added the rinses to the graduated cylinder. Recorded the final volume of the condensate and rinse mixture.

- Transferred the contents of the graduated cylinder into a 20 mL glass VOA vial with a Teflon® septum screw cap. The vial contained zero void volume. Excess condensate was discarded properly.

- All sample containers were checked to ensure proper sealing, proper labeling, and that all liquid levels were marked. All samples were logged onto the chain-of-custody record.

4.1.8 M0023A - PCDDs/PCDFs

A sampling train in accordance with EPA Method 0023A, "*Sampling Method for Polychlorinated Dibenzo-p-Dioxins and Polychlorinated Dibenzofurans Emissions from Stationary Sources*", SW-846, 3rd Edition, was used to measure and determine the concentrations and emission rates of PCDDs/PCDFs in the DFS exhaust gas. Sampling was conducted at Ports N3 and N4 on the DFS exhaust duct.

Sampling was isokinetic (± 10 percent) with readings of exhaust gas parameters recorded three times (every 5 minutes during the 15 minute sampling time) at every sampling point during the traverse.

Leak checks of the entire Method 0023A sampling train were performed before and after each sampling run, during port changes, and any time required to document the integrity of the sampling train (i.e. troubleshoot of sampling train due to high vacuum or XAD® trap freezing). All leak checks and leakage rates were documented on the relevant field test data sheets.

Sample recovery sequence for the Method 0023A sample train was as follows:

- Rinse of probe, nozzle, and heated sampling line (connection between probe and heated filter) was conducted at sampling location. These components were brush-rinsed three times with acetone. This was followed by a rinse of methylene chloride three times into the same amber glass container with a Teflon®-lined cap.

- Remainder of sampling train was transported to the recovery area.

- Physical condition of the sample train was noted (i.e., filter condition, impinger contents color, silica gel color, etc.).

- Disassembled the filter housing and transferred the filter to its original petri dish with hexane rinsed forceps. Sealed the container with Teflon® tape and labeled it with the appropriate sample information.

- The XAD-2® resin sorbent module was sealed at both ends with Teflon® tape and aluminum foil. The entire sorbent module was then wrapped in aluminum foil and labeled.

- The contents of the impingers were weighed for weight gain and discarded.

- The back-half filter housing, and condenser module were rinsed three times with acetone into an amber glass container with a Teflon®-lined cap. This was followed by a rinse of methylene chloride three times into the same amber glass container.

- All containers were checked to ensure proper sealing, proper labeling, and that all liquid levels were marked.

- All samples were logged onto the chain-of-custody record and transferred to the on-site refrigeration unit to maintain a 4°C storage

4.1.9 M23 - PCBs

A sampling train in accordance with 40 CFR 266, Appendix IX, Section 3.4, was used to measure and determine the concentrations and emission rates of polychlorinated biphenyls in the DFS exhaust gas. Sampling was conducted at Ports N3 and N4 on the DFS exhaust duct.

Sampling was isokinetic (± 10 percent) with readings of exhaust gas parameters recorded three times (every 5 minutes during the 15 minute sampling time) at every sampling point during the traverse.

Leak checks of the entire Method 23 sampling train were performed before and after each sampling run, during port changes, and any time required to document the integrity of the sampling train (i.e. troubleshoot of sampling train due to high vacuum or XAD® trap freezing). All leak checks and leakage rates were documented on the relevant field test data sheets.

Sample recovery sequence for the Method 23 sample train was as follows:

- Rinse of probe, nozzle, and heated sampling line (connection between probe and heated filter) was conducted at sampling location. These components were brush-rinsed three times with acetone. This was followed by a rinse of methylene chloride three times into the same amber glass container with a Teflon®-lined cap.

- Remainder of sampling train was transported to the recovery area.

- Physical condition of the sample train was noted (i.e., filter condition, impinger contents color, silica gel color, etc.).

- Disassembled the filter housing and transferred the filter to its original petri dish with hexane rinsed forceps. Sealed the container with Teflon® tape and labeled it with the appropriate sample information.

- The XAD-2® resin sorbent module was sealed at both ends with Teflon® tape and aluminum foil. The entire sorbent module was then wrapped in aluminum foil and labeled.

- The contents of the impingers were weighed for weight gain and discarded.

- The back-half filter housing, and condenser module were rinsed three times with acetone into an amber glass container with a Teflon®-lined cap. This was followed by a rinse of methylene chloride three times into the same amber glass container.

- All containers were checked to ensure proper sealing, proper labeling, and that all liquid levels were marked.

- All samples were logged onto the chain-of-custody record and transferred to the on-site refrigeration unit to maintain a 4°C storage

4.1.10 STEM - Energetic Compounds

The STEM was operated as described in "*Quality Assurance/Quality Control Plan for Sampling and Analysis of Stack Emissions for Energetic Compounds*", Revision 2, U.S. Army Environmental Hygiene Agency, Air Pollution Engineering Division, Aberdeen Proving Ground, Maryland, May 1988 with revisions in the USACHPPM letter dated November 22, 1996. The STEM was used to measure and determine the emission rates of nitroglycerin, RDX, and TNT. Sampling was conducted at Ports I and J on the DFS exhaust duct.

Sampling was isokinetic (± 10 percent) with readings of exhaust gas parameters recorded every 5 minutes at every sampling point during the traverse.

Leak checks of the entire STEM were performed before and after each sampling run and during port changes. All leak checks and leakage rates were documented on the relevant field test data sheets.

Following the completion of each performance run, the STEM was transported to a recovery area on-site. The sample recovery procedures for the STEM were extensive and are shown by flow chart format in Figures 4-1, 4-2, 4-3, and 4-4.

4.1.11 Multiple Metals and Phosphorus

A sampling train prepared and operated according to 40 CFR Part 266, Appendix IX, Section 3.1 was used to determine the emission levels of selected metals and phosphorus in the DFS exhaust gas. Sampling was conducted at Ports I and J on the DFS exhaust duct.

Sampling was isokinetic (± 10 percent) with readings of exhaust gas parameters recorded every 5 minutes at every sampling point during the traverse.

Leak checks of the entire Multi-Metals sampling train were performed before and after each sampling run and during port changes. All leak checks and leakage rates were documented on the relevant field test data sheets.

Sample recovery sequence for the Multi-Metals sampling train was as follows:

- Rinse of probe, nozzle, and heated sampling line (connection between probe and heated filter) was conducted at sampling location. These components were brush-rinsed with 100 mL of 0.1N nitric acid into an amber glass container with a Teflon®-lined cap. The container was sealed and labeled.

- Remainder of sampling train was transported to the recovery area.

- Physical condition of the sample train was noted (i.e., filter condition, impinger contents color, silica gel color, etc.).

- Disassembled the filter housing and transferred the filter to its original petri dish. Sealed the petri dish with Teflon® tape and labeled it with the appropriate sample information.

Figure 4-1. STEM Front Section Recovery

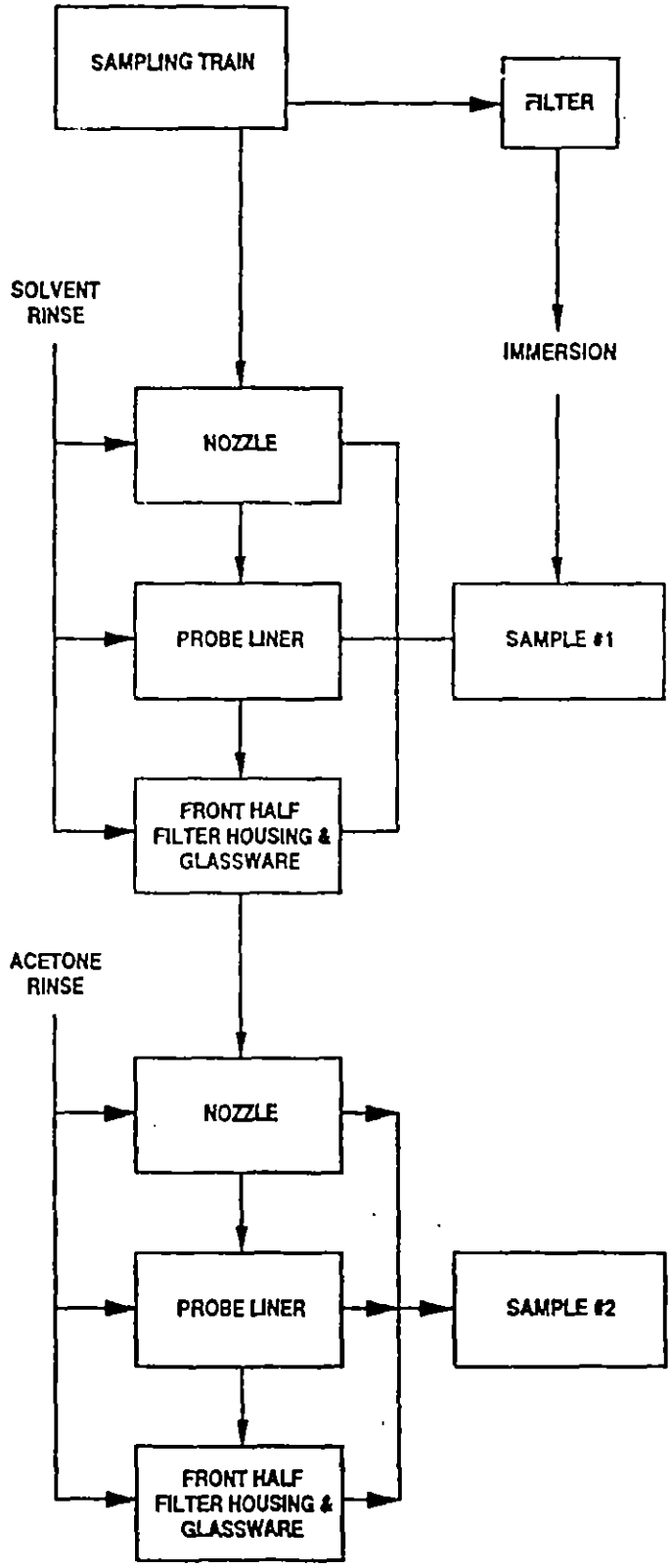

Figure 4-2. STEM Impinger Section Recovery

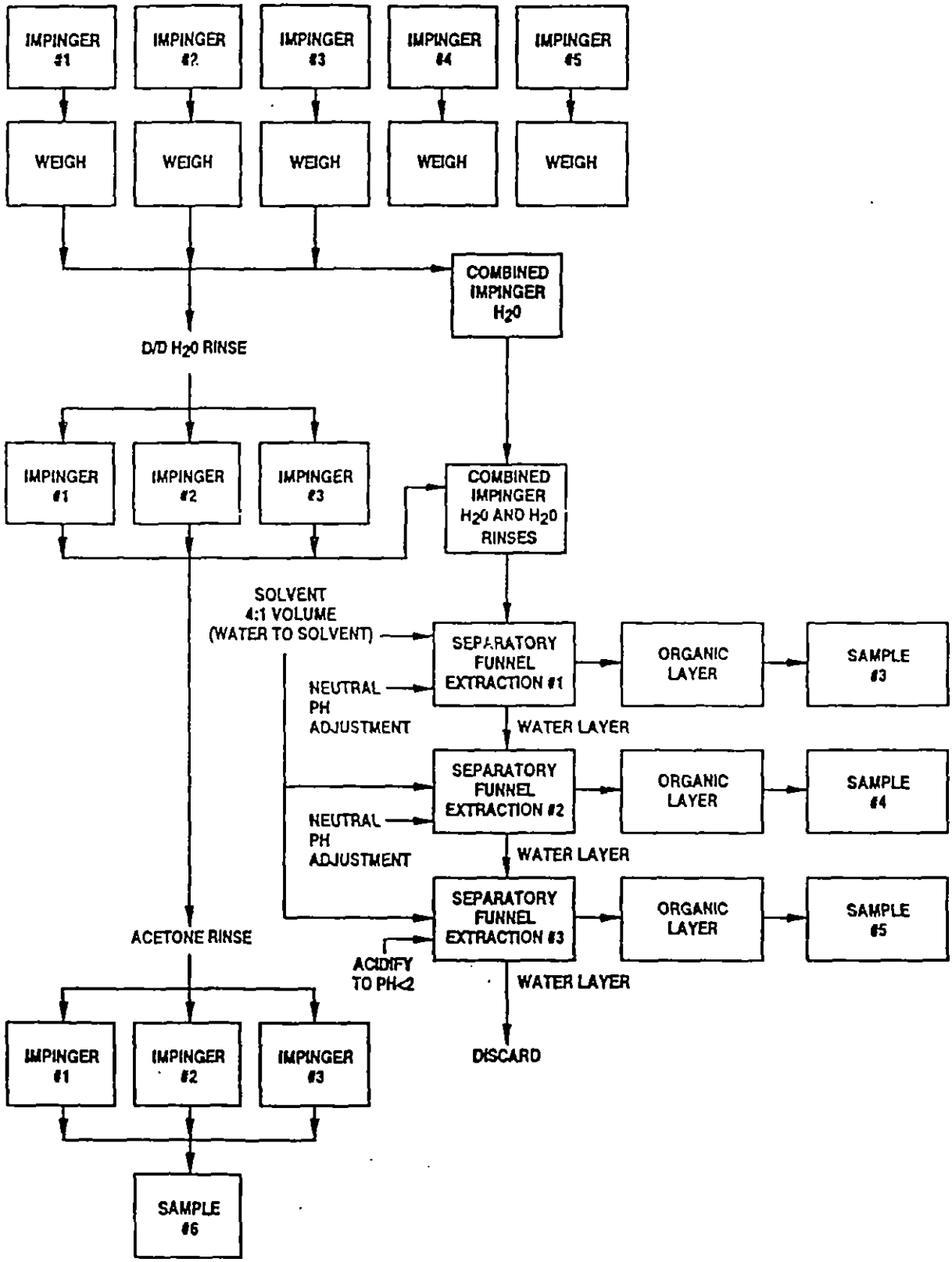

Figure 4-3. STEM Resin Module Recovery

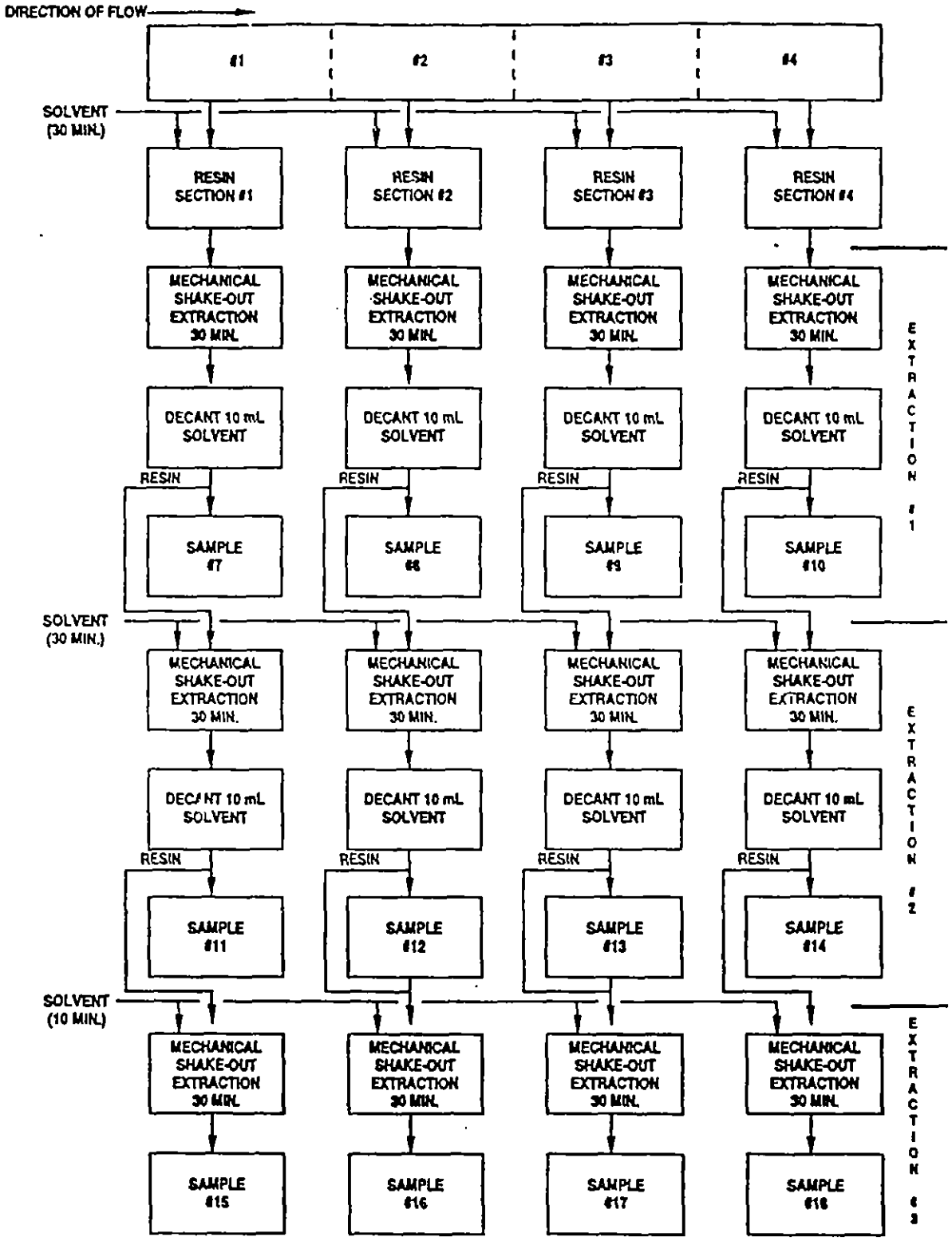

Figure 4-4. STEM Final Rinse Recovery

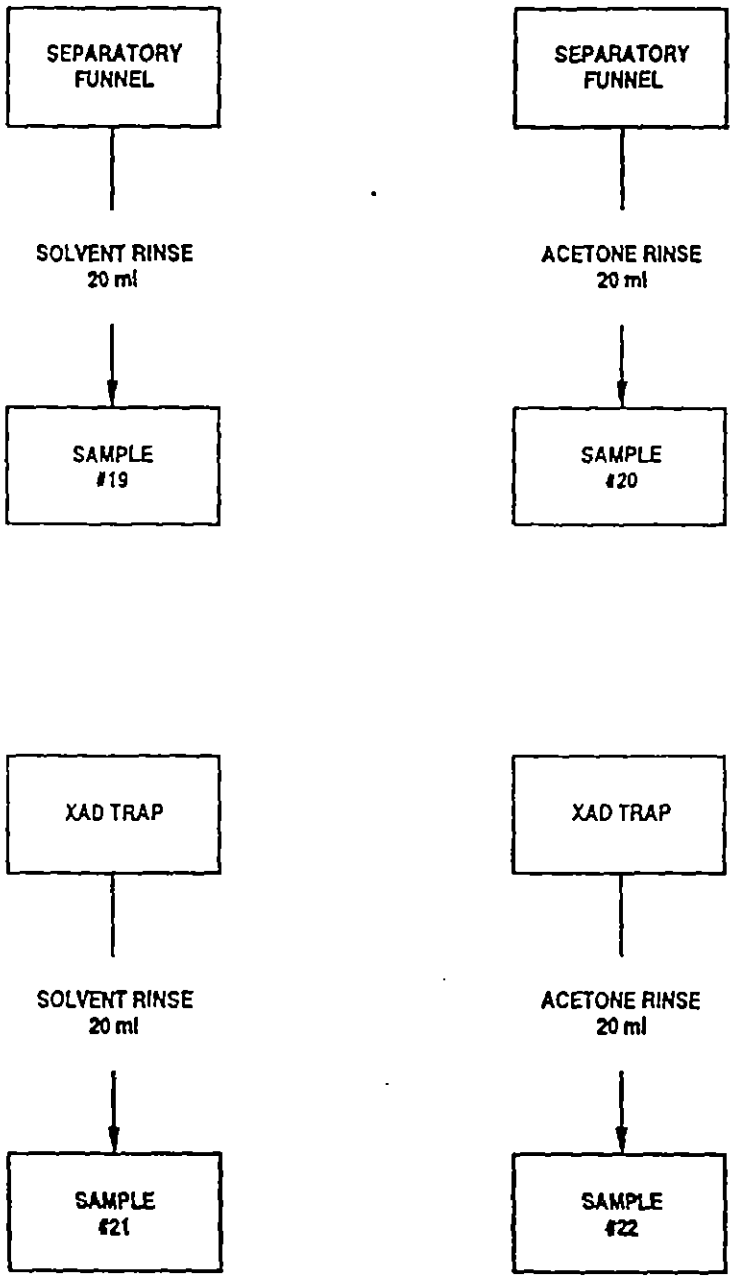

- The front-half of the filter housing were brush-rinsed with 100 mL of 0.1N nitric acid into an amber glass container with a Teflon®-lined cap. The container was sealed and labeled.

- The contents of the first three impingers were weighed to obtain weight gain and transferred to an amber glass container with a Teflon®-lined cap. The impingers, back-half of the filter housing, and all connecting glassware were rinsed with 100 mL of 0.1N nitric acid into the sample container. The container was sealed and labeled.

- The contents of the fourth impinger were weighed to obtain weight gain and transferred to an amber glass container with a Teflon®-lined cap. The impinger and connecting glassware were rinsed with 100 mL of 0.1N nitric acid into its separate sample container. The container was sealed and labeled.

- The contents of the fifth and sixth impingers were weighed to obtain weight gain and transferred to an amber glass container with a Teflon®-lined cap. The impingers and connecting glassware were rinsed with 100 mL of acidified potassium permanganate solution and combined in the sample container. The impingers and connecting glassware were then rinsed with 100 mL of deionized water into the same container. The container was sealed and labeled.

- The fifth and sixth impingers and connecting glassware were rinsed with 25 mL of 8N HCl into a sample container containing 200 mL of deionized water. The container was sealed and labeled.

- The silica gel impinger was weighed to obtain a weight gain.

- All containers were checked to ensure proper sealing, proper labeling, and that all liquid levels were marked.

- All samples were logged onto the chain-of-custody record and transferred to the on-site refrigeration unit to maintain a 4°C storage.

4.1.12 MCr^{+6} - Hexavalent Chromium

A sampling train prepared and operated in accordance with 40 CFR 266 Appendix IX Section 3.2, *"Determination of Hexavalent Chromium Emissions from Stationary Sources (Method Cr^{+6})"*, was used to measure and determine the emission rate of hexavalent chromium in the DFS exhaust gas. Sampling was conducted at Ports I and J on the DFS exhaust duct.

Sampling was isokinetic (± 10 percent) with readings of exhaust gas parameters recorded every 5 minutes at every sampling point during the traverse. Leak checks of the entire Method Cr^{+6} sampling train were performed before and after each sampling run and during port changes. All leak checks and leakage rates were documented on the relevant field test data sheets.

Sample recovery sequence for the Method Cr^{+6} sampling train was as follows:

- Rinse of front half of the train, probe, nozzle, aspirator, sample and recirculating lines was conducted at sampling location. These components were rinsed four times with deionized water into a polyethylene sample container. The container was sealed and labeled.

- Remainder of sampling train was transported to the recovery area.

- Physical condition of the sample train was noted (i.e., filter condition, impinger contents color, silica gel color, etc.).

- The pH of the solution contained in the first impinger was determined using a pH indicator strip. The pH of the solution must be greater than 8.5.

- Connected the first impinger to a nitrogen purge line and disconnected the last impinger before the silica gel impinger. Turned on the nitrogen and regulated the flow rate to 5 L/minute. Purged for one hour.

- Once the purging was completed, the contents of the first four impingers were measured for volume and transferred to a precleaned polyethylene sample container (same bottle used to recover probe, nozzle, and heat traced line).

- The four impingers were then rinsed four times with DI water into the same polyethylene sample container as the impinger contents.

- The entire sample was filtered through a 0.45 micrometer acetate membrane filter and collected in a 1000 mL graduated cylinder. The polyethylene sample container was rinsed with DI water three times. These rinses were passed through the filter and added to the sample filtrate. The Teflon® reservoir was rinsed with deionized water three times and passed through the filter and added to the sample filtrate. The FINAL VOLUME of the sample filtrate was determined and returned to the rinsed polyethylene sample container.

- Marked the FINAL VOLUME on the polyethylene sample container and the setup and recovery data sheet.

- The Teflon® reservoir was rinsed once with 0.1N HNO_3 and once with deionized water and the rinses were discarded.

- The silica gel impinger was weighed to obtain a weight gain.

- All containers were checked to ensure proper sealing, proper labeling, and that all liquid levels were marked.

- All samples were logged onto the chain-of-custody record and transferred to the on-site refrigeration unit to maintain a 4°C storage

4.1.13 M3 - Oxygen and Carbon Dioxide Determination

Oxygen and carbon dioxide concentrations were determined for each performance run according to 40 CFR 60, Appendix A, "*Gas Analysis for the Determination of Dry Molecular Weight*".

Analysis was conducted using an Orsat combustion gas analyzer. A sample from the Tedlar® bag was drawn into the analyzer and immediately analyzed for percent CO_2 and percent O_2. The percentage of the gas that is N_2 and CO was determined by subtracting the sum of the percent CO_2 and percent O_2 from 100 percent.

Analysis and calculation procedures were repeated until the individual dry molecular weights for any three analyses differed from their mean by no more than 0.3 g/g-mole (0.3 lb/lb mole). These three molecular weights were averaged and the results reported to the nearest 0.1 g/g-mole (0.1 lb/lb-mole).

These concentrations were needed to calculate the molecular weight of the gas stream for determining the volumetric flow of the sampling location. The O_2 was also required for correcting pollutant emissions to 7% O_2.

4.1.14 EPA M10 - Carbon Monoxide

The CO concentration was determined in accordance with EPA Method 10 using monitors 24-AIT-207 and 16-AIT-059 located downstream of the ID fan (reference Table D-7-1 of the DFS GB ATB Plan). The operation procedures for the TOCDF CEMS followed those described in the TOCDF Continuous Emissions Monitoring Plan - EG-035.

4.1.15 Depot Area Air Monitoring System (DAAMS)

The DAAMS is a sampling and analyses technique capable of detecting the chemical agent GB. Three DAAMS tubes were collected each hour during sampling. Three tubes were collected to allow for confirmation of the agent concentration using three separate analyses. Exhaust gas is withdrawn from the duct and diluted with instrument air. The diluted gas passes through an absorbent tube that traps organic compounds. The sample is collected for about one hour. The tube is then transferred to the CAL where the tube is thermally desorbed into a GC equipped with a flame photometric detector.

4.2 PROCESS SAMPLING

Samples of process streams were collected using EPA Methods from "*Sampling and Analysis Methods for Hazardous Waste Combustion*," December, 1983. Table 4-3 lists the process samples collected, analyses performed, sampling method, and sampling frequency.

TABLE 4-3 PROCESS SAMPLES COLLECTED

SAMPLE STREAM	ANALYSIS PERFORMED	SAMPLE ID	SAMPLING METHOD	SAMPLING FREQUENCY	SAMPLE VOLUME
Wet Scrubber Recirculation Brine	Agent, pH, VOCs. SVOCs, HRA Metals	SR	Tap(S004)	Every 30 minutes, Composited	One 40-mL vial and one 500-mL bottle
Process Water	VOCs, SVOCs, HRA Metals	PW	Tap(S004)	One sample per run	Two 40-mL vials, one 500-mL, and two 1-L bottles
Stack Condensate	Agent, VOCs, SVOCs, HRA Metals	CD	Tap (S004)	One sample per run	Two 40-mL vials, one 500 mL, and two 1-L bottles
NaOH Makeup	VOCs, SVOCs, HRA Metals	CA	Tap(S004)	One sample per run	Two 40-mL vials, 1-500 mL, and 2-1 L bottles
Agent	Purity, HRA Metals, Organic Impurities, Density	GB	Tap (S004)	One sample per run	Three vials, 1 mL each of neat agent
Cyclone Bin Residue	Agent, HRA Metals, TCLP: Metals, VOCs, SVOCs	CB	Grab(S007)	One sample per run	One 500-mL bottle and one 1-L bottle
HDC Residue	Agent, HRA Metals, TCLP: Metals, VOCs, SVOCs	HDC	Grab(S007)	One sample per run	One 500-mL bottle and one 1-L bottle

5.0 EXHAUST GAS AND PROCESS STREAMS ANALYSIS PROCEDURES

This section describes the analytical protocols which were followed in the analysis of the samples collected during the DFS ATB. Results of these analyses are reported in Section 2. Validation of the data is reported in Appendix E. The parameters, sample preparation, and analytical methods are provided in Table 5-1.

5.1 PROCESS STREAM SAMPLES

Samples were collected of the wet scrubber recirculation brine, sodium hydroxide makeup, process water and stack condensate. These liquid samples were collected by TRC personnel. Ash samples were collected from the HDC bin and the cyclone bin. These samples were collected by the Monitoring Branch personnel. A brief description of the analysis performed is presented in the following sections.

5.1.1 Agent Analyses Method

Samples of the wet scrubber brine, stack condensate, and ash residue samples, were screened for agent before the samples left the facility. The method used for this analysis was TOCDF CAL procedure number TE-LOP-572. This method used chloroform to extract the agent. An aliquot of the chloroform extract was injected into a GC with a flame photometric detector. The GC separates the organic compounds and the phosphorus in the agent GB emits light that is measured by the detector. Calculation of the concentration is accomplished by the use of external standards.

5.1.2 Agent Characterization Methods

The organic composition of the agent was determined by the CAL using Method TE-LOP-584. The compounds determined are listed in Table 5-2. Two aliquots of each agent sample were analyzed to determine the agent purity. The two aliquots were weighed into tubes to estimate the density from the weight of a known volume pipetted into the tubes. The aliquots were then diluted with isopropyl alcohol to a known volume. Portions of the diluted samples were injected three different times into a gas chromatograph equipped with a flame ionization detector (GC/FID). The concentration of the organic compounds were calculated by comparison to external standards. All of the injections were averaged to calculate the concentrations.

Aliquots of the agent were also prepared for the analysis of metals by the CAL. Aliquots of the agent were digested in nitric acid to destroy the agent and solubilize the metals present. When the organic matrix was destroyed by the acid, the aqueous preparation was tested for agent. The samples were sent off site for the analysis of metals by Mountain States Laboratory. The mercury concentration was determined by Method 7470. The HRA metals were determined by analysis by inductively coupled plasma emission spectroscopy (ICP).

TABLE 5-1. ANALYTICAL METHODS

PARAMETER	MATRIX	PREPARATION METHOD	ANALYSIS METHOD
Agent	DAAMS Tubes	TE-LOP-562	TE-LOP-562
VOCs	Tenax® and Tenax®/charcoal	5041	5041
SVOCs	XAD-2®/filter/cond./rinse	3510B/3540B	8270B
Total PCBs/Co-planar PCBs	XAD-2®/filter/rinse	MM1668	MM1668
PCDDs/PCDFS	XAD-2®/filter/rinse	M0023A	M0023A/8290
Volatile TOC	Bag/Condensate	M0040/M5030A	GC/FID
Semi-volatile TOC	XAD-2®/filter/cond./rinse	3510B/3540B	GC/FID
Non-Volatile TOC	XAD-2®/filter/cond./rinse	None	Gravimetrically
STEM	XAD-2®/filter/cond./rinse	STEM	GC/FID
Particulate Matter	Filter/rinse	M5	M5
HCl/HF	Impinger Solution/rinse	9057	9057
HRA Metals and Phosphorus	Filter/impinger solution/rinse	40 CFR 266, Appendix IX, Section 3.1	MM6020®/7470A
Cr^{+6}	Impinger solution/rinse	40 CFR 266 Appendix IX, Section 3.2	40 CFR 266, Appendix IX, Section 3.2
Agent	Brine/water/residue	TE-LOP-572	TE-LOP-572
VOCs	Aqueous/residue/VOST Cond.	5030A	8260A
SVOCs	Brine/water/residue	3510B/3540B	8270B
PCBs	Brine/water/residue	MM1668	MM1668
PCDDs/PCDFs	Brine/water	8280	8280
PCDDs/PCDFs	Residue	8290	8290
TCLP Metals	Residue	1311/3010A/7470A	6010A/7470A
HRA Metals	Brine/water/residue	3010A/3050B/7471A	6010A/7471A

TABLE 5-2. TARGET ANALYTE LIST FOR AGENT CHARACTERIZATION

COMPOUND	ANALYSIS METHOD
GB (Sarin)	TE-LOP-584
Diisopropylcarbodiimide	TE-LOP-584
Diisopropylmethylphosphonate	TE-LOP-584
Diisopropylurea	TE-LOP-584
Tributylamine	TE-LOP-584
HRA Metals	See Section 5.1.3
Estimated Density	Gravimetric Analysis

5.1.3 Inorganic Analysis Methods

The liquid process samples were analyzed for the HRA metals. These metals were Al, Sb, As, Ba, Be, B, Cd, Cr, Co, Cu, Pb, Hg, Mn, Ni, Se, Ag, Ti, Sn, V, and Zn. All these metals except mercury were analyzed by inductively coupled plasma spectroscopy, Method 6010A. Mercury was analyzed by Methods 7470A.

Ash residue from the HDC and cyclone bins were analyzed for the complete HRA metals using Methods 6010A and 7471A. In addition, the TCLP Metals of As, Ba, Cd, Cr, Pb, Hg, Se, and Ag were evaluated using the TCLP Extraction Method 1311 and analyzed by Methods 6010A and 7470A.

5.1.4 Organic Compound Analysis Methods

Scrubber recirculation brine, process water, stack condensate, NaOH makeup, and residue ash samples were all analyzed for volatile and semi-volatile organic compounds by Methods 8260A and 8270B, respectively. The brine, stack condensate, and residue samples were also analyzed for PCBs using Modified Method 1668 and PCDDs/PCDFs using Methods 8280 and 8290.

5.2 EXHAUST GAS SAMPLE ANALYSIS

Exhaust gas samples were collected from ports located in the duct extending between the ID Fan and the common stack. The parameters measured included PCBs, PICs, total organic compounds, energetic materials, HRA Metals, particulate matter, HCl, HF, CO_2, CO, O_2. All exhaust gas samples were collected by TRC personnel.

This section describes the analytical protocols which were followed in the analysis of the exhaust gas samples collected during the DFS ATB. The parameters, sample preparation, and analytical methods are provided in Table 5-1.

5.2.1 Analysis of Hydrogen Halide Emissions (HCl/HF)

Hydrogen chloride and HF in the exhaust gas collected in the impingers of the M0050 train were analyzed by ion chromatography using 40 CFR 266, Appendix IX, Section 3.3.3, Method 9057. This method separates the anions fluoride and chloride by ion chromatography and the eluting anions are detected. Concentrations were calculated based on external calibration standards.

5.2.2 Analysis of Particulate Matter

The quartz fiber filters used in the M0050 sampling train along with the nozzle, probe, heat traced line, and the front half of the filter holder rinses were used to determine particulate matter emission from the DFS. All of these elements were dried, desiccated and repeatedly weighed until a constant weight was achieved. The sum of the net weights were used to determine total collected particulate matter. A field blank sample was analyzed following the same procedures, and all analytical results were blank corrected. The procedures followed were those presented in 40 CFR 60, Method 5.

5.2.3 VOST Analysis Method

Thirty-three M0030 tube pairs and five VOA Vial samples were analyzed for volatile organic PICs following the procedures of Method 5041. Method 5041 utilizes thermal desorption preparation technique followed by GC/MS analysis. The method involves thermal desorption of the tube pairs using an inert gas. The gas stream was then pulled through 5 mL of organic free water and trapped on a sorbent trap of a purge and trap system. The trap is thermally desorbed to elute the components into the GC system for complete separation. Table 2-7 in Section 2 lists the target analytes analyzed for VOCs.

The concentrations present in the samples were calculated using the technique of internal standards. Three internal standards (Bromochloromethane, 1,4-Difluorobenzene and Chlorobenzene-d5) were spiked into every standard, blank and sample. Three surrogates (1,2-Dichloroethane-d4, Toluene-d8, and 4-Bromofluorobenzene) were also spiked.

5.2.4 Analysis of M0010 - Semi-Volatile Organic Compounds

Semi-volatile organic analysis was performed on the M0010 collected samples according Method 8270B. Three fractions of the collected sample (heated front half fraction, cooled XAD-2® resin fraction, and collected condensate) constituted the complete sample. All three

fractions were extracted separately using Methods 3510B and 3540B. The extracts were then combined for a single injection into the GC. Table 2-9 in Section 2 lists the 135 target compounds reported by this analysis.

Quantitation was performed using six internal retention time standards and specific ion response factors generated from the average of a five-point calibration. The six retention time internal standards used for quantitation are:

- 1,4-Dichlorobenzene-d_4,
- Naphthalene-d_8,
- Acenaphthene-d_{10},
- Phenanthrene-d_{10},
- Chrysene-d_{12}, and
- Perylene-d_{12}.

Target analyte determination was made from both retention times and by matching three major ions from the mass spectrum of GC eluent to those in the mass spectral library. A standard solution containing analytes from the target list was used to generate the mass spectral library.

5.2.5 Analysis of M0010/M0040 - Total Organics

The method for total organics measurement incorporates three distinct sets of analyses. The first required the collection of the VTOCs according to Method 0040 and the measurement by a field GC equipped with a flame ionization detector (FID). In addition, the VTOCs collected in the condensate trap of Method 0040 are analyzed by Purge and Trap GC/FID.

The second set of analyses required sample collections by SW-846 Method 0010 and analysis by GC/FID. This analyses determined the concentrations of SVTOCs with a boiling point between 126°C to 300°C.

The third set of analyses determined the concentrations of non-volatile TOCs with boiling points of 300°C and higher by a gravimetric procedure.

5.2.5.1 M0040 Volatile Total Organic Compounds

A gas sample collected in an opaque Tedlar® bag was analyzed in the field by gas chromatography/flame ionization detection (GC/FID). Analysis was performed for the organic compounds boiling in the range of -160°C to 126°C. The instrument was set up in the field lab with column and conditions appropriate for the analysis of C_1 - C_8 n-alkanes. Retention times were determined and the calibration was performed with gaseous standards of C_1 - C_8 alkanes in air or nitrogen. Compounds of interest were identified by retention times or retention time ranges and quantitative analysis was performed.

The gas chromatographic system used for this analysis was a Hewlett Packard 5890 Series II gas chromatograph equipped with a flame ionization detector, temperature controlled sample valve and loop, temperature programmable oven, and an appropriate capillary column to separate the compounds of interest. The instrument conditions for the analysis were as follows:

- Carrier gas - Helium at 7.0 mL/min.
- Oven temp - 70°C for 1 minute then 70°C - 195°C @ 12° C/min Hold for 3.0 minutes.
- Gas injection with 2.0 mL sample loop.

To perform the analysis of gaseous samples, the sample bag was connected to the gas sample valve. The sample loop was purged with the sample and the contents of the loop were injected. The integrator/data system and recorder were started simultaneously with injection. The chromatograph, recorder, and integrator/data system were set up according to the manufacturer's manuals and calibrated. Operating parameters were confirmed (the operating parameters are listed on each chromatogram (identified by method file name), with each chromatogram being uniquely labeled (directory path and file number).

As a complement to the field GC analysis, the collected condensate was analyzed using purge and trap techniques and a GC/FID. To determine total organics, purge and trap gas chromatography was performed to determine compounds in the C_1 - C_8 hydrocarbon range. The volatile organic sample contained in a VOA vial was analyzed by Quanterra using a GC/FID. The instrument was set up with conditions and column appropriate for the analysis of C_4 - C_8 n-alkanes. Retention times were determined and calibration was performed with a liquid standard of C_5 - C_8 alkanes. Compounds of interest were identified by retention times or retention time ranges and quantitative analysis was performed.

5.2.5.2 M0010 - Semi-Volatile and Non-Volatile Total Organic Compounds

The gas sample collected by Method 0010 was extracted in three fraction by Method 3542. The separate extracts were then combined into a single fraction for analysis. The extract was analyzed for hydrocarbons with boiling points between 126°C and 300°C by GC/FID. The GC/FID was calibrated with C_8 - C_{17} hydrocarbons providing a retention time window corresponding to a boiling point range of 126°C to 303°C. Therefore, integration of detector response began at the retention time of C_8 and terminated at the retention time of C_{17}. The C_8 and C_{17} peaks were not included in this integration. This resulted in the integrated area covering material in the boiling point range between 126°C and 300°C.

The sample quantitation was performed by first summing the peak areas in the ranges obtained for the boiling point retention time calibration. Then, with the response - amount calibration curve, the area sums are converted to amounts of material in the reported boiling point ranges.

The result of each analysis is reported as one number, corresponding to the quantity of material found in the 126°C and 300°C boiling point range.

For the non-volatile TOCs, a gravimetric determination was performed. A representative portion of the sample extract was placed in a cleaned tared weighing pan. The weighing pan was placed under a fume hood where the solvent was allowed to evaporate to visual dryness at room temperature. The weighing pan was desiccated for a minimum of 8 hours. Following this desiccation period, the weighing pan was weighed at approximately 4-hour intervals until three successive values differed by no more than ± 0.03 mg. The results of the analysis were averaged and reported in units of mg organics/sample.

5.2.6 Analysis of M0023A - PCDDs/PCDFs

The samples collected by the M0023A sampling train were extracted and analyzed for PCDDs/PCDFs according to Methods 0023A and 8290. Quality control protocols included the spiking of the sampling train (XAD-2® trap) with five surrogate standards prior to sampling. The surrogate recoveries are measured relative to the internal standards and are a measure of sample collection efficiency.

The analytical method calls for the use of high-resolution gas chromatography and high-resolution mass spectrometry (HRGC/HRMS). Table 2-11 in Section 2 lists the target analytes for the method.

Sample extracts were first analyzed using the DB-5 capillary column to determine the concentration of each isomer of PCDDs and PCDFs (tetra- through octa-). Any sample which was found to contain tetra-chlorinated dibenzofuran (2,3,7,8-TCDF) required another aliquot to be taken and analyzed in a separate run, using the DB-225 column to confirm the presence of the 2,3,7,8-TCDF isomer. The 2,3,7,8-TCDF was quantified using the DB-225 analytical results.

The HRGC/HRMS used for the analysis of PCDDs/PCDFs was initially calibrated using compounds of interest at five different concentrations. The calibration standard comprised of nonane solutions containing unlabeled and carbon-labeled PCDDs and PCDFs. Calibrations were conducted in accordance with Section 7.7 of SW-846 Method 8290. The calibration of the HRGC/HRMS met the acceptance criteria specified in subsection 7.7.2 of the method.

A Laboratory Control Sample (LCS), a laboratory blank spiked with the compounds of interest was prepared and analyzed along with the field samples to further monitor the extraction efficiency of the method. Results of the analysis of these samples is listed in Appendix E.

5.2.7 Analysis of M23 - Polychlorinated Biphenyls

The samples collected by the M23 sampling train were extracted and analyzed for PCBs according to Modified Method 1668. Quality control protocols included the spiking of the sampling train (XAD-2® trap) with a surrogate standard (13C-3,4,4',5-TetraCB) prior to sampling. The surrogate recovery was used to monitor efficiency and was not used in the quantitation of unlabeled analytes.

The HRGC/HRMS used for the analysis of PCBs was initially calibrated using compounds of interest at five different concentrations. The concentrations of each compound was quantitated relative to the closest eluting internal standard and RFs and average RFs for each compound were calculated. Calibrations were conducted in accordance with Modified Method 1668. The calibration of the HRGC/HRMS met the acceptance criteria specified in Annex B of the DFS QAPP and Modified Method 1668.

An LCS was prepared and analyzed to provide information on the accuracy of the analytical method and laboratory performance. Results of the LCS were within the QC limits as reported in Appendix E.

5.2.8 Analysis of STEM - Energetic Compounds NG, TNT, and RDX

The initial sample recovery and sample preparation was performed on-site. After recovery of the sampling train the field chemist conducted a series of 22 separate extractions yielding 22 separate samples which were analyzed by GC. In the laboratory, each extract was analyzed by gas chromatography according to Section 8.0 of the *Quality Assurance/Quality Control Plan for Sampling and Analysis of Stack Emissions for Energetic Compounds*; Revision 2 dated 23 May 1988 as revised by the USACHPPM letter dated November 22, 1996.

According to the referenced QA/QC Plan, surrogates were added to the first impinger and XAD-2® prior to sampling and subsequent field extraction. The STEM train was spiked with 200 μg of EGDN (100 μg in the first impinger and 100 μg in the first section of the XAD-2® resin module) and 200 μg of DNFB (100 μg in the first impinger and 100 μg in the first section of the XAD-2® resin module). The recovery of these surrogates from the sampling train provided an indication of the recoveries of the target analytes.

Analytical results were obtained for each target analyte based on the applicable calibration plot. The total μg content for each targeted analyte was calculated by combining the results obtained for each of the 22 extracted samples according to the calculations provided in Appendix D of the referenced QA/QC Plan.

An LCS was analyzed to provide information on the accuracy of the analytical method and on laboratory performance. The results of the LCS were within the QC limits established as reported in Appendix E.

5.2.9 Analysis of Multi-Metals Sampling Train - HRA Metals and Phosphorus

The samples collected by the Multi-Metals sampling train were extracted and analyzed for HRA Metals according to Modified Method 6020 and Method 7470.

Sampling train components were recovered and digested in separate front- and back-half fractions. Materials collected in the sampling train were digested with acid solutions to dissolve organics and to remove organic constituents that may create analytical interferences. Acid digestion was performed using conventional Parr® Bomb or microwave digestion techniques.

The filter, front-half 0.1N HNO_3 rinse, and back-half 0.1N HNO_3 impinger catches were used to determine the concentrations of all the HRA metals except mercury. A Modified Method 6020 (ICP-MS) was used for this analysis. The modification made to this method allowed for the analysis of the additional analytes boron, phosphorus, and tin. Mercury results were obtained for the fourth impinger 0.1N HNO_3 rinse, the back-half $KMnO_4$ impinger catch, and the back-half 8N HCl impinger rinse using Method 7470A (CVAAS).

5.2.10 Analysis of MCr^{+6} - Hexavalent Chromium

DFS exhaust gases were sampled for hexavalent chromium as described in 40 CFR 266, Appendix IX, Section 3.2. Each Method Cr^{+6} sample train yielded one individual sample for analysis of hexavalent chromium only. The samples were analyzed for Cr^{+6} by an ion chromatograph equipped with a post-column reactor and a visible wavelength detector. The IC/PCR separated the Cr^{+6} as chromate (CrO_4^-) from other components in the sample matrices that would interfere with the Cr^{+6} -specific diphenylcarbazide reaction that occurs in the post-column reactor. To increase sensitivity for trace levels of chromium, a pre-concentration system was also used in conjunction with the IC/PCR. In addition, field blanks were provided by TRC.

5.2.11 Analysis of M3 - O_2 and CO_2

Analysis was conducted using an Orsat combustion gas analyzer. A sample from the Tedlar® bag was drawn into the analyzer and immediately analyzed for percent CO_2 and percent O_2. For the purpose of calculating molecular weight of the gas stream, percent Nitrogen (N_2) in the gas stream was determined by subtracting the sum of the percent CO_2 and percent O_2 from 100 percent. Carbon monoxide concentration was considered to be 0.0%.

Three individual gas injections to the Orsat were analyzed. These three molecular weights were averaged and the results reported to the nearest 0.1 g/g-mole (0.1 lb/lb-mole). In addition, the O_2 was also required for correcting pollutant emissions to 7% O_2.

5.2.12 Analysis of M10 - CO

The CO concentrations in the DFS exhaust gas was determined in accordance with 40 CFR 60, Appendix A, Method 10 using facility monitors 24-AIT-207 and 16-AIT-059. The operation procedures for the TOCDF CEMS are described in the TOCDF Continuous Emissions Monitoring Plan EG-035.

5.2.13 DAAMS Tube Analysis

For the DFS ATB the three DAAMS tubes collected each hour were labeled A, B, and C. The three tubes were analyzed by three different chromatographic conditions by three different GCs. Tube A was analyzed with the QC sample and was designated as the prime tube. On a given performance run day, all of the A tubes were analyzed on one GC, all of the B tubes on a second GC, and all of the C tubes on a third GC. For the next performance run day, the tube GC combinations were changed. To confirm the presence of Agent GB, all three tubes for any given hour sample must demonstrate similar results.

The DRE summaries in Table 2-4, Section 2.0, show there were three cases where the Agent GB concentrations were above the LOQ in both the A and B tubes. In all three cases, the presence of Agent GB was not confirmed in the C tubes or by the ACAMS in the DFS duct or the common stack. Therefore, there was no release of detectable Agent GB to the environment.

6.0 QUALITY ASSURANCE/QUALITY CONTROL SUMMARY

QA/QC procedures were conducted before, during, and after the DFS ATB to ensure achievement of the objectives established in the DFS ATB Plan. A detailed QA/QC Report is provided in Appendix E. This section summarizes QA/QC procedures and results, including the review of the following:

- Sample collection;
- Sample documentation;
- Sample management;
- Sample analysis; and
- Analytical data comparability, representativeness, and completeness.

6.1 SAMPLE COLLECTION

Sample collection procedures were conducted in accordance with each of the EPA sampling methods and the DFS ATB Plan. DSHW approved changes to the DFS ATB Plan included:

- Reduction of the number of TOC sample bags on the Method 0040 sampling train to two (2) bags per run. One bag was collected during the first three-hour period of the day's sampling activities, and the second collected during the second three-hour period. The daily field blank was run between the two samples.

- A modification was made to the M23 procedures for PCB recovery. The toluene QC rinse was omitted from the recovery procedure. This toluene rinse is used as a final QC rinse of the PCDD/PCDF train and is analyzed only for PCDD/PCDF. Because the M23 train was used only for PCB collection, it was not appropriate to collect or analyze a toluene rinse for QC purposes.

- A modification to the M3 sampling technique was made. A single bag was collected over the entire six-hour duration during Run 1. After Run 1, this was corrected and during Runs 3 and 4 two (2) sample bags were collected during the six-hour sampling period. One bag was filled during the first three-hour sampling period; a second bag was filled during the second three-hour sampling period.

The key sample collection procedures for using sample containers and reagents, and collecting process and exhaust gas samples are discussed in the following subsections.

6.1.1 Sample Containers and Reagents

All sampling containers utilized for process sample collection and exhaust gas sample recovery were received in sealed boxes from the vendor with certificates of compliance with EPA specifications. All glassware used in the exhaust gas sampling trains was properly cleaned prior to sample collection following procedures specified in the EPA methods.

The VOST Tenax® and Tenax®/charcoal sorbent tubes were supplied by Air Toxics and accompanied with certificates of analysis. All XAD-2® resin used for M0010, M0023A, M23, and M0010-TOC sampling trains was cleaned by Quanterra and verified. Copies of the VOST sorbent tube certificates of analysis and the results of the XAD-2® resin residual methylene chloride and extractable organics tests are included in Appendix E, Annex C. All impinger solutions and sample recovery reagents used during collection of the exhaust gas samples met the requirements of the respective EPA sampling methods.

6.1.2 Process Samples

Liquid process sampling procedures complied with the specifications of Method S004. The sample line and container were flushed several times prior to all sample collection, and sample container fill times exceeded one minute. Samples to be analyzed for volatile organic compounds were collected in VOA vials with zero headspace.

A representative sample of the ash residue generated during each run was collected according to Method S007.

6.1.3 Exhaust Gas Samples

Verification of the absence of cyclonic flow in the duct was conducted prior to collection of exhaust gas samples. A cyclonic flow test was conducted on Ports I and J, on November 13, 1996 and Ports N1 and N2 on December 12, 1996, in accordance with the procedure described in M1. Appendix B, Annex F presents cyclonic flow data performed by TRC.

Exhaust gas sampling procedures were conducted in accordance with each respective EPA sampling method. Leak checks and equipment calibrations were conducted for each exhaust gas sampling train as required. Dry gas meters, pitot tubes, nozzles, and thermocouples were calibrated prior to the DFS ATB. Equipment calibration data are presented in Appendix B, Annex C.

CEMS analyzers used to monitor O_2 and CO concentrations were calibrated and operated according to the TOCDF CEMS Monitoring Plan.

6.2 SAMPLE DOCUMENTATION

Sample documentation procedures conducted during the DFS ATB included sample labeling, chain-of-custody (COC) procedures, and maintenance of a field logbook. No significant deviations occurred from the sample documentation procedures presented in the SAP.

Sample containers were labeled following the designated code system as stated in the Quality Assurance Project Plan (QAPP). Liquid-process and exhaust gas sample labels were filled out and affixed to the appropriate container at the time of sample collection or recovery. Sample container lids were sealed with custody seals signed and dated by sampling personnel.

A COC form was used to document sample handling from the time of collection through transfer to the laboratory. The COC was signed by each person in possession of the samples. The TRC QA/QC representative verified the completeness of the COC forms as specified in the QAPP prior to relinquishing custody to the laboratory.

A field logbook was maintained by the TRC QA/QC representative during the DFS ATB. The date and start and stop times of each test, times of all testing interruptions, times of process sample collection, and issues related to sample collection were noted in the field logbook. During the DFS ATB, TRC also maintained field run sheets. TRC field run sheets are included in Appendix B. The TRC logbook is on file at the TRC Salt Lake City office.

6.3 SAMPLE MANAGEMENT

Sample management procedures conducted during the DFS ATB included sample transportation and receiving, sample preservation, and sample holding times.

6.3.1 Sample Transportation and Receiving

Following the completion of each performance run, the collected samples were stored under refrigerated conditions until shipment to the respective laboratories. All samples were transported by private aircraft at the conclusion of the DFS ATB. Delays in the field testing required an intermediate shipment to take place prior to Performance Run 3. This shipment consisted of Performance Run 1 and the Field Blanks for all sampling trains. This shipment was required to ensure that analytical holding times would not be compromised. At the conclusion of Performance Run 4, a second shipment of samples took place. This shipment consisted of Performance Runs 3 and 4.

Each shipment followed the same procedure. Once the samples cleared the TOCDF, they were transported to Salt Lake City Airport by TRC personnel. At the airport the samples were properly transferred to the custody of the TRC employee who accompanied the samples on the

flight to Sacramento, California. All COCs were properly transferred and accompanied the samples through out transportation of the samples. Upon arrival at the Sacramento airport, the samples were properly transferred to representatives of Quanterra, and Air Toxics. Each laboratory's representative inspected the ice chests and took custody of their samples. All COCs were properly transferred and with a copy of the documents remaining with the samples, and a copy kept by the TRC representative.

Upon arrival at the laboratories, custody of the samples was transferred to the laboratory technician and were coded into the laboratory tracking system with a unique sample number.

6.3.2 Sample Preservation

The pH of the process water and stack condensate samples analyzed for metals was maintained below 2.0 to enhance the stability of the metals in solution. Samples were preserved by adding a 5.0-mL ampule of 1: 1 HNO_3. A preservative was not added to the recirculation brine since it is a highly buffered solution. No preservative was added to the NaOH makeup samples since it is an 18% NaOH solution. The addition of preservative was not required for any of the other samples collected during the DFS ATB.

The integrity of all samples collected during the DFS ATB was maintained by placing samples in an on-site refrigeration unit which maintained a temperature of 4°C. This refrigerator is equipped with a visible temperature indicator which was monitored to ensure that the internal temperature remained constant. This refrigerator was also equipped with door locks which were engaged when ever access to the refrigerator was not required. All keys to the door locks remained in the custody of either the TRC Project Manager and/or the TRC Laboratory Coordinator.

6.3.3 Sample Holding Times

All sample holding times were met, as specified in the respective analytical methods, with the exception of the re-extracted scrubber brine sample DFS-ATB-SR-1 of Run 1, which was analyzed by Method 8270B for semi-volatile compounds. This sample was re-extracted due to poor acid compound recovery. The re-extraction was performed one day outside the SW-846 specified holding time of 7 days from collection, but within the holding time (14 days) specified in Annex B of the ATB QA plan.

6.4 SAMPLE ANALYSIS

Sample analysis procedures were conducted without significant deviation from each respective EPA analysis method and the DFS ATB Plan.

Table E-1-1, in Appendix E, provides a list of all field samples collected and analyzed during the DFS ATB. This table includes the laboratory sample number, field sample number, run number, sample identification, sample date, and the analytical testing parameters for each sample.

A data validation process was conducted by TRC to assess the quality and usability of the analytical data obtained during the DFS ATB. Evaluation criteria used for data validation are outlined in the analytical methods, *USEPA Contract Laboratory Program National Functional Guidelines for Organic Data Review* (EPA, 1994a), and *USEPA Contract Laboratory Program National Functional Guidelines for Inorganic Data Review* (EPA, 1994b).

The data review included an evaluation of the following:

- GC/MS tunes,
- Instrument calibration,
- Blank sample results,
- Surrogate recoveries,
- Matrix spike/matrix spike duplicate results,
- Laboratory control sample results,
- Internal standard performance,
- Interference check samples, and
- Duplicate sample results.

The data validation process verified that the analytical data set obtained from the DFS ATB is acceptable for a Category I project as defined in *EPA Requirements for Quality Assurance Project Plans for Environmental Data Operations, EPA QA/R-5* (EPA, 1993). Category I projects require the most detailed and rigorous quality assurance and quality control for legal and scientific defensibility. Although several data points were qualified through the data validation process as estimates, they are still useable for the purposes of this project. Rejected data points are not useable.

6.5 COMPARABILITY, REPRESENTATIVENESS, AND COMPLETENESS

Appendix E of this ATB Final Report for the DFS presents the results of the quality assurance quality control activities employed before, during and after the ATB to meet the objectives established in the *GB Agent Trial Burn Plan for the Deactivation Furnace System (DFS)*, EG&G Revision 2, December 12, 1996. The ATB consisted of three valid performance runs conducted on January 7, 10, and 11, 1997.

Comparability is a qualitative parameter expressing the confidence with which one data set can be compared with another. This goal is achieved through using standard techniques to collect

and analyze representative samples and reporting analytical results in appropriate units. All samples collected and analyzed during the DFS ATB were collected and analyzed according to the DFS ATB and specific EPA approved sampling procedures. All reported results are reported in units representative of the matrix sampled. The results presented in the ATB Final Report should be considered comparable with other measurement data for similar DFS operating conditions .

Representativeness expresses the degree to which the sample data accurately and precisely represents the media being sampled at a specific location or condition and time. Representativeness was maintained by performing the sampling and analyses of the samples in accordance with the referenced methodologies and the DFS ATB QAPP. Therefore, the results presented in this DFS ATB Final Report are representative for the operating conditions of the DFS at time of sample collection.

Completeness is a measure of the amount of valid data obtained from an investigative program compared to the total amount of data collected. A completeness goal of 100% was presented in the DFS ATB QAPP. The completeness goal of 100% was achieved for all analytes and matrices with the exception of HRA metals in the HDC. Manganese was rejected due to extremely low matrix spike recovery. The rejection of manganese lowered the completeness of HRA metals in solid process streams to 97.5%.

6.6 AUDIT SAMPLE RESULTS

Audit samples were received for VOST, semi-volatile (XAD), PCB (XAD), total HRA metals, and energetic compounds. The results are shown in Tables 6-1 to 6-5.

TABLE 6-1. VOST AUDIT RESULTS

COMPOUND	Sample 1			Sample 2			Sample 3			Sample 4			Average ppb
	Volume:	8.50	Liters	Volume:	8.45	Liters	Volume:	8.37	Liters	Volume:	8.52	Liters	
	Tube 1 Amount ng	Tube 2 Amount ng	Total ppb	Tube 1 Amount ng	Tube 2 Amount ng	Total ppb	Tube 1 Amount ng	Tube 2 Amount ng	Total ppb	Tube 1 Amount ng	Tube 2 Amount ng	Total ppb	
December Audit													
Vinyl Chloride	740	1200	88	730	1100	83	720	1200	88	810	1200	91	88
1,1,1-Trichloroethane	3700	840	96	3300	1100	94	3800	910	102	4300	640	105	99
Carbon Tetrachloride	4700	920	103	4000	1300	98	4800	1000	108	5400	670	111	105
Benzene	2800	32	103	2600	220	103	2900	110	111	2900	13	105	105
1,2-Dichloroethane	3400	10	98	3200	180	97	3600	74	107	3700	0	106	102
Trichloroethene	4800	0	103	4400	140	98	4800	54	106	4600	0	99	102
Tetachloroethene	6100	0	104	6000	190	106	6400	61	112	5100	0	87	102
1,2-Dibromoethane	6300	0	95	6100	38	93	6700	0	103	6900	0	104	99
	Volume:	9.97	Liters	Volume:	9.97	Liters	Volume:	9.97	Liters	Volume:	9.97	Liters	
January Audit													
Chloromethane	0	200	9.6	0	270	13	0	100	4.8	0	230	11.1	9.6
Bromomethane	490	310	28	720	370	27.9	710	350	27.1	740	420	29.9	28.2
Trichlorofluoromethane	2700	1800	79.2	2700	1400	72.4	2600	1500	72.6	2800	1700	80.1	76.1
Methylene Chloride	2700	510	91.4	2700	430	89.4	2700	460	90.5	2800	430	92.9	91.1
1,2-Dichloropropane	5100	24	109.6	4800	32	103.8	4800	39	104.1	4700	12	101.9	104.9
Toluene	3800	17	100.1	3700	0	97.5	3600	0	95	3500	0	92.9	96.4
Chlorobenzene	4600	0	98.8	4400	0	94.9	4200	0	90.7	4400	0	95.5	95
Ethyl Benzene	4600	0	104.7	4400	0	100.6	4100	0	93.9	4300	0	99	99.6
o-Xylene	4400	0	100.2	4300	0	98.3	3800	0	87	4100	0	94.4	95
1,3-Butadiene	840	440	57.2	750	390	51.2	730	360	49	830	490	59.6	54.3

Table 6-2. DFS SEMIVOLATILE ORGANIC COMPOUND AUDIT RESULTS (METHOD 8270)

Deactivation Furnace System Agent Trial Burn

Parameters	Sample 1 ID # 18347 (ug/sample)	Sample 2 ID # 18346 (ug/sample)
Acenaphthene	55	ND
Acenapthylene	50	ND
Anthracene	52	ND
Benzo (a) anthracene	67	ND
Benzo (b) fluoranthene	64	ND
Benzo (k) fluoranthene	61	ND
Benzo (g,h,i) perylene	60	ND
Benzo (a) pyrene	63	ND
4-Bromophenyl phenyl ether	54	ND
Butyl benzyl phthalate	77	ND
bis (2-chloroethoxy)-methane	52	ND
bis (2-chloroethyl) ether	43	ND
2,2' - Oxybis(1-chloropropane)	46	ND
2-Chloronaphthalene	53	ND
4-Chlorophenyl phenyl ether	55	ND
Chrysene	73	ND
Dibenz (a,h) anthracene	64	ND
Di-n-butyl phthalate	57	ND
1,2- Dichlorobenzene	46	ND
1,3- Dichlorobenzene	45	ND
1,4- Dichlorobenzene	44	ND
Diethyl phthalate	63	ND
Dimethyl phthalate	56	ND
2,4 - Dinitrotoluene	58	ND
2,6 - Dinitrotoluene	57	ND
Di-n-octyl phthalate	72	ND
1,2-Diphenylhydrazine	69	ND
Diphenylamine	46	ND
Bis (2-ethylhexyl)-phthalate	69	ND
Fluoranthene	50	ND
Fluorene	57	ND
Hexachlorobenzene	50	ND
Hexachlorobutadiene	44	ND
Hexachloroethane	41	ND
Indeno (1,2,3-cd) pyrene	71	ND
Isophorone	53	ND
Naphthalene	48	ND
Nitrobenzene	47	ND
N-Nitrosodimethylamine	40	ND
N-Nitrosodiphenylamine	46	ND
N-Nitroso-di-n-propylamine	57	ND
Phenanthrene	59	ND
Pyrene	72	ND
1,2,4-Trichlorobenzene	46	ND

* Remainder of Appendix IX list were Non-Detect (ND).

TABLE 6-3. POLYCHLORINATED BIPHENYLS AUDIT RESULTS

Deactivation Furnace System Agent Trial Burn

Parameter	Sample 1 ID. 30-04146 (ng/sample)	Sample 2 ID. 30-04144 (ng/sample)	Sample 3 ID. 30-04145 (ng/sample)
Total Monochlorobiphenyls	ND	ND	ND
Total Dichlorobiphenyls	13	65	ND
Total Trichlorobiphenyls	9.8	56	ND
3,3', 4,4'- TetraCB	ND	ND	ND
3,4,4', 5- TetraCB	ND	ND	ND
Total Tetrachlorobiphenyls	21	110	ND
2,3', 4,4', 5- PentaCB	ND	ND	ND
2,3,3', 4,4'- PentaCB	10	49	ND
2,3,4,4', 5- PentaCB	ND	ND	ND
3,3', 4,4', 5- PentaCB	ND	60	ND
Total Pentachlorobiphenyls	17	140	ND
2,3,3', 4,4', 5- HexaCB	ND	ND	ND
2,3,3', 4,4', 5'- HexaCB	ND	ND	ND
2,3', 4,4', 5,5'- HexaCB	9.5	48	ND
3,3', 4,4', 5,5'- HexaCB	ND	ND	ND
Total Hexachlorobiphenyls	24	120	ND
2,3,3', 4,4', 5,5'- HeptaCB	14	79	ND
Total Heptachlorobiphenyls	14	79	ND
Total Octachlorobiphenyls	1.3	6.7	ND
Total Nonachlorobiphenyls	21	100	ND
DecaCB	ND	ND	ND

Note: Reporting Limit is 1 ng.

TABLE 6-4. TOTAL HRA METAL AUDIT RESULTS

Parameter	Detection Limit (ug)	Sample 1 ID. 18349 (ug/sample)	Sample 2 ID. 18350 (ug/sample)
Aluminum	7.5	17	12
Antimony	0.30	ND	1.3
Arsenic	0.30	ND	53
Barium	0.15	ND	9.2
Beryllium	0.15	ND	10
Boron	1.5	ND	ND
Cadmium	0.075	ND	9.8
Chromium	0.15	3.4	10
Cobalt	0.15	ND	9.6
Copper	0.15	ND	24
Lead	0.15	0.96	24
Manganese	0.15	ND	11
Mercury, FH	0.030	ND	ND
Nickel	0.15	ND	9.5
Phosphorus	7.5	ND	ND
Selenium	0.30	ND	20
Silver	0.075	ND	4.6
Thallium	0.15	ND	11
Tin	0.30	ND	2.0
Vanadium	0.75	ND	11
Zinc	0.30	0.41	51

TABLE 6-5. ENERGETIC COMPOUNDS AUDIT RESULTS

COMPOUND	091379-0045 ug	091379-0046 ug	091379-0047 ug
Nitroglycerin	9.5	4.6	5.7
2,4,6-Trinitrotoluene	110	81	110
RDX	91	67	100

7.0 CONCLUSIONS

Results from the DFS GB ATB have been summarized in this report. Sampling of the exhaust gas was conducted at the horizontal duct located between the induced draft fan and the common stack. Samples of the various process streams were conducted at the discharge of the pumps where possible for liquids and by core samples or scoops for the solid residue samples.

A total of four performance runs were conducted. The results of three of these performance runs were reported in this document. Run 2 was voided due to difficulties in maintaining proper sampling temperatures in two of the trains. Therefore, a Run 4 was conducted for the third successful performance run. Operational and process data were also collected during the runs.

Emissions of PM, HCl, Agent GB, and CO were all well within the State of Utah permit limits established for the DFS. Agent destruction exceeded the RCRA minimum DRE of 99.99 percent, with an average DRE that was greater than 99.9999 percent. Particulate emissions were well below the RCRA limits and the Air Approval Order limits, with an average rate of 8.5 mg/dscm at 7% O_2. The HCl emissions were below the PQL in the exhaust gas samples, with an average emission rate of <0.04 lbs per hour. Emission of metals were generally below the values used in the HRA, but three were slightly higher. Emission rates of PCBs were below the emission rates used in the HRA.

4505-TR-11
Final

1521

INCINERATION VERSUS NEUTRALIZATION

For

JOHNSTON ATOLL CHEMICAL AGENT DISPOSAL SYSTEM

U. S. ARMY ENGINEERS DIVISION
Huntsville, Alabama

CONTRACT DACA 87-81-C-0122
Deliverable 11

APRIL 23, 1982

By

Arthur D. Little, Inc.

HOLMES & NARVER, INC.
ENGINEERS-CONSTRUCTORS
999 TOWN & COUNTRY ROAD
ORANGE CALIFORNIA 92668

TABLE OF CONTENTS

	Page No.
List of Tables	iii
1. INTRODUCTION	1
2. SUMMARY	3
3. APPROACH	5
4. FINDINGS AND CONCLUSIONS	7
4.1 Feasibility of Destroying GB and VX by Incineration	7
4.2 Chemicals Consumption and Salts Production	9
4.3 Water Balance	9
4.4 Analysis of the Destruction of GB and VX by Incineration	9
4.5 Scrubbers	15
4.6 Cost Analysis	16
4.7 Impact on JACADS Schedule	21
4.8 Advantages of Incineration and Neutralization	22
4.9 Major Issues to be Considered in JACADS Design	22
APPENDICES	
A. CLASSIFIED INFORMATION	A-1
B. BASIC REACTIONS	B-1
C. MATERIAL BALANCES	C-1
D. INCINERATION OF AGENTS: DEVELOPMENT OF BACKGROUND DATA	D-1
E. INCINERATION OF AGENTS: METAL PARTS FURNACE	E-1
F. INCINERATION OF AGENTS: DEACTIVATION FURNACE	F-1
G. PHYSICAL & CHEMICAL PROPERTIES OF AGENTS	G-1
H. AIR POLLUTION CONTROL FOR INCINERATION OF GB AND VX	H-1
I. COST ESTIMATION FOR CHLORINE AND CAUSTIC DELIVERED TO JOHNSTON ISLAND	I-1
J. REFERENCES	J-1

LIST OF TABLES

		Page
1	Materials Balance	9
2	Composition of Flue Gas when Incinerating Agents	12
3	Typical Scenarios for Incinerating Agents	13
4	Metals Parts Furnace Design Conditions	14
5	Cost Differential when Incinerating Rather Than Neutralizing Agents @ JACADS	17
6	Analysis of Capital Costs for ADS	18
7	Munition Destruction Rates	20
8	Agent Destruction Rates	21

INCINERATION VERSUS NEUTRALIZATION

for

JOHNSTON ATOLL CHEMICAL AGENT DISPOSAL SYSTEM (JACADS)

1 INTRODUCTION

This report is Deliverable No. 11 under Contract DACA 87-81-C-0122, Johnston Atoll Chemical Agent Disposal System (JACADS) for the U.S. Army Engineer Division, Huntsville. The work was performed in accordance with the requirements of Scope of Work Subsection 5.3.9, Task 9 - Incineration versus Neutralization.

The objective of this study was to evaluate incineration versus neutralization for the destruction of chemical agents GB and VX. The evaluation was based upon methods used at the Chemical Agent Munition Disposal System (CAMDS) at Tooele Army Depot. At CAMDS, GB and VX are destroyed by neutralization after drainage from the munition. Thermal destruction of small amounts of residual agent in a deactivation furnace (DFS) or metal parts furnace (MPF) is used to ensure complete removal of the agent from hardware portions of the munitions.

Since incineration is a part of the CAMDS facility, the study was to be based on using these systems for destroying GB and VX thus negating the need for the neutralization system. In addition to determining the feasibility of destroying agents in the incineration system (including the scrubbing system), the impact of incineration on the JACADS processing schedule was to be determined.

2. SUMMARY

The objective of this study was to evaluate incineration versus neutralization for the destruction of chemical agents GB and VX. The evaluation was based upon methods used at the Chemical Agent Munition Disposal System (CAMDS) at Tooele Army Depot. At CAMDS, GB and VX are destroyed by neutralization after drainage from the munition. Thermal destruction of small amounts of residual agent in a deactivation furnace (DFS) or metal parts furnace (MPF) is used to ensure complete removal of the agent from hardware portions of the munitions.

Since incineration is a part of the CAMDS facility, the study was to be based on using these systems for destroying GB and VX thus negating the need for the neutralization system. In addition to determining the feasibility of destroying agents in the incineration system (including the scrubbing system), the impact of incineration on the JACADS processing schedule was to be determined.

The results of our analysis indicate that the incineration of GB and VX in the MPF is feasible. Only minor changes would be required to the furnace (to permit the introduction of agents). The design of the scrubbing system would have to be modified to remove the P_2O_5 formed during the incineration of GB and VX. The agent neutralization system will not be required if incineration is used.

The two MPF's specified in the Demilitarization Master Plan for Johnston Atoll Chemical Agent Disposal System (JACADS) can destroy agent at the required rate. Consequently the use of incineration will not be impact on the JACADS schedule.

Approximately $20 million can be saved if incineration is used to destroy the Johnston Atoll (JA) inventory.

3. APPROACH

In undertaking this study, we reviewed a large amount of data and reports which had been prepared by USATHAMA on the incineration of agents and met with personnel at Tooele Army Depot, Rocky Mountain Arsenal and Edgewood Arsenal. We also presented our method of analysis and interim findings at a TIMS meeting. During this assignment we worked closely with others working on various aspects of the JACADS Facilities Criteria Development, particularly the master plan and the air pollution control systems. Finally, using the above data and, when necessary, our best engineering judgment, we estimated the most probable processing rate for each munition type. In making these estimates, we took into consideration such parameters as temperature, air flow rates, auxiliary fuel rates, residence times in the incinerator, and the capabilities of the air pollution control system to handle the off-gases.

In preparing the various analyses, we sometimes made simplifying assumptions to facilitate the work. Such assumptions had no impact on the findings and conclusions. Examples of such assumptions were to consider heat losses negligible and assume reactions went to completion at the highest state of oxidation.

The results of the study are presented as summary findings and conclusions. The assumptions and analysis made to support these findings and conclusions are attached as a series of appendices. A separate appendix submitted under separate cover contains any classified information.

4. FINDINGS AND CONCLUSIONS

4.1 FEASIBILITY OF DESTROYING GB AND VX BY INCINERATION

USATHAMA has demonstrated that both GB and VX can be destroyed by incineration in both the laboratory and pilot plant. A summary of this work with an extensive bibliography is preented in Chemical System Laboratory's literature survey.[1] In this study the following typical values were presented:

Agent	Temperature °F	Residence Time Seconds	Destruction Efficiency (with Scrubbing) %
GB	2370	2.14	99.99995
VX	2370	1.79-2.11	99.999996

In addition, the destruction of GB had been demonstrated in challenge tests in both the Deactivation (DFS) and Metal Parts Furnaces (MPF). In the most recent tests[2], GB was incinerated in the DFS and MPF at rates of 2250 and 2760 cc/min, respectively. These rates are equivalent to 323 and 396 pounds per hour respectively.

No detectable quantities of GB were found in the stack gas. As a result, it was concluded that GB emission levels were far below the maximum level[3] of 0.0003 mg/m^3. Temperatures in the afterburners of the MPF and DFS were in the ranges 1800-2300°F and 1550-1730°, respectively.

On the basis of this experience a residence time of 2 seconds at 1600°F appears to be a reasonable design basis for the destruction of GB and VX. Further, experience to date indicates that agent GB could be burned in the deactivation or metals parts furnace.

A residence time of 1 second at 1600°F has been used for the incineration of H in the CAMDS MPF.[4]

4.2 CHEMICALS CONSUMPTION AND SALTS PRODUCTION

The amount of chemicals used and the salts produced vary by the method of destruction and type of agent destroyed. Table 1 shows chemicals consumption and salt production per unit of agent treated for the neutralization of GB and VX and the incineration of GB, VX, and H. Where appropriate, the quantities presented in the table are based on actual, not theoretical, considerations. For example, 5% excess caustic is allowed for the neutralization of GB. Notice that about twice as much caustic is required if GB is incinerated rather than neutralized. Less caustic and no chlorine are required if VX is incinerated.

4.3 WATER BALANCE

Wastewater results from the use of aqueous caustic solution for hydrolysis/neutralization and formation of water due to chemical reaction. Neutralization and incineration generate different quantities of process wastewater as shown in Table 1. At CAMDS no process wastewater is discharged to the environment; it is evaporated during salt drying. Because of the energy required for evaporation, minimizing the use of water in the plant is important.

It was assumed that all other operations in the plant (such as the use of decon solution, the pH, and concentration of salts in the scrubber effluent) remained essentially the same, independent of agent destruction method.

Therefore, the difference in wastewater evaporation load was estimated using the data presented in Table 1. For the inventory on Johnston Atoll (JA), more process wastewater must be evaporated if incineration rather than neutralization is used. However, more operating data, particularly on VX, will be required before the water balance can be fully analyzed.

4.4 ANALYSIS OF THE DESTRUCTION OF GB AND VX BY INCINERATION

We analyzed the use of the MPF for the destruction of GB and VX drained from munitions of all types and the use of the DFS for the destruction of GB and VX contained in rockets

TABLE 1

MATERIALS BALANCE

	Agent				
	GB		VX		H
	Incineration	Neutralization[a]	Incineration	Neutralization[c]	Incineration
Quantity of NaOH (#/#)	1.143	0.600	0.899	1.615	1.006
Quantity of Cl_2 (#/#)	-	-	-	1.037	-
Quantity of Salts (#/#)	1.471	1.472	1.464	3.322	1.629
Quantity of Water (#/#)[b]	6.107	2.862	5.174	7.687	5.262
Combustion Air[d] (SCF/#)	79.5		131.2		75.2
Flue Gas[d] (SCF/#)	88.5		140.3		83.1

a. 5% excess NaOH.
b. Water added with 18% by weight caustic solution and the water formed in the chemical reactions.
c. 30% excess Cl_2 and 10% excess NaOH.
d. Based on theoretical analysis assuming stoichiometric combustion of the agent, only, with air.

The MPF was selected over the DFS for the incineration of drained agent for the following reasons:

- Reduced auxiliary fuel consumption;
- A larger fume/afterburner (600 ft^3 versus 200 ft^3);
- Potential excursions in the DFS while burning explosives and propellants with agent;
- Possible contamination of the particulates removed from the cyclone preceding the afterburner in the DFS; and
- The MPF was designed to burn H in the CAMDS facility, and therefore had a superior configuration for burning agents.

The agent was assumed to be drained from the munitions prior to incineration rather than incinerated with the munitions as is done with H. We prefer to drain the agents prior to incineration 1) to allow the agent to be introduced at a controlled, uniform rate, 2) to allow the rate of agent incineration to be independent of rate of metal part decontamination, and 3) to avoid the inventory of large quantities of hot agent in the MPF as it represents a potential safety hazard.

It was assumed that the agents would be introduced into the furnace through a feed system consisting of a pump, piping and a flow controller. The agent would be discharged on a hot metal surface of a container in the volatilization chamber. It was further assumed that this container could be installed so as not to interfere with decontamination of metal parts. In other words, metal parts would be decontaminated and agent incinerated concurrently.

Alternately, the hot metal container could be replaced with an atomizing spray nozzle. We selected the hot metal container because of its higher reliability. The spray nozzle would be more susceptible to plugging and coking and might create droplets large enough to carry over through the fume chamber.

It was assumed that the fume burner would operate at 2100°F. This temperature was assumed to allow for the fact that heat losses had been assumed to be negligible and because mass flows are reduced at higher temperature and residence times are increased. Further, higher temperatures favor improved destruction efficiency.

In making the analysis, the JACADS schedule showed that the incineration of agent from bulk containers would most likely place the greatest demand on the furnace in terms of agent destruction rate. When burning the contents of a ton container in four hours, it is necessary to burn GB and VX at rates of 375 and 400 lbs/hour, respectively.

Table 2 shows the flue gas composition when operating under these conditions and Table 3 shows the temperature, flue gas flow rate, residence time, air requirements and heat input including auxiliary fuel. To provide a basis for comparison, the burning of a ton container of H in four hours (a rate of 425 lbs/hr) and fuel only are shown. The amount of flue gas generated and the combustion air requirements are higher when incinerating GB or VX rather than H. Incinerating VX generates the most flue gas and requires the largest quantity of air. In all cases, however, the furnace is operating within the design parameters of the furnace shown in Table 4.

Using these furnace design parameters, the maximum rate at which agent could be burned in a single MPF was also estimated. Either a heat release of 8.3 MM Btu/hr or a gas residence time of 2 seconds limits capacity. The results are shown below:

	Max. Agent Destruction Rate #/hr	
	GB	VX
Heat Release Limited	735	488
Residence Time Limited	642	420

The maximum rate of destruction of BX is lower because it has a higher heat of combustion.

If greater rates are desired, it would be necessary to increase the volume of the fume chamber.

At JACADS, which is a 2,2,2,2 facility, the above rates would be doubled.

The incineration of agent-filled rockets in the DFS was also analyzed. This scenario was of interest because of the possibility of treating agent-filled rockets by shearing and direct feeding by gravity to the deactivation furnace. In making this analysis, it was assumed that

TABLE 2

COMPOSITION OF FLUE GAS WHEN INCINERATING AGENTS[a]

(Volume Percent)

	Metal Parts Furnace				Deactivation Furnace[c]		
	GB	VX	H	Fuel[b]	GB	VX	Fuel[b]
CO_2	5.13	4.83	5.36	5.80	5.78	5.61	5.80
H_2O	5.67	5.51	4.88	6.21	5.82	5.75	6.21
N_2	76.16	76.76	76.01	76.56	75.38	75.72	76.56
O_2	12.08	12.23	11.73	11.43	12.62	12.60	11.43
HCl	-	-	1.34	-	-	-	-
HF	0.65	-	-	-	0.26	-	-
SO_2	-	0.27	0.68	-	-	0.13	-
P_2O_5	0.31	0.13	-	-	0.14	0.06	-
NO_2	-	0.27	-	-	-	0.13	-
	100.00	100.00	100.00	100.00	100.00	100.00	100.00

a. Temperature of incineration is 2100°F.
b. When burning fuel only (provided as a reference point).
c. Assumed explosives and propellants burn to CO_2, H_2O, N_2, and O_2.

TABLE 3

TYPICAL SCENARIOS FOR INCINERATING AGENTS

	METAL PARTS FURNACE[a]				DEACTIVATION FURNACE[b]		
	H	GB	VX	FUEL[c]	GB	VX	FUEL[c]
Agent Burning Rate (#/hr)	425	375	400	0	214	204	0
Temperature @ Fume Chamber Outlet (°F)	2,100	2,100	2,100	2,100	2,100	2,100	2,100
Flue Gas Flow Rate @ Outlet							
ACFM	12,300	12,900	17,400	13,800	17,800	19,700	23,400
SCFM	2,370	2,470	3,340	2,660	3,420	3,780	4,500
Residence Time (seconds)	2.9	2.8	2.1	2.6	0.7	0.6	0.5
Air Requirements (SCFM)							
Combustion[d]	960	960	1,300	1,120	1,210	1,350	1,890
Dilution	1,320	1,420	1,950	1,460	2,060	2,270	2,470
TOTAL	2,280	2,380	3,250	2,580	3,270	3,620	4,360
Heat Input (MM Btu/hr)							
Fuel	2.9	2.9	2.9	7.1	5.5	5.5	12.0
Agent	3.4	3.8	6.1	0.0	2.2	3.2	0.0
Explosives & Propellants	0.0	0.0	0.0	0.0	1.5	1.5	0.0
TOTAL	6.3	6.7	9.0	7.1	9.2	10.2	12.0

a. Burning the agent in one ton containers in four hours.
b. Burning 20 rockets per hour containing agent, explosive, and propellant.
c. When firing fuel only at the design rate of the burners (provided as a point of reference).
d. For agent, fuel, and, where appropriate, explosive and propellant.

TABLE 4

METALS PARTS FURNACE
DESIGN CONDITIONS

Agent Destruction Rate	1,035#/hr
Residence Time	1 second @ 1600°F
Primary Fume Burner	Rated[a]
Mustard Vapor Rate #/hr	1,035
Heat Release MM Btu/hr	8.3
Combustion Air scfm	4,140
Fuel	
Start-up gph	20
Auxiliary gph	4
Burner Air scfh	17,600
Furnace Volume ft^3	300
Auxiliary Fume Burner	
Flue Gas Flow	5,350
Heat Input MM Btu/hr	0.5
Fuel	
Start-up gph	5
Auxiliary gph	4
Burner Air scfh	4,400
Furnace Volume ft^3	300

a. Rated is defined as the capacity which the vendor would be willing to guarantee.

Source: Reference 4.

rockets were processed at a rate of 20 per hour and that GB and VX rocket contained 10.7 and 10.2 lbs of agent, respectively. It was assumed that the furnace would be operated under that same condition whether or not agent-filled rockets were being incinerated except that less auxiliary fuel would be burned.

The results of this analysis, shown in Tables 2 and 3, show the flue gas composition and other parameters of temperature, flue gas quantities, residence time, air requirements and heat input including auxiliary fuel.

The residence time in the slagging afterburner is only 0.6 to 0.7 seconds which is much lower than the 2-second time specified in the demilitarization master plan. However, challenge tests have shown complete agent destruction within detectable limits can be achieved at these residence times. A larger slagging afterburner could be provided to increase the residence time.

4.5 SCRUBBERS

In most agent-burning tests, the scrubbers have not performed well, particularly when operating at full capacity. In particular, P_2O_5 emissions have been a problem.

Most of these problems are the result of operating the scrubbers outside the original design criteria. For example, neither the MPF nor DFS scrubbing systems were designed to remove the P_2O_5 generated when burning large quantities of GB or VX.

Scrubbers can be designed to reduce these emissions to acceptable levels. P_2O_5 emissions could be controlled by increasing the pressure drop across the venturi or adding a mist eliminator. Acid gases such as HF, HCl, and SO_2 will be removed by reaction with a caustic. Effective removal of these gases can be accomplished in a system which will remove the P_2O_5.

Caustic consumption in the scrubber caused by the neutralization of CO_2 has also been a concern. The consumption of caustic in CO_2 neutralization is not impacted by whether or not agent is incinerated, but by pH.

At high pH, large amounts of caustic will be consumed due to CO_2 neutralization. At lower pH (particularly less than 7), caustic consumption due to the neutralization of CO_2 can be eliminated while still removing the acid gases such as HF, HCl, SO_2, and P_2O_5 to acceptable levels (that is, meeting the regulatory emission requirements). The design of the scrubbers and caustic usage are discussed in greater detail in the report[6] on pollution control systems. The brine from the scrubbers will be sent to salt drying.

4.6 COST ANALYSIS

Both capital and operating costs will be affected if agent is incinerated rather than neutralized. In making this analysis, we estimated costs on a differential basis, that is which costs will be greater or less when using incineration rather than neutralization.

The estimated overall cost differential when incinerating agent is presented in Table 5. Cost differentials are divided into three categories-capital costs, operating costs (for the destruction of the JA inventory) and other possible operating costs. This third category is presented separately because the savings forecast are possible, but further experience at CAMDS would be required to confirm them.

The total cost savings when burning agents in two JACADS MPFs rather than neutralizing them is $19,591,000. Of these savings, $16,877,000 are attributed to capital cost savings and $2,714,000 to savings in operating costs. In addition, further savings may be realized by reducing operating labor or fuel use. No other utilities savings are believed to be significant as electricity and water use in the neutralization of agents are small. We estimated that about $134/hour could be saved when the two MPFs are operating by reducing operating labor by four people and reducing fuel consumption by 4MM Btu/hr.

The reduction in capital cost is because the GB and VX neutralization systems are not required if the agents are incinerated; all that is required is the treatment of wastewaters and decon solutions, and salt drying. The basis for estimating the reduction in cost of ADS is shown in Table 6. Cost increases will result for the need 1) to install a system to feed

TABLE 5

COST DIFFERENTIAL WHEN INCINERATING AGENT IN TWO MPFs ($1,000)

A. Capital Costs		
Cost Reduction		
Smaller ADS	18,101	
Cost Additions		
Modifications to MPFs(2) to allow burning of Neat Agent (allowance)	134	
Modifications to MPF Scrubbing Systems (assuming the use of Brinks mist eliminators)	1,090	
	1,224	
Net Cost Reduction		16,877
B. Operating Costs (Total for JI Inventory)		
Cost Reduction		
Reduced CL_2 Use	183	
Reduced Salt Disposal Cost	278	
Reduced Maintenance Cost		
5% of $16,877,000/yr for 3 years	2,532	
	2,993	
Cost Additions		
Increased NaOH Use	159	
Increased Water Evaporation Load	120	
	279	
Net Cost Reduction		2,714
C. Total Cost Savings		19,591

D. Other Possible Operating Cost Savings[a] (on an hourly basis)	$/hr/MPF
Operating Labor (2 men) 2 x $23/hr	46
Fuel - 2.0 MM Btu/hr x $10.70/MM Btu	21

a. When burning GB or VX.

Source: Reference 6.

TABLE 6

ANALYSIS OF CAPITAL COSTS FOR ADS

A. Reduction in Capital Cost of ADS if Neutralization is Eliminated

	Cost of ADS[a]	
	With Agent Destruction	Without Agent Destruction
	$1,000	$1,000
Site Development	240	180
Process Buildings	320	240
Tanks	3,067	876
Pump	310	116
Heat Exchangers	233	21
Reactors	797	0
Fans & HVAC	160	160
Miscellaneous Equipment	772	772
Installation	1,035	800
Testing	214	160
Documentation and Data	354	266
	7,502	3,591

% Reduction in Cost: $\frac{\$7,502-\$3,591}{7,502} = 52\%$

B. Reduction in Cost of JACADS ADS Without Agent Destruction

$$\$34,810,000^{20} \ (0.52) = \$18,101,000$$

a. Data supplied by USATHAMA modified to reflect operations @ JACADS.

Source: Reference 7.

agent to the MPF and 2) to upgrade the scrubbing system. If all wastewaters and decon solutions were incinerated, fuel usage would increase and it may be necessary to reduce the capacity of the furnaces to burn agents because of the increased gas flow.

Reductions in operating cost will result from the reduced use of chlorine, the reduced production of salts, and reduced maintenance in the ADS. Chlorine prices are based on recent price quotations and on allowance for transportation to Johnston Atoll (JA). The bases for estimating the cost reductions or increases for caustic, chlorine, salts, and water are presented in Appendix A.

Less salt is produced when using incineration to destroy agents. As a result, the cost of drumming the salts, shipping them to the U.S. mainland, and disposing of them in a commercially operated secure landfill are reduced. Reduced maintenance costs result from a lower cost less complex ADS.

Cost increases, when using incineration to destroy agents, are caused by the increased use of caustic and an increased water evaporation load. The added cost for caustic is based on recent price quotations and an allowance for transportation to JA.

The added cost to evaporate water is small. Further, the water balance is still somewhat uncertain as experience in neutralizing VX is limited. As better data is available, savings due to the reduced need to evaporate water should be reviewed.

Other cost savings are possible. Less labor may be required if GB and VX are incinerated instead of neutralized. Further, fuel savings in the MPF and DFS should be reduced if GB and VX are incinerated. Both agents have significant heats of combustion (10,070 Btu/# for GB and 15,170 Btu/# for VX) compared to fuel oil (19,500 Btu/#). As a result, the burning of agents in a uniform, controlled manner should reduce fuel requirements while maintaining proper temperature control. This reduction has been reported at CAMDS when conducting the challenge tests to burn GB in the DFS.

TABLE 7

MUNITION DESTRUCTION RATES[a]

		Units/hr		Actual Agent Destruction Rate	
GB	#Agent/Unit	Design[b]	Actual[c]	#/hr	#/min
115 mm Rocket	10.7	20	10	107	1.78
105 mm Cartridge	1.6	50	25	40	0.67
155 mm Projectile	6.5	32	20	130	2.17
8 inch Projectile	14.5	20	20	290	4.83
750# Bomb	220.0	1.2	1.2	264	4.40
Ton Container	1500.0	0.25	0.2	300	5.00
500# Bomb	108.0	1.2	1.2	129.6	2.16
VX					
115 mm Rocket	10.2	20	10	102	1.7
155 mm Projectile	6.0	32	20	120	2.0
Mine	10.5	40	30	315	5.25
Ton Container	1600.0	0.	0.2	320	5.33
8 inch Projectile	14.5	20	20	290	4.83
H					
Mortar Cartridge (HD)	6.0	50	25	150	2.5
155 mm Projectile (H&HD)	11.7	32	20	234	3.90
Ton Container (HD)	1700.0	0.25	0.2	340	5.67
105 mm Cartridge	2.97	50	25	74.25	1.24

a. For a single MPF (1xCAMDS).
b. Design rate is the rate presented in the Final Demilitarization Plan, dated 9/78.
c. Actual rate is the rate estimated by ADL based on experience at CAMDS to date. It is the rate used to determine the master plan for destruction of the JI inventory.

Source: Reference 7.

4.7 IMPACT ON JACADS SCHEDULE

Munition processing rates are presented in Table 7. Two rates are shown--the design rate and the actual rate. The design rate is the rate used in designing the CAMDS facility. The actual rate is ADL's estimated rate after reviewing experience to date at CAMDS. In most cases, the rate is less than the design rate. The actual rate was used in developing the demilitarization master plan.

Table 8 shows the maximum agent destruction rates required to meet the schedule developed in the demilitarization master plan by munition type at both the design and actual rates. The reason for showing both rates is to provide perspective as to the adequacy of the MPF to incinerate agent if the design rates are achieved in the JACADS facility. The rates shown are for a single MPF; two MPFs will be installed at JA.

TABLE 8

AGENT DESTRUCTION RATES

	At Design Rate		At Actual Rate	
Agent	Munition Type	Destruction Rate #/hr	Munition Type	Destruction Rate #/hr
GB	Ton Container	375	Ton Container	300
VX	Mine	420	Ton Container	320
H	155mm Projectile	374.4	Ton Container	340

The maximum rates for burning GB and VX are 642 and 420 lbs/hr, respectively. The maximum rate for burning H is 1,035 lbs per hour, assuming a one-second residence time as shown in Table 4.

Based on the above analysis, it does not appear that incinerating agents rather than neutralizing agents will have any material impact on schedule. It appears that other operations such as rocket disassembly or projectile pull and drain presently limit processing rates.

4.8 ADVANTAGES OF INCINERATION AND NEUTRALIZATION

The advantages of incineration and neutralization can be summarized as follows:

- Advantages of Incineration

  All salts will most likely be inorganic;

  Recombination of salts to form agents not probable;

  Quantity of salts generated is less;

  No chlorine used;

  Elimination of GB and VX neutralization systems;

  Lower capital costs;

  Lower operating costs;

  Potential to save fuel; and

  Potential to save operating labor.

- Advantages of Neutralization

  Less caustic used; and

  Less water evaporated.

4.9 MAJOR ISSUES TO BE CONSIDERED IN JACADS DESIGN

Two major factors to consider in the design of the MPF and DFS system are:

- The control of air inleakage; and
- The conservation of fuel.

Excess air inleakage results in excess fuel consumption, reduced residence time in the fume chambers and afterburners, and the need for larger and more efficient scrubbing systems which will increase both capital and operating costs.

All agents being incinerated have relatively high heats of combustion. Minimal fuel should be required during steady state operations. It has been reported that burner systems at CAMDS have caused operating problems, especially operating at a low firing rate. If these problems cannot be solved, perhaps a two burner system should be considered to improve operation during periods when only minimal fuel is required to ensure ignition.

Other issues which should be considered are:

- The residence time in the DFS slagging afterburner;
- The effect on DFS operating excursions when burning agent with explosives and propellants;
- The water balance;
- Design of the scrubber system; and
- The complete destruction of organic salts during incineration.

The first two of these issues concern the destruction efficiency, safety, and reliability of burning agents in the DFS. The water balance will only affect the amount of water to be evaporated and its resultant cost. Needs for the design of the scrubber system are discussed in the study on pollution control systems.[6] If complete destruction of organic salts can be achieved (the results to date are inconclusive), the possibility of recombination of the salts to form nerve agent would be eliminated.

APPENDICES

Appendix A

CLASSIFIED INFORMATION

[Submitted under separate cover]

Appendix B

BASIC REACTIONS

Destruction of GB

A. INCINERATION

1. Oxidation Reaction

$$2C_4H_{10}O_2PF + 13O_2 \rightarrow 8CO_2 + 9H_2O + P_2O_5 + 2HF$$

2. Neutralization Reaction

$$2HF + P_2O_5 + 8NaOH \rightarrow 2NaF + 2Na_3PO_4 + 5H_2O$$

3. Overall Reaction

	$2C_4H_{10}O_2PF$	$+ 13O_2$	$+ 8NaOH$	$\rightarrow 8CO_2$	$+ 14H_2O$	$+ 2NaF$	$+ Na_3PO_4$
mols(mol wt)	2(140)	13(32	8(40	8(44)	14(18)	2(42)	2(164)
#/#GB	1.000	1.486	1.143	1.257	0.900	0.300	1.171

B. CHEMICAL NEUTRALIZATION

	$C_4H_{10}O_2PF$	$+ 2NaOH$	$\rightarrow NaF$	$+ H_2O$	$+ C_4H_{10}O_3PNa$
mols(mol wt)	1(140)	2(40)	1(42)	1(18)	1(160)
#/#GB	1.000	0.571	0.300	0.129	1.143

Destruction of VX

A. INCINERATION

1. Oxidation Reaction

$$2C_{11}H_{26}O_2\ PSN + 39\ 1/2O_2 \rightarrow 22CO_2 + 26H_2O + 2SO_2 + 2NO_2 + P_2O_5$$

2. Neutralization Reaction

$$2SO_2 + 2NO_2 + P_2O_5 + 1\ 1/2O_2 + 6H_2O \rightarrow 2H_2SO_4 + 2HNO_3 + 2H_3PO_4$$

$$12NaOH + 2H_2SO_4 + 2HNO_3 + 2H_3PO_4 \rightarrow 2Na_2SO_4 + 2NaNO_3 + 2Na_3PO_4 + 12H_2O$$

3. Overall Reaction

$$2C_{11}H_{26}O_2PSN + 41O_2 + 12NaOH \rightarrow 22CO_2 + 32H_2O + 2Na_2SO_4 + 2NaNO_3 + 2Na_3PO_4$$

mols(mol wt)	2(267)	41(32)	12(40)	22(44)	32(18)	2(142)	2(85)	2(164)
#/#VX	1.000	2.457	0.899	1.813	1.079	0.532	0.318	0.61[illegible]

B. CHEMICAL NEUTRALIZATION

1. Chlorolysis

$$C_{11}H_{26}O_2PSN + 3Cl_2 + 4H_2O \rightarrow C_3H_9O_3P + C_8H_{19}O_3SN + 6HCl$$

2. Neutralization

$$C_3H_9O_3P + C_8H_{19}O_3SN + 6HCl + 8NaOH \rightarrow C_3H_8O_3PNa + C_8H_{18}O_3NaSN + 6NaCl + 8H_2O$$

3. Overall

$$C_{11}H_{26}O_2PSN + 3Cl_2 + 8NaOH \rightarrow C_3H_8O_3PNa + C_8H_{18}O_3NaSN + 6NaCl + 4H_2O$$

mols(mol wt)	1(267)	3(71)	8(40)	1(146)	1(231)	6(58.5)	4(18)
#/#VX	1.000	0.798	1.199	0.547	0.865	1.315	0.270

Destruction of H

A. INCINERATION

1. Oxidation Reaction

$$C_4H_8Cl_2S + 6\ 1/2O_2 \rightarrow 4CO_2 + SO_2 + 2HCl + 3H_2O$$

2. Neutralization Reaction

$$SO_2 + 1/2O_2 + 2HCl + 4NaOH \rightarrow Na_2SO_4 + 2NaCl + 3H_2O$$

3. Overall Reaction

	$C_4H_8Cl_2S$	$+\ 7O_2$	$+\ 4NaOH$	$\rightarrow\ 4CO_2$	$+\ Na_2SO_4$	$+\ 2NaCl$	$+\ 6H_2O$
mols(mol wt)	1(159)	7(32)	4(40)	4(44)	1(142)	2(58.5)	6(18)
#/#H	1.000	1.409	1.006	1.107	0.893	0.736	0.679

Appendix C

MATERIAL BALANCES

A. DESTRUCTION OF GB

1. Incineration

- Caustic Use: #/#GB

  1.143

- Salts Generation: #/#GB

NaF	0.300
Na_3PO_4	1.171
	1.471

- Water Remaining After Reaction #/#GB

Water of Reaction	0.900
Water with Caustic $1.143\left(\frac{82}{18}\right)$ =	5.207
	6.107

Notes: Caustic is added as an 18% by weight solution in water.

Salts would be discarded as a 19.4% by weight solution without added water.

- Theoretical Quantity of Air Required for Combustion

			mols/mol GB
O_2	13/2	=	6.5
N_2	$6.5\left(\frac{79}{21}\right)$	=	24.5
Air		=	31.0

SCF Air/#GB: $\frac{31.0 \times 359}{140}$ = 79.5SCF

Note: Air is 21% by volume O_2 and 79% by volume N_2

1 mol equals 359 SCF (1 atm and 32°F)

- Quantity of Flue Gas Generated During Combustion

	mols/mol GB
CO_2	4
H_2O	4.5
P_2O_5	0.5
HF	1.0
N_2	24.5
	34.5

SCF of Flue Gas/#GB

$$\frac{34.5 \times 359}{140} = 88.5 \text{ SCF}$$

2. Chemical Detoxification

- Caustic Use (#/#GB)

  0.571 (1.05) = 0.600

  Note: 5% excess caustic is added to drive the reaction to completion

- Salts Generation (#/#GB)

NaF	0.300
$C_4H_{10}O_3PNa$	1.143
Excess Caustic (0.600 - 0.571)	0.029
	1.472

- Water Present After Reaction (#/#GB)

Water of Reaction	0.129
Water with Caustic $0.600\left(\frac{82}{18}\right)$ =	2.733
	2.862

Notes: Caustic is added as an 18% by weight solution in water.

Salts would be discarded as a 34.0% by weight solution without added water.

B. DESTRUCTION OF VX

1. Incineration

- Caustic Use (#/#VX)

  0.899

- Salts Generation (#/#VX)

Na_2SO_4	0.532
$NaNO_3$	0.318
Na_3PO_4	0.614
	1.464

- Water Remaining After Reaction (#/#VX)

Water of Reaction	1.079
Water with Caustic $0.899\left(\frac{82}{18}\right)$ =	4.095
	5.174

Notes: Caustic is added as an 18% by weight solution in water.
Salts would be discarded as a 22.1% by weight solution without added water

- Theoretical Quantity of Air Required for Combustion

		Mols
Mols O_2/Mol VX : 41/2	=	20.5
Mols N_2/Mol VX : $20.5\left(\frac{79}{21}\right)$	=	77.1
Mols Air/Mol VX		97.6
SCF of Air/#VX $\frac{97.6 \times 359}{267}$	=	131.2 SCF

- Quantity of Flue Gas After Combustion

	mols/mol VX
CO_2	11
H_2O	13
SO_2	1
NO_2	1
P_2O_5	0.5
O_2	0.75
N_2	77.1
	104.35

SCF of Flue Gas/#VX

$$\frac{104.35 \times 359}{267} = 140.3\text{SCF}$$

2. Chemical Detoxification

- Chlorine Use #/#VX

  0.798 x 1.30 = 1.037

  Note: 30% excess chlorine is added to drive the reaction to completion.

- Caustic Use: #/#VX

Neutralization of VX	1.199
Neutralization of Cl_2	0.269
	1.468
Excess Caustic @ 10%	.147
	1.615

- Neutralization of Excess Cl_2:

  1.037-0.798 = 0.239# of excess CL_2 to be neutralized

	Cl_2	+ 2NaOH →	NaOCl	+ NaCl	+ H_2O
mols(mol wt)	1(71)	2(40)	1(74.5)	1(58.5)	1(18)
#/#Cl_2	1.000	1.127	1.049	0.824	0.254
	239	0.269	0.251	0.197	0.060

- Salts Generation

	#/#VX
$C_3H_8O_2PONa$	0.547
$C_8H_{18}NSO_3Na$	0.865
NaCl (1.315 + 0.197)	1.512
NaOCl	0.251
NaOH(1.615 - 1.468)	0.147
	3.322

- Water Remaining After Reaction

	#/#VX
Neutralization of VX	0.270
Neutralization of Cl_2	0.060
Water added with caustic $1.615\left(\frac{82}{18}\right)$	= 7.357
	7.687

Notes: Caustic is added as an 18% by weight solution in water.

Salts would be discarded as a 30.2% by weight solution without added water.

C. DESTRUCTION OF H BY INCINERATION

- Caustic Use (#/#H)

  1.006

- Salts Generation: (#/#H)

Na_2SO_4	0.893
NaCl	0.736
	1.629

- Water Remaining After Reaction (#/#H)

Water of Reaction	0.679
Water with Caustic $1.006\left(\frac{82}{18}\right) =$	4.583
	5.262

Note: Caustic is added as an 18% by weight solution in water.

Salts would be discarded as a 23.6% by weight solution without added water.

- Theoretical Quantity of Air Required for Combustion

		mols/mol H
O_2		7.0
N_2	$7\left(\frac{79}{21}\right)$ =	26.3
Air		33.3
SCF Air/# H	$\frac{33.3 \times 359}{159}$	75.2 SCF

Note: Air is 21% by volume O_2 and 79% by volume N_2

1 mol equals 359 SCF (1 atm & 32°F)

- Quantity of Flue Gas Generated During Combustion

	mols/mol H
CO_2	4
SO_2	1
HCl	2
H_2O	3
O_2	0.5
N_2	26.3
	36.8

SCF of Flue Gas/#H

$$\frac{36.8 \times 359}{159} = 83.1 \text{ SCF}$$

Appendix D

INCINERATION OF AGENTS

Development of Background Data

Overall Assumptions:

Baseline Temperature	70°F
Incineration Temperature	2100°F

Air is 23.3% by weight O_2 and
76.7% by weight N_2

A. INCINERATION OF GB

Assumptions: Heat of Combustion of GB = 10,070 Btu/#

- Flue Gas Generated from Burning One mol of GB

	mols	#
CO_2	4	176
H_2O	4.5	81
P_2O_5	0.5	71
HF	1	20
N_2	24.5	686
	34.5	1,034

Flue Gas/#GB 1034/140 = 7.39

Dilution Air Required to Maintain Temperature @ 2100°F with a flue gas having a specific heat of 0.274 Btu/# °F

$$10{,}070 = \chi(.274)\ (2100-70)$$

$$18.10 = \chi \text{(where } \chi \text{ equals the quantity of flue gas/\# GB)}$$

#dilution air/#GB = 18.10-7.39 = 10.71

Mols Dilution Air/Mol GB:

O_2 10.71 (.233) (140) / 32 = 10.9

N_2 10.71 (.767) (140) / 28 = 41.1

- Total Flue Gas Composition in burning one mol of GB @ 2100°F

	mols/mol GB
CO_2	4
H_2O	4.5
P_2O_5	0.5
HF	1
N_2	65.6
O_2	10.9
	86.5

B. INCINERATION OF VX

Assumptions: Heat of Combustion of VX = 15,170 Btu/#

- Flue Gas Generated From Burning one mol of VX

	mols	#
CO_2	11	484
H_2O	13	234
SO_2	1	64
NO_2	1	46
P_2O_5	0.5	71
O_2	0.75	24
N_2	77.1	2,159
	104.35	3,082

Flue Gas/#VX 3082/267 = 11.54

Dilution Air Required to Maintain Temperature @ 2100°F with a flue gas having a specific heat of 0.272 Btu/# °F

$$15{,}170 = \chi(.272)\ (2100-70)$$

$$27.47 = \chi \text{(where } \chi \text{ equals the quantity of flue gas/\# VX)}$$

#dilution air/#VX 27.47-11.54 = 15.93

Mols Dilution Air/Mol VX

O_2 15.93 (.233) (267) / 32 = 31.0

N_2 15.93 (.767) (267) / 28 = 116.5

Total Flue Gas Composition in burning one mol of VX @ 2100°F

	mols/mol VX
CO_2	11
H_2O	13
SO_2	1
NO_2	1
P_2O_5	0.5
O_2	31.75
N_2	193.6
	251.85

C. INCINERATION OF H

Assumption: Heat of Combustion of H = 8010 Btu/#

- Flue Gas Generated from Burning One mol of H

	mols	#
CO_2	4	176
SO_2	1	64
HCl	2	73
H_2O	3	54
O_2	0.5	16
N_2	26.3	736
	36.8	1,119

Flue Gas/# Agent: 1119/159 = 7.04

Dilution Air Required to Maintain Temperature @ 2100°F with a flue gas having a specific heat of 0.265 Btu/# °F

$$8010 = \chi(.265)\ (2100-70)$$

$$14.89 = \chi \text{(where } \chi \text{ equals the quantity of flue gas/\# agent)}$$

#dilution air/#agent= 14.89-7.04 = 7.85

Mols Dilution Air/Mol Agent:

O_2 : 7.85 (.233) (159) / 32 = 9.1 mols

N_2 : 7.85 (.767) (159) / 28 = 34.2 mols

- Total Flue Gas Composition in burning one mol of H @ 2100°F

	mols/mol H
CO_2	4
SO_2	1
HCl	2
H_2O	3
O_2	9.6
N_2	60.5
	80.1

D. COMBUSTION OF FUEL OIL

Assumptions: Composition of Fuel Oil: $C_{14}H_{30}$

Heat of Combustion of Fuel Oil = 19,500 Btu/#

- Combustion of Fuel Oil:

	$C_{14}H_{30}$ +	21 1/2 O_2 →	$14CO_2$ +	$15H_2O$
mols/mol wt	1(198)	21 1/2(32)	14(44)	15(18)

N_2 added with O_2 21.5(79/21) = 80.9 mols

Flue Gas Generated From Burning one mol of fuel

	mols	#
CO_2	14	616
H_2O	15	270
N_2	80.9	2,265
	109.9	3,151

#Flue Gas/#Fuel 3151/198 = 15.91

At a temperature of 2100°F and assuming a specific heat of 0.274 for the flue gas, the dilution air required is:

$19{,}500 = (\chi)\ (.274)\ (2100-70)$

$35.06 = \chi$ (where χ equals the quantity of flue gas/#agent)

dilution air/# fuel 35.06-15.91 = 19.15

Mols Dilution Air/Mol Fuel Burned:

O_2 : 19.15 (.233) (198) / 32 = 27.6

N_2 : 19.15 (.767) (198) / 28 = 103.9

- Composition of Flue Gas from Fuel Burning @ 2100°F

	mols/mol of fuel	mols/MM Btu of fuel
CO_2	14	3.6
H_2O	15	3.9
N_2	184.8	47.9
O_2	27.6	7.2
	241.4	62.6

Btu/mol fuel 19,500 (198) = 3,860,000

E. COMBUSTION OF EXPLOSIVE

Assumptions: Composition of Explosive: $C_6H_2(CH_3)(NO_2)$,

Heat of Combustion of Explosive = 6510 Btu/#

$$C_6H_2(CH_3)(NO_2)_3 + 5\text{-}1/4\ O_2 \rightarrow 7CO_2 + 2\text{-}1/2\ H_2O + 1\text{-}1/2\ N_2$$

mols(mol wt) 1(227) 5-1/4(32) 7(44) 2-1/2(18) 1-1/2(28)

N_2 added with O_2 5-1/4(79/21) = 19.75 mols

- Flue Gas Generated from Burning one mol of explosive

	mols	#
CO_2	7	308
H_2O	2.5	45
N_2	21.25	595
	30.75	948

#Flue Gas/# Explosive = 948/227 = 4.18

At a temperature of 2100°F and assuming a specific heat of 0.27 for the flue gas, the dilution air required is:

$$6.510 = (\chi)\ (0.27)\ (2100-70)$$

$$11.88 = \chi \text{(where } \chi \text{ equals the quantity of flue gas/\# explosive)}$$

#dilution air/# explosive: 11.88-4.18 = 7.70

Mols Dilution Air/Mol Explosive Burned:

O_2: 7.70 (.233) (227) / 32 = 12.7
N_2: 7.70 (.767) (227) / 28 = 47.8

- Composition of Flue Gas from Burning Explosive @ 2100°F

	Mols/Mol of Explosive
CO_2	7
H_2O	2.5
N_2	69.1
O_2	12.7
	91.3

F. COMBUSTION OF PROPELLANT

Assumptions: Composition of Propellant: $C_3H_5(NO_3)_3$

Heat of Combustion of Propellant = 2920 Btu/#

- Combustion of Propellant

$$C_3H_5(NO_3)_3 \rightarrow 3CO_2 + 2\text{-}1/2H_2O \quad 1\text{-}1/2N_2 + 1/4O_2$$

mols(mol wt) 1(227) 3(44) 2-1/2(18) 1-1/2(28) 1/4(32)

- Flue Gas Generated from Burning one mol of propellant

	Mols	#
CO_2	3	132
H_2O	2.5	45
N_2	1.5	42
O_2	0.25	8
	7.25	227

#Flue Gas/#Propellant = 227/227 = 1.0

At a temperature of 2100°F and assuming a specific heat of 0.27 for the flue gas, the dilution air required is:

$$2920 = (\chi)\ (0.27)\ (2700-70)$$

$$5.32 = \quad \text{(where } \chi \text{ equals the quantity of flue gas/\# propellant)}$$

#dilution air/# propellant: 5.32-1.00 = 4.32

Mols dilution air/mol propellant burned:

O_2: 4.32 (.233) (227) / 32 = 7.1

N_2: 4.32 (.767) (227) / 28 = 26.9

- Composition of Flue Gas from Burning Propellant at 2100°F

	Mols/Mol of Propellant
CO_2	3
H_2O	2.5
N_2	28.4
O_2	7.4
	41.3

Appendix E

INCINERATION OF AGENTS

Metal Parts Furnace

Overall Assumptions:

- Agent is burned from a ton container in four hours
- Fuel Oil Burners Operate at:

	Design Firing Rate MMBtu/hr	Burner Setting %	Actual Firing Rate MMBtu/hr
Volatilization Chamber	2	50	1.0
Burnout Chamber	1.2	50	0.6
Fume Chambers	3.9	33-1/3	1.3
			2.9

A. INCINERATION OF GB

Assumption: One ton container holds 1500# of GB

Overall flue gas quantities and properties (when burning 375#/hr of GB @ 2100°F)

	Flue Gas			
	From Agent	From Fuel	Total	Mol %
CO_2	10.7	10.5	21.2	5.13
H_2O	12.1	11.3	23.4	5.67
P_2O_5	1.3		1.3	0.31
HF	2.7		2.7	0.65
N_2	175.7	138.8	314.5	76.16
O_2	29.2	20.7	49.9	12.03
	231.7	181.3	413.0	100.00

Total Heat Input		MMBtu/hr
• Fuel		2.9
• Agent	375(10,070)	3.8
		6.7

Flue Gas Rate

SCFM (1 atm & 32°F) $413.0 \times 359/60 = 2{,}470$

ACFM (1 atm & 2100°F) $2470 \left(\frac{2100+460}{32+460}\right) = 12{,}860$

Residence Time in Fume Chambers with a total volume of 600 ft^3

$$\text{Time} = \frac{600(60)}{12{,}860}$$

$$= 2.8 \text{ seconds}$$

- Air Flow Rates

		SCFM
Total Air Flow	$\frac{314.5}{60}(359)(1/.79) =$	2,380
Dilution Air	$\frac{49.9}{60}(359)(1/.21) =$	1,420
Combustion Air		960

- Maximum Agent Destruction Rate

a) If heat input limited

	MMBtu/hr
Heat Release in Primary Fume Chamber	8.3
Heat Release of Fuel	0.9
Heat Release from Agent	7.4
# Agent Burned/hour	735

b) If Residence Time Limited @ 2 seconds

Allowable Gas Flow	$\frac{600(60)}{2} =$	18,000 ACFM
Gas Volume from Fuel Burning		5,650 ACFM
Flue Gas to be Generated by Agent		12,350

Flue Gas Generated by Burning 375#/hr of GB

$$12{,}860-5{,}650 = 7{,}210 \text{ ACFM}$$

$$\therefore 375 \left(\frac{12{,}350}{7{,}210}\right) = 642\# \text{ Agent}$$

which is maximum rate agent can be burned if a two second residence time is required.

B. INCINERATION OF VX

Assumptions: One ton container holds 1600# of VX

Overall flue gas quantities and properties (when burning 400#/hr of VX @ 2100°F)

	Flue Gas			
	From Agent	From Fuel	Total	Mol %
CO_2	16.5	10.5	27.0	4.83
H_2O	19.5	11.3	30.8	5.51
SO_2	1.5		1.5	0.27
NO_2	1.5		1.5	0.27
P_2O_5	0.7		0.7	0.13
O_2	47.6	20.7	68.3	12.23
N_2	290.0	138.8	428.8	76.76
	377.3	181.3	558.6	100.00

Total Heat Input	MMBtu/hr
• Fuel	2.9
• Agent 400(15,170)	6.1
	9.0

Flue Gas Rate

SCFM (1 atm & 32°F) $558.6 \times 359/60 = 3,340$

ACFM (1 atm & 2100°F) $3340 \left(\frac{2100+460}{32+460}\right) = 17,400$

Residence Time in Fume Chamber with a total volume of 600 ft^3

$$\text{Time} = \frac{600(60)}{17,400}$$

$$= 2.1 \text{ seconds}$$

- <u>Air Flow Rates</u> SCFM

Total Air Flow	$\frac{428.8}{60}$ (359) (1/.79)	=	3,250
Dilution Air	$\frac{68.3}{60}$ (359) (1/.21)	=	1,950
Combustion Air			1,300

Maximum Agent Destruction Rate

a) If heat input limited — MMBtu/hr

Heat Release Allowed in Primary Fume Chamber	8.3
Heat Release from Fuel Burned in PFC	0.9
Maximum Heat Released by Agent	7.4
# Agent which could be burned/hr	488

b) If Residence Time Limited @ 2 seconds

Maximum Allowable Gas Flow $\frac{600(60)}{2}$ = 18,000 ACFM

Gas Volume Generated from Fuel Burning:

$$\frac{181.5}{60} \times \left(\frac{2100+460}{32+460}\right) \qquad 5{,}650 \text{ ACFM}$$

Flue Gas to be generated by Agent 12,350 ACF

- <u>Flue Gas Generated by Burning 400#/hr of VX</u>

$$17{,}400-5{,}650 = 11{,}750 \text{ ACFM}$$

$$\therefore \quad 400 \left(\frac{12{,}350}{11{,}750}\right) = 420\# \text{ Agent/hr}$$

which is the maximum rate at which agent can be burned if a two-second residence time is required.

C. INCINERATION OF H

Assumptions: One ton container holds 1700# of H

Overall flue gas quantities and properties (when burning 425#/hr of H @ 2100°F)

	Flue Gas			
	From Agent	From Fuel	Total	Mol %
CO_2	10.7	10.5	21.2	5.36
SO_2	2.7		2.7	0.68
HCl	5.3		5.3	1.34
H_2O	8.0	11.3	19.3	4.88
O_2	25.7	20.7	46.4	11.73
N_2	161.7	138.8	300.5	76.01
	214.1	181.3	395.4	100.00

Total Heat Input

	MMBtu/hr
• Fuel	2.9
• Agent 425(8010)	3.4
	6.3

Flue Gas Rate

SCFM (1 atm and 32°F) $395.6 \times 359/60 = 2{,}370$

ACFM (1 atm and 2100°F) $2370 \left(\frac{2100+460}{32+460}\right) = 12{,}320$

Residence Time in Fume Chambers with a total volume of 600 ft^3

$$\text{Time} = \frac{600(60)}{12{,}320}$$

$$= 2.9 \text{ seconds}$$

Air Flow Rates (SCFM)

		SCFM
Total Air	$\frac{300.5}{60}(359)(1/.79) =$	2280
Dilution Air	$\frac{46.4}{60}(359)(1/.21) =$	1320
Combustion Air		960

Appendix F

INCINERATION OF AGENTS

Deactivation Furnace

Overall Assumptions:

Deactivation of 20 rockets/hour

Fuel Oil Burners operat at 5.5 MMBtu/hr (46% of design)

3.2# explosive/rocket

19.3# propellant/rocket

A. INCINERATION OF GB

Assumptions: 10.7# GB/rocket

Overall Flue Gas Quantities and Properties (when burning 20 rockets/hr of GB @ 2100°F)

	Flue Gas					
	From Agent	From Propellant	From Explosive	From Fuel	Total	Mol %
CO_2	6.1	5.1	2.0	19.9	33.1	5.78
H_2O	6.9	4.3	0.7	21.4	33.3	5.82
P_2O_5	0.8	-	-	-	0.8	0.14
HF	1.5	-	-	-	1.5	0.26
N_2	100.3	48.3	19.5	263.2	431.3	75.38
O_2	16.7	12.6	3.6	39.3	72.2	12.62
	132.3	70.3	25.8	343.8	572.2	100.00

Molar Flow Rates			Mol/hr
Agent:	(20) (10.7) / 140	=	1.53
Propellant:	(20) (19.3) / 227	=	1.70
Explosive:	(20) (3.2) / 227	=	0.282
Fuel:	5.5 / 3.86	=	1.42

Total Heat Input

			MMBtu/hr
Agent:	(214)	(10,070)	2.2
Propellant:	(386)	(2,920)	1.1
Explosive:	(64)	(6,510)	0.4
Fuel:			5.5
			9.2

Flue Gas Rate

SCFM (latm & 32°F) (572.2) (359) / 60 = 3,420

ACFM (latm & 2100°F) (3420)$\left(\frac{2100+460}{32+460}\right)$ = 17,800

Residence Time in Fume Chambers with a total volume of 200 ft^3

$$\frac{(200)(60)}{17,800} = 0.7 \text{ seconds}$$

Air Flow Rates

		SCFM
Total Air Flow	$\frac{4313}{60}$ (359) (1/.79) =	3,270
Dilution Air	$\frac{72.2}{60}$ (359) (1/.21) =	2,060
Combustion Air		1,210

B. INCINERATION OF VX

Assumptions: 10.2# VX/rocket

Overall Flue Gas Quantities and Properties (when burning 20 rockets/hr of VX @ 2100°F)

	Flue Gas					
	From Agent	From Propellant	From Explosive	From Fuel	Total	Mol %
CO_2	8.4	5.1	2.0	19.9	35.4	5.61
H_2O	9.9	4.3	0.7	21.4	36.3	5.75
SO_2	0.8	-	-	-	0.8	0.13
NO_2	0.8	-	-	-	0.8	0.13
P_2O_5	0.4	-	-	-	0.4	0.06
O_2	24.1	12.6	3.6	39.3	79.6	12.60
N_2	147.1	48.3	19.5	263.2	478.1	75.72
	191.5	70.3	25.8	343.8	631.4	100.00

Molar Flow Rates		Mol/hr
Agent:	(20) (10.2) / 267 =	0.76
Propellant:	(20) (19.3) / 227 =	1.70
Explosive:	(20) (3.2) / 227 =	0.282
Fuel:	5.5 / 3.86 =	1.42

Total Heat Input		MMBtu/hr
Agent:	(204) (15,710)	3.2
Propellant:	(386) (2,920)	1.1
Explosive:	(64) (6,510)	0.4
Fuel:		5.5
		10.2

Flue Gas Rate

SCFM (latm & 32°F) (631.4) (359) / 60 = 3,780

ACFM (latm & 2100°F) 3,780 $\left(\frac{2100+460}{32+460}\right)$ = 19,700

Residence Time in Fume Chambers with a total volume of 200 ft^3

$\frac{(200)(60)}{19,700}$ = 0.6 seconds

Air Flow Rates		SCFM
Total Air Flow $\frac{478.1}{60}$ (359) (1/.79)	=	3,620
Dilution Air Flow $\frac{79.6}{60}$ (359) (1/.21)	=	2,270
Combustion Air		1,350

Appendix G

PHYSICAL & CHEMICAL PROPERTIES OF AGENTS

	GB	VX	H
Chemical Formula	$C_4H_{10}FO_2P$	$C_{11}H_{26}NO_2PS$	$C_4H_8Cl_2S$
Molecular Weight	140.1	267.4	159.1
Density (liquid @ 25°C)	1.09	1.008	1.27 @ 20°C
Boiling Point (°C)	158	298	228
Viscosity (Centistokes @ 25°C)	1.28	9.96	3.6 @ 20°C
Heat of Vaporization (cal/g)	80	78.2	94.3
Heat of Combustion (cal/g)	5596	8430	4450
Heat of Formation (K cal/mol)			32
Specific Heat			0.330

Appendix H

AIR POLLUTION CONTROL FOR INCINERATION OF GB AND VX

The major air pollution control problem associated with incineration of GB and VX is the formation of P_2O_5 and/or phosphoric acid particulate of 0.4 to 2.6 micron (median of 1.6 micron) diameter. Control of these particulate emissions requires the use of such methods as electrostatic precipitation, high efficiency diffusion filtration, or high pressure drop venturi scrubbing.

Other air pollutants generated by the incineration of nerve agents include HF from GB and SO_x and NO_x from VX. The packed bed scrubbing tower in the present system is designed to remove 90-95% of the SO_2 in the flue gas from HD or VX incineration, and therefore should remove greater than 99% of the HF from GB incineration (or 99% of the HCl from HD incineration). High concentrations of NO_x in the flue gas would normally also pose a potential emission control problem since only about 20% of the NO_x is removed from flue gas by caustic or aqueous scrubbing in the absence of SO_2. In the presence of SO_2 as formed in VX incineration, however, NO_x removal efficiency might be increased to as much as 60-70% depending on flue gas oxygen concentration. Fortunately, the presence of nitrogen in the VX molecule does not necessarily result in high levels of NO_x in the flue gas. The concentration of NO_x in the flue gas is a function of excess air and combustion temperature rather than nitrogen content of the fuel.[1] Indeed, in pilot scale combustion tests of VX in December 1972[2], NO_x concentration leaving the scrubber was measured at less than 1 ppm, indicating very low levels of NO_x formation during VX incineration.

The P_2O_5 or (organic) phosphoric acid mist remains as the primary obstacle to meeting air pollution control requirements for JACADS with the present scrubbing system design.

---

[1] EATR4586 "Incineration of VX and Containment of Gaseous Products," March 1972, Appendix B, p.30.

[2] EATR4734 "Pilot-Scale Incineration of GB and VX and the Containment of Gaseous Products," May 1973, p.3.

Two particulate control methods that might be applied at JACADS for P_2O_5 and/or organic phosphoric acid mist are (1) additional high efficiency (HE) Brinks diffusion filter capacity or (2) doubling the present 20 in. WC venturi Δp to 40 in. WC.

Brinks HE Diffusion Filter P_2O_5 Control

According to the manufacturer of the Brinks HE diffusion filter units (Monsanto), the design range for the size HE filter units used at CAMDS (1.5 ft ID, 2.0 ft OD x 8 ft height) is 300-1800 acfm per filter. For most efficient small particulate collection, the filters should be operated at the lower end of this range. These design rates of 300-1800 acfm are equivalent to linear gas velocities of 8-48 fpm at the inside face of the filter. The present CAMDS system with 4 filter units per scrubber is operating with gas flow rates of 2000 acfm per filter ($\sim$50 fpm face velocity) at scrubber gas flow rates of about 8000 acfm. To lower the gas flow rate per filter and reduce the linear gas flow rate through the HE filter units, additional filter units would be required.

More space would be required than would be available in a packed bed scrubber of the proper design for JACADS to contain these extra Brinks filter units. In addition, location of the filter units within the scrubber would add to the problems of water balance, filter washwater flow rate and pH control and alkaline scrubber liquor carryover to the filters.

For all these reasons it would be advantageous to locate the filter units in a separate vessel from the packed bed scrubber. This vessel could also be isolated from the rest of the scrubbing system on either the deactivation or metal parts furnace by using by-pass dampers whenever VX or GB were not being incinerated.

The estimated cost for such an HE filter system for processing flue gas from two deactivation furnaces or two metal parts furnaces the size of CAMDS, is summarized in Table H-1.

The primary material of construction for this Brinks filter particulate control system was assumed to be 316SS. This stainless steel would be compatible with the use of caustic water wash of the filter units or

TABLE E-1

ESTIMATED CAPITAL COST FOR P_2O_5 MIST CONTROL SYSTEM

(For a single scrubber handling flue gas from two MPFs or DFSs of CAMDS Size)

	Equipment Feb. 1982 $	Installed Cost Mid. US Feb. 1982 $
Filter Holding Vessel 316SS (-50 in W.C. rating)		
19 ft diam x 25 ft high x 3/8 wall thickness		
including filter holding plate & hardware	139,130	347,800
30 Brinks HE Filters		
2 ft OD x 8 ft long (316SS)	83,700	83,700
150 ft Additional Ductwork		
2 ft diam x 3/16 in thick (304SS)	--	56,450
3 Stainless Steel Dampers 2 ft (Allow)		21,000
30 gpm Circulation (Filter Wash) Pump (316SS)	2,000	6,000
Subtotal		$512,950
Increased Fan Cost for Additional -10 in. WC		
Pressure Drop (Fan 316SS wheel, rubber lined		
20,000 acfm at -50 in. WC)		28,100
Total Brinks Filter Particulate Control System		$543,050

Say $545,000 Mid Continent U.S.
or $1,090,000 for JACADS

acidic operation with plain water wash of the filters. In both cases, we have assumed that the primary pollutant removed in this system will be the phosphoric acid particulate and there would be negligible residual HF in the gas stream following the packed bed scrubber. If, however, there were significant carryover of HF to the Brinks filter vessel, the 316SS might not be a suitable material of construction.

The 316SS Brinks filter elements could be used in either a basic or acidic filter wash mode with the recirculating pump filter irrigation system. However, if it were possible to operate in an acidic mode without corrosion of the 316SS, the more efficient fiberglass HE Brinks filters could be used. Polypropylene filter units could also be used under either basic or acidic conditions (with external cooling of the recirculating filter wash liquor in order to stay below their 150°F operating temperature limit).

The increased annual operating cost for electric power for the Brinks filter unit system would be:

$$(240-200)\ \frac{\text{HP hr}}{\text{hr}} \times \frac{1}{0.8\ \text{Eff.}} \times \frac{0.746\ \text{kwh}}{\text{HP hr}} \times \frac{80\ \text{hr}}{\text{wk}} \times \frac{50\ \text{wks}}{\text{yr}} \times \frac{\$0.15}{\text{kwh}} = \$22{,}380/\text{yr}$$

The power requirement for the recirculating filter wash pump would be negligible at 1-2 HP. The cost of maintenance for this unit cannot be accurately predicted at this time, but at 5% of capital investment might be in the order of $25-50,000 per year.

Increased Venturi Pressuure Drop for P_2O_5 Control

As an alternative to installation of a Brinks HE filter unit system, P_2O_5 particulate might also be controlled by using a higher pressure drop across the venturi. Data published by TVA indicate that increasing the venturi pressure drop from the present 20 in. WC pressure drop to about 40 in. WC would increase P_2O_5 removal efficiency from the present 40-60%[3] to over 99%[4]. The increased pressure drop across the venturi would be

[3] Phosphoric Determinations, STW Testing Inc. (12/74).

[4] Nonhebel, G., "Processes for Air Pollution Control, 2nd edit., CRC Press (1972), p.554.

accomplished by simply reducing the throat opening of the venturi since the liquor rate is already quite high and would not need to be increased further. Although increasing pressure drop across the venturi generally results in increased removal efficiency of fine particulate, care must be taken in the design of the separator (such as location of gas inlet and turning vanes, if required) to prevent reentrainment of scrubbing solution.

The capital cost increase for the higher venturi pressure drop is directly related to fan and fan drive costs, and operating cost is increased by the additional fan power requirement. For the decrease in operating pressure for the total scrubbing system (-40 in. WC to -60 in. WC design pressure), no increase in scrubber diameter or venturi or scrubber wall thickness would be required.

The increased capital investment for the higher venturi pressure drop would be:

	At -40 in. WC ($ Feb. 1982)	At -60 in. WC ($ Feb. 1982)
20,000 acfm Fan		
316SS Wheel, Rubber Lined Housing	25,000	30,000
Motor	3,000	5,000
Starter	2,000	3,000
Coupling	300	400
Total Equipment	30,300[5]	38,400
Total Installed Mid U.S.	90,900	115,200
Total Installed JACADS	181,800	230,400

Differential Capital Cost - $48,600

The additional operating (power) cost would be:

$$(290-240)\ \frac{\text{HP hr}}{\text{hr}} \times \frac{1}{0.8\ \text{Eff.}} \times \frac{0.746\ \text{kwh}}{\text{HP hr}} \times \frac{80\ \text{hr}}{\text{wk}} \times \frac{50\ \text{wks}}{\text{yr}} \times \frac{\$0.15}{\text{kwh}} = \$50{,}360/\text{yr.}$$

---

[5] Cheremisinoff, P. and R. Young, "Pollution Engineering Practice Handbook," Ann Arbor Science Publishers (1976), pp 155-157.

Appendix I

COST ESTIMATION FOR CHLORINE AND CAUSTIC DELIVERED TO JOHNSTON ISLAND

Several telephone contacts were made to determine the costs for chlorine and caustic delivered to Johnston Island. These contacts and the methods by which costs were calculated are described in this Appendix. The actual cost figures are given in Appendix A.

Preliminary estimates were obtained for the costs of purchasing chlorine and caustic and transporting these chemicals to Johnston Island. The bases for these estimates are the following:

- approximately 5-10 thousand tons of chlorine will be required over a 2-3 year period;
- approximately 5-10 thousand tons of dry caustic will be required;
- the caustic should be provided as a 50 percent aqueous solution; and
- the chemicals will be transported from a western U.S. port to Johnston Island as containerized freight.

The cost of the chemicals employed in this application will exceed their bulk price per electroequivalent chemical unit (ecu) FOB Gulf Coast. (One ecu corresponds to 1.1 tons of caustic and 1.0 ton of chlorine.) The reasons for this are summarized below:

- Chlorine cannot be shipped to this destination in bulk form; it must be repackaged in one ton cylinders. This contributes significantly to the cost of the chemical. (Alternative shipping arrangements are under investigation; information on this subject will be forwarded as it becomes available.)
- It may not be possible to provide storage at Johnston Island for the large quantity of caustic solution which would be transported in container lots. It may, then, be necessary to package the solution in some type of "throw away" container or use caustic in an anhydrous form. Both alternatives are more costly than bulk, 50 percent caustic solution. Only the latter alternative was examined.
- The use of dry caustic could be economically justified if freight costs were so high that the cost of transporting the excess volume of the water in the caustic solution exceeded the cost difference between the anhydrous caustic and the solution (for equivalent quantities of NaOH). However, the data gathered to date indicates that such is not true in this particular case.

These chemicals will be purchased at a port location and transported by ship to Johnston Island. Both west coast and gulf coast points of origin were considered. However, it appears that a single shipping line, Matson Navigation Company, provides service to Johnston Island. This line transports cargo between Johnston Island and the west coast ports of Seattle, Washington; Portland, Oregon, Oakland and Los Angeles, California. This shipping line does not provide service between any gulf coast ports and Johnston Island.

Cost Estimates

A number of issues were raised in the course of obtaining price quotations; these issues will be addressed in this section.

The costs quoted were for chlorine packaged in one ton cylinders. It should be noted that it may be difficult to obtain the large number of cylinders required, since most vendors perceive that a shortage of such cylinders exists. One vendor indicated that the government owns large numbers of these cylinders which might be used for this application. A second vendor indicated that it would be necessary for the Army to provide its own cylinders. These cylinders would cost $1,500 each in the case that the Army was required to purchase them. If the vendor supplies cylinders, a deposit (approximately $1,200-$1,500 for each cylinder) may be required.

It should also be noted that empty cylinders must be returned to the vendor to be refilled; the freight costs associated with this must also be considere

Pertaining to caustic, it was noted previously that certain issues, (i.e., liquid storage availability, freight costs, and safety factors), dictate whether the bulk caustic solution or anhydrous sodium hydroxide should be employed.

Freight rates for containerized shipping were obtained. It was assumed that liquids would be transported in bulk form in a tank provided by the shipping lines. The freight rate which applies is based on the volume of liquid shipped. Prepackaged chemicals would be placed in ordinary shipping containers. One container is capable of holding 1,415 cubic feet of cargo, although there is a maximum weight limitation of 45,000 pounds.

Using a density of 96.14 lb/ft^3 for a 50 percent caustic solution, the freight rate for this material was calculated. For comparison, the cost of transporting dry sodium hydroxide was calculated. This material is packaged in 500 lb drums; one shipping container reportedly holds 80 drums (20 tons of sodium hydroxide).

Freight costs for chlorine consist of costs associated with transporting the chlorine itself as well as those incurred in returning empty chlorine cylinders to the repackager. Since full chlorine cylinders each weigh 3500 pounds, only 12 full cylinders may be transported per container because of the maximum weight stipulation. However, a container can accommodate more empty cylinders; in this case volume constraints rather than weight constrainsts must be considered.

The data reported herein was obtained as a result of telephone contacts with chemical producers, chemical sales organizations and shipping firms. A summary of telephone contacts is attached.

Kaiser Chemical Company

- Location: Oakland, California
- Telephone Numbers: (415) 271-3204
  (415) 271-3014
- Contacts: Mr. Mike Stone
  Mr. Bob Hopper

Bulk caustic and chlorine costs were obtained from Kaiser per ecu (electro-equivalent chemical unit) FOB Gulf Coast. One ecu corresponds to 1.1 tons of caustic and 1.0 tons of chlorine. However, chlorine cannot be shipped to Johnston Island in bulk form. It will require repackaging in one ton cylinders. Additionally, it may be advantageous to consider purchasing anhydrous caustic for the following reasons:

- Although anhydrous caustic is more expensive than a 50% caustic solution (dry NaOH basis), the cost of transporting the dry material may be significantly less than that of shipping a solution (i.e., the volume of the dry material is much smaller than that of the solution).
- It will be necessary to maintain large inventories of the solution at Johnston Island since enough storage must be provided to contain a quantity in excess of one shipload. If such storage can not be provided, for economic or space availability reasons, it will be necessary to use dry caustic and mix the solution at Johnston Island.

Since Kaiser does not market caustic and chlorine in the form required, we were referred to the following repackager:

Thompson, Hayward Company
New Orleans, Louisiana
(504) 866-3601

Thompson, Hayward Company

- Location: Kansas City, Kansas
- Telephone Number: (913) 321-3131
- Contact: Kenneth Berdsley

This company distributes caustic and chlorine from Gulf Coast ports. Prices (FOB New Orleans, Louisiana) were quoted for the following:

- The price of chlorine packaged in one ton cylinders assumes the customer provides cylinders. Thompson, Hayward will pick up the cylinders at the dock, transport them to the plant, fill and return them to the dock for shipping. This process requires 4-6 days, in which time one container lot (12 cylinders) can be processed.

- The price of caustic solution was given per dry ton of NaOH. A minimum of 3,600 gallons must be purchased at a time.

- The price of container lots (40,000 pounds) of solid sodium hydroxide beads packaged in 500 pound drums were given per pound NaOH.

Mr. Berdsley reported that for safety and economic reasons, caustic is generally transported in solid form.

Dow Chemical Company

- Location: Walnut Creek, California

- Telephone Number: (415) 944-2000

- Contact: Mr. John Owens

Mr. Owens indicated that caustic can be shipped to Johnston Island in either of two forms:

- as dry pellets in 50 lb drums; or

- as a 50% aqueous solution.

While the unit cost (dry basis) of the pellets is greater than that of the solution, the unit freight costs for the dry material would be expected to be lower than those for the solution (i.e., a larger volume of solution must be shipped in order to provide an equivalent amount of NaOH). Because shipping costs will be high, it may be advantageous from a cost standpoint to consider shipping dry caustic.

The cost of dry caustic was given per pound NaOH, FOB Oakland. This chemical is manufactured in Pittsburgh, Pennsylvania; the cost quoted includes delivery to Oakland, California.

The cost of caustic was given per dry ton of NaOH in solution, FOB Pittsburgh, Pennsylvania, as well as the cost of transporting this material from Pittsburgh to the West Coast (i.e., Oakland, California).

Dow Chemical Company does not sell chlorine in one ton cylinders. We were referred to the following repackagers:

- McKesson Chemical Company
  Union City, California
  (415) 489-1400

- Jones Chemical Company
  Milpitas, California
  (408) 262-8300

- All Pure, Inc.
  Tracy, California
  (209) 835-5423

Mr. Owens additionally stated that he is aware of only one means of transporting freight to Johnston Atoll, by Navy Ship.

All Pure, Inc.

- Location: Tracy, California

- Telephone Number: (209) 835-5423

- Contact: Mr. Bill Sossamon

All Pure markets caustic and chlorine. The prices for these chemicals, FOB Oakland or San Francisco, California, were quoted for:

- Chlorine packaged in one ton cylinders (a $1200 deposit is required for each cylinder); and

- Caustic, per dry ton of bulk, 50% solution.

Hooker Chemical Company

- Location: Tacoma, Washington

- Telephone Number: (206) 593-1305

- Contact: Mr. Bob McDonald

The cost of bulk 50% caustic solution was quoted per dry ton of caustic in solution, FOB Tacoma, Washington.

Mr. McDonald indicated that it was unlikely that bulk chlorine could be shipped to Johnston Island while contained in rail tankers; it would be necessary to repackage the chemical in one ton cylinders. However, Hooker does not market chlorine packaged in cylinders, and it will be necessary to look to a repackager for costs. One such company,

Jones Chemical Company repackages (i.e., in one ton cylinders) significant amounts of chlorine produced by Hooker. We were referred to this vendor for further information on this chemical.

There also might exist a problem in obtaining the large number of one ton containers which would be required to ship 5,000-10,000 tons, of chlorine over a 2-3 year period. One proposed alternative may be to use cylinders which are currently owned by the government, if such could be made available.

Jones Chemical Company

- Location: Tacoma, Washington
- Telephone Number: (206) 572-9030
- Contact: Mr. Jim Zimmerman, Manager

Chlorine packaged in one ton cylinders is currently sold by Jones Chemical Company. However, considering the large quantity which would be purchased (5,000-10,000 tons over a 2 to 3 year period), Mr. Zimmerman is certain that a price reduction for such a large volume sale would be in order. However, he could not define the magnitude of this price reduction.

Mr. Zimmerman does not know the cost of shipping chlorine to Johnston Atoll; however, he did indicate that the cost of barge transport of chlorine to Hawaii is $30 to $35 per ton. He also indicated that freight costs will probably exceed the cost of the chlorine itself.

U.S. Army Corps of Engineers

- Location: Statistics Center
  New Orleans, Louisiana
- Telephone Number: (504) 885-6807
- Contact: Mr. Dave Penick

The U.S. Army Corps of Engineers keeps detailed statistics regarding commercial shipping. Their records indicate that Matson Navigation Company (100 Mission Street, San Francisco, California) is the only shipping lines which has serviced Johnston Island. The only other company which apparently operates in that area is U.S. Lines, Inc. (27 Commerce Drive, Cranford, New Jersey).

Matson Navigation Company

- Location: 100 Mission Street
  San Francisco, California

- Telephone Number: (415) 957-4811

- Contact: Mr. Rick Jalbuena

Mr. Jalbuena provided the freight rates which apply to shipping containerized cargo from Western United States ports (including Los Angeles, California; Oakland, California; Portland, Oregon; and Seattle, Washington) to Johnston Island.

These rates pertain to shipping bulk liquids, such as caustic, in tanks provided by the shipping lines as well as prepackaged chemicals (i.e., sodium hydroxide pellets packaged in drums or chlorine contained in cylinders.

Matson Navigation Company does not transport cargo between the Gulf Coast and Johnston Island.

U.S. Lines, Inc.

- Location: 27 Commerce Drive
  Cranford, New Jersey

- Telephone Number: (201) 272-9600

- Contact: Mr. Bruce Conner

This company does not service Johnston Island. I was referred to Matson Navigation Company, which is believed to be the only company which could be identified that operates in that area.

Appendix J

REFERENCES

1. Chemical System Laboratory Special Publication ARCSL-SP-80032, "Decontamination Methods for HD, GB, and VX - A Literature Survey."

2. DFS Agent GB Challenge Test (Test Report No. 04-25 dated 6/3/81)
   MPF Agent GB Challenge Test (Test Report No. 05-08C dated 12/9/81)
   MPF Agent GB Challenge Test (Test Report No. 05-15 dated 1/7/82)

3. Final Demilitarization Plan dated 9/78 (page 197).

4. Final Concept Design Report TR05-09 dated 7/4/74 by Surface Combustion Division, Midland-Ross Corporation.

5. Technical Report on Pollution Control Systems Utilization, Contract DACA 87-81-C-0122, Deliverable 3C, 4505-TR-03C.

6. JACADS Pollution Control Systems Utilization, 4505.10-TR-3C, March 1982.

7. Cost of a 2,2,2,2, ADS for JACADS, Report, "Demilitarization Master Plan for Johnston Atoll Chemical Agent Disposal System (JACADS)," DACA 87-81-C-0122, 4505-TR-02, March 1982.

Data and Document Control Center
B053

Disposal of Chemical Munitions and Agents

NAS
NAE
IOM

Disposal of Chemical Munitions and Agents

Disposal of Chemical Munitions and Agents

A Report Prepared by the
Committee on Demilitarizing Chemical Munitions and Agents
Board on Army Science and Technology
Commission on Engineering and Technical Systems
National Research Council

NATIONAL ACADEMY PRESS
Washington, D.C. 1984

NATIONAL ACADEMY PRESS 2101 CONSTITUTION AVE., NW WASHINGTON, DC 24018

NOTICE: The project that is the subject of this report was approved by the Governing Board of the National Research Council, whose members are drawn from the councils of the National Academy of Sciences, the National Academy of Engineering, and the Institute of Medicine. The members of the committee responsible for the report were chosen for their special competences and with regard for appropriate balance.

This report has been reviewed by a group other than the authors according to the procedures approved by a Report Review Committee consisting of members of the National Academy of Sciences, the National Academy of Engineering, and the Institute of Medicine.

The National Research Council was established by the National Academy of Sciences in 1916 to associate the broad community of science and technology with the Academy's purposes of furthering knowledge and of advising the federal government. The Council operates in accordance with general policies determined by the Academy under the authority of its congressional charter of 1863, which establishes the Academy as a private, nonprofit, self-governing membership corporation. The Council has become the principal operating agency of both the National Academy of Sciences and the National Academy of Engineering in the conduct of their services to the government, the public, and the scientific and engineering communities. It is administered jointly by both Academies and the Institute of Medicine. The National Academy of Engineering and the Institute of Medicine were established in 1964 and 1970, respectively, under the charter of the National Academy of Sciences.

This study was supported by contract DAAG 29-82-C-0012 between the National Academy of Sciences and the Department of the Army.

LIBRARY OF CONGRESS CATALOG CARD NUMBER 84-62500
INTERNATIONAL STANDARD BOOK NUMBER 0-309-03527-9

Printed in the United States of America

Committee on Demilitarizing Chemical Munitions and Agents

NORTON D. ZINDER *(Chairman)*, Professor of Genetics, Rockefeller University, New York, New York

ROBERT W. BUCHHEIM *(Technology Assessment Panel Chairman)*, formerly Deputy Assistant Director, U.S. Arms Control and Disarmament Agency, Phoenix, Arizona

HARRISON SHULL *(Stockpile Assessment Panel Chairman)*, Chancellor, University of Colorado, Boulder, Colorado

D. WARNER NORTH *(Stockpile Assessment Panel Assistant Chairman)*, President, Decision Focus, Inc., Los Altos, California

LEO G. ABOOD, Professor, University of Rochester Medical Center, Rochester, New York

CHARLES H. BEDINGFIELD, Principal Consultant, E. I. duPont de Nemours & Company (Retired), Newark, Delaware

AUSTIN W. BETTS, Consultant to the President, Southwest Research Institute, San Antonio, Texas

ALAN R. DAHL, Senior Inhalation Toxicologist, Lovelace Inhalation Toxicology Research Institute, Albuquerque, New Mexico

WILLIAM EICHER, Major General, U.S. Army (Retired), Laurel, Maryland

CHESTER GRELECKI, President and Chief Scientist, Hazards Research Corporation, Rockaway, New Jersey

ERSKINE E. HARTON, JR., Consultant, Falls Church, Virginia

PHILIP E. HICKS, President, Hicks and Associates, Orlando, Florida

WALTER B. LABERGE, Vice President, Planning and Technology, Lockheed Missiles and Space, Sunnyvale, California

RONALD M. LATANISION, Shell Distinguished Professor of Materials Science, Massachusetts Institute of Technology, Cambridge, Massachusetts

RICHARD A. MATULA, Dean, College of Engineering, Louisiana State University, Baton Rouge, Louisiana

WILLIAM G. MCMILLAN, McMillan Science Associates, Los Angeles, California

AARON NOVICK, Professor, Institute of Molecular Biology, University of Oregon, Eugene, Oregon

CARL R. PETERSON, Associate Professor, Department of Mechanical Engineering, Massachusetts Institute of Technology, Cambridge, Massachusetts

DENNIS L. PRICE, Professor, Department of Industrial Engineering and Operations Research, Virginia Polytechnic Institute, Blacksburg, Virginia

HAROLD E. PRICE, Vice President, Essex Corporation, Alexandria, Virginia

ARNOLD W. REITZE, JR., Professor of Law, National Law Center, The George Washington University, Washington, D.C.
CEDOMIR M. SLIEPCEVICH, Department of Chemical Engineering, Flame Dynamics Laboratory, University of Oklahoma, Norman, Oklahoma
ROBERT C. SPEAR, Professor of Environmental Health Sciences, School of Public Health, University of California, Berkeley, California
TELFORD WORK, Professor of Infectious Diseases, School of Public Health, University of California, Los Angeles, California
ZIVIA S. WURTELE, R&D Associates, Marina del Rey, California

Staff

DENNIS F. MILLER, *Study Director*
HOWARD E. CLARK, *Staff Officer, Technology Assessment Panel*
MICHAEL GAFFEN, *Staff Officer, Stockpile Assessment Panel*
HELEN D. JOHNSON, *Administrative Associate*
LEE CARLSON, *Administrative Secretary*
DONNA BROACH, *Administrative Secretary*
JUNE RICHARDSON, *Administrative Secretary*

Stockpile Assessment Panel

HARRISON SHULL *(Chairman)*, Chancellor, University of Colorado, Boulder, Colorado
LEO G. ABOOD, Professor, University of Rochester Medical Center, Rochester, New York
ALAN R. DAHL, Senior Inhalation Toxicologist, Lovelace Inhalation Toxicology Research Institute, Albuquerque, New Mexico
WILLIAM EICHER, Major General, U.S. Army (Retired), Laurel, Maryland
RONALD M. LATANISION, Shell Distinguished Professor of Materials Science, Massachusetts Institute of Technology, Cambridge, Massachusetts
D. WARNER NORTH, President, Decision Focus, Inc., Los Altos, California
AARON NOVICK, Professor, Institute of Molecular Biology, University of Oregon, Eugene, Oregon
ARNOLD W. REITZE, JR., Professor of Law, National Law Center, The George Washington University, Washington, D.C.
CEDOMIR M. SLIEPCEVICH, Department of Chemical Engineering, Flame Dynamics Laboratory, University of Oklahoma, Norman, Oklahoma
ROBERT C. SPEAR, Professor of Environmental Health Sciences, School of Public Health, University of California, Berkeley, California
TELFORD WORK, Professor of Infectious Diseases, School of Public Health, University of California, Los Angeles, California

Staff

MICHAEL GAFFEN, *Staff Officer*
DONNA BROACH, *Administrative Secretary*

Technology Assessment Panel

ROBERT W. BUCHHEIM *(Chairman)*, formerly Deputy Assistant Director, U.S. Arms Control and Disarmament Agency, Phoenix, Arizona

CHARLES H. BEDINGFIELD, Principal Consultant, E. I. duPont de Nemours & Company (Retired), Newark, Delaware

AUSTIN W. BETTS, Consultant to the President, Southwest Research Institute, San Antonio, Texas

CHESTER GRELECKI, President and Chief Scientist, Hazards Research Corporation, Rockaway, New Jersey

ERSKINE E. HARTON, JR., Consultant, Falls Church, Virginia

PHILIP E. HICKS, President, Hicks and Associates, Orlando, Florida

RICHARD A. MATULA, Dean, College of Engineering, Louisiana State University, Baton Rouge, Louisiana

CARL R. PETERSON, Associate Professor, Department of Mechanical Engineering, Massachusetts Institute of Technology, Cambridge, Massachusetts

DENNIS L. PRICE, Professor, Department of Industrial Engineering and Operations Research, Virginia Polytechnic Institute, Blacksburg, Virginia

HAROLD E. PRICE, Vice President, Essex Corporation, Alexandria, Virginia

Staff

HOWARD E. CLARK, *Staff Officer*

JUNE RICHARDSON, *Administrative Secretary*

Board on Army Science and Technology

MARTIN GOLAND *(Chairman)*, President, Southwest Research Institute, San Antonio, Texas
ARDEN L. BEMENT, JR., Vice President, TRW, Incorporated, Cleveland, Ohio
STUART K. CARD, Member, Research Staff, Xerox Palo Alto Research Center, Palo Alto, California
LEONARD W. CRONKHITE, JR., President, Medical College of Wisconsin, Milwaukee, Wisconsin
ALFRED GESSOW, Professor and Chairman, Department of Aerospace Engineering, University of Maryland, College Park, Maryland
JERRIER A. HADDAD, Consultant, Briarcliff Manor, New York
WALTER B. LABERGE, Vice President, Planning and Technology, Lockheed Missiles and Space, Sunnyvale, California
CHARLES H. MCKINLEY, Vice President, Vought Corporation, Dallas, Texas
WILLIAM G. MCMILLAN, McMillan Science Associates, Los Angeles, California
GORDAN H. MILLAR, Vice President, Deere and Company, Moline, Illinois
LUDWIG REBENFELD, President, Textiles Research Institute, Princeton, New Jersey
ZIVIA S. WURTELE, R&D Associates, Marina del Rey, California
NORTON D. ZINDER, Professor of Genetics, Rockefeller University, New York, New York

Staff

DENNIS F. MILLER, *Executive Director*
HELEN D. JOHNSON, *Administrative Associate*

Preface

This report responds to a request from the Department of the Army to the National Research Council (NRC) for a study to recommend the most effective, economical, and safest means for disposing of the Army's aging and obsolete stockpile of chemical agents and munitions.

In a November 3, 1982, letter to Martin Goland, chairman of the NRC's Board on Army Science and Technology, James R. Ambrose, Undersecretary of the Army, stated: "The United States faces a formidable problem in disposing of its current obsolete chemical munitions and agent stockpile. About 90 percent of the inventory of chemical agent and nearly as much of the munitions inventory has little or no military value and will require disposal regardless of future decisions regarding the binary weapons program. The cost of disposal will be significant. Estimates range as high as $4 billion. R&D efforts are underway to seek less expensive ways of safe disposal. In the meantime, the current stockpile — some in a state of physical deterioration — must be kept safe and secure."

In response to the Army's request, the NRC's Commission on Engineering and Technical Systems established a Committee on Demilitarizing Chemical Munitions and Agents under the Board on Army Science and Technology in August 1983.

The committee, the first nongovernment group to study the whole range of U.S. chemical weapons since a previous National Academy of Sciences report issued in 1969, consisted of 25 members. In addition to members with expertise in such scientific and technological areas as chemistry, environmental sciences, toxicology, and industrial, mechanical, chemical, and human factors engineering, members were also selected who had knowledge of law, public health, systems safety, industrial safety, and the storage and handling of explosives.

Before proceeding with its task, the committee found that information was needed on the current stockpile. Its status would largely determine what technology would be recommended for disposal of chemical agents and munitions. Because of the one-time nature of disposal, once a technology is put in place, it would be very costly to modify or replace it.

If the chemical weapons were found to be deteriorating rapidly, then current technology would, of necessity, be recommended. However, if the stockpile were

found to be relatively stable, then the current technology, which dates to the 1960s, could be replaced by safer technologies, which will become available later in the 1980s or the 1990s.

Thus, the Army specifically asked the committee to:

- Evaluate the stockpile's current status for each type of chemical munition and for each location.
- Assess the potential for and possible consequences to public health of an accident or incident involving the release of chemical agents into the atmosphere in terms of high, medium, and low probability.
- Determine the urgency of disposing of each type of chemical agent and munition.
- Assess the Army's current and planned disposal programs and the technology now available for carrying them out.
- Suggest alternative technologies or new approaches that should be considered prior to any decision on how to dispose of the U.S. stockpile of chemical agents and munitions.

To conduct its study, the committee created two panels out of its membership. The first addressed the issue of the current stockpile of chemical munitions and its safety. The Stockpile Assessment Panel sent questionnaires to and visited all eight sites in the continental United States where the Army stores chemical munitions. The panel also heard Army briefings at each site on the status of stored chemical agents and their potential hazard should any be accidentally released, and it heard from private industry representatives.

The full committee met on October 18-19, 1983, at Aberdeen, Maryland; on December 6-7, 1983, in Salt Lake City, Utah; and again on April 4-6, 1984, in Washington, D.C. Members of the Stockpile Assessment Panel visited the Lexington-Blue Grass depot on November 29, and the Newport, Indiana, depot on November 30, 1983. The entire committee met and visited the Tooele, Utah, depot on December 7-8, 1983. Additional site visits by panel members were made to Umatilla, Oregon, on January 11-12; Anniston, Alabama, on January 24; Pine Bluff, Arkansas, on January 25; and Aberdeen, Maryland, on March 8, 1984. The full panel met and visited the Pueblo, Colorado, depot on February 15-16, 1984.

The second panel—the Technology Assessment Panel—reviewed the technologies now available for disposing of chemical weapons and assessed alternative technologies and new approaches that might be used in the future. This panel also reviewed current and planned Army disposal programs. It, too, received briefings from Army and private industry experts in addition to its visits to three of the Army storage facilities. The panel met in San Diego, California, on January 10-12, 1984, and in Washington, D.C., on February 8-9 and on February 29-March 2, 1984.

The Technology Assessment Panel developed a file of resource documents with the assistance of the Army and various other contributors. This file contains about 150 documents covering a great variety of subjects and technical data on topics such as chemical munitions, transporting hazardous materials, processes for destroying

chemical weapons, system safety, human factors, and legislation and regulations relative to chemical weapons. In addition, the general literature within the disciplines of panel members was consulted. Such sources are referenced throughout this document.

In the original design of this study, a third panel of experts was to consider issues raised by the potential need to transport chemical munitions from one depot to another. Such movement might be necessary for storage, safety, or disposal reasons. Unfortunately, because of the lack of Army funds and for other reasons, the third panel could not be established.

Instead, both the stockpile and technology panels addressed aspects of the transportation problem. But both lacked sufficient expertise and information to analyze in detail the safety, costs, legality, and politics of transporting chemical munitions.

The committee and its two panels recommend that the Army initiate a technical study of transporting chemical munitions. Such a study should in no way interfere with current or planned programs to dispose of chemical weapons. Without such a study, however, the efforts of this committee will be incomplete.

There were several issues that the committee did not address. For one, the committee did not study the question of U.S. chemical weapons stored in other countries. The committee considered neither the likelihood of chemical weapons being used in wartime nor international negotiations that might lead to a treaty for their disposal. Also, the committee did not deal with the binary munitions issue. These issues were outside the committee's charge.

On the other hand, in case international negotiations lead to a treaty for the disposal of chemical weapons, the committee did consider the need to verify that chemical agents and munitions are in fact disposed of.

The committee's report is divided into four parts. The first represents the joint report of the committee's two panels. It includes the executive summary and the introduction. The second and third parts consist of the reports of the stockpile and technology assessment panels, respectively. The fourth part contains the appendices and includes a glossary of acronyms and terms.

This report is based on a study carried out between October 1983 and May 1984. The report contains many suggestions for program direction and improved procedures. Some of these may have been put in place in the interim and the committee regrets not crediting the Army or its appropriate agencies for so doing. The committee also notes that the existence of such a wide ranging study as this one often has in itself a saluatary effect on the institutions or organizations being reviewed.

In conducting its study, the committee received advice and assistance from a great number of individuals representing various Army units, government agencies, and private organizations. We thank them all.

The committee also wishes to thank Dennis F. Miller, executive director of the Board on Army Science and Technology, for his guidance in organizing and coordinating the study, and for his perspective in preparing this report. Thanks also go to Michael

Gaffen and Howard E. Clark, staff officers for the stockpile and technology assessment panels, respectively, for their efforts on the committee's behalf.

Similarly, thanks are due to John E. Wagner, who joined the study in its later phases and helped to coordinate the preparation of the final joint report, and to Jeffrey Cohn, who applied his editorial craft with skill. Finally, we want to thank Helen Johnson, Donna Broach, Lee Carlson, June Richardson, and Cheryl Woodward for their support throughout the study. Without their efforts and long hours, this report could not have been completed.

Contents

PART I - GENERAL

1 EXECUTIVE SUMMARY 1
Managing the Stockpile /1
Possible Use of Facilities After Agent Disposal /5
Technical Options /5
Instrumentation Needs /8
System Safety /8
Transportation /9

2 INTRODUCTION 11
History of Disposal Operations /20
Present Directions /21

PART II - REPORT OF THE STOCKPILE ASSESSMENT PANEL

3 STORAGE OF TOXIC CHEMICAL MUNITIONS 29
Monitoring /33
Inspection /33

4 RISK ANALYSIS FOR TOXIC CHEMICAL MUNITIONS 36
Review of Army Risk Calculations /36
Qualitative Analysis of Risk /41

5 ARMY OPERATIONS WITH RESPECT TO TOXIC CHEMICAL MUNITIONS 43

6 MEDICAL ASPECTS 46
Medical Support of the Chemical Mission /46
Medical Responsibilities Related to Personnel Status /47

7 SECURITY 49

8 LEGAL ASPECTS OF TOXIC CHEMICAL MUNITIONS 51
Legal Aspects of Specific Programs /53

9 STOCKPILE ASSESSMENT PANEL FINDINGS, CONCLUSIONS, AND RECOMMENDATIONS 55
Designing Munitions for Eventual Disposal /58
Maximum Credible Event /59
Relative Disposal Priorities /61

PART III - REPORT OF THE TECHNOLOGY ASSESSMENT PANEL

10 MAJOR ALTERNATIVES 67
Placement in the Deep Ocean /67
Thermal Processes /68
Chemical Processes /69
Using Nuclear Explosions for Disposal /71
Other Novel Concepts /71

11 PRINCIPAL ELEMENTS OF THE DISPOSAL PROCESS 73
Transportation /73
Unpacking /73
Gaining Access to Agent and Explosives /75
Destroying the Agent /76
Deactivating the Explosives /77
Decontaminating the Solids /77
Disposing of Wastes /78
Materials Handling /78
Verification /78
Monitoring Agent Concentrations /79

12 CURRENT FACILITIES AND TECHNIQUES 80
Drill and Transfer System /80
Chemical Agent Munitions Disposal System /80
Industrial Techniques and Research /85

13 PLANNED DISPOSAL PROGRAMS 87
BZ Disposal /87
Expedited M55 Rocket/M23 Land Mine Program /88
Johnston Atoll Stocks /89
Baseline Technology /91

14 OPTIONS FOR IMPROVED TECHNOLOGY 96
Thermal Process Options /97
Preparation Options /99
Simplified Configurations /107
"Steady Flow," Regenerative Bulk Container Processing /114

15 SYSTEM SAFETY 117
Safety: An Uncompromising Mandate /117
Scope of System Safety Activities /117
Management Practices /117
System Safety at Chemical Agent Munitions Disposal System (CAMDS) /119

16 HUMAN FACTORS CONSIDERATIONS 125
General Human Factors Requirements /125
Human Factors in Current or Planned Projects /128
JACADS /129
Government Versus Contractor Operations /132

17 TRANSPORTATION SAFETY CONSIDERATIONS 133

18 FINDINGS, CONCLUSIONS, AND RECOMMENDATIONS OF THE TECHNOLOGY ASSESSMENT PANEL OF THE TECHNOLOGY ASSESSMENT PANEL 137
Technology /137
System Safety /141
Human Factors /144

PART IV - APPENDIXES

A TOXICOLOGY OF CHEMICAL AGENTS 149
B STOCKPILE ASSESSMENT PANEL SITE VISITS 155
C STOCKPILE ASSESSMENT PANEL QUESTIONNAIRE 174
D TYPICAL RESPONSE TO QUESTIONNAIRE 177
E LEGAL CONSTRAINTS 185
F OVERVIEW OF SOME PROPOSED THERMAL TECHNOLOGIES 190
G ELEMENTS OF A SYSTEM SAFETY PROGRAM 193
H SUMMARY OF SYSTEM COSTS BY CATEGORY 198

REFERENCES 199

GLOSSARY OF ACRONYMS 211

GLOSSARY OF TERMS 215

Tables

1 Munitions Characteristics /14
2 Relative Magnitude of the Stockpile at Selected Army Depots /19
3 Completed Disposal Projects /22
4 Lethal Chemical Demilitarization Program—Major Tasks /23
5 Toxicity Values /38
6 One-Percent Lethality Distances Calculated by the Army for Maximum Credible Events at the Eight U.S. TCM Storage Locations /40
7 Relative Priority for Disposal by Agent, Munition Type, and Location /64
8 Baseline Technology for Disposal of Chemical Munitions: Destruction /82
9 Baseline Technology for Disposal of Chemical Munitions—Front-end Measures /84
10 Selected Criteria for Evaluating Alternative Thermal Concepts for the Disposal of the Obsolete Chemical Munitions and Agent Stockpile /100
11 Conventional Thermal Disposal Processes and Novel Processes Recommended by Contractors in USATHAMA's Technology Development Program /101
12 Elements of Comprehensive System Safety Program /118
13 Location of Safety Personnel with Chemical Weapons Responsibility /124
14 Chemical and Physical Properties of Agents /150
15 Toxic Properties of Agents /151

Figures

1 Location Map of U.S. Storage Sites /12
2 M55 Rocket and M23 Land Mine /15
3 105MM, 155MM, 8-Inch and 4.2-Inch Projectiles /16
4 Bomb, Spray Tank, and Ton Container /17
5 Physical Envelopes of Munitions /18
6 Igloo Storage Plan /31
7 Storage Igloo /32
8 Schematic of Present Practice /74
9 Typical Disposal Cost Versus Time /93
10 Cost Versus Operating Time for Disposal of Stocks at Newport Depot /95
11 General Disposal Options /98
12 Preparation Options for Steady Thermal Destruction /102
13 Vapor Pressure Expulsion of Burster Well /109
14 Simplified, Gravity Feed Rocket Shear /110
15 Simplified Cryofracture System /112
16 Simplified Cryofracture System /113
17 Simplified Device for Processing Agent Filled Ton Container /115
18 Army Safety Organization for Oversight of Chemical Munitions Disposal /123

Part I
General

1

Executive Summary

For more than half a century, the United States has maintained a stockpile of highly toxic chemical agents and munitions for possible use in a wartime situation. The United States maintains its stockpile principally to deter other countries from using such munitions against U.S. forces. Four basic chemicals are kept. These are the nerve agents VX, which is persistent in its effects, and sarin (GB),* which is nonpersistent; the mustard agents H, HD, and HT, which are usually referred to simply as H; and the hallucinogenic agent BZ.

These chemical agents are stored at eight U.S. Army depots in the Continental United States as well as on Johnston Atoll in the Pacific Ocean. The latter depot was not a part of this study. Each depot varies in size, in the type and number of agents and munitions in storage, and in its proximity to off-site civilian populations. Moreover, the agents are kept in a variety of containers and munitions—rockets, land mines, artillery and mortar shells, bombs and spray tanks, and bulk containers.

MANAGING THE STOCKPILE

The Army has a very good record of safely managing its stockpile of toxic chemical agents and munitions. All storage depots seem to be conforming with relevant Army regulations and procedures designed to ensure the safety and security of the stockpile. Further, the stockpile has remained relatively static; e.g., most movements of munitions and containers take place within each storage depot and are done for surveillance, maintenance, and management purposes. Only occasionally are very small laboratory samples sent from one depot to another for testing.

Most important, there have been no accidents and only three minor incidents in the last two years related to handling chemical agents and munitions.** In none of those cases was any toxic agent released

*See Glossary of Acronyms.

**The period covered by the site visit questionnaire (Appendix B).

to the outside atmosphere. Workers suffered only minor injuries; nearby residents were not injured at all.

Thus, the committee concludes that:

- The Army is competently managing the task of preserving the stockpile of toxic chemical agents and munitions.

Maximum Credible Event

Each depot prepares for possible accidents or incidents by planning for a "maximum credible event." The maximum credible event indicates the toxicological effects of a release for each type of available toxic chemical under different meteorological and atmospheric conditions based upon Army diffusion modeling. The Army has a set of standard procedures for computing the area in which adverse health effects are likely to occur should toxic chemicals accidentally be released. The main calculation is the distance downwind at which a 1-percent lethality will occur in an unprotected population.

In some cases, however, realistic scenarios could be designed to simulate events that, if they occurred, would have more severe consequences than the depot's official maximum credible event.

- The maximum credible event at each site should be reviewed critically for completeness and accuracy, especially in light of potential terrorist threats and natural disasters. The possible impacts of each maximum credible event should be evaluated as soon as possible.

Sensors

While generally quite good, two other areas of the Army's management of its chemical weapons stockpile require improvement. First, the Army uses perimeter detectors periodically to monitor storage igloos for leaking munitions and containers. Direct monitoring is done only when the igloos have to be entered for inventory or other routine inspection. Instead,

- Continuous monitoring of exhaust vents would provide better early detection of leakers and increase the safety of those who must enter the igloos.

Medical

Second, each depot has a medical unit that is responsible, among its other duties, for treating injuries resulting from toxic chemicals.

However, this responsibility seems to be regarded as a secondary one. Most medical officers lack specific training in treating injuries from chemical agents. In addition, these officers are rotated in such a way that incoming physicians, nurses, and other health professionals do not have an opportunity to learn from those whom they are replacing.

The committee concluded that:

- Most of the problems with medical personnel are amenable to straightforward solution.
- Priority should be given to the selection of properly qualified personnel who are then trained in dealing with the medical consequences of working with toxic chemicals prior to their assignment to the depots.
- Each medical contingent should have adequate reference material to treat chemical injuries.

Condition of the Stockpile

Regarding the stockpile itself, all chemical agents maintained by the Army are at least 16 years old and some are more than 40 years old. None has been manufactured since 1968. Some munitions have begun to leak. Many munitions have become obsolete or unserviceable. Many months would be required before significant additional quantities could be made ready for military use. This equals or exceeds the time required to manufacture new chemical agents and munitions.

While there is no evidence that any chemical agents, munitions, or their containers are deteriorating at an accelerating rate, parts of the stockpile are deteriorating. This poses some finite risk both to off-site civilian populations and to those who must work at the depot. It is also expensive to safeguard and maintain.

- The stockpiles of obsolete or unserviceable toxic chemical agents and munitions, including bulk stocks, should be destroyed as soon as possible. For the present time, however, storage is the only option.

The Army is currently loading burster charges into munitions already containing chemical agents. This makes them more useable as a military munition, but also makes them more difficult to dispose of safely.

- Given the age of most of its stock and the condition of its weapons, the Army should discontinue uploading burster charges into chemical munitions.

In addition, the condition of the munitions is uncertain from an ordnance standpoint. No test firings have been conducted since 1969.

To renew such tests, which were banned by law in 1969, the President and Secretaries of Defense and of Health and Human Services would have to concur and report to Congress--a complex and lengthy process.

Finally, international negotiations might lead to a treaty requiring the destruction of all chemical agents and munitions. Such disposal would, no doubt, require verification. At the same time, production of new, safer, binary compounds for use as chemical weapons may be linked, by law, to destruction of current stocks.

Thus, it seems appropriate (1) to destroy as soon as possible those obsolete and unserviceable munitions that pose the greatest risk to workers and nearby residents, and (2) to develop new technology that would enable the safe disposal of remaining stocks at the lowest feasible cost. This will require the construction of new disposal facilities or the possible transportation of chemical munitions from their current storage depots to places where disposal facilities are now or soon will be available.

M55 Rockets

Among the chemical munitions, the M55 rockets are the most dangerous items in the current stockpile. They are loaded with either agent VX or GB and have fuzes, burster charges, and propellants in place. M55 rockets are the source of the greatest number of leaking munitions and are the leading concern in each depot's maximum credible event because of the possible harm they can inflict on workers and civilian populations.

- The Army should give top priority to disposal of the M55 rockets as soon as possible.

There is no evidence that waiting for the development of more advanced technology for disposing of M55 rockets will reduce either costs or risks.

- Facilities to dispose of M55 rockets should be designed to be capable of being modified later to dispose of other chemical agents and munitions. Apparently the Johnston Atoll Chemical Agent Disposal Systems (JACADS) facility will be designed to provide such a capability and the M55 plants are being so designed. Due consideration should also be given to such design improvements as simplified shearing devices and decontamination furnaces that avoid rotary seals, which may be subject to leakage.
- <u>Moreover, the committee believes that safety must be the primary consideration for the disposal of all chemical munitions</u>. <u>Safety must come first</u>.

According to some early estimates, disposing of the entire stockpile could cost as much as $4 billion and take up to 20 years to

complete, using current technology. More recent estimates place the cost and duration at less than half those amounts. In any case, the task will be difficult and costly, and R&D efforts are under way to find less expensive technological approaches for both safe and effective disposal.

POSSIBLE USE OF FACILITIES AFTER AGENT DISPOSAL

The Department of Defense (DOD) generates a substantial quantity of industrial and hazardous waste that needs to be disposed of in an environmentally acceptable manner. It may be possible to reduce substantially the life-cycle costs of the chemical agent disposal system if all the incinerators could be subsequently used by federal, state, and local governments and private industry to dispose of hazardous wastes. The life-cycle costs could similarly be reduced if the plants were also designed to produce steam and/or electricity, which could be used by DOD.

- The Army should explore the potential for use of chemical agent disposal facilities for disposal of DOD wastes, and perhaps for wastes and hazardous materials from other sources. This exploration should precede final facility design in order to accommodate design features that might economically and safely facilitate such future use.

TECHNICAL OPTIONS

Prior to 1972, most obsolete chemical agents and munitions were disposed of by dumping them in the deep ocean. In 1969, however, a National Academy of Sciences report recommended that ocean disposal be avoided and that new, safe, and environmentally acceptable methods be sought. In 1972, Congress prohibited ocean disposal.

One alternative is to use chemical processes such as hydrolysis, caustic neutralization, anhydrous chlorinolysis, and aqueous chlorinolysis. Such methods, however, are difficult and slow for the agents and munitions in the current stockpile, although they could be used to decontaminate the disposal plant and equipment. Chemical methods also produce large quantities of hazardous waste materials that must be stored until acceptable disposal methods are found.

Another suggested alternative is to place the chemical agents and munitions in underground cavities and destroy them in a nuclear explosion. The agents and munitions would not require unpacking and would be completely destroyed. However, the method faces great geological and political hurdles, especially in finding acceptable sites, in creating the cavities, and in transporting the chemical munitions from their existing storage depots.

More conventional thermal processes destroy chemical agents either by incineration or by pyrolysis, in which the agents are heated in the absence of oxygen. The Army has demonstrated that all four agents can

be destroyed effectively by incineration. A facility at Rocky Mountain Arsenal near Denver, Colorado, was used in the 1970s to burn more than 3,000 tons of mustard. Additionally, an experimental pilot plant at Tooele, Utah, has been used to incinerate more than 14 tons of GB and three tons of VX. Most importantly, these operations have been conducted with no chemical-related injuries or environmental releases.

The Army has also studied various novel technologies that might be used in disposal processes. Of the dozens examined, only one is advanced enough to be potentially useful. Called "in-shell combustion," it involves incinerating the agent within its munitions case. The concept might be valuable when used with other thermal processes or in a mobile disposal system.

- Considering the above advantages and disadvantages of each disposal method, thermal destruction is the preferred means for disposing of the current stockpile of chemical agents and munitions. The Army has already selected thermal destruction as the most appropriate method. The committee supports this decision.

Thermal disposal requires destruction of the chemical agent, deactivation of associated explosives and propellants, decontamination of metal parts, and disposal of packing material or containers. The process typically involves moving the chemical agents and munitions from their storage site to the disposal facility, unpacking the containers, and gaining access to the agent and explosives.

There are several design constraints in developing thermal disposal facilities. First, disposal must be conducted in a way that ensures the safety of all personnel and nearby residents, and also protects the environment. Second, the project aims to destroy, not create, agents; therefore, it has a terminal nature.

Current Disposal Technologies

Two programs are already in operation to dispose of obsolete or unserviceable chemical agents and munitions. One is the Drill and Transfer System (DATS), which is based at the Army depot in Pine Bluff, Arkansas. DATS consists of a small, trailer-mounted system that travels from depot to depot to remove and store toxic chemical agents from leaking munitions.

The second program is the Chemical Agent Munitions Disposal System (CAMDS), a prototype research facility at the Army depot in Tooele, Utah. It tests various chemical and thermal processes for disposing of all agents and munitions. The high initial estimates for the cost and duration of a disposal program reflect, in part, the experience with such an experimental facility.

A third disposal facility is scheduled to be built on Johnston Atoll to destroy the chemical agents and munitions stockpiled there.

the facility, known as Johnston Atoll Chemical Agent Disposal System (JACADS), will be based on the equipment and processes used at CAMDS. Yet another facility is planned for the Pine Bluff depot to dispose of the BZ stored there.

The "baseline technology" developed at CAMDS can serve as a reference point against which new or improved equipment and processes can be judged. The technology at CAMDS includes a straightforward punch and shear to gain access to the agent in bulk containers, rockets, and land mines, and to disassemble artillery and mortar shells. A rotary kiln is used to deactivate explosives and an electrically heated discharge conveyor is used to decontaminate metal fragments. A large three-chamber furnace is used to volatize the chemical agent and decontaminate metal parts.

Other key equipment at CAMDS includes a liquid incinerator for agents drained from munitions and a separate incinerator for dunnage, an explosive containment chamber, dryers to extract salts (which must be stored) from scrubber liquids, and pollution control systems, which will ensure that toxic vapors or other industrial pollutants are not emitted into the air.

Although based on CAMDS, the JACADS and M55 disposal programs are markedly improved and simplified. For example, a rocket shear (currently being tested at CAMDS) will replace the original saw. Multielement linear conveyors between operation stations are to be replaced by "carousel" production machines. Also, a more accessible layout is being designed.

While the JACADS design is much improved over CAMDS, numerous opportunities still exist to further simplify the thermal disposal process. Agents in bulk containers can be destroyed with equipment that is simpler and less costly to operate than the large, three-chambered furnaces at CAMDS. Volatizing bulk agent is not only a slow process, but a difficult one to control. The three-chambered furnace was designed out of concern that mustard and other agents might have solidified or jelled in storage sufficiently to prevent drainage. Recent tests, however, have shown that this may not be the case. More economical drainage processes are under consideration.

Designs that would provide a steadier flow of materials through the disposal system would similarly simplify and speed up the process. One way would be to use vapor pressure instead of a somewhat fragile mechanical device to force the burster well out of artillery shells.

- The Army should explore such alternatives as punching and draining these bulk containers with subsequent combustion of the agent in controlled-feed liquid incinerators (perhaps along with agent drained from munitions). Simpler decontamination procedures should be developed or, alternatively, containers might be chemically decontaminated, crushed to reduce volume, and shipped safely to a central site for final heat treatment or possible ocean disposal.

This report discusses several specific design simplifications for the Army's consideration.

Because of the number and variety of different munitions, some of which have manufacturing defects that are poorly documented, disassembly is an inherently complex operation. Cryofracture has therefore been proposed as a means to simplify the mechanical disassembly of munitions.

Cryofracture uses liquid nitrogen to cool munitions casings to the point where they become brittle and are easily fractured with either a drop hammer or press. The process appears quite promising, having already been successfully demonstrated on some artillery shells, but not yet on fuzed munitions. M55 rockets, however, have aluminum casings that do not become brittle and might even be strengthened at liquid nitrogen temperatures. Cryofracture is not appropriate for them.

The first consideration in any disposal process is safety. It is significant that because of its concern for safety the Army has not had any fatalities or serious injuries resulting from disposal operations. To date the Army has safely and successfully incinerated more than 3,100 tons of mustard and has chemically neutralized more than 4,200 tons of nerve agent. However, an excellent safety record is no guarantee that accidents will not happen in the future. Nor is it a guarantee that CAMDS technology and techniques will be used safely at other depots if the depot personnel are less experienced and not well trained in disposal methods.

INSTRUMENTATION NEEDS

As part of a safety effort, better monitoring equipment is needed. For example, no satisfactory techniques have yet been demonstrated for monitoring, in real time, low-level concentrations of VX in air or stack emissions.

- The Army should undertake an accelerated program to develop instruments that can warn operators of disposal facilities before agent concentrations reach hazardous levels. These might include instruments and auxiliaries whose critical parts operate at temperatures in excess of the boiling point for VX ($300^{o}C$).

SYSTEM SAFETY

One way to help ensure the safety of future disposal operations is to combine deductive analytical techniques with inductive ones in the design process. The deductive approach assumes an undesirable event and searches for its possible causes. An inductive analysis begins at the level of a component failure and follows that through to resulting undesirable events. Used together, these two approaches allow for cross-checking that enhances the search for all potential hazards in the disposal process.

The safety effort at CAMDS has been limited to what was deemed feasible for a pilot facility. Thus, it is not easy to trace the timeliness and disposition of various safety recommendations. Nor is there any indication of an ongoing effort to include a formal safety analysis in design changes.

The safety program at JACADS is an improvement over that at CAMDS. Nevertheless, some analyses lack appropriate studies of job safety and task assignments. Nor are emergency situations or operator overloads adequately addressed. Analyses performed to date are limited to primary failures and do not consider how interaction among different equipment components might produce multiple failures. The safety analysis at JACADS is continuing; however, it still could include these missing elements.

Some human factors considerations have been included in the CAMDS design and development activities, but they are neither extensive nor well integrated. JACADS planners have developed additional criteria for human-factors engineering, particularly in the area of the human-machine interface. However, there is no task analysis and no specific methodology or criteria for allocation of functions. A more comprehensive and integrated human-factors effort is necessary if personnel errors and performance degradation are to be minimized. More formalized training plans also need to be developed.

- An adequately staffed organization of system-safety engineers, human-factors engineers, and other safety-related specialists should be assembled. They should focus exclusively on the program to dispose of chemical munitions to ensure a continuous, coherent safety program throughout the life of the program. This organization should be responsible for:

  - Immediately installing an information system to track and correct identified hazards.
  - Ensuring that quantitative analytic techniques are used to identify single-, dual-, and multiple-fault paths, where appropriate. Additionally, these techniques should be cross checked--inductive against deductive and vice versa--and be appropriately applied throughout the life cycle of the system.
  - Conducting a timely safety and human-factors review of all engineering and management changes, designs, operations, and procedures.

TRANSPORTATION

Finally, the Army has yet to decide whether to build disposal facilities at all eight depots in the continental United States, to build them at only the five depots where M55 rockets are stored, or to build just a few regional disposal facilities and consolidate the chemical agents and munitions for ultimate disposal at these sites.

What is not well known is whether it would be safer or less costly to dispose of chemical agents and munitions at their current storage site or to transport them to another depot for disposal.

- The Army should undertake an expedited depot-by-depot assessment of the risks and costs of transporting munitions for disposal at consolidated sites. These results can then be compared with on-depot disposal options. Such a study should examine the potential for carrying stocks from Aberdeen and Umatilla by U.S. Navy vessels to Johnston Atoll for disposal. Transporting stocks from Tooele to Umatilla for subsequent shipment to Johnston Atoll is another option that should be considered.

The Army's transportation considerations are dominated by the very high costs experienced in earlier transport operations. In addition, past contractor studies are contradictory--showing truck transport to be the least costly mode in one study and rail transport in another. Furthermore, hazard and risk analyses have not been done with sufficient rigor either for transport or on-site disposal to permit a meaningful comparison of options.

The Army is considering, but is not now planning, off-depot transportation of these agents. The committee does not recommend such transport. However, since it has not studied the issue in detail, the committee does not have a quantitative basis to dismiss the option since transportation does offer some attractive advantages.

The committee believes that transporting munitions such as M55 rockets to centralized disposal sites would not be safer than on-site disposal. The M55 rockets contain the highest fraction of explosives (and propellant) relative to total weight, and they are fuzed. Additionally, detonations or fires are known to provide enough heat to initiate further detonations. Finally, by design, they can move under their own propulsive power once ignited.

- Of all chemical munitions, the M55 rocket is the least likely candidate for safe and economical transport. M55 rockets should be destroyed where they are located because they exhibit the highest proportion of leakers and are the weakest agent-containment vessel.

In general, the committee believes that disposal at properly designed and appropriately scaled on-site facilities will cost less than transportation to and disposal at large, central facilities. However, the recommended transportation study should be conducted. The committee is concerned that delay in disposing of the stockpile in the face of opposing public pressures can only result in penalties in cost and safety.

2

Introduction

For more than half a century, the United States has maintained a stockpile of toxic chemical agents and munitions for possible use in wartime. The United States maintains its stockpile principally to deter other countries from using such weapons against U.S. forces.

The U.S. Army maintains all chemical weapons for the U.S. armed forces. They are stockpiled at eight sites in the continental United States. These are the Edgewood area at Aberdeen, Maryland; the Lexington-Blue Grass Depot in Richmond, Kentucky; and the Army depots in Anniston, Alabama; Pine Bluff, Arkansas; Pueblo, Colorado; Newport, Indiana; Tooele, Utah; and Umatilla, Oregon. In addition, the Army stores chemical munitions on Johnston Atoll in the Pacific Ocean southwest of the Hawaiian Islands. This study was concerned only with the eight sites in the continental United States. The geographic location of all nine sites is shown in Figure 1.

The toxic chemicals stored in the United States comprise four basic types. These are the persistent nerve agent VX and the nonpersistent nerve agent sarin (GB), both of which belong to a family of organophosphate chemicals; the mustard agents H, HD, and HT;* and the hallucinogenic agent BZ, which was developed as an incapacitating agent. These agents are discussed in greater detail later in this chapter and in Appendix A.

Additionally, the Army has small laboratory quantities of the chemical agents lewisite, chlorine, and phosgene. Lewisite is a vesicant that causes skin blistering, while chlorine and phosgene are lung irritants. The Army's stockpile of these agents dates mostly from World War I. Because they are already scheduled for disposal, this report does not address them.

Chemical agents are stored in a variety of containers and munitions--rockets, land mines, artillery and mortar shells, bombs and

*The mustard agents H, HD, and HT all refer to various levels of purity of the same basic chemical compound. In general, this report will ignore the distinction and refer to all mustard agents by the designation H.

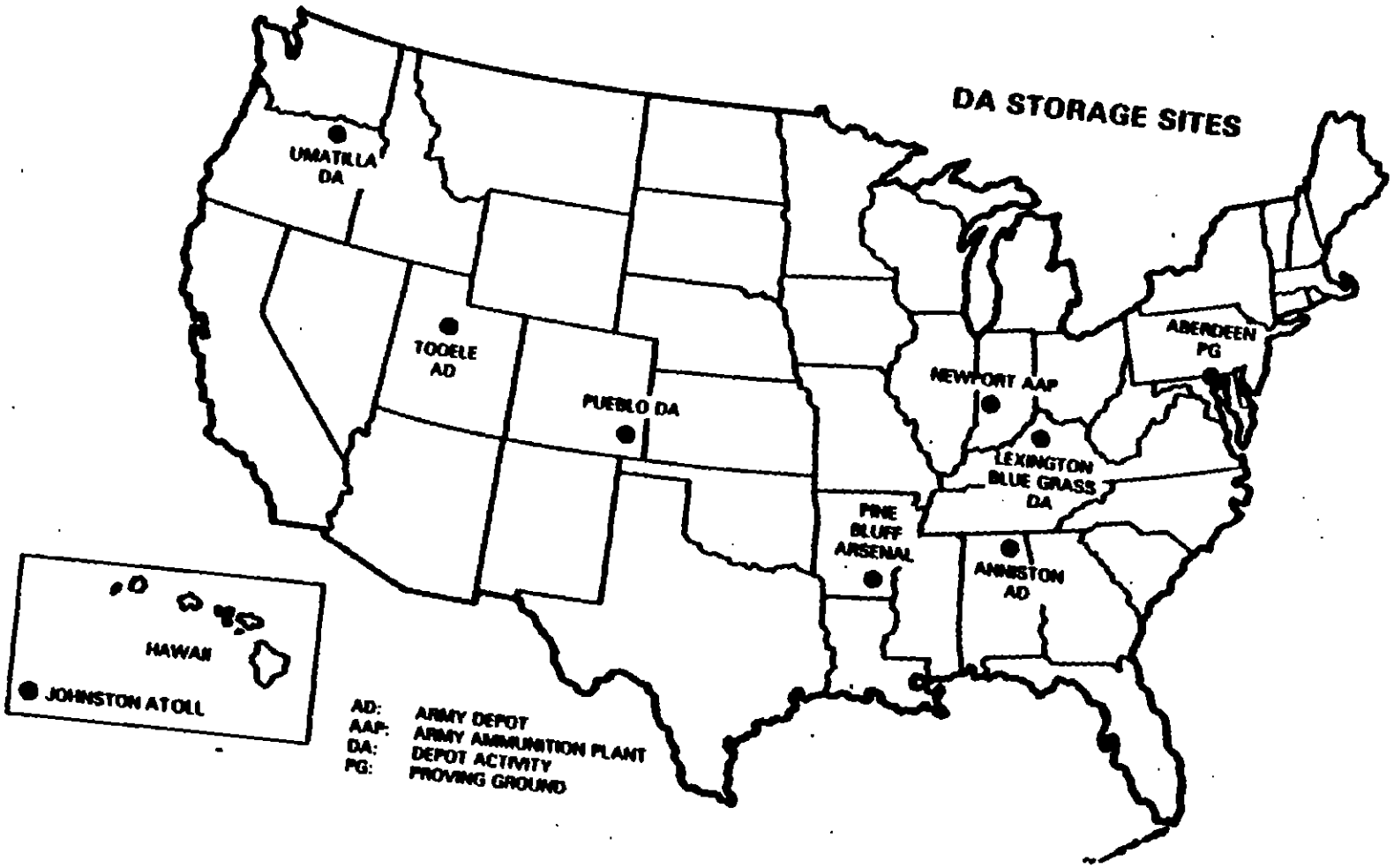

FIGURE 1 Location map of U.S. storage sites.
Source: USATHAMA.

spray tanks, and bulk containers. Some already contain fuzes and burster charges (explosives used to rupture the munitions case and disperse the contained chemical agent), while others do not. Munition characteristics are shown in Table 1.

The M55 rocket is stored as a complete round with shipping and firing tube, rocket motor, rocket-motor igniter, agent-filled warhead, burster charge, and fuze (see Figure 2). The structure consists of a thin-walled aluminum container with a central well that holds the burster charge.

Bulk containers are standard 1-ton tanks in which GB, mustard, or VX are stored. To be used, the chemical agents would have to be removed from the bulk containers and loaded into munitions. In the interest of military readiness, the U.S. Army Materiel Development and Readiness Command (DARCOM) is installing burster charges in chemical munitions that are not classified as obsolete or unserviceable. Spray tanks and MC-1 MK94 bombs, the latter containing GB, are stored without explosives. If required, explosive charges would be added in the field.

In addition to bulk containers, VX is contained in M23 land mines, which are packed three to a shipping package; in M55 rockets, which have fuzes, bursters, and propellants in place; and in artillery shells (8-inch artillery shells). Some M55 rockets also contain GB, as do some artillery and mortar shells. Similarly, mustard is loaded in some artillery and mortar shells as well as in bulk containers. Figures 2, 3, and 4 show the M55 rocket, various bombs and mortar shells, and bulk containers. The relative sizes of these munitions are shown in Figure 5.

The size and contents of the stockpile differ greatly from depot to depot. Since no two sites are exactly alike, there is no "typical" depot. Detailed information on the precise amounts and types of chemical agents and numbers of munitions at each site is classified. Table 2 provides further information on which agents and munitions are stored at five of the eight Army sites in the continental United States for which data are available.

Storage includes both a passive as well as an active maintenance program. Munitions are cleaned, rust is removed, and they are painted. This process is also performed on 1-ton bulk containers. Additionally, the munitions are regularly inspected and inventoried, a process that can require their being handled.

Munitions are subject to more active handling in two cases. In the first, unserviceable munitions are demilitarized under the Army's Drill and Transfer System (DATS). In the second case, lethal agents and munitions are sampled randomly for possible leaks or other defects. The selected munitions are drilled and a sample of the agent is removed for analysis. The munition is then tapped and a plug inserted. It subsequently receives the treatment accorded to "leakers."

TABLE 1 Munitions Characteristics

ITEM	AGENT	FUZES	BURSTERS*
4.2" mortar shells	HD	Yes	Yes
	H	Yes	Yes
	HT	Yes	Yes
105 mm cartridges (i.e. projectiles plus propellant charges)	GB	Yes	Yes
105 mm projectiles	GB	No	No
	HD	No	Yes
	H	No	Yes
	HT	No	Yes
155 mm projectiles	VX	No	Yes
	GB	No	Yes
	HD	No	Yes
8" Projectiles	GB	No	Yes
	VX	No	Yes
Bombs	GB	No	No
Spray tanks	VX	No	Not Applicable
Land mines	VX	Yes	Yes
M55 rockets	VX	Yes	Yes
	GB	Yes	Yes

*The Army is currently in a process to improve readiness by installing burster charges in certain projectiles. Those actions may change some details of this table.

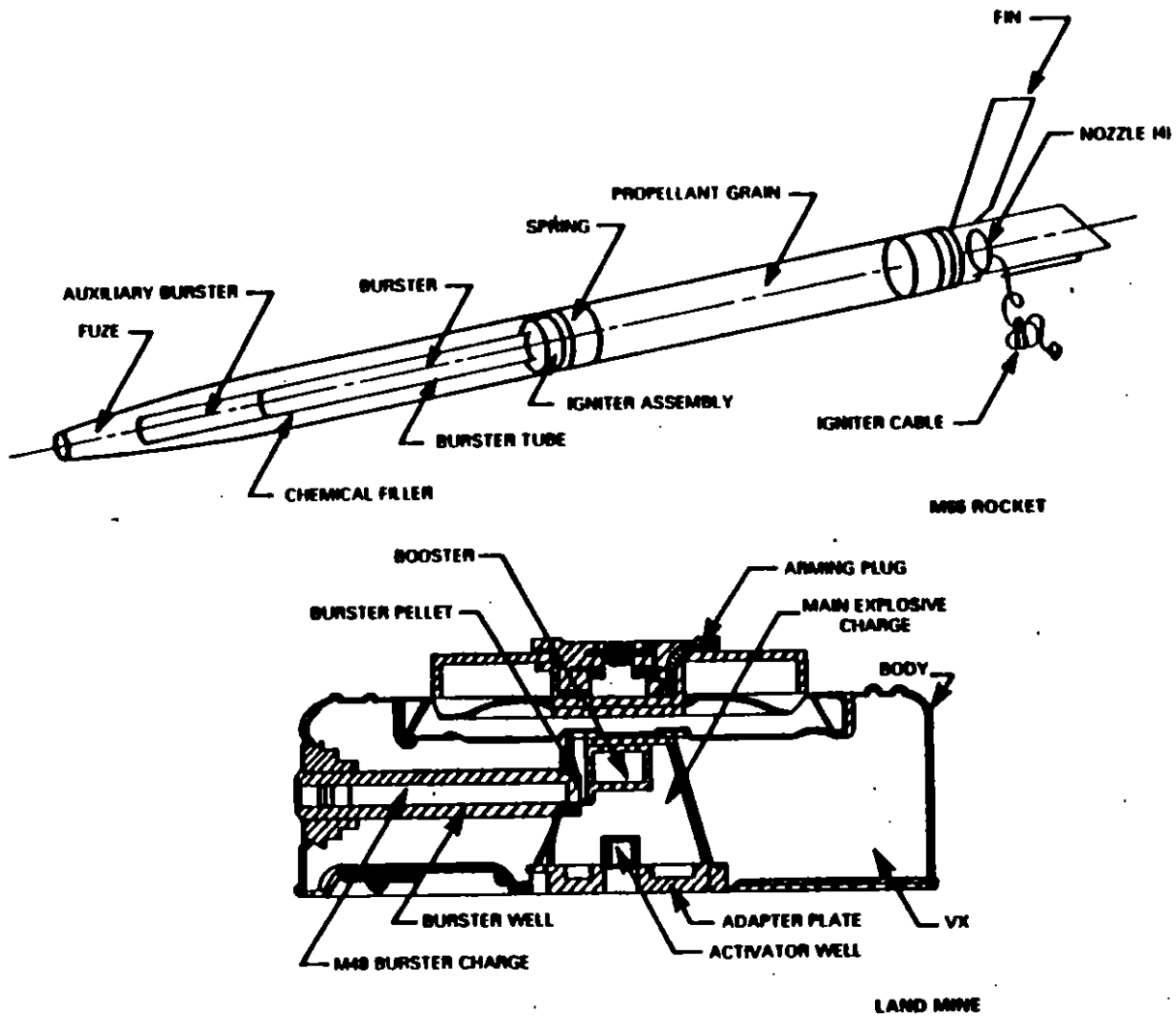

FIGURE 2 M55 rocket and M23 land mine.
Source: USATHAMA.

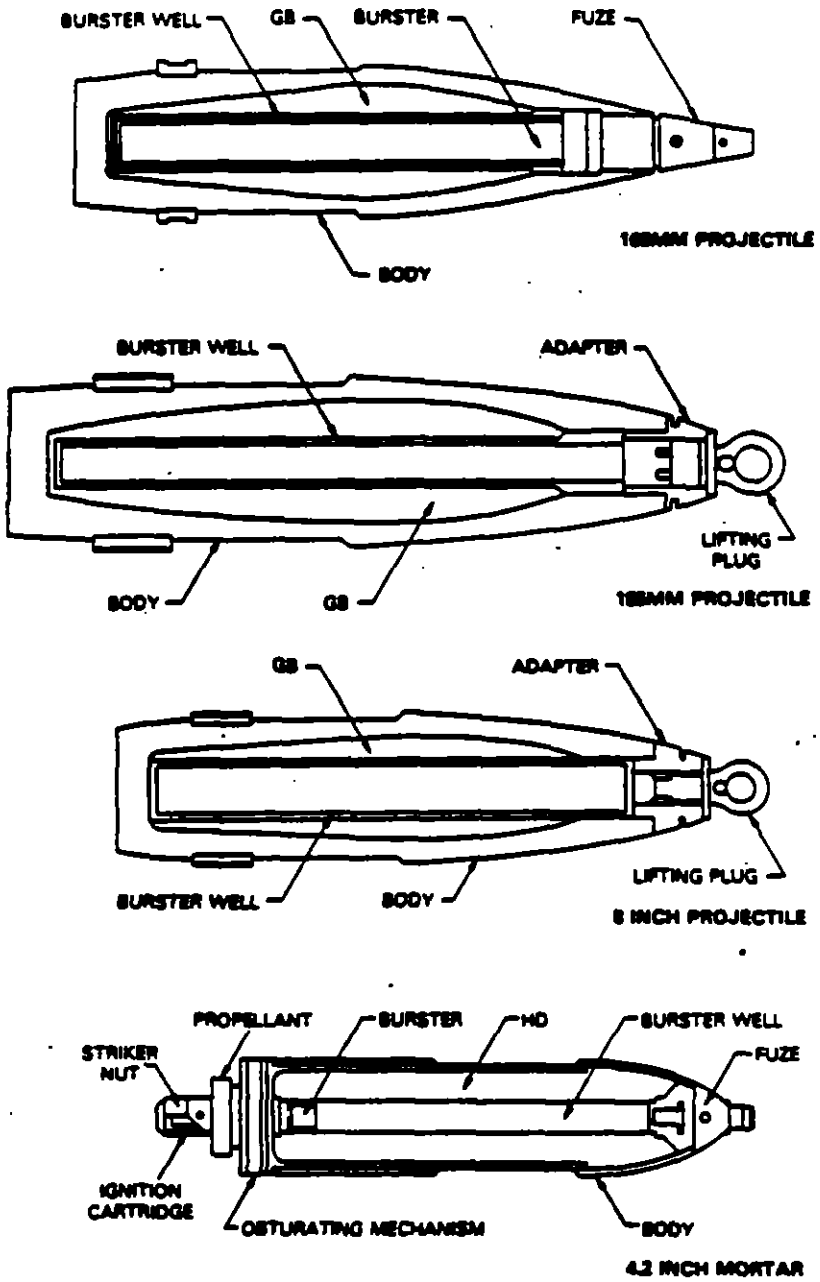

FIGURE 3 105MM, 155MM, 8-inch and 4.2-inch projectiles.
Source: USATHAMA.

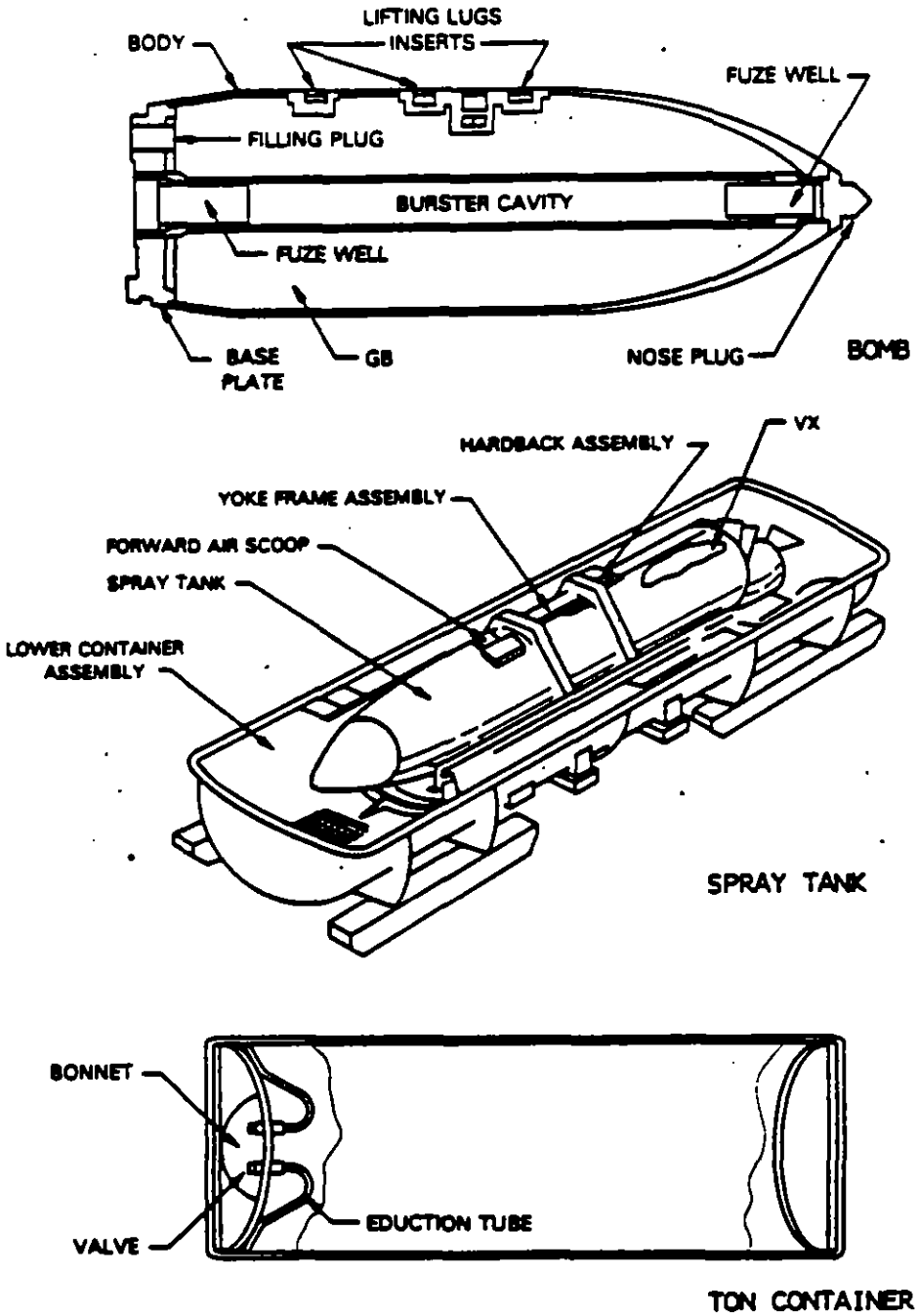

FIGURE 4 Bomb, spray tank, and ton container.
Source: USATHAMA.

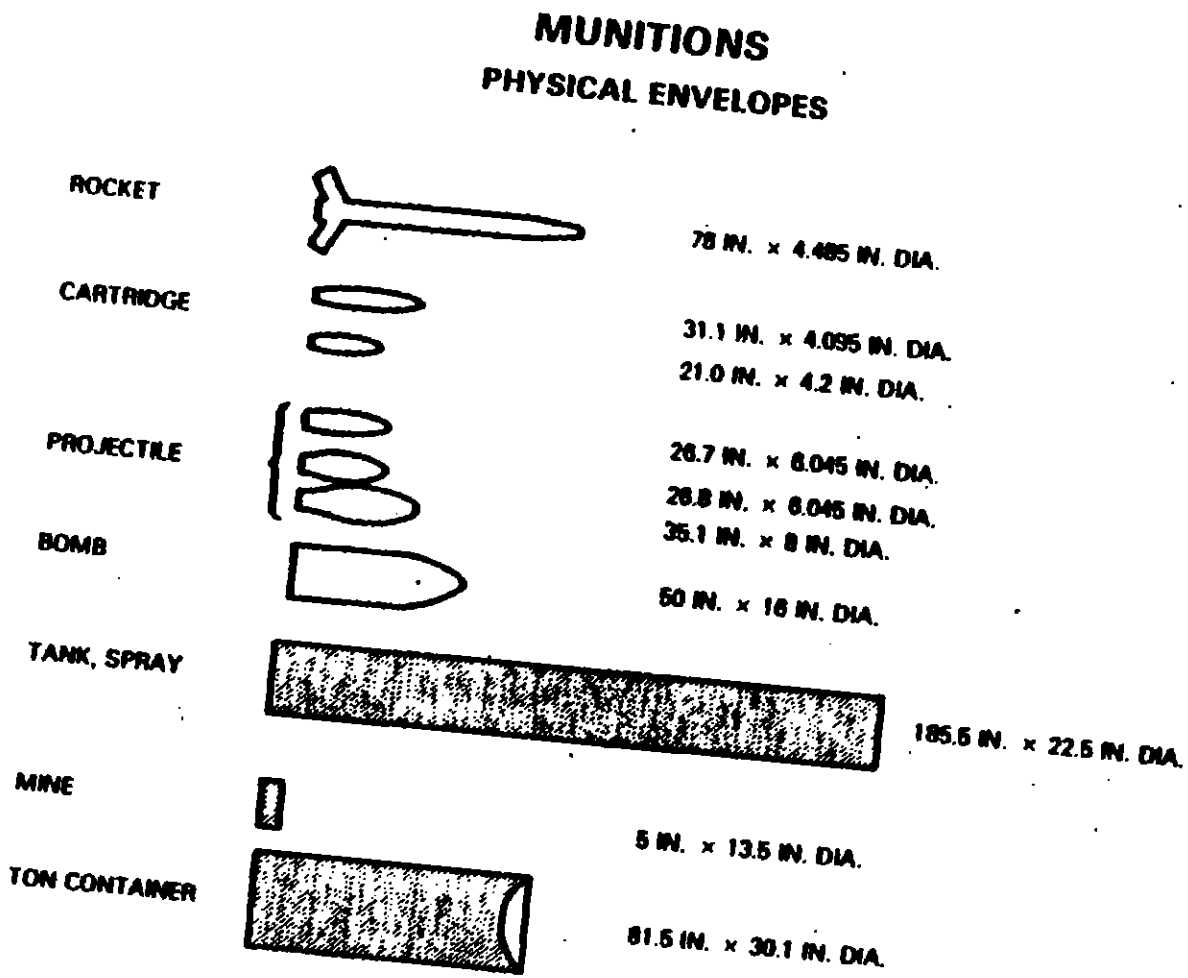

FIGURE 5 Physical envelopes of munitions.
Source: GA Technologies.

TABLE 2 Relative Magnitude of the Stockpile at Selected Army Depots

DEPOT	TYPES OF FILLER	TYPES OF MUNITIONS	TONS OF MUNITIONS
Anniston	GB, VX, HD, H, HT	Artillery, Rockets, Mines, Bulk	22,500
Lexington-Blue Grass	GB, VX, HD, H, HT	Artillery, Rockets	4,000
Tooele	GB, VX, HD, H, HT	Artillery, Bombs, Rockets, Mines, USAF Spray Tanks, Bulk	52,000
Umatilla	GB, VX, HD, H, HT	Artillery, Bombs, Mines, Rockets, USAF Spray Tanks, Bulk	17,000

Passive storage regulations require that all toxic chemical munitions be placed in a special restricted area. All individuals who work with these munitions must have clearance to even approach this high-security exclusion area. The exclusion area is surrounded by a double perimeter fence that is lighted at night. Access to the area is governed by the extensive security requirements outlined in Army documents AR 50-6 and AR 50-6-1. A well-armed guard force is always on duty.

With one exception, all munitions are stored in covered igloos. The exception is bulk mustard, which is stored in igloos, covered warehouses, and in the open with antiaerial devices (to prevent removal by helicopters, for example) in place. The igloos also have individual security systems.

The munitions and bulk agents are inspected and monitored at regular intervals. Army document SB 742-1 governs the schedule and requirements for inspections. Monitoring is controlled by DARCOM-R 385-11, 385-102, and SB 742-1.

Leaking ammunition is overpacked and segregated from other munitions. Leaking bulk containers are either repaired or the agent is transferred to a serviceable container. Leakers are reported to higher authorities.

HISTORY OF DISPOSAL OPERATIONS

No chemical agents or munitions have been manufactured in the United States since 1968. Thus, all those in the U.S. arsenal are at least 16 years old and many are 40 years old or older. Further, except for maintenance, laboratory, and safety purposes, they have rarely been moved. Some leaking munitions have been discovered and sealed in metal containers (see Chapter 3).

The year 1969 was a pivotal date in the disposal of chemical agents and munitions. Prior to that time, there were three common approaches to disposal: deep ocean dumping, land burial, and open-pit burning. During 1967 and 1968, for example, 1,706 concrete "coffins"--each weighing more than 6 tons and containing 30 M55 rockets filled with GB--were sunk in the Atlantic Ocean east of the Naval Ammunition Depot in Earle, New Jersey, at a depth of 7,200 feet (NAS, 1969).

Anticipating further ocean disposal under Operation CHASE, the Department of Defense's (DOD) director of defense research and engineering requested that the National Academy of Sciences (NAS) assess the hazards of such disposal and alternative plans. The 1969 NAS report assumed that "continuing inaction will not reduce the hazards of eventual disposal of the chemicals and munitions intended for disposal in the 1969 Operation CHASE, and in some instances will increase them."

The report concluded:

> It should be assumed that all agents and munitions will require eventual disposal and that dumping at sea should be avoided.

Therefore, a systematic study of optimal methods of disposal on appropriate military installations, involving no hazards to the general population and no pollution of the environment, should be undertaken. Appropriately large disposal facilities should be regarded as a required counterpart to existing stocks and planned manufacturing operations. As the first step in this direction, we suggest the construction of facilities for gradual demilitarization and detoxification of the remaining M55 rockets.

Three years later, the Marine Protection, Research, and Sanctuaries Act of 1972 (PL 92-532) prohibited any further ocean disposal of chemical agents. Significant quantities of chemical agents subsequently have been destroyed using other methods (see Table 3). From 1969 until September 1976, more than 3,000 tons of mustard agent were incinerated and 21,000 cluster bombs containing more than 2,000 tons of GB were destroyed at the Rocky Mountain Arsenal in Denver, Colorado (U.S. Army, 1982).

In September 1979, the prototype Chemical Agent Munitions Disposal System (CAMDS) began operation in Tooele, Utah (U.S. Army, 1982). CAMDS was designed to test various chemical and thermal disposal processes. It was not designed for large-scale disposal activities. CAMDS has been used to evaluate technology for caustic neutralization and incineration of GB, VX, and mustard. More than 19,000 projectiles and 14,000 rockets, all containing GB, have been destroyed by CAMDS.

The Army completed a successful pilot test of the Drill and Transfer System (DATS) in February 1980 (U.S. Army, 1982). DATS is a small, trailer-mounted system that is moved from one storage site to another to remove chemical agents from munitions that are leaking, unserviceable, unrepairable, or obsolete. After the agent has been drained for safe storage, the munition casing is chemically decontaminated. The drained agent, scrap metal, and inert munition bodies are stored to await final destruction. Consistent with its test mission, DATS can process only about one item per hour.

PRESENT DIRECTIONS

The U.S. Army's Toxic and Hazardous Materials Agency (USATHAMA) currently has seven distinctly different disposal tasks under way (see Table 4). The project descriptions here are based on publications (U.S. Army, 1982) and oral updates furnished by USATHAMA.

Planned Disposal Programs

The Army already has plans to dispose of some parts of the chemical agent stockpile. One plan aims to dispose of the entire stockpile of the mind-altering drug BZ, which is stored at the Pine Bluff Arsenal. Construction is expected to begin in 1984 on a facility to dispose of BZ (see Chapter 13).

TABLE 3 Completed Disposal Projects (As of June 1983)

TASK	LOCATION	COMPLETED	AGENT (thousan of pounds)
Leaking M55 Rockets	Johnston Atoll	Nov 73	.2
Bulk Mustard	Rocky Mountain Arsenal	Mar 74	6,190.2
GB in Underground Tanks	Rocky Mountain Arsenal	Nov 74	382.7
Agent in Concrete Drums (Phase I)	Edgewood Arsenal	Aug 75	32.4
GB in Ton Containers	Rocky Mountain Arsenal	Nov 75	3,605.2
Honest John GB Warheads M139 Bomblets	Rocky Mountain Arsenal	Aug 76	76.5
M34 GB Cluster Bombs	Rocky Mountain Arsenal	Sep 76	4,129.6
M55 Rocket Residues	Dugway Proving Ground	Sep 76	53.2
Chemical Bomblets	Dugway Proving Ground	Sep 77	17.4
Hydrogen Cyanide Bombs	Tooele Army Depot	Nov 78	.3
DATS - Pilot Test	Dugway Proving Ground	Feb 80	.3*
- Operations	Pine Bluff Arsenal	May 81	.3*
	Anniston Army Depot	Jul 82	.3*
	Lexington-Blue Grass AD	Jul 83	1.1
CAMDS - M55 GB Rocket	Tooele Army Depot	Jun 81	128.0
105mm & 155mm GB			98.0
ID Sets - (Multiple Agents)	Rocky Mountain Arsenal	Jan 83	36.7
Phosgene (Carbonyl Chloride)	Rocky Mountain Arsenal	Sep 82	618.4

*Transferred to shipping containers

TABLE 4 Lethal Chemical Demilitarization Program--Major Tasks

PROJECT	LOCATION	COMPLETION	STATUS
Operational Projects			
- DATS			
Leaking and recovered chemical munitions	Multiple	FY84	Operations
- CAMDS	TEAD	FY88	Process Evaluations
Development Project			
- BZ agent/munitions	PBA	FY88	Process Development FY84 MCA
- JACADS	Johnston Atoll	FY92	Process Development FY85 MCA
- M55 rocket	Multiple	FY92	Process Development FY86 MCA
Long-Range Projects			
- RDT&E program	NA	FY89	Laboratory/Bench Testing
- Stockpile	Multiple	FY2001	Planning/Studies

More important are the Army's plans to dispose of chemical agents and munitions shipped from Okinawa to Johnston Atoll in 1971. They were to have been stored in the United States, but Congress amended t Foreign Military Sales Act (PL 91-672) to prevent their entry into th country.

Because Johnston Atoll lacks sufficient igloo space, some chemical weapons are stored in metal warehouses. A substantial part of the stockpile consists of obsolete, leak-prone M55 rockets. The Army estimates that about 40 percent of the munitions stored on Johnston Atoll are unserviceable (USATHAMA, 1982a).

In March 1981, the Army organized USATHAMA to develop and construct a facility, using technology developed at CAMDS, that would be adequat to dispose of all chemical stocks on Johnston Atoll. Current plans provide for a facility to destroy the entire stockpile, but, initially process equipment is to be procured only for M55 rockets. A decision concerning further process equipment is to be made in 1984. Construction is to begin in 1985 (see Chapter 13).

By modifying the mechanical, munitions-handling system, the facilities designed to dispose of M55 rockets could also be used to dispose of M23 land mines. The Army has not yet decided whether to procure the additional handling equipment needed to deal with these mines. The expedited M55/M23 program would use technology demonstrate at CAMDS.

If current plans are to be implemented, the Army will need additional military construction funding in 1986 for the Umatilla, Lexington-Blue Grass, and Anniston depots where M55 rockets and M23 land mines are stored. The M55 and M23 stocks at Tooele would be disposed of (using the existing CAMDS facility) in the mid-1980s. Starting in 1988, the BZ facilities currently planned for Pine Bluff would be modified to dispose of M55s and M23s.

Technology Development Program

Even after all weapons containing BZ, all M55 rockets, all M23 land mines, and all stocks on Johnston Atoll have been destroyed, substantial quantities of chemical munitions and agents will still remain in the U.S. stockpile. The Army's Research, Development, Test, and Evaluation (RDT&E) program is aimed at identifying the safest and least expensive way to use the technology and facilities developed in these expedited projects, or any appropriate emerging technologies, for destroying the remaining stocks. USATHAMA, however, has not been directed or authorized to proceed with destruction of that stockpile. This report does not address the question of whether or not USATHAMA should.

The Army's RDT&E program has involved a wide search for existing industrial or experimental technologies that might be used to dispose of remaining stocks. The combined literature reviews conducted by Army contractors examined about 300 documents on chemical techniques, 760 on

thermal techniques, and 10 on nuclear-explosive destruction. Nearly 60 additional and unconventional approaches were also explored, including geologic plate subduction, destruction in volcanoes, high velocity impact, and biological destruction. More than 1,000 documents referring to various mechanical processes were considered, although some might have been counted more than once (Shatto, 1983).

By applying such criteria as safety, disposal of process wastes, maintainability, and reliability, the list of possible technical approaches was narrowed. For those ideas that survived preliminary scrutiny, economic analyses were conducted, further narrowing the field.

A full systems analysis (Shatto, 1984b) was, therefore, applied to only two chemical approaches, eight thermal technologies, one nuclear explosion, one "novel" approach, and two mechanical techniques. Each analysis involved evaluation of technological feasibility; an analysis of throughput, reliability, availability, and maintainability; and, finally, a detailed estimate of life-cycle costs. Since no system with a recognized safety problem would have advanced to this stage, relative safety was not considered in these analyses.

Based on these analyses, USATHAMA decided to:

- Continue research on cryofracture (i.e., cooling artillery projectiles to very low temperatures where they become brittle and relatively easy to crack) as a method for gaining access to the chemical agent, combined with the use of a rotary kiln for destroying the agent and decontaminating the shell fragments. (In contrast, bulk containers would be penetrated by heat activated chemicals and multiple electrically heated chambers would be used to volatilize the agent for incineration.)
- Continue an effort to demonstrate the feasibility of incinerating the chemicals within their containers, particularly artillery shells. Systems for such "in-munition" incineration might be transported from depot to depot.
- For clarification, conduct laboratory studies on production of difluoro (methyl phosphonic difluoride--one of two chemical components used in binary weapons) as a by-product of chemically destroying GB.
- Examine other possible ways to reduce costs, such as more carefully matching the size and type of disposal facility to the site-specific quantity of agent and/or munitions to be destroyed.

Stockpile Disposal Program

Current Army policy calls for retaining those chemical weapons that are still usable; i.e., neither obsolete nor unserviceable. But the Army also recognizes that budget and schedule information are necessary for planning for their eventual disposal.

USATHAMA plans, by 1985, to recommend a procedure for disposal of the stockpile. This would incorporate experience derived from the

CAMDS, JACADS, and the expedited M55 rocket/M23 land mine projects as well as the results of the RDT&E program and a number of additional studies (including this one). These studies are to consider the technological and political feasibility of transporting stockpiled munitions to regional facilities and provide cost-benefit analyses of competing alternatives.

Currently, two options developed during the original long-range concept study are of interest to Army planners. Option I calls for consolidation of the stockpile items at the Tooele Army Depot in the West and Anniston Army Depot (ANAD) in the East. Option II involves developing facilities at each existing storage site. Between these extremes, there is a broad range of other alternatives, all involving some amount of transportation.

In summary, the four main components of the Army's current chemical weapons disposal program are:

1. Continue safe storage of munitions and agents;
2. Use DATS to clean and store leakers;
3. Proceed with disposal of BZ, M55 rockets, and unserviceable stocks on Johnston Atoll; and
4. Conduct experiments and analyze alternative methods for disposing of the remaining stocks.

The Army's decisions have been and will continue to be strongly influenced by the requirements and constraints under which it operates. These are discussed in the next chapters.

Part II
Report of the Stockpile Assessment Panel

3

Storage of Toxic Chemical Munitions

The U.S. stockpile of chemical agents and munitions consists of M55 rockets (containing GB or VX), M23 mines (VX), 105-mm, 155-mm, 4.2-inch, and 8-inch projectiles (GB, VX, or HD), MC-1 MK94 bombs (GB), and 1-ton containers (GB, VX, HD).

None of these agents or munitions have been manufactured since 1968. All are at least 16 years old and some are 40 years or older. Mustard was made during World War II and in 1954-1955, while BZ munitions were manufactured at Pine Bluff, Arkansas, in 1963-1964, remaining there in storage. The latter consists of about 5 tons as bulk agent and 40 tons blended with pyrotechnic as cluster bombs, plus another 600 tons of contaminated residue.

The chemical munitions are stored at eight Army depots in the continental United States: Lexington, Kentucky; Newport, Indiana; Tooele, Utah; Aberdeen, Maryland; Umatilla, Oregon; Anniston, Alabama; Pine Bluff, Arkansas; and Pueblo, Colorado. Members of the Stockpile Assessment Panel visited the eight storage sites in the continental United States between October 1983 and March 1984. A report presenting an overview of each site is presented in Appendix B. To assist the panel in discussions at the sites, a questionnaire was developed and sent to each facility for response prior to the visit (Appendix C). A typical site response is included as Appendix D.

These facilities vary considerably in the quantity and type of munitions stored. The chemical weapons constitute a relatively small component of the facility's total activities and budget at most of the depots. The facilities also vary considerably in the surrounding civilian population density, climatic conditions, proximity to large metropolitan areas, and the frequency of surrounding ground and air traffic.

With the exception of Newport, where VX is kept in 1-ton containers in a building, the storage method is similar. The nerve agents, either as munitions or in 1-ton bulk containers, and the mustard

munitions are stored in steel-reinforced concrete igloos (Figures 6 and 7),* while the bulk mustard is usually stored in 1-ton containers out in the open.

Within the past two years there have been no accidents and only three minor incidents in handling chemical agents and munitions. Two of these occurred at Lexington-Blue Grass during the Drill and Transfer System (DATS) process. One involved a minor spill during laboratory procedures and the other resulted from a defective glove worn by a DATS operator.

The third incident involved a small mustard burn on the thumb of an operator when a leaking munition at Pueblo was being transferred to a container in 1983. None of these cases involved any release of agent to the outside atmosphere. Further, the fact that no serious incidents or accidents have occurred attests to the adequacy of the storage arrangement.

The stockpile has remained relatively static except for movements within the exclusion area for surveillance, maintenance, and storage purposes. In addition, laboratory samples of 1 liter or less may be sent from one facility (usually from Edgewood Arsenal at Aberdeen) to another for testing purposes.

The Army has a very good record in managing the stockpile of chemical munitions and agents. It has preserved the toxic chemical munitions within the limitations imposed by the location of the stockpiles and the subsequent statutes and Department of Defense (DOD) regulations. Further, the various storage sites seem to conform with relevant Army regulations and procedures.

For the future, however, several reservations can be raised:

- Only a small fraction of the inventory of chemical agent is in munitions that are serviceable and ready for use. At least 18 months will be required before significant additional quantities of agent could be put into useable munitions. Based on information obtained from the Army and other sources, the panel believes that this equals or exceeds the time that would be required to manufacture new chemical agents and munitions.
- Despite plans to develop more data on the long-term stability of chemical agents, it is unlikely that this information will be produced in a timely fashion.
- The condition of the munitions from an ordnance standpoint is uncertain because no test firings have been conducted since 1969. Test firings would provide more useful information on the service condition of the stockpile than all of the other nondestructive, chemical tests combined. Such test firings have been restricted by law since 1969. Test firings will require a complex approval process involving the secretaries of Defense and Health and Human Services, the President, and a special report to Congress.

*An igloo is a dirt-covered, reinforced concrete bunker approximately 90' long x 25' wide x 15' high used to store toxic or conventional munitions.

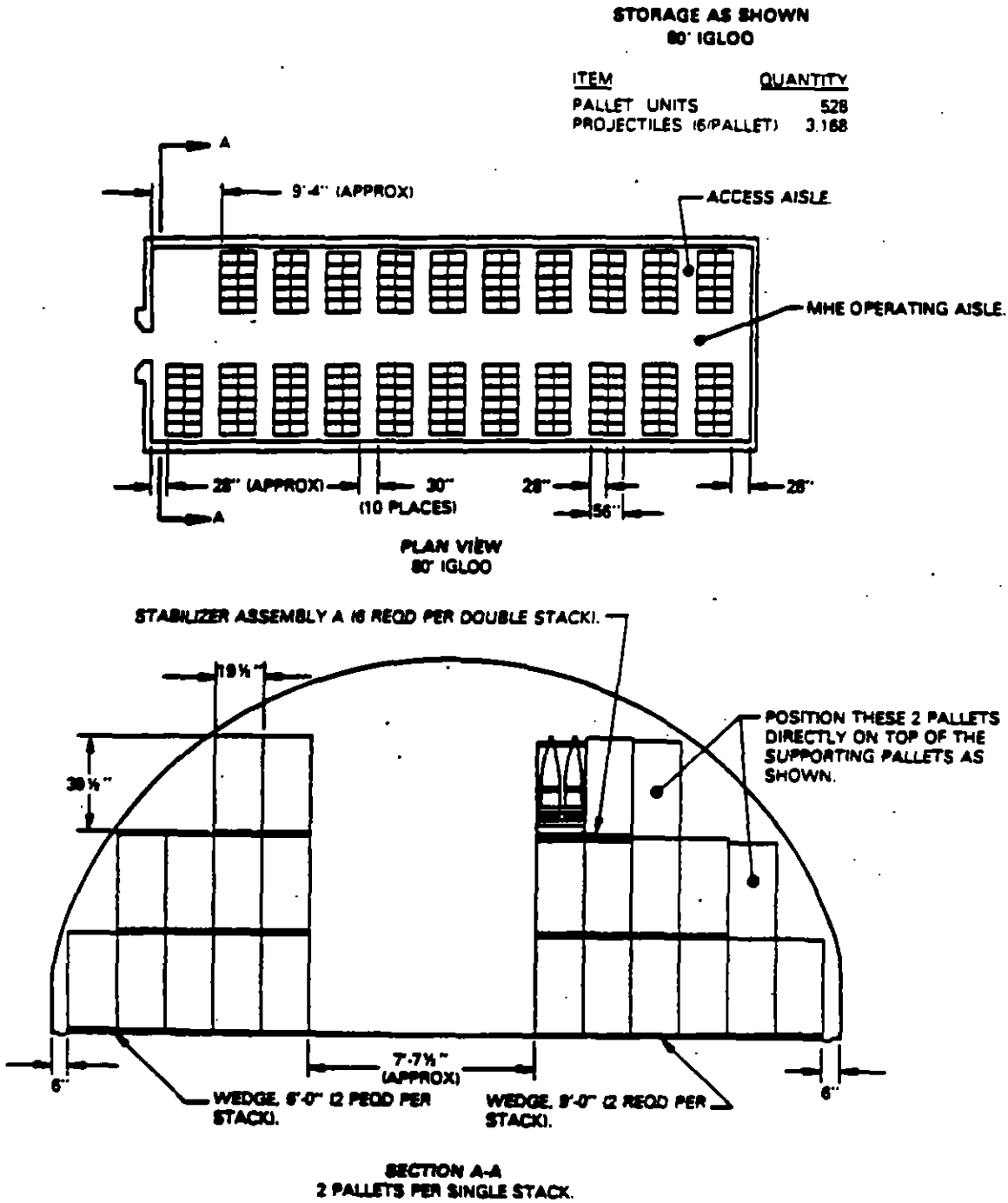

FIGURE 6 Igloo storage plan.
Source: USATHAMA.

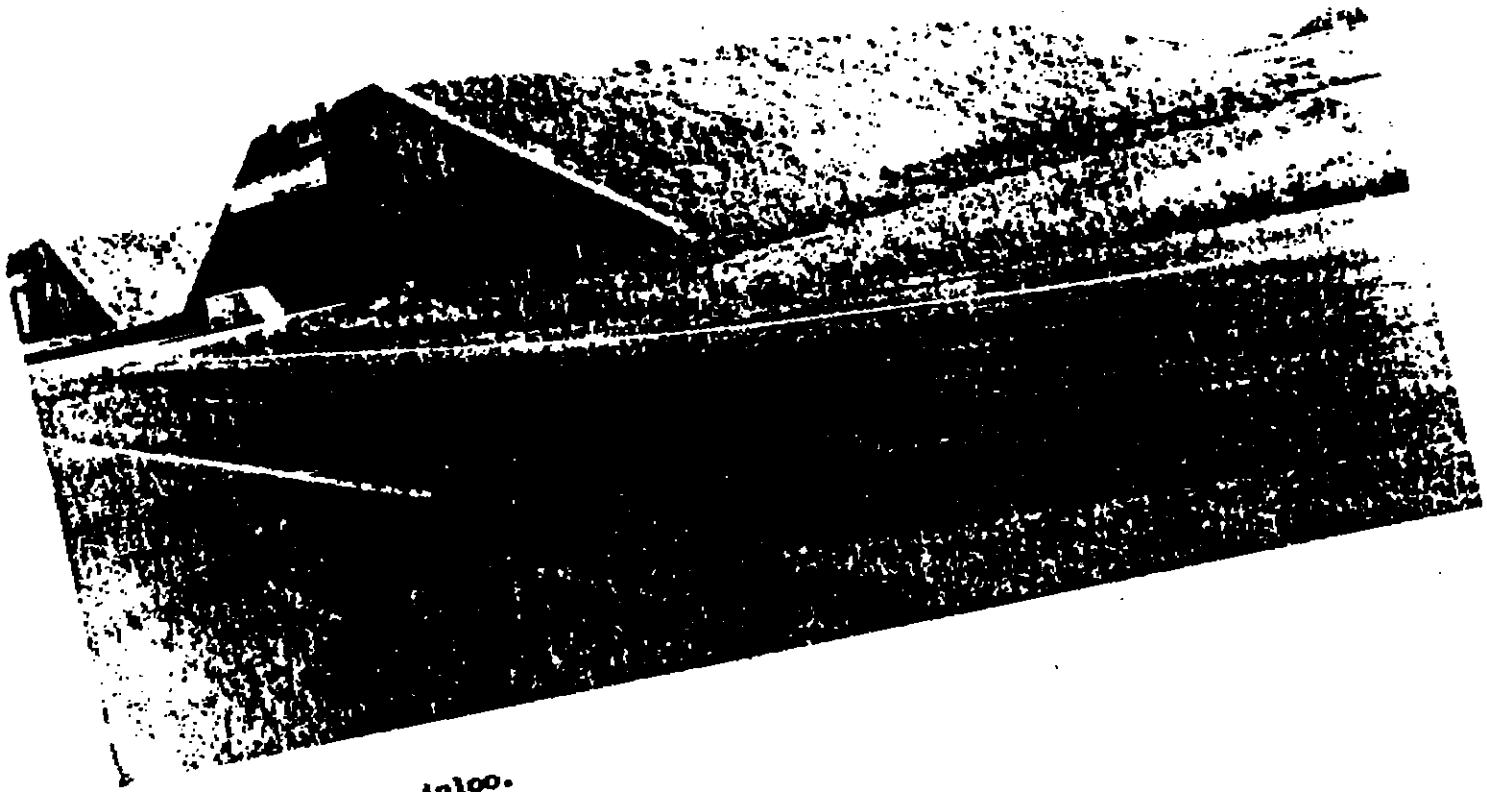

FIGURE 7 Storage igloo.
Source: USATHAMA.

MONITORING

The Army has set monitoring requirements for toxic chemical munitions in DARCOM-R 385-31, 385-102, and SB 742-1. Nevertheless, there is considerable diversity in monitoring practices and equipment at the eight depots. Until recently, rabbits were still used instead of instruments at some depots to determine whether igloos had dangerous concentrations of a chemical agent. Bubblers are now used routinely to sample the ambient levels in igloos that are opened, and vents may be tested prior to opening igloos.

Each igloo's exhaust vent should be continuously monitored. Ideally, such monitoring would be connected to the remote electric monitoring already being used for security purposes. However, at the present time, the U.S. Army does not have any sensors capable of providing remote read-outs from point sensors. Microsensors with selective absorbent coatings have the greatest potential for such application, but will not be available for several years (NRC, 1984).

The use of mass spectrometers for identification of chemical agents could be used to determine whether igloos have dangerous concentrations of chemical agent. However, it would be necessary to modify the igloos in order to probe for chemical agent concentrations. In its current state, mass spectrometry would cost about $100,000 to $300,000 per equipment set. A record of emissions from each site should be maintained and be available to the public.

INSPECTION

Monitoring and inspection occur at all storage sites at prescribed intervals in accordance with SB 742-1 (DARCOM, 1977). The method of visual surveillance depends somewhat on the munition. For example, examination of M23 land mines requires removing the munition from its metal container to look for any evidence of leakage, rust, or other signs of deterioration. M55 rockets are examined by drawing a sample of air through openings in the rear and nose cone, and passing it through a detector tube filled with solution. BZ containers are packed in wooden crates, which can be visually examined for leakage and container deterioration. Mustard containers are examined superficially for rust and leakage.

All chemical munitions and agents are inspected on a cyclical basis throughout the year using lot-sampling criteria prescribed by SB 742-1. Each lot is inspected at least once a year; if a leaker is discovered, however, the entire lot is inspected.

In addition to a visual inspection, SB 7421-1 provides for a vapor test and chemical analysis of the agent. However, since these surveillance procedures provide only qualitative information about agent deterioration, the Army initiated the Surveillance Program, Lethal Chemical Agents and Munitons (SUPLECAM).

SUPLECAM uses a mobile chemical laboratory, which is operated by the Pine Bluff Arsenal. The procedure requires that toxic munitions be drilled and the agent be removed and analyzed to determine its characteristics. In addition, the explosive components are tested and the condition of the metal container is assessed. Recently, SUPLECAM II was instituted to provide more data, such as stabilizer percentage, acidity levels, metal content, and purity of the chemical agent, all of which can help predict the useable life of the chemical agent.

Treatment of Leaking Munitions

Over the years, leakers have been overpacked by sealing them in metal containers, which are then stored in specially designated igloos. Starting in 1981, the U.S. Army Toxic and Hazardous Material Agency (USATHAMA) instituted DATS to dispose of all leaking munitions that were designated Code H (unserviceable, unrepairable, or obsolete). This project consists of a transportable chemical laboratory, which is staffed and operated by Pine Bluff Arsenal and which travels to the other depots.

The DATS operation does not destroy the agent or munition; it merely separates the two, which then must be disposed of by other means. A hole is drilled into the munition, and the agent is drained and transferred to a bulk container. The casing is decontaminated and the explosives are destroyed by detonation. The drilling operation is carried out in a glove box. The entire operation appears to have been designed to minimize potential for hazard.

Metallurgical Aspects

With the exception of the M55 rockets, there are few leaks from the bombs, artillery projectiles, spray tanks, mines, and bulk storage tanks in the stockpile. Analysis for metallurgical failure, which has been performed on leakers, has been limited in the past to Navy Wet-Eye Bombs, 105-mm projectiles and, most recently, 155-mm projectiles. The projectile studies have taken place under the auspices of the metallurgical testing program at the Army Materials and Mechanics Research Center in Watertown, Massachusetts. These failures appear to be well understood, are often associated with fabrication defects (poor welds, braised joints, etc.), and the munitions in question have generally been removed from the inventory.

In broader terms, however, the question remains as to whether there is any urgency involved in the disposal of chemical munitions. Several points are important.

- There are not enough data to project the near- or long-term storage life of chemical agent containers. As mentioned above, the metallurgical testing has to date examined 105-mm and 155-mm leakers. There appears, for example, to be no basis for

predicting the lifetime of M55 rockets or whether the incidence of failures might increase in the future.

- Corrosion appears to be a function of a chemical agent's rate of deterioration. Deterioration leads to changes in agent acidity, and purity. Hence, the presence of stabilizers or inhibitors to neutralize acid products and to prevent hydrolysis is essential. With regard to corrosivity, agents should be sampled periodically to determine their acidity, purity level (including dissolved gases such as oxygen), and ionic conductivity. SUPLECAM II appears designed to provide much of those data. SUPLECAM II should be modified, where necessary, to analyze all factors important to determine agent corrosion as a function of age.
- All munitions and containers subject to SUPLECAM II should be examined metallurgically as well through the stockpile test program in order to evaluate whether corrosion of the metal containers might have occurred. While some such investigations are ongoing, a systematic and coordinated study might allow the generation of kinetic models that could serve as the basis for reliable lifetime projections.

In terms of the container's metallurgy, there is surface corrosion on 1-ton containers that are stored outdoors, but it appears to be largely cosmetic and can be readily corrected. However, no information appears to be available on the condition of the inside surface, which is exposed to bulk agent. Moreover, it appears that brass plugs and valves had been installed on some of the otherwise carbon steel containers. Some of these have apparently deteriorated, because of galvanic corrosion, to the point where systematic replacement of the valves has had to occur. In addition, there are reports of leaks at the point where the sidewalls of the container are welded to the end caps, probably because of internal crevices. These problems may prove to be more difficult to manage.

4

Risk Analysis for Toxic Chemical Munitions

What is the magnitude of the risk to public health posed by toxic chemical munitions? The panel addressed this crucial question by first reviewing the risk calculations made by the Army and then developing its own qualitative analysis of the risk posed by toxic chemical munitions. The Army has calculated air concentrations and consequent human health impacts that might result from certain types of accidents, and the panel has found these calculations to be useful and appropriate as a first step in assessing the risk to public health and to the workforce at the storage sites. However, more comprehensive analysis is needed, including a broader range of situations where large quantities of toxic agents could be released into the environment and by using more accurate models for predicting air concentrations.

REVIEW OF ARMY RISK CALCULATIONS

The Army has a set of standard procedures for computing the area in which adverse health impacts are likely to occur following an accidental release of a toxic agent. The main calculation is the distance downwind at which 1 percent lethality will occur in an unprotected population. The basic reference for this calculation is the methodology for chemical hazard prediction (Department of Defense Explosives Safety Board, 1980).

The approach assumes the release of a given quantity of agent from an incident or accident. The maximum credible event is used as a worst-case release for planning purposes. Identification of the maximum credible event is done at each military base as part of that facility's planning process.

A standard type of Gaussian diffusion model is used to calculate air concentration of agent vapor as a function of distance downwind. The calculation depends on the atmospheric stability class

and wind speed. Temperature is important in determining the amount of agent evaporated from a spill. The Gaussian model is a relatively simple and standard approach, which is widely used in computing the dispersion of atmospheric pollutants. Its use is appropriate for distances up to several kilometers where complex terrain effects are not significant.

Table 5 gives the concentration in mg-min/m^3 of agent corresponding to 1 percent lethality for nerve agents and a maximum level for no permanent skin injury for mustard agents (Department of Defense Explosives Safety Board, 1980). The toxicity values of the nerve agent are based on an adult breathing rate of 25 liters per minute, which corresponds to a moderate level of physical activity. The 1 percent lethality concentrations for children will be about one-third less than the values given in Table 5. Correction methods are suggested for small doses of GB and VX over extended time intervals and for percutaneous exposure to VX, which depends on the amount of clothing worn by the person exposed.

For explosive dissemination of mustard and VX, a different method is used to calculate the 1 percent lethality distance, since data are lacking on vapor and aerosol concentration of agent for the Gaussian model (Department of Defense Explosives Safety Board, 1980). Therefore, an empirical method, which is based on analysis of test data from Dugway Proving Ground, is used (Irving et al., 1970).

Depending on the atmospheric stability class (A-F), the 1 percent lethality distance for a ton of explosively disseminated VX is calculated to be from 4 to about 40 miles. Even 100 pounds of explosively disseminated VX could result in a 1 percent lethality under stability class F up to 10 miles downwind.

A handbook (U.S. Army, 1980) is available that calculates 1 percent lethality distances. It provides a guide to the input parameters needed and gives illustrative examples of the calculations. Field handbooks further describe how the calculations may be made on a TI-59 programmable calculator (Whitacre and Kneas, 1980), an Apple microcomputer (Whitacre, 1981), or as a FORTRAN program (Whitacre and Myirski, 1983). The 1 percent lethality calculations are usually made now on the TI-59 calculator.

As an example of a calculation, the panel asked the personnel at Umatilla to calculate the 1 percent lethality distance for a large spill of GB resulting from rupture of a 750-pound bomb. The assumptions for the calculation were as follows: 70°F temperature, 3 meters/second wind speed, stability class F, 25 percent of the agent in the bomb spilled, and 30 minutes elapsed until the spill was covered. (Umatilla personnel noted that a plastic sheet is kept in readiness when such munitions are handled and that 10 minutes is more realistic as the time needed to cover the spill.) The resulting 1 percent lethality distance was computed to be 200 meters.

TABLE 5 Toxicity Values (mg-min/m^3)

CHEMICAL AGENT	1% INCAPACITATION	1% LETHALITIES
BZ	31	N/A
GB	N/A	10
H, HD	N/A	150[a]
HT	N/A	75[a]
VX (Inhalation)	N/A	4.3

[a] Level corresponding to maximum exposure with no permanent skin injury rather than 1 percent lethality.

Thus, the 1 percent lethality distances are on the order of a kilometer or less, unless a large quantity of agent is explosively disseminated. How credible are such situations? The information from munitions testing by the Army is summarized in the Army's Handbook for Chemical Hazard Prediction (U.S. Army, 1980), which states that:

> In most planned munitions handling operations, it is not considered credible that explosion of more than one munition would occur in a single accident. Tests of several chemical munitions have shown that sympathetic detonation of the explosives does not occur in normal storage configurations for most items. The two exceptions are the M55 rocket and the M23 land mine.

The explosion of one land mine in a three-mine container might detonate the other two mines, but sympathetic detonation in other containers does not occur. For the M55 rocket, however, a series of sympathetic detonations could spread through the rockets stored in an igloo. Tests were conducted at the Black Hills Army Depot in South Dakota and at Dugway Proving Ground, in which such propagation occurred.

While 97 percent of the agent in the exploding munitions was destroyed by the high temperature in the resulting fire, an estimated 570 pounds of GB was released (Irving et al., 1970). For VX-filled M55 rockets, an estimated 37 pounds of agent was released. Most of the agent was released in the first 15 to 20 minutes following the initial explosion, although the munitions in the igloo continued to burn and explode for several hours.

The Army uses the explosion of an igloo containing GB-filled M55 rockets as the basis for the maximum credible event at five of the eight sites (Lloyd, 1984). The results of the Army's calculations are summarized in Table 6. For the five sites in which the maximum credible event is based on the M55 rocket explosion, the 1 percent lethality distance was computed to be up to 7-8 km (4.5 to 5.2 miles) under daytime conditions and up to 27 miles (43 km) at night, when the height of the mixing layer is much lower. The 1 percent lethality distance for the other three sites is less than a kilometer for Edgewood (where few if any agent-filled munitions are stored) and less than 100 meters for Newport and Pueblo.

There are considerable uncertainties in these calculations that are not apparent in the Army's summary (Lloyd, 1984). First, the estimated release, 2.52 percent of the GB contained in an igloo filled with M55 rockets, is based on a small amount of field test data. Under slightly altered conditions, much less of the agent might be destroyed by the high heat in the igloo, so the release would be much larger than the 2.52 percent that the Army has assumed (Lloyd, 1984). A wide variety of circumstances could influence the amounts and emission rates of GB and VX from fires in igloos containing M55 rockets (Irving et al., 1970, p. 79).

Second, the Gaussian dispersion model used by the Army cannot assess concentrations more than a few kilometers from where the release took place, especially where mountains, water, or other terrain features affect wind patterns. The Army's calculation should be taken as an order-of-magnitude estimate only for the 1 percent lethality distance for large explosive releases. A more detailed model, including terrain effects, could give a significantly improved prediction of the air concentrations 5 to 30 miles downwind that could result from the explosion of an igloo containing GB-filled M55 rockets.

TABLE 6 One Percent Lethality Distances Calculated by the Army for Maximum Credible Events at the Eight U.S. TCM Storage Locations (Lloyd, 1984)

MCE	DAYTIME CONDITIONS	NIGHTTIME CONDITIONS
GB-filled M55 rocket explosion (2,000 rockets in igloo, 2.52% of agent released)		
Anniston	7.3 km (4.5 miles)	43.2 km (26.8 miles)
Lexington Blue Grass Army Depot	7.3 km (4.5 miles)	36.3 km (22.5 miles)
Pine Bluff Arsenal	7.3 km (4.5 miles)	43.2 km (27 miles)
Tooele Army Depot	7.8 km (4.8 miles)	43.2 km (27 miles)
Umatilla Army Depot Activity	8.3 km (5.2 miles)	43.2 km (27 miles)
Other MCEs		
Edgewood: detonation of 155 mm GB round	0.945 km = 3,100 feet	
Newport: rupture of 1-ton container of VX	less than 25 meters = 80 feet	
Pueblo: detonation of 155 mm HD round	80 meters = 262 feet	

The Lawrence Livermore National Laboratory in Livermore, California, has developed the Atmospheric Release Advisory Capability (ARAC) system (Dickerson et al., 1983) for the Department of Energy (DOE) and the Defense Nuclear Agency (DNA). It calculates the air concentration and ground contamination from airborne releases of radioactive materials. ARAC uses both a simple Gaussian model for rapid calculations and a detailed, three-dimensional numerical flow model. The latter requires up to 45 minutes of computer time, but this model provides site specific calculations that include the effects of complex terrain and available meterological data from the site.

The Lawrence Livermore National Laboratory has made an extensive investment in both models and in the capability to communicate rapidly to the affected site. ARAC is being extended to provide emergency response planning capability to 45 DOD sites. The adoption of ARAC would appear to be an excellent way for the Army to upgrade its capability to analyze the potential consequences for large-scale releases, such as an M55 rocket explosion in an igloo.

Third, other credible release scenarios have apparently not been evaluated. Airplane crashes, earthquakes, lightning strikes, forest fires, and acts of terrorism or sabotage could cause munitions or agent containers to rupture or explode. This could result in 1 percent lethality distances comparable to those for the explosion of an igloo of M55 rockets. Even if the probability for such events to initiate a large-scale release is extremely small, the consequences for public health are potentially very great. A risk assessment should be carried out as soon as possible for a full range of natural disasters and terrorist acts that could initiate a large release of agent and threaten public health in the vicinity of the eight Army storage depots.

QUALITATIVE ANALYSIS OF RISK

In assessing risk from storing chemical munitions, it is useful to distinguish several different kinds of events that could initiate an accident or incident threatening public health: storage, routine operations, and extraordinary situations such as a terrorist attack or an airplane crash.

The first concern is leaking munitions or agent containers. Are such leaks becoming more frequent because of corrosion or deterioration as the munitions and containers age, and do such leaks threaten significant adverse consequences to public health?

While there is still considerable uncertainty about deterioration over time, the available information indicates that the frequency of leaks for most munitions has not substantially increased in recent years. Further, most leaks have been small and increasingly sensitive detection methods may be responsible for some of the recently

identified leakers. The small number of munitions that do leak are stored in airtight cannisters until they can be disposed of.

The exception is the M55 rocket. A large number of M55s have been found to leak in recent years. Even for these munitions, however, the appearance of leakers in storage appears to have a low probability of affecting public health. The leaking munitions can be detected, put into containers as an interim measure, and ultimately disposed of.

The second class of events of concern is that of incidents or accidents occurring during routine operations such as inspection, moving munitions or agent containers on site, uploading/downloading, and disposal. The Army generally carries out such operations with extreme care; incidents and accidents involving even very small releases of agent have been rare. However, there have been several instances in which Army safety practices could be improved. In the case where a single munition detonates or a container is ruptured, the area in which serious adverse impacts on health could occur is confined to the base, and personnel with gas masks and protective clothing are prepared to undertake a rapid decontamination and clean-up operation.

Again, there are exceptions. First, as described above, an explosion of one M55 rocket in an igloo could trigger a large release that could jeopardize public health in locations 5 to 30 miles downwind. Handling of M55 rockets should be carried out with extreme care, especially in igloos or other confined spaces where detonation of one rocket could cause the explosion of others nearby.

The third class of events is where an agent might be disseminated as a result of an explosion caused by a large and sophisticated terrorist group, a natural disaster such as an earthquake, tornado, forest fire, or an airplane crash directly on a storage site. The panel has no information indicating that the Army has carried out a risk analysis for such events, but it seems clear from their hazard calculation methodology that such events could cause large numbers of fatalities in populated areas up to tens of miles downwind from the storage location.

The Army should assess carefully the probability and potential consequences of a comprehensive set of such extreme release scenarios. The Army should also evaluate measures to reduce the probability of the initiating event, the quantity of agent released, and the magnitude of the consequences. Measures to be evaluated should include increased security protection, restriction of air traffic over chemical storage locations, removal of bulk agent from above-ground storage into earth-covered igloos, acceleration of disposal programs, and increased planning for emergency evacuation of nearby communities.

5

Army Operations With Respect to Toxic Chemical Munitions

Basically, the Army seeks to maintain a reliable, deterrent stockpile of toxic chemical munitions in a safe and secure manner. Although there are numerous Army units involved with chemical munitions and agents, this report deals only with those for whom toxic weapons are a major part of their mission. The Army's organization for this effort is complex, but their operations appear to have been successful. Those involved in research, development, and logistics appear to be responsible and follow existing directives.

Nevertheless, improvements can be made and concerns as to efficiencies do and will continue to exist. The Army's greatest problem, in fact, may be taking past successes for granted. But the Army's mission of maintaining the stockpile is generally being achieved.

The United States Army Materiel Development and Readiness Command (DARCOM) is responsible for managing the toxic weapons stockpile. This includes testing, surveillance, supply, maintenance, and disposal. DARCOM's Chemical and Nuclear Office, an organization of seven people, coordinates the management of chemical weapons with other DARCOM and Army offices. The three field operating agencies guide and direct DARCOM's subordinate commands involved in managing toxic materials. The U.S. Army Toxic and Hazardous Materials Agency (USATHAMA) is responsible for all aspects of the disposal program, including chemical surety matters. The DARCOM Field Safety Activity provides services, training, and evaluation of safety matters. And the Surety Field Office ensures compliance with the chemical surety program requirements through inspections.

All are effective organizations. However, the DARCOM Chemical and Nuclear Office appears to be inadequately staffed to maintain cognizance of field operations as well as provide advice on chemical munitions matters to the DARCOM commander and staff. Given that management operations are decentralized to the major subordinate commands, the sensitivity and critical nature of chemical munitions operations should have greater visibility at headquarters.

DARCOM has two major subordinate command organizations that are directly involved in chemical weapons: the Armament, Munitions and Chemical Command (AMCCOM) and the Depot Systems Command (DESCOM). AMCCOM, which is responsible for the overall management of toxic chemical munitions, provides guidance to the DESCOM depots (Anniston, Lexington-Bluegrass, Pueblo, Tooele, and Umatilla) for their supply, maintenance, and surveillance activities. This same attention was provided to Pine Bluff Arsenal, the Chemical R&D Center at Edgewood, and Newport. Communication and coordination between these two organizations and their subordinate commands appeared to be good. Although time to visit the eight sites was limited, few problems surfaced to challenge the responsiveness and competency of these organizations to conduct operations.

However, the panel is concerned that reductions in available resources could impair the effectiveness of AMCCOM management efforts and the coordination of Army organizations with responsibilities for toxic chemical munitions. The organizational structure available for chemical munitions operations at the eight depots appears to be adequate for accidents involving small quantities of agent, with some elasticity for implementation of the Chemical Accident/Incident Control plan (CAIC). Obviously a massive exercise could test the adequacy of the existing organizational structure in command-control, security, medical, etc. The impact of an event resulting from such a threat should be evaluated as soon as possible.

Although there were similarities in chemical surety operations and organizations at the eight depots, each depot also had unique aspects. There could be greater standardization, since the depth of responsiveness to requirements varied. For example, all security organizations conducted threat training, but not all had taken the initiative to have professional instruction provided by the Military Police School at Fort Gordon, Georgia. In another example, the medical personnel had varying amounts of training, for which the timeliness varied. This does not indicate that AMCCOM, DESCOM, and other Army elements are not carrying out their mission, but rather that their staffing could be improved and that standardization could increase operational effectiveness.

Some panel members felt that an evaluation should be made to determine if the organizational staffing in the area of command and control is adequate at Anniston and Tooele depots for CAIC operations. Both commands are responsible for their own large management activities and also for their subordinate installations. The parent organizations may not have adequate manning to guide their subordinate activities.

Two operational programs further indicate that the current organizational structure is adequate to manage the toxic chemical munitions stockpile. First, the Drill and Transfer System (DATS) has already successfully been carried out at five chemical munition installations and will operate for several more years. Importantly,

DATS has involved cooperation and positive actions between several major subordinate commands as well as DARCOM headquarters.

The Surveillance Program, Lethal Chemical Agents and Munitions (SUPLECAM), is the other successful operation. Fifty lots were sampled in the first cycle and a second cycle is under way--all without incident. Although the DARCOM organizations competently supported this program, some question exists as to the necessity of training teams on SUPLECAM operations at each site. Safety and effectiveness might be improved if a single team were moved from depot to depot, avoiding the need to train multiple teams for different installations.

In summary, DARCOM appears to be organized adequately to successfully manage toxic chemical munitions operations. The panel believes that these command and control plus operational organizations should perform satisfactorily in the future. It bears repeating, however, that to assure more effective management for DARCOM, the personnel of the Chemical and Nuclear Office at DARCOM headquarters should be strengthened. Also, the current organizations for CAIC operations should be tested with realistic exercises involving terrorist operations, preferably using Army personnel outside DARCOM experienced in such tactics.

6

Medical Aspects

MEDICAL SUPPORT OF THE CHEMICAL MISSION

Most depots have a medical unit that is responsible for general health care. Their responsibility is for employees and their dependents, armed forces personnel, some retirees , and, in some cases, those in the area eligible for veterans' benefits. In general, the involvement of medical personnel in the chemical mission of the depot seems to be regarded as a secondary aspect of their responsibilities. In part, this is because of the organizational structure in which the medical officer reports to the medical command at another site, often a regional Army hospital where the problems associated with chemical agents do not necessarily have high visibility.

The secondary nature of the chemical mission is manifested in various ways. For example, many medical officers apparently lack specific previous training in dealing with toxic chemicals. This is subsequently provided, but on an inconsistent schedule. In addition, there is no overlap of medical personnel; incoming physicians and nurses do not learn from those whom they are replacing.

Moreover, there seems to be an inadequate body of reference material or guides regarding the medical aspects of chemical agents. In at least one case, a physician responded by personally amassing what was reported to be a comprehensive array of material that would be of general use to physicians with similar responsibilities.

It is not altogether clear that the medical personnel are well integrated into the Chemical Accident/Incident Control (CAIC) procedures at all depots, particularly in this capacity as liaison with civilian medical services outside the depot that would be involved in dealing with an accident or incident of any scale. At some depots, planning for such events has been handled well, but this is probably more due to the concerns and interests of the particular officers involved than to a broadly implemented policy. Liaison with hospitals, clinics, and physicians in the community is important because on-base medical facilities and equipment, although adequate for routine activities, may not be sufficient in case of either a serious accident or incident.

Some depots may depend on community resources to an even greater degree since, in addition to the inexperience or lack of training of the medical officer, the support personnel assigned to the medical contingent appear to lack the background, experience, and special training needed to treat victims exposed to chemical agents.

MEDICAL RESPONSIBILITIES RELATED TO PERSONNEL STATUS

Medical personnel at the depots are involved in various aspects of the physical and mental health of employees and armed forces personnel. This role extends beyond those working with chemical munitions. Myriad Army regulations hamper efforts to deal medically with mental instability, drug or alcohol abuse, or poor physical condition. Still, there appears to be scope for a more uniform and aggressive policy to deal with these problems among employees assigned to chemical security and surety.

For example, the ability to function effectively in class A protective gear in the heat of the summer is very limited at most depots. Circumstances can arise in which employees in poor physical condition would be unable to cope adequately with a chemical accident or incident and would be placed at high personal risk while doing so. Age must also be considered a factor in this context; a workforce with balanced physical abilities would seem necessary at the potential expense of strict seniority rules.

Similar problems arise with regard to substance abuse or mental instability as they relate to accident or incident response, or simply to access to chemical munitions. Although there is a program for screening and monitoring personnel involved in chemical security and surety, a more effective collaboration is needed between the medical officer, the personnel department, and the command to ensure prompt reassignment of problem employees.

In general, most of the problems outlined above are amenable to straightforward solution. Priority should be given, for example, to the selection of properly qualified medical personnel who are then properly trained in dealing with the consequences of working with toxic chemicals prior to their assignment to the depots. Moreover, it seems sensible to overlap the tours of duty of medical officers and their replacements to ensure an acceptable level of CAIC readiness. Each medical contingent should have adequate reference material to consult on how to treat chemical injuries. If these are not currently available, they should be prepared and disseminated promptly.

It is somewhat more difficult to raise the priority of the chemical mission among the Army medical community generally because it is a readiness issue rather than one of day-to-day involvement. Perhaps this could be done by involving medical personnel in periodic conferences with the depot commander and the security and surety personnel to air problems of mutual concern as well as to expose the latter to the broader aspects of the depot's chemical mission. An

early subject of such meetings might be the establishment of an ongoing relationship between depot medical personnel and their counterparts in the civilian community. This would help develop integrated CAIC plans for those depots that do not currently have them.

7

Security

Security at the eight chemical munition storage depots is governed by Army Regulation AR 50-6, Supplement 1 to AR 50-6, and other site-specific supplements. These regulations attempt to ensure security of the stockpile and to minimize the risk of a security breach from civilian employees.

The depots all have adequate basic security, but it could be improved. Some exclusion areas have second gates with substantially less security than at the main gate. Basic security seems adequate for conventional threats, and the depots seem to be improving their defenses.

However, the security procedures are clearly not adequate to stop a large and sophisticated armed force. Breaching a facility's security perimeter does not, fortunately, give access to the igloos, nor is it easy to do anything serious to the munitions (except perhaps the M55 rockets) even if access is obtained. Still, the munitions, particularly those located at facilities close to populated areas, will continue to be a potential target. To obtain the level of security necessary to prevent intrusions would require substantial increases in effort and costs.

Security also involves a personnel reliability program that is part of chemical surety. Most of the facilities are run by civilians with minimal military presence (though the ratio of military to civilian personnel varies considerably by site). The isolation of the facilities and the importance of these storage areas to the local economy has produced a loyal workforce with a low turnover rate. These desirable conditions lead to at least the suspicion that informal structures and networks may be more influential than the formal organizational structure on which the chemical surety program is founded.

It is possible, for example, to imagine circumstances in which workers might cover up for each other. Given that, it is certainly not possible to rule out an internal security threat.

Finally, it is questionable whether the depots possess the emergency capability to respond to an accident that releases large amounts of agent. Emergency plans appear to be designed to handle a relatively modest, industrial-sized accident. An aircraft crash into an igloo, an explosion in a bulk storage area, or the ignition of an igloo of rockets could all create havoc. Emergencies either in very hot weather (when protective clothing can only be used for a limited time) or at night could require more trained personnel than would be available.

The security of these facilities has been adequate by the standards of the 1970s. One can not be sanguine that this level of security will continue to be adequate in the 1988s and 1990s. The limited emergency capability of the smaller storage depots in particular, makes them appropriate targets for either consolidation with munitions at larger depots (particularly Tooele) or for disposal efforts.

8

Legal Aspects of Toxic Chemical Munitions

Only two federal laws specifically govern the storage of toxic chemical munitions: the Armed Forces Appropriation Acts of 1969 (PL 91-121) and of 1970 (PL 91-441). In 1978, however, President Jimmy Carter signed Executive Order 12088 requiring all federal agencies, including the Army, to comply with all U.S. environmental laws.

The appropriations acts of 1969 and 1970 require that the Department of Health and Human Services review any proposed movement, outside of an Army base, of toxic chemicals or munitions of more than one liter and recommend measures to protect public health and safety. Congress and the governor of the state must be notified 30 days before the action may be implemented. In addition, the Department of Defense Explosives Safety Board (DDESB) must review the project before it can be approved by the Department of Defense.

Since storing an aging collection of munitions in guarded facilities with no intention to release them to the environment is essentially a passive function, the legal problems are minimal. There appear to be no state or local laws applicable to storage. During inspection, maintenance, and other routine operations involving handling of the stockpile, however, legal requirements will apply. But meeting these requirements should cause little difficulty.

The relevant laws include the National Environmental Policy Act, the Clean Air Act, the Clean Water Act, the Comprehensive Environmental Response, Compensation, and Liability Act, the Toxic Substances Act, the Occupational Safety and Health Act; and the Hazardous Materials Transportation Act (see Appendix E).

The National Environmental Policy Act (PL-190) of 1969 (NEPA) requires environmental impact statements for all major actions that could significantly affect the environment. NEPA also created the Council on Environmental Quality (CEQ), which issues regulations for the implementation of the statute. Under the authority of these regulations, since 1978, the Environmental Protection Agency (EPA) has primary responsibility for the review of environmental impact statements.

The Clean Air Act (PL 95-95) of 1977 authorizes EPA to set air quality standards and to review state plans to implement them. Similarly, the Clean Water Act (PL 95-217) of 1977 requires EPA to set criteria for the discharge of pollutants into the nation's waterways.

The Safe Drinking Water Act (PL 95-523) of 1974 authorizes EPA to set standards for drinking water, but allocates primary enforcement responsibility to the states, with EPA taking an advisory role in enforcement.

The Resource Conservation and Recovery Act (PL 94-580) of 1976 establishes guidelines for solid and hazardous waste management. The standards apply to the generation, storage, transportation, and disposal of any hazardous material. Under the law, EPA regulations permit the exclusion from regulation of hazardous wastes that, when mixed with water or other wastes, contain concentrations no greater than 1 to 25 ppm.

The Comprehensive Environmental Response, Compensation, and Liability Act (PL 95-510) of 1980, popularly known as "Superfund," provides that any person, company, or government agency that operates a hazardous waste site shall be responsible for its cleanup and for damages to natural resources. The law authorizes EPA to clean up hazardous waste sites and to seek reimbursement for the costs from those responsible for the site.

The Toxic Substances Control Act (PL 94-469) of 1976 requires testing and regulation of potentially toxic chemicals before they are manufactured. The law provides for regulating the production, use, distribution, and disposal of toxic substances and requires manufacturers to notify EPA before a potentially toxic substance is made.

The Marine Protection, Research, and Sanctuaries Act (PL 92-532) of 1972 prohibits the dumping of any radiological chemicals and biological warfare agents into ocean waters except by permit granted by EPA. The act specifically says that no permit shall be issued for dumping chemicals intended to be used in war.

The Occupational Safety and Health Act (PL 92-596) of 1970 sets limits on the level of potentially dangerous chemicals that workers can be exposed to. The limits are published annually by the American Conference of Governmental Industrial Hygienists.

The Hazardous Materials Transportation Act (PL 93-633) of 1974 authorizes the U.S. Department of Transportation (DOT) to designate particular quantities and forms of materials as hazardous, issue regulations for their safe movement, establish a register of those authorized to transport hazardous materials, and make exemptions to the above, if appropriate.

Additionally, U.S. Army regulations and memoranda have addressed responsibilities and procedures for storing, transporting, and disposing of chemical and biological munitions under the above-mentioned laws and amendments. Army Regulation 200-10, in particular, explains the Army's environmental program and assigns responsibilities for its management, including chemical and biological munitions.

Finally, it is important to realize that laws and regulations represent the best judgment of the responsible parties at the time they are implemented. As conditions change (e.g., new knowledge,

technological advances, different values, emergency conditions, or national interests) these laws and regulations are subject to change. However, the committee makes no such proposals at this time.

Executive Order 12088 provides for waivers for these laws in cases of national emergency. To date, however, the Army has not requested waivers for the storage or handling of toxic chemicals. These federal laws normally apply only to regulations setting standards for a specific chemical pollutant. There are no EPA standards for chemical agents, nor are there likely to be any in the foreseeable future. State and local governments, with very limited personnel and budgets and with no expertise in handling chemical agents, are unlikely to play much of a role in protecting the public from these materials.

Public confidence might be increased, however, if environmental standards were to be set by an entity in the Department of Defense that is separate from the U.S. Army Material and Readiness Command (DARCOM), which is responsible for meeting the standards at the sites it administers. Site monitoring might also be separated from DARCOM's responsibility.

LEGAL ASPECTS OF SPECIFIC PROGRAMS

Under the Drill and Transfer System (DATS), unserviceable munitions are drilled in a glove box device and the chemical agent is transferred to a bulk container. An elaborate system of monitoring is used to ensure that no chemical agent is released to the environment. Since DATS contains all vapors, as specified by the Toxic Chemical Hazards or Combined Toxic and Explosive Hazards Safety Standards, it meets the requirements of the applicable air pollution laws. Some very localized air pollution may be caused by the demolition of explosives at the end of the operation. These actions should not degrade air quality or present legal problems.

Although brine solutions are used in DATS for decontamination, the system is designed for total containment, including spills. The brine streams will, presumably, never be released to U.S. waters because they are evaporated in a special facility at Tooele. Thus, DATS complies with federal and state water pollution laws.

The brines will presumably be subject to the hazardous waste management provisions of the Resources Conservation and Recovery Act (RCRA). Complying with RCRA should present no problems for the Army. The munition casing can be treated as material subject to RCRA or be cleaned and treated as a nonhazardous waste. In the past, the brines have been shipped by truck to the Chemical Agent Munitions Disposal System (CAMDS) facility at Tooele, where they were processed through the drum drying facility.

The major problem is likely to be the newness of these requirements. For example, the Pine Bluff Arsenal recently obtained a RCRA permit for disposing of hazardous material (unrelated to storing

chemical munitions). It took considerable efforts to compile the required information, but the permit was granted--the first such permit granted by the state of Arkansas under federal law.

The brines have been classified in accordance with DOT regulations as "corrosive liquids, not otherwise specified." The containers used have liners. Each container is marked with a "corrosive" label and the vehicle in which it is shipped displays "corrosive" placards in accordance with DOT regulations, as required by law. This action is subject to the provisions of the Armed Forces Appropriations Acts of 1969 and 1970.

Because the Surveillance Program, Lethal Chemical Agents and Munitions (SUPLECAM) uses a process somewhat similar to DATS, its legal problems seem to be the same as those already discussed. CAMDS is the most elaborate, currently operational disposal facility. This facility has been safely operating since 1979. Located at the Tooele Army Depot in Utah, it is subject to limits on its emission to the air and its residuals are subject to RCRA requirements. Moreover, the final environmental impact statement for CAMDS operations was prepared in March 1977. As far as is known, the facility is in compliance (see Chapter 12 for more information) with all federal environmental laws and regulations.

9

Stockpile Assessment Panel Findings, Conclusions, and Recommendations

Despite the massive quantities of toxic chemical agents and munitions in the U.S. stockpile, the absence of any significant accident and the occurrence of only a few minor incidents attest to the efficacy of Army operations in managing its toxic chemical inventory.

Thus, the Stockpile Assessment Panel concludes that:

- The Army is competently managing the task of preserving the toxic chemical stockpile within the limitations imposed by each depot's location and by applicable statutes and Department of Defense (DOD) regulations. Further, the management of the various depots seems to conform with relevant Army regulations and procedures.

Nevertheless, there are a number of areas or situations in which improvements could be made.

RECOMMENDATION 1:

Since the auditing responsibility should be separated from line responsibility, the responsibility for setting environmental standards for toxic chemical agents and munitions should continue to reside in a DOD entity completely removed from the U.S. Army Material Development and Readiness Command (DARCOM) chain of command.

RECOMMENDATION 2:

The responsibility for auditing environmental monitoring, whether for storage or disposal, should likewise be separated from DARCOM's responsibilities.

At the present time, the Army monitors the possible leaking munitions on a regular basis only by perimeter detectors or intermittently at the time that igloos are opened for inventory or other routine inspection. New methods exist that permit continuous monitoring of the vents from each individual igloo. This would be

advantageous both with respect to early detection of new leakers and with respect to the safety of those who have to enter igloos for inventory, inspection, or other purposes.

RECOMMENDATION 3:

Continuous remote monitoring of each igloo's exhaust vents should be considered for installation as soon as is reasonably possible. Earliest attention should be given to those igloos containing M55 rockets.

RECOMMENDATION 4:

There is still inadequate information on the cause of leaks in munitions and their probable rate of occurrence over time. Therefore, a permanent record should be maintained of emissions observed to occur at each storage site. This record should be kept at a single location.

RECOMMENDATION 5:

Work should be continued and expanded to elucidate the chemical and physical processes that might compromise the metallurgical integrity of chemical munitions during prolonged storage.

The number of such leakers discovered each year has been small relative to the number of munitions and containers in storage. Nevertheless, they occur in significant numbers. Many of these leakers seem to occur at random, although occasionally an entire production lot can be identified as particularly prone to leakage. The latter may then be segregated for extra careful supervision.

An examination of the data concerning the number of such leakers discovered in recent years indicates that:

- There is no present evidence of a trend that would indicate an increasing rate of deterioration of toxic chemical munitions.

However, in addition to visible evidence of corrosion, there is no reliable data on the possible progressive decomposition of agent and/or accompanying inhibitor with time. Therefore,

- It is not possible to give assurance at this time that an increased rate of deterioration may not occur within the relatively near future.

Relative to the number of munitions of a given type in storage, it is evident, however, that:

- Leakers occur more frequently among M55 rockets than in the other munitions in storage.

Since the leaking munitions can be detected at an early stage, identified, contained, and ultimately disposed of, leakers appear to have a low probability of affecting public health.

- Leakers are handled competently to prevent them from becoming a life-threatening hazard to off-site civilian populations.

A different kind of threatening accident or incident can occur during on-site handling or movement of toxic munitions. Quite properly, most such handling is minimized even when it is unavoidable as in, for example, inventory procedures or in the search for a leaker known to be within an igloo. There were examples witnessed, however, where safety precautions seemed not to be observed as stringently as was reasonably possible. In particular,

- Some toxic munitions in storage were being "uploaded" to full serviceable status by adding bursters under conditions for which safety could have been improved.

The panel further noted that:

- Uploaded munitions make any disposal process much more expensive and dangerous than would have been the case before uploading because of the inherently higher risk and cost.

RECOMMENDATION 6:

Uploading should be minimized or, if possible, discontinued.

A further area of important concern is that the materials are physically secure, both from external and internal intrusion.

- Each facility has adequate base security for conventional threats. Furthermore, even during the period of this committee's inspections, continuing improvements in security have been noticeable.

The nature of the work force at each depot is important. Although there are some significant variations,

- Most facilities are run by civilians with minimal military presence. Furthermore, the work force has a relatively low turnover rate.

Most of the observed sites benefit from a stable and experienced civilian staff. On the other hand, revitalization through persistent recruitment and organizational change appears desirable to sharpen performance.

RECOMMENDATION 7:

Personnel policies should be reexamined at each depot to ensure that the respective work forces have the appropriate experience that comes from stability, on the one hand, and revitalization that comes from new employees on the other.

The situation at Newport is unusual since the storage there is under contractor management. Because changes in procedures may require renewed negotiations, Newport's management may be less responsive to timely changes thought to be necessary.

RECOMMENDATION 8:

The storage of toxic chemical agents at Newport, therefore, should be removed from contractor control and made the direct responsibility of the Army as at other depots.

During site visits in various locations, panel members observed handling of toxic chemical munitions under conditions for which safety precautions could have been improved. In particular, during the handling of M55 rockets, fork lifts were used in a manner that was not as safe as it might have been. On another occasion, too many people seemed to be present during dangerous parts of SUPLECAM operations. In addition, uploading operations in which bursters were being inserted in munitions already loaded with agent seemed to lack maximum care expected in such activities.

RECOMMENDATION 9:

Personnel who handle chemical agents and munitions should be reminded periodically of the importance of adhering to maximum safety precautions. Established procedures should be reexamined to make sure they include optimum safety considerations.

DESIGNING MUNITIONS FOR EVENTUAL DISPOSAL

When toxic chemical agents were first designed and manufactured, too little attention was given to the likely problems that would result from trying to dispose of them when they were no longer needed.

RECOMMENDATION 10:

An integral part of the planning for and cost considerations of a toxic munitions stockpile should be the cost of its eventual safe disposal and the time frame for so doing. Safety must always be the primary consideration above cost.

In fact, part of the costs to society of any munition are those of its disposal. In the case of toxic chemical munitions, the disposal costs may be large compared to those of deployment. Therefore,

RECOMMENDATION 11:

Any new toxic chemical munition should include, as an integral part of its design and manufacture, plans for its storage, monitoring, and eventual disposal. Furthermore, these plans should include recommended processes for safe and effective disposal. These plans should be updated on a regular schedule.

MAXIMUM CREDIBLE EVENT

The Army has procedures for computing the area in which adverse health effects may occur following release of a quantity of toxic agent. The result of the main calculation is the distance downwind at which 1 percent lethality will occur in an unprotected population. The approach requires the formulation of a hypothetical "maximum credible event," which is conceived to be the worst case release of a toxic agent that is reasonably possible given the site specific details of agent storage. The specification of maximum credible events is done at each base in the facility planning process.

- Each Army base with a stockpile of toxic chemical munitions has defined a maximum credible event and has developed plans to respond to it.

Although a given site may have prevailing winds in certain directions, it is possible that at some given time the wind may come from any direction. The plans to respond to a maximum credible event, therefore, encompass the possibility of response within a radius that is calculated as the 1 percent lethality distance.

The estimates of potential hazards using the present maximum credible events are based on dispersion models of chemical agent in the atmosphere, which do not use the best current technology. For events involving large-scale releases, such as from M55 rocket explosions, the calculations should be obtained from better dispersion models that use detailed weather information and incorporate complex terrain effects. Such models have been developed under Department of Energy sponsorship at the Lawrence Livermore National Laboratory, and DOD has selected these models to support contingency planning and emergency response operations at bases where nuclear materials are stored (Dickerson et al., 1983).

RECOMMENDATION 12:

The Army should evaluate the usefulness of the Lawrence Livermore National Laboratory's Atmospheric Release Advisory Capability (ARAC) models as a means of improving its capability to assess and plan for maximum credible events involving large-scale releases.

The plans at a given site for controlling chemical accidents and incidents depend critically on the choice of an appropriate maximum credible event scenario. In considering the maximum credible event chosen for each individual site,

- Other reasonably credible scenarios can be imagined that would involve agent releases in quantities considerably larger than those assumed in a number of the current maximum credible events. These scenarios include airplane crashes or sabotage by determined intruders.

These same changing perceptions of the dangers of either sabotage or terrorist activities and of known natural disasters dictate similar renewed attention to plans for controlling chemical accidents and incidents.

RECOMMENDATION 13:

The general plans for each depot's response to potential terrorist attacks on chemical exclusion areas should be reviewed as soon as possible. The plans should be strengthened to provide an adequate response to such potential incidents.

The following four recommendations relate to the possibility of such extreme scenarios.

RECOMMENDATION 14:

An evaluation should be made to determine if the organizational staffing and equipment available in time of emergency is adequate to control potential accidents or incidents.

At several depots, plans require coordination with and dependence on civilian emergency forces from communities outside the respective bases.

RECOMMENDATION 15:

Plans should be reviewed to ensure that they adequately provide for cooperation with community emergency forces. Particular attention should be paid to communication capabilities, to the provision of adequate equipment off site, and to the training of such units in emergency procedures.

RECOMMENDATION 16:

Army regulations should be reviewed to assess their adequacy to protect against sabotage, theft, and other breaches of security from internal as well as external sources.

The fully protective suiting required in emergencies demands extreme physical conditioning on the part of the wearers, especially in hot climates within which many storage depots are located. No evidence was observed that physical conditioning was a consideration in the emergency plans at each depot.

RECOMMENDATION 17:

Physical conditioning on the part of those who work with toxic chemical munitions should be required as part of the plans for dealing with emergencies.

RELATIVE DISPOSAL PRIORITIES

The Army needs to assess the probability and consequences to public health of possible events believed to be of very low probability. This involves an analysis of the risk to sizeable populations within the area where a toxic agent might be dispersed of in lethal quantities.

- Large populations are included within the 1 percent lethality distance for a number of the storage depots, including all that store M55 rockets.

RECOMMENDATION 18:

Special attention should be given to those cases in which the maximum credible event includes sizeable civilian populations. Disposal should proceed as rapidly as possible for agents or munitions that place civilian populations at risk.

Review of sample calculations shows that the 1 percent lethality distances are at the order of a kilometer or less unless the quantity of agent dispersed were large, as, for example, in an explosive dissemination. Army reports based on field tests indicate that, with the exception of the M55 rocket and the M23 land mine, the explosion of a single munition in an accident under normal storage conditions would not propagate to other similar munitions in the same igloo. In such single detonations, the release of toxic agent is not anticipated to be large.

In the case of M23 land mines, the explosion of one mine in a three-mine container might detonate the other two mines, but further detonation would not occur. For the M55 rocket, however, tests

demonstrate that a series of detonations could spread to all rockets stored in a single igloo.

- There is a demonstrated possibility that the explosion of a single M55 rocket could cause other rockets in the same igloo to explode, a process that could greatly increase the quantity of agent potentially released by a single explosion.

The M55 rockets stored at a number of locations, therefore, represent a special problem. First, they constitute a large fraction of leakers. Second, they are especially dangerous since they are stored with bursters, propellants, and agent in place.

RECOMMENDATION 19:

The Army should give first priority be to disposal of the M55 rockets wherever they are located. This recommendation cannot be stated too strongly.

The committee accepts the conclusion of the Army that:

- There is no indication that explosions of individual artillery shells could propagate to other similar items under the conditions of storage within a given igloo.

Turning to the stocks of bulk agents, the committee notes that:

- Some 60 percent of the toxic chemical materials are stored as bulk agent, which is not militarily useable until it is loaded into munitions.

The Newport depot contains equipment for loading toxic chemicals into munitions. That equipment has not, however, been used for more than 15 years. Moreover, it is maintained by a single knowledgeable employee nearing retirement age. It is very doubtful that this plant could be made to operate quickly in case of an emergency. It would be faster and less expensive to build a new facility than to use what is available at Newport in such a situation.

- There exists no presently operable facility for loading toxic chemical agents from bulk containers into munitions in the United States.
- The time required to synthesize new bulk agent is likely to be less than the time required to build a plant to load such agent into munitions.

This is a relevant consideration in ascertaining the benefits accruing from retention of the bulk agents currently in the stockpile compared to the dangers of that retention. Even under the best

conditions, storage always has some risks. It is very likely that new toxic chemical agents can, in an emergency, be synthesized and loaded into munitions at least as fast as current bulk stocks can be brought to the same deliverable condition.

RECOMMENDATION 20:

Precise time schedules should therefore be determined for synthesizing bulk toxic chemicals in an emergency and for loading them into deliverable munitions.

RECOMMENDATION 21:

If the panel's conclusion is indeed verified, bulk stocks of toxic chemical agents should no longer be maintained. Present stocks should be disposed of as soon as reasonably possible.

Disposal might be less expensive and faster if the current stocks are consolidated at fewer locations. Despite the risks associated with transportation, it may be safer to move the stocks to locations permitting earlier disposal than to preserve them for extended periods in storage at locations where off-site populations are at risk.

RECOMMENDATION 22:

A thorough review should be undertaken of the possibility of transporting toxic chemical munitions and agents to safer locations while awaiting disposal.

RECOMMENDATION 23:

If disposal should be postponed for any significant period of time or abandoned because of changed conditions, the Army should consider selectively consolidating its eight storage depots, consistent with strategic military considerations.

The panel's final recommendation summarizes the relative priorities that should be given to the various chemical agents and munitions for disposal at each storage depot. These priorities take account of the type of stored materials, the location, proximate population, and other information relevant to each site where toxic chemical munitions are stored.

RECOMMENDATION 24:

Considering the local geography, the nature and storage conditions of the stockpile, and practices and procedures in use, the disposal priority should follow the perceived risks as designated in Table 7.

TABLE 7 Relative Priority for Disposal by Agent, Munition Type, and Location

	GB		VX		H/HD/HT		BZ	
ROCKETS	ANAD	VH	ANAD	VH				
	LBDA	VH	LBDA	VH				
	UMDA	VH	UMDA	VH				
	TEAD	VH	TEAD	VH				
	PBA	VH	PBA	VH				
BULK	APG	H	APG	H	APG	H	PBA	L
	ANAD	M	ANAD	M	ANAD	M		
	TEAD	M	NAAP	M	PBA	M		
	UMDA	M	TEAD	M	TEAD	M		
			UMDA	M	UMDA	M		
SPRAY TANKS			UMDA	M				
			TEAD	M				
MINES	ANAD	M	ANAD	M				
	UMDA	M	UMDA	M				
			TEAD	M				
			PBA	M				
BOMBS	UMDA	M					PBA	L
	TEAD	L						
ARTILLERY	ANAD	M	ANAD	M	ANAD	M		
	LBDA	M	LBDA	M	UMDA	M		
	UMDA	M	UMDA	M	LBDA	M		
	TEAD	L	TEAD	L	PUDA	L		
					TEAD	L		

The symbols designate a disposal priority as derived from a combination of probability of occurrence of an accident or incident and the seriousness of the consequences of such an event, particularly with relevance to off-site populations. Although in most cases the probability of an accident or incident is low, those cases labeled VH or H may endanger sizeable civilian populations.

VH = Very High Relative Disposal Priority
H = High Relative Disposal Priority
M = Medium Relative Disposal Priority
L = Low Relative Disposal Priority

NOTE:
ANAD = Anniston
APG = Aberdeen
LBDA = Lexington-Blue-Grass
NAAP = Newport
PBA = Pine Bluff
PUDA = Pueblo
TEAD = Tooele
UMDA = Umatilla

Part III
Report of the Technology Assessment Panel

10

Major Alternatives

From 1982 through 1984, the U.S. Army Toxic and Hazardous Materials Agency (USATHAMA) allocated more than $27 million for investigations of possible techniques for disposing of chemical munitions and agents. The Technology Assessment Panel received detailed briefings by Army personnel and contractors as well as other organizations and individuals on the many features of current technology and alternative processes. Detailed descriptions and analyses of all these options, together with their possible permutations and combinations, would be outside the purpose of this report.

The major, qualitatively distinct alternatives are: placement in the deep ocean, thermal processes, chemical transformation, destruction by nuclear explosion, and some other "novel techniques." Each is discussed briefly below. The major approach favored by this panel--incineration--is treated in Chapters 11-14.

PLACEMENT IN THE DEEP OCEAN

Before 1972, placement in the deep ocean was the method of choice for large-scale disposal (see Chapter 2). Because of increasing concern over its possible environmental impact, however, this method has been prohibited by the Marine Protection, Research, and Sanctuaries Act of 1972 (PL 92-532). That act states, "No person shall transport from the United States any radiological, chemical, or biological warfare agent...for the purpose of dumping into ocean waters." Further, "No officer, employee, agent, department, agency, or instrumentality of the United States shall transport from any location outside the United States any radiological, chemical, or biological warfare agent...for the purpose of dumping it into ocean waters."

A principal advantage of ocean placement is that the chemical agent need not be removed from its container. The containers do not even need to be unpacked. This advantage, however, must be weighed against the known disadvantages of (a) transporting (in most cases) large quantities of explosive and highly toxic materials over great

distances, and (b) the unknown effects that these munitions and agents might have on the marine environment. These unknowns include questions about whether fuzes might ignite upon striking the ocean bottom, the rate of degradation of the containers and consequent rate of release of agents, the condition of agents after they are exposed to sea water, and their effects on marine life.

Disposal of chemical agents in the deep ocean is not consistent with current national and international law, and attempting either to modify the laws or to seek an exception does not seem justified at this time. Nevertheless, ocean disposal might be suitable for some by-products of other disposal processes (e.g., metal parts that have been chemically decontaminated or salts that have been removed from scrubbers in the exhaust gas stream of an incineration facility). Such disposal would be subject to environmental regulations.

THERMAL PROCESSES

Thermal destruction processes, including pyrolysis and combustion, can be used to destroy toxic organic compounds where the toxicity is associated with the molecular structure of the compound rather than with a specific toxic element (such as lead) contained in the molecule.

In pyrolysis, the toxic material is heated to a sufficiently elevated temperature in the absence of oxygen so that the molecule decomposes to a more stable and presumably less toxic form. Combustion is generally more effective than pyrolysis in detoxifying organic materials since the products of complete combustion are either harmless (e.g., water and carbon dioxide) or can be absorbed by effluent gas scrubbers (e.g., acidic components).

Information available from both laboratory and pilot-scale studies (Brooks and Parker, 1979; Yurow, 1981) indicates that the chemical agents mustard, GB, and VX are readily destroyed by incineration (combustion). Their chemical structures do not suggest any unusual tendencies to form stable, toxic intermediate products that would not undergo complete combustion. As noted in Table 3, the Army has incinerated mustard at the Rocky Mountain Arsenal near Denver, Colorado. GB has also been incinerated at the Chemical Agent Munition Disposal System (CAMDS) at Tooele, Utah. The feasibility of incinerating VX at CAMDS was demonstrated in June 1984 (Baronian, 1984).

Thus, combustion based on an evolutionary rather than a revolutionary incineration technology is the preferred method for safe disposal of the chemical munition and agent stockpile.

In addition, the Department of Defense (DOD) generates a substantial quantity of industrial and hazardous wastes, which must be disposed of in an environmentally acceptable manner. It might be possible to increase substantially the life-cycle benefits of the disposal facilities for chemical weapons if the incineration systems could be subsequently modified to dispose of other DOD wastes.

CHEMICAL PROCESSES

An intuitively attractive approach to destroying chemical agents is to mix them with other, inexpensive chemicals and produce harmless (perhaps even useful) end products. As noted in Chapter 2, when CAMDS began operation in 1979, it tested a process of caustic neutralization to destroy GB. These tests, however, were not encouraging. Based upon laboratory measurements of chemical reaction rates, GB has a half-life of less than 1 second in a 5 percent aqueous solution of sodium hydroxide (Yurow and Davis, 1982). Thus, caustic neutralization was expected to progress rapidly. In practice, however, it was difficult to achieve the necessary mixing of components. To speed up the process, excess quantities of sodium hydroxide were added. Still, more than two weeks were often required before the GB was adequately neutralized; i.e., could no longer be detected (Scott, 1984a; Paulick, 1984).

Not only did the use of excess caustic increase the operating costs, but it also produced larger quantities of waste than had been anticipated. Calculations, based on simple chemistry, indicated that for every pound of GB destroyed about 1.5 pounds of salt wastes would be produced (Little, 1982). In actuality, about 5 pounds of wastes were produced (Jody et al., 1983).

These unexpected extra wastes came from (1) additional quantities of sodium hydroxide added to the mix in an effort to speed up the neutralization process, and (2) the solutions used to wash down and decontaminate the equipment. Although the salts contained no detectable amounts of agent, they could not be disposed of in an environmentally acceptable way because they contained sodium fluoride, phosphonates, and heavy metals (Jody et al., 1983). Moreover, these wastes were mainly organic salts that could, during the spray-drying operation, revert to GB (Jody et al., 1983; Scott, 1984a; Little, 1982; Yurow and Davis, 1982). Therefore, they cannot be placed in landfills without expensive precautions. Instead, they are being stored in drums at CAMDS awaiting a solution to the problem of their disposal (Jody et al., 1983).

The neutralization process for VX is even more uncertain than that for GB (Jody et al., 1983; Scott, 1984; Yurow and Davis, 1982). It seems that: (1) VX contains a contaminant, about 10 percent, that resists hydrolysis; (2) the reaction for VX is highly exothermic and might "run away," leading to an explosion; and (3) chemical neutralization of VX has never been demonstrated at the pilot plant scale.

The prospects for chemical neutralization of mustard appear even less attractive because of its low solubility and the imperfect characterization of products of the reaction process. Further, high temperature and pressure would be needed to achieve practical reaction rates (Jody et al., 1983).

Were the Army to choose chemical neutralization as the principal disposal method, separate facilities would be needed for each of the agents to be neutralized or, alternatively, one agent could be processed and the facilities then modified to accommodate other agents. The first option not only entails extra capital expense, but also would reduce safety by complicating the number of different processes that would have to be developed, thereby multiplying the number of things that might go wrong. The second option also requires knowing what agent will be found when an artillery projectile is opened. As noted in Chapters 12 and 14, the records on these aging weapons are not entirely complete.

Finally, the Tooele experience indicated that a facility for chemical neutralization needs two special furnaces—one for decontaminating the metal parts and a second for deactivating the explosives (fuzes and bursters) that have been removed from artillery projectiles. Earlier experience at the Rocky Mountain Arsenal demonstrated that the metal parts furnace was satisfactory for incinerating mustard (U.S. Army, 1979). Thus, the Army found it advantageous to abandon the chemical process entirely and use the furnace already at hand not only for decontamination of metal parts but also for agent incineration (see Chapter 12 for details). The design for a planned disposal facility on Johnston Atoll substituted a $2.5 million liquid incinerator for the $29 million chemical neutralization system first tried at CAMDS (Scott, 1984a). According to Little (1981), "The total cost savings when burning agents in two JACADS [furnaces] rather than neutralizing them is $19,521,000."

Despite these problems, the Army's Technology Development Program, in its concept development phase, included one contract to explore chemical procedures such as hydrolysis, anhydrous chlorinolysis, and aqueous chlorinolysis (Jody et al., 1983). None of these chemical processes showed particular promise (MITRE Corp. 1983d). Further, each required incineration of the by-products.

The contractor also investigated the possibility of converting GB to methyl phosphonic difluoride (called difluoro or DF), a constituent of binary chemical weapons. Although it is possible to produce DF from GB, no decisions have as yet been made regarding the Army's need for this chemical. In any case, difluoro produced from GB would cost about $28 per pound (this includes the expense of the disposal of GB) (Jody et al., 1983) whereas it can be manufactured commercially for about $15 per pound (Liederitz, 1984). In spite of an extensive search, no other chemical by-products of commercial value could be identified (Jody et al., 1983).

In conclusion, when compared with disposal by incineration, chemical neutralization processes are slow, complicated, produce excessive quantities of wastes that cannot be certified to be free of agent, and would require higher capital and operating costs. The panel agrees with the Army's decision to abandon chemical neutralization processes in favor of incineration.

USING NUCLEAR EXPLOSIONS FOR DISPOSAL

The concept of using nuclear explosions to dispose of chemical weapons is deceptively simple. It proposes to place all agents, packaging, metal parts, and explosives for either munitions or bulk containers in deep underground cavities and then to destroy them by exposure to the very high temperatures created by a nuclear explosion. Whatever residues are left would pose no more hazard to the environment than those from other underground nuclear explosions. A variety of methods for creating the cavities--normal tunneling, hydraulic mining, and the use of prior nuclear explosions--have been studied (Duff, 1982).

The principal advantage of disposal by nuclear explosion lies in the fact that no disassembly of the munitions or draining of agent from bulk containers would be required. Furthermore, no disposal of metal parts or other residuals would be involved.

On the other hand, there are the political and geophysical hurdles of finding an acceptable underground site and of gaining public acceptance of an underground nuclear explosion for the purpose of destroying chemical munitions. Additionally, it would be necessary to transport the chemical munitions and agents to the disposal site and place them into the underground cavity. Those operations would be costly, and would add to the risk and the political difficulties of disposal (Duff, 1982). Finally, it is not clear that this disposal method could satisfy criteria for verifiability if a treaty banning chemical munitions is agreed upon.

Thus, the problems inherent in disposal by nuclear explosions and in the transport of chemical agents seem serious enough to preclude further consideration of such disposal. Nevertheless, this disposal method might be attractive to other countries if they did not, in practice, face all of these problems.

OTHER NOVEL CONCEPTS

As part of its search for alternative industrial or experimental technologies for disposing of chemical agents and munitions, the Army made a concerted attempt to identify novel technologies that had not been previously evaluated. Numerous thermal and chemical alternatives were investigated as well as long-term storage options, the use of natural geophysical forces, and various biological, radiological, and mechanical methods.

As a result of these efforts, four approaches were identified for more detailed study (Moynihan *et al.*, 1983):

- In-shell combustion. After removing the burster charge from an artillery shell, an oxyacetylene flame would be directed into the burster well to burn through the well and incinerate the agent in situ.
- Steam pyrolysis. After removing the burster charge, the burster well would be perforated mechanically. Then, superheated steam at about 760°C would be used either to

vaporize the agent or to blow it out of the shell. Both the agent and the shell would be heated to more than 540°C for sufficient time to render it safe.

- Drain-in-furnace. After removing the burster charge, the burster well would be perforated mechanically. The shells would then be placed in a furnace and inverted, allowing the agent to drain into the furnace for incineration. The high temperatures generated by the burning agent would decontaminate the shell from which it came.
- Underground combustion or caustic hydrolysis. Munitions would be lowered into large (e.g., 12 feet by 12 feet) chambers excavated deep underground and deactivated either by incineration or by caustic hydrolysis.

In the first three, the processing and furnace equipment could be mounted in trailers and moved from depot to depot. Whether this could be practically, reliably, and safely done has not been determined (MITRE Corp., 1983b). Any geographical consolidation of existing stockpiles would lessen the advantages of a transportable disposal system.

After reviewing these alternatives, the Army decided to consider only the in-shell combustion approach for further study. This method might significantly reduce costs with only a moderate degree of technological risk. In-shell combustion also offers a potential for high production rates (4.5 times the baseline rates discussed in Chapter 13) and does not require heavy firebrick furnaces.

Each munition type, however, would require its own specially designed system for removing lifting lugs and bursters. In addition, oxygen flow rates must be carefully controlled to prevent positive pressures and the possible buildup of explosive gas mixtures. While this system has not been proposed for handling bulk containers, it might be suited to that task (see Chapter 12). Despite its problems, the method has merit and should be explored further. It might be particularly suited for the Pueblo depot, where there are neither bulk containers nor rockets.

The panel identified one novel method of high temperature pyrolysis that has not been reviewed by the Army (J. M. Huber Corp., undated). With this method, a vertically oriented porous cylinder of refractory material is radiantly heated to about 2,500°C. Liquid droplets or fine powders are fed into the top of the cylinder, fall through it, and are destroyed. Nitrogen gas is diffused through the cylinder to prevent the feed-stock from contacting the vessel's walls. This technology might be appropriate for disposing of liquid agent drained from bulk containers or munitions. A system of this type, if it could be produced commercially, would probably be transportable.

11

Principal Elements of the Disposal Process

The thermal disposal process encompasses a number of separate elements. The actual number varies because some proposed systems combine several elements in a single operation. At one extreme, for example, one might deposit quantities of munitions still in their original packings into deep cavities, provide a large energy source (such as a nuclear explosion) and incinerate the entire mass at once. At the other extreme, the munitions might be individually disassembled and the pieces separately destroyed in, roughly, a reversal of the original manufacturing process (see Figure 8).

This chapter gives a brief overview of the principal elements of the disposal process. The following chapters describe actual processes in more detail, while Chapter 14 discusses some options for improved technology.

TRANSPORTATION

The chemical munitions and agents to be destroyed must be transported from the storage site to a disposal facility at the same depot or farther if disposal is to be carried out at a different depot. Because of the highly diverse storage conditions, this operation is likely to use conventional, labor-intensive methods and equipment. Although there has been little examination of on-site transportation in the various attempts to find better technology, it is not expected to be the rate-limiting feature of future processes.

The munitions and/or chemical agent containers need to be unloaded into a receiving area at the disposal facility. Loading, transporting, and unloading, even within the confines of a given depot, may be complicated by leaking munitions or containers that need to be overpacked in some way for safe movement.

UNPACKING

Most disposal operations now under consideration (and all proven operations) require that the munitions be removed from their packing

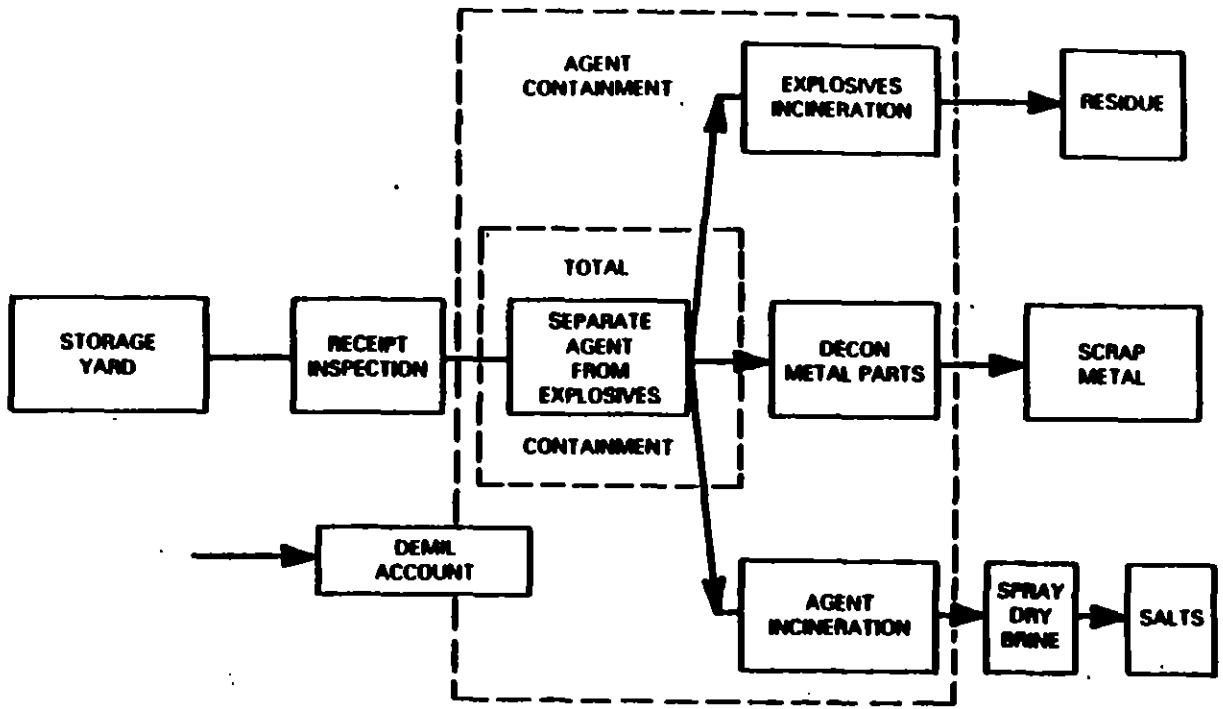

FIGURE 8 Schematic of present practice.
Source: USATHAMA.

containers and subsequently handled as individual items. Bulk containers are not generally packed. Leakers, whether munitions or bulk containers, have to be enclosed in some sort of overpacking.

Unpacking is currently done manually. If a check confirms that there are no leakers, the operators wear gloves and carry masks on their belts. If leakers are to be handled, the operators wear fully enclosed and externally ventilated special suits called "demilitarization protective ensembles" (USATHAMA, 1979).

Plans for future facilities contemplate a variety of unpacking operations that would be remotely controlled because of hazards associated with leakers. Such processes will be complicated by variable conditions, such as nonstandard pallets and highly variable methods for overpacking leakers. Dunnage from the various packing arrangements constitutes a considerable bulk of debris, and dunnage from leakers is toxic. As noted above, some concepts would avoid such complications by handling entire groups of munitions without unpacking.

GAINING ACCESS TO AGENT AND EXPLOSIVES

One must gain access to the chemical agent before it can be destroyed. Because most chemical weapons contain explosives, gaining access to the agent is a hazardous operation. It is also one of the major items of expense. For bulk containers, such as 1-ton containers or aerial spray tanks, access is relatively straightforward via existing drainage ports or by simply piercing the container. For artillery projectiles, gaining access to the agent is more difficult because of the thickness and strength of the projectile walls.

For munitions containing explosives, all present and most contemplated disposal procedures require that the agent and explosive be separated before incineration, or at least that the explosive be well exposed so that it can be destroyed without detonation. If, in addition, the munition contains a fuze, then the fuze needs to be separated from the explosive (or at least from most of it) to avoid detonation during disposal.

Much of the recent research has focused on efforts to find better ways of gaining access to the chemical agents. Whereas today's conventional or baseline technology consists essentially of mechanical disassembly, proposed approaches seek simpler techniques, ones that do not strongly depend on specific munition details. Munition-specific disassembly techniques, in addition to being relatively complex, can be frustrated by unexpected variations in assembly details or by munition deterioration in storage. Some of the proposed methods further seek to avoid handling of individual munitions (see Chapter 14).

DESTROYING THE AGENT

As discussed in Chapter 10, incineration is the favored destruction method. The chemical agents (mustard, GB, VX, and BZ) all burn readily, with destruction of the agent if combustion is complete (Barrett, 1977; Brooks and Parker, 1979; Reeves and Kartz, 1954; Pugh, et al., 1970; Wynne, 1973; Yurow, 1981).

The stoichiometric equations for the combustion of mustard, GB, and VX* with oxygen are given by equations 1 to 3 respectively (Yurow, 1981):

$$2\ (ClC_2H_4)_2S + 13\ O_2 \longrightarrow 8\ CO_2 + 2\ SO_2 + 4\ HCl + 6\ H_2O \qquad (1)$$

$$2\ CH_3\text{-}\underset{\underset{OC_3H_7}{|}}{\overset{\overset{O}{||}}{P}}\text{-}F + 13\ O_2 \longrightarrow 8\ CO_2 + 9\ H_2O + P_2O_5 + 2\ HF \qquad (2)$$

$$2\ CH_3\text{-}\underset{\underset{OC_2H_5}{|}}{\overset{\overset{O}{||}}{P}}\text{-}S\text{-}C_2H_4N(C_3H_7)_2 + 39.5\ O_2 \longrightarrow 2NO_2 + P_2O_5 + 2\ SO_2 + 22\ CO_2 + 26\ H_2O \qquad (3)$$

All three of these agents are reasonable fuels and have relatively high adiabatic flame temperatures (about 1,370°C) (Mink et al., 1983). However, since these agents contain elemental chlorine, fluorine, phosphorous, and sulfur, their combustion products, even if they contain no agent whatsoever, must be controlled. Either air pollution control systems must be used to prevent their release to the atmosphere, or the incineration process must be designed to capture them.

The detailed nature of the incineration process and associated equipment depends on the preceding "front-end" preparation work and the resultant state of the agent and munition (or container) components. For example, the agent might be (1) drained from its container and fed as a liquid to the incinerator, (2) volatilized from its container, (3) burned within the container, or (4) fed in a mixed stream into a furnace together with the container and explosive segments. In the latter, mixed-feed form, the heating value of the explosive could be used directly to help incinerate the agent.

*Detailed information relating to the combustion of BZ can be found in Ballantyne et al. (1981) and Mezey et al. (1980).

The existing kinetic data on agent combustion appears to be adequate for the effective design of conventional incineration systems. Additional kinetic studies may be required if designers want to substantially modify the combustion process to improve new incinerator designs. Such efforts do not seem justified in view of the finite quantities of agent involved.

DEACTIVATING THE EXPLOSIVES

Safe destruction of explosives by combustion requires that they be unconfined so that relatively slow burning (deflagration) will not transform to detonation. Detonation is extremely violent and is likely to damage surrounding equipment and/or containment vessels. Since fuzes are designed to cause detonation, they should be detached from the explosives prior to incineration. Since explosives might be contaminated with agent through leakage or through the preparation process itself, effluent from their burning must be safely detoxified before discharge to the environment.

In current practice, explosive charges (i.e., bursters) are separated from the munition by disassembly. The bursters are prepared for safe burning by shearing into several pieces (at least three) before being placed in a rotary kiln. Cryogenic fracturing techniques (see Chapter 14) might avoid the difficulties of disassembling the munitions and shearing the bursters.

DECONTAMINATING THE SOLIDS

All metal components must be adequately decontaminated prior to disposal. According to Army regulations, heating such components to a temperature in excess of 538°C (1,000°F) for 15 minutes achieves a "5X" decontamination state and renders them safe for salvage and sale (DARCOM, 1982). Such solid material has been sold as ordinary scrap metal in previous operations (USATHAMA, 1983). Metal components that have been chemically decontaminated to a "3X" state, such that no agent can be detected on the surface of the metal, may be shipped in military vehicles or in commercial vehicles with military escort.

When the Chemical Agent Munitions Disposal System (CAMDS) first began operating, a chemical neutralization process was used to destroy the agent. The solid materials were decontaminated in special furnaces (typically fired by fuel oil or electrically heated). Newer efforts are exploring concepts for simultaneous decontamination of metal components directly within the incinerator (typically, a rotary kiln) used to destroy the chemical agent.

While such decontamination is conceptually straightforward, "5X" decontamination of 1-ton containers is currently difficult and costly because of their size. An alternative for depots having only small

supplies of a particular munition or bulk material might consist of draining the agent and chemically decontaminating its residue within the container to a "3X" level. The containers might then be transported to another facility for thermal decontamination. Alternatively, if the costs of transporting and processing the containers exceeds their scrap value, they might be crushed and placed in the deep ocean.

DISPOSING OF WASTES

Liquid, gaseous, and solid effluents from a disposal facility must not only have extremely low concentrations of toxic agents (see Chapter 8), but they must also meet local, state, and federal emission standards for other pollutants (see Appendix E). The known thermal destruction processes produce considerable solid waste material in the form of inorganic salts. These salts might be classified as hazardous materials under the Resource Conservation and Recovery Act because of their relatively high content of heavy metals (e.g., cadmium and lead), which come from the munitions. These materials must, in turn, be stored safely for long periods.

Packing materials also contribute a considerable stream of solid waste. If not contaminated by agent, such materials can be discarded in a landfill or destroyed in conventional incinerators. Contaminated dunnage must be incinerated or otherwise disposed of by any means consistent with the safe destruction of any agents present.

MATERIALS HANDLING

The elements of the thermal destruction system are tied together in an overall process that requires many and varied techniques for handling materials. An inherently unsteady flow of discrete munitiqns (or pallets of munitions) and containers is fed into the system. However, the various incinerators operate most effectively if they receive a steady flow of material.

Process design is further complicated by the hazards of handling toxic agents and explosives, and by the difficulties of ordinary maintenance tasks in toxic surroundings. Under these conditions, a simple and reliable design is unusually important. There are significant opportunities for improving and simplifying the design of systems for handling materials (see Chapter 14).

VERIFICATION

An international treaty barring the use of chemical weapons will necessarily include the destruction of the entire stockpile of agent and munitions. Doubtless such a treaty will also require strict

verification of the destruction. Therefore, it is desirable to include "adequacy of verification" as one of the criteria to be used in evaluating various disposal options.

In November 1983, representatives of several foreign governments visited CAMDS to review its processes for chemical weapons disposal and their verification. The verification procedure that was demonstrated included sampling and analysis techniques (such as gas chromatography) to determine the identity and purity of the agents, and weighing individual munitions prior to and after destruction of their contents to determine the quantity of material destroyed (Mikulak, 1984). The demonstration was attended by 43 representatives of 28 countries, but not by representatives of the Soviet Union (Whelan, 1983a).

MONITORING AGENT CONCENTRATIONS

To monitor the effectiveness of the destruction process and to ensure the safety of workers, the Army needs effective, reliable, sensitive, and fast-acting instruments and techniques for sampling and analyzing of agents in all operational areas, including both the incinerator stack effluent and the ambient air. Generally, the stack effluent is saturated with water and contains a quantity of water/acid aerosols that absorb a fraction of any agent present. Hence, aerosols in stack gases must also be collected and analyzed for agent. The ambient air is largely free of aerosols, but it can contain other pollutants that interfere with agent quantification.

A monitoring system (i.e., a combined sampler, analyzer, and alarm, with recorder) should be able to detect agents rapidly in either the stack or the ambient environment. It should discriminate between the agent and other background chemicals to minimize false alarms. The monitoring system should also be reliable, maintainable, and highly automated. A monitoring system currently under development by the Army may meet these requirements.

Mass spectrometry may have the greatest potential. Two promising developments are the Navy's central atmospheric monitoring system (CAMS II) and the atomopheric pressure ionization radio frequency mass spectrometer (APIMS-I), currently under development (NRC, 1984).

Sampling and analysis problems are particularly severe for VX because of its low vapor pressure, its thermal instability, and its propensity to be adsorbed on almost any surface, including feed lines between the point to be measured and the measuring instrument. Thus, instruments for detecting VX must be extremely sensitive.

12

Current Facilities and Techniques

DRILL AND TRANSFER SYSTEM

The Drill and Transfer System (DATS) is a portable facility, mounted on a series of trailers, designed to drain chemical agents from leaking munitions at the depots where they are currently stored. As the name implies, the agent is reached by drilling through the munition wall. The agent is not destroyed. Rather, it is transferred to a suitable container for safe storage. After being drained, the munition casings are decontaminated chemically. Explosives are left within the casings to be destroyed later by detonation.

DATS can process about one munition per hour. This is done individually and manually within a glove box. Drilling is accomplished with an ordinary twist drill in a drilling machine equipped with safety interlocks to avoid excessive penetration that might detonate the explosive elements within the munition.

The DATS system began pilot testing at Dugway Proving Ground in Utah in 1980. It is currently making the rounds of depots, processing accumulated stocks of leakers. DATS is scheduled to complete its round of visits in 1985 and then to stay at Dugway Proving Ground, having processed about 800 munitions.

DATS or other facilities of similar design might continue to process newly discovered leakers or occasional troublesome munitions that, for whatever reason, cannot be handled by the large production facilities now being developed. DATS might be used to remove the agent from duds discovered on firing ranges where chemical munitions have been fired in the past, but the risk of handling potentially armed and fuzed munitions in a glove box seems excessive.

CHEMICAL AGENT MUNITIONS DISPOSAL SYSTEM

The Chemical Agent Munitions Disposal System (CAMDS), located at Tooele, Utah, is designed as a flexible facility for developing and testing disposal technology. It has already been used to dispose of

considerable quantities of unserviceable munitions at Tooele (see Chapter 2). Technology developed at CAMDS is to be used for the disposal of rockets and land mines at various locations, and for designated stocks at Johnston Atoll. The Johnston Atoll Chemical Agent Disposal System (JACADS) is a direct descendant of CAMDS, in many respects using similar equipment.

CAMDS can dispose of all types of munitions and containers in the chemical stockpile. To do so, it uses a variety of equipment serviced by numerous and sometimes complex conveying systems. CAMDS was first used for chemical neutralization of GB, but that process proved too slow and difficult (see Chapter 10). Subsequently, incineration of both GB and VX was found effective. Mustard can also be incinerated, as was proven at the Rocky Mountain Arsenal. BZ was incinerated in tests conducted at Pine Bluff and at an independent laboratory (Ballantyne et al., 1981; Mezey et al., 1980).

Several types of furnaces and burners are available for thermal processing of materials, including a rotary kiln deactivation furnace and a three-stage, roller hearth furnace for decontaminating metal parts. There are also dunnage and liquid incinerators. All are equipped with appropriate afterburners and/or pollution control systems. Table 8 summarizes the destruction techniques currently in use.

A 30-foot-long rotary kiln is used to burn explosives and propellant elements from rockets, landmines, and projectiles, at the same time that it decontaminates their associated metal components. Explosives and propellants are chopped into small pieces to expose sufficient surface area to avoid triggering detonation during burning.

The furnace is gravity-fed through a double-tipping valve. It discharges onto an electrically heated discharge conveyor. The latter provides sufficient temperature for the time required to ensure complete "5X" decontamination of metal parts. Gases discharged from the furnace are passed through an afterburner (to ensure complete destruction of agent traces) and emission control systems prior to being exhausted to the atmosphere.

The stack effluents from the Chemical Agent Munitions Disposal Systems comply with relevant emission standards for both GB and VX (USATHAMA, 1983b; Baronian, 1984). The maximum emission limits, which were established by the surgeon general of the Army, (expressed in milligrams per cubic meter) are: GB - $3x10^{-4}$ averaged over 2 hours; VX - $3x10^{-5}$ averaged over 2 hours; and mustard - $3x10^{-2}$ averaged over 1 hour (USATHAMA, 1983a). These emission requirements have been published in environmental impact statements and reviewed by the Environmental Protection Agency (EPA).

While detailed statements of approval were not evident to the panel, EPA's review of the final enviromental impact statement for the Drill and Transfer System at Dugway Proving Ground, which operates under the same agent emission limits, listed "no serious objection to the proposed procedure..." (Hasson and Kilmer, 1978). Similarly, a letter dated July 14, 1971 from J. Steinfeld, surgeon general of the Public Health Service, to Vincent P. Huggard, acting assistant secretary of

TABLE 8 Baseline Technology for Disposal of Chemical Munitions: Destruction

MUNITION TYPE	DESTRUCTION OF ENERGETIC MATERIALS	DESTRUCTION OF AGENT	DECONTAMINATION OF METAL PARTS
M55 Rockets with GB & VX	DEAC Furnace	Liquid Incinerator	Heated Discharge Conveyor
M23 Land Mines with VX	DEAC Furnace	Liquid Incinerator	Heated Discharge Conveyor
Projectiles with GB & VX	DEAC Furnace	Liquid Incinerator	Metal Parts Furnace
Projectiles with H	DEAC Furnace	Metal Parts Furnace	Metal Parts Furnace
Bombs with GB	---	Liquid Incinerator	Metal Parts Furnace
Mortars with H	DEAC Furnace	Liquid Incinerator	Metal Parts Furnace
TCs with GB & VX	---	Metal Parts Furnace	Metal Parts Furnace
TCs with H	---	Metal Parts Furnace	Metal Parts Furnace

DEAC = deactivation furnace that decontaminates the metal
TC = ton container
Source: Scott, 1984b.

the Army for installation and logistics, offered the following recommendation: "The maximum emission into the atmosphere of agent GB from any source shall be less than 0.003 mg/cum." This is exactly the same as that set by the Army surgeon general.

The CAMDS decontamination furnace for metal parts (and a similar one for JACADS) is a large unit costing more than $9 million--it is the most expensive item in the entire array of equipment (Scott, 1984b). It is used both to process agent-filled items and to provide "5X" decontamination of metal components. It is designed to volatilize chemical agents from containers or projectiles. In spite of its relative slowness, this process was selected in view of prior difficulties encountered in draining some mustards from containers (Jody et al., 1983; Lawhorne, 1977; USATHAMA, 1983a). As discussed in Chapter 14, this volatilization process seems unnecessary. Programs are already under way to develop improved technologies that drain the agent and destroy it in liquid incinerators.

The metal-parts-decontamination furnace has three chambers. The first is an unheated station wherein 1-ton containers are pierced. The second volatilizes the agent, while the third heats the metal container to provide "5X" decontamination. The furnace is fired by fuel oil and can process a single 1-ton container in about two hours. The furnace is also used to process groups of projectiles in eggcrate-like carriers of cast stainless steel.

Effluents from the volatilization chamber are destroyed in a primary burner and then passed into an afterburner, where they are joined by effluent from the decontamination chamber. They then pass through a pollution control system where acids (e.g., hydrochloric and hydrofluoric), particulates, and other undesirable materials are scrubbed out and prepared for storage and subsequent disposal. Gases emitted to the atmosphere are carefully monitored to ensure that they are within the allowable limits established by regulation.

Clean dunnage is burned in a conventional incinerator while contaminated dunnage (from leakers) is burned either in the deactivation furnace or in the metal parts furnace.

As summarized in Table 9, preparation of munitions for incineration is entirely a mechanical process. Munitions containing explosives have been processed in a large (10 feet in diameter by 24 1/2 feet long) explosive containment cubicle (cylinder) having 2 1/2 inch-thick steel walls, designed to safely contain an accidental detonation of an 8-inch projectile. A larger explosive containment room with reinforced concrete walls has been designed for the same purpose at JACADS. It will first be tested at CAMDS as a replacement for the existing explosive containment cubicle.

Thin-skinned munitions, including the M55 rocket with its aluminum shell and the M23 land mine, can be "opened" by mechanical shearing. The rocket is sheared into five pieces (see Chapter 14) while still in its fiberglass shipping container/launch tube. Segmenting was first done by sawing rather than shearing, but frequent difficulties were encountered. In fact, the saw caused two propellant fires within the explosive containment cubical (Paulick, 1983). Nevertheless, thousands of rockets have been destroyed this way.

TABLE 9 Baseline Technology for Disposal of Chemical Munitions—Front-end Measures

TYPE OF MUNITIONS AND METHOD OF SIZE REDUCTION	ACCESS OF AGENT	REMOVAL OF AGENT	REMOVAL OF EXPLOSIVES
M55 Rocket Shear	Punch	Drain	Remain in Rocket
M23 Land Mine Punch Out Booster	Punch	Drain	Remain in Mine
Projectiles with GB and VX Shear	Burster Well Removal	Drain	Reverse Assembly
Projectiles with H Shear	Burster Well Removal	Volatilization	Reverse Assembly
Bombs Not Applicable	Punch	Drain	No Explosives
Mortars No Reduction	Burster Well Removal	Volatilization	Reverse Assembly
TCs with GB & VX No Reduction	Punch	Drain	No Explosives
TCs with H No Reduction	Punch	Volatilization	No Explosives

TC = Ton Container
Source: Scott, 1984b.

More recently, a far simpler, guillotine-like shearing device has been used to make thousands of cuts without igniting the propellant or bursters and with negligible blade wear (Seat, 1984b). A similar, though smaller, shear has also sliced through many bursters (in their tubes) without difficulty.

Heavy-walled munitions, such as artillery projectiles, are opened by disassembly. The nose closure, either fuze or lifting ring, is unscrewed and various underlying pieces (sometimes variable arrays of such pieces) are extracted mechanically. The burster, if present, is extracted with a vacuum system. Access to the agent is then achieved by removing the pressed-in burster well (see Figure 3). The burster well is simply gripped by an expanding internal collet and pulled out.

This operation is sometimes frustrated by a welded-in burster well,* in which case the weld must be machined away and extraction attempted again. The agent might be pumped from the open projectile or volatilized from it in the metal parts furnace. Pumping through a vertical suction tube is preferred to simply inverting the munition because the pump can be monitored to indicate progress.

The work stations used to perform these disassembly tasks are arranged in a linear fashion along one or more conveyor lines. This arrangement is easily modified to try different components and to accommodate different munitions. A carousel-type machine, typical of multistage machining operations, though less flexible, would be more appropriate for production operations. Carousel designs have been specified for JACADS and prototype machines are first to be proven at CAMDS.

At first glance, CAMDS is far more complex than necessary, but this complexity is in keeping with the flexibility demanded of a research facility that experiences the typically random growth of new operations. The facility has provided necessary design information for JACADS (indeed, much equipment will be duplicated) and for the expedited M55/M23 disposal program. It will continue to provide necessary design data (for example, how much torque can safely be applied to extract a fuze?) and prototype operating experience. CAMDS may provide sufficient capacity for a gradual disposal of some munitions, but it is not suitable for disposal of the entire Tooele stockpile.

INDUSTRIAL TECHNIQUES AND RESEARCH

In its search for available technology or promising approaches for destroying chemical munitions, the panel's staff contacted the Environmental Protection Agency, the Hazardous Waste Treatment Council, the Hazardous Material Control Research Institute, the American

*An assembly technique of highly questionable safety, apparently not recorded at the time of manufacture or in munition records.

Chemical Society, and the Chemical Manufacturers Association. These contacts were followed by interviews with corporate representatives and individuals working in the field. From these and other discussions, it became apparent that in dealing with hazardous wastes industry first attempts to find a way of using those wastes as a resource. If that is not possible, corporations will search for some means of chemical neutralization. Where those options are unavailable, they will either burn the material or, in some cases, consider deep burial.

In general, industrial experts favored thermal destruction for chemical agents. Possible methods included the use of rotary-kiln furnaces, fluidized-bed incinerators, high-temperature pyrolysis, microwave heating, and decomposition by exposure to superheated water. Most of these thermal technologies are already being used for hazardous waste disposal. A few, however, are still in the experimental phase. Of these methods, high-temperature pyrolysis was the only one that had not already been considered by USATHAMA. It might have some potential for use in a mobile system for destroying liquid agents stored in bulk containers (see Chapter 14).

13

Planned Disposal Programs

The Army's current plans include the disposal of BZ at Pine Bluff Arsenal, an expedited M55 rocket/M23 land mine disposal program, and the disposal of obsolete and unserviceable stocks on Johnston Atoll.

BZ DISPOSAL

The Army's entire stock of the incapacitating agent BZ is located at Pine Bluff Arsenal. The inventory includes bulk agent (a white crystalline powder), an agent-pyrotechnic mix loaded into two kinds of cluster bombs, BZ-contaminated liquid residues from earlier manufacturing operations, and residue from a 1971 fire in a storage igloo (USATHAMA, 1982).

Disposal of BZ was assigned to the U.S. Army Toxic and Hazardous Materials Agency (USATHAMA) in 1976. Research completed in 1981 indicated that incineration was the best method (USATHAMA, 1982). Design studies recommended a disposal facility for BZ that would be similar in many respects to facilities needed for disposing of other chemical munitions stored at Pine Bluff.

Accordingly, the facility is to be converted to dispose of M55 rockets and M23 land mines after the BZ has been destroyed. Later, it might again be converted to dispose of mustard stored in 1-ton containers. Construction of the BZ facility is scheduled to start in 1984 with disposal operations occurring in 1987-1988.

Munitions containing BZ are to be made safe for handling by soaking them in water (the pyrotechnic mixture is an extreme fire hazard). Afterward, the various munition clusters are to be manually disassembled into individual submunitions and then detoxified in a deactivation furnace (the same type of furnace used for explosives at CAMDS). This furnace should also be suitable for rockets and land mines. Liquid residues are to be detoxified in incinerators designed for burning liquids. Metal parts are to be decontaminated by heat treatment. The processes should produce no liquid effluent, so that no gaseous emission controls for sulfur or nitrous oxides or other pollutants should be required (Balachandran and Roux, 1982; USATHAMA, 1982a).

EXPEDITED M55 ROCKET/M23 LAND MINE PROGRAM

M55 rockets are stored at five depots in the continental United States and on Johnston Atoll. Filled with VX or GB in the 1960s, these thin-skinned, aluminum munitions are deteriorating more rapidly than other munitions, resulting in increased maintenance costs (USATHAMA, 1982a). An expedited M55 disposal program was authorized and funded in March 1983 (Roux, 1984). The two kinds of munitions might be processed by similar means since both are thin-skinned vessels and in neither case can the explosive elements be removed without releasing the agent (USATHAMA, 1982b).

The expedited program is to use CAMDS technology and advances in that technology as available. Primarily, this includes the rocket shear machine (or a land mine punch), the deactivation furnace, and improved air pollution control equipment consisting of a downstream afterburner, a spray-dryer, scrubber, and baghouse. CAMDS technology is described in Chapter 12. Often used for industrial purposes, the new, dry gas scrubber system being tested, is simpler than the wet scrubbers used at CAMDS and is expected to have lower operating costs (Roux, 1984). The wet scrubber does not require a baghouse.

One obvious question is whether the M55 disposal program should be delayed pending development of a cryogenic fracturing technique (see Chapter 14) to replace the rocket shearing technique. The answer is "no." First, the shearing machine has proven to be safe, reliable, and far simpler than a cryogenic system (Seat, 1984). Second, the major safety advantage attributed to cryogenic methods (MITRE, 1983c), that of near-zero vapor pressure of the frozen agent, is illusory. Frozen fragments of agent would be scattered widely, and surrounding equipment and surfaces would soon become covered with melted agent.* Third, the aluminum alloy (6061) used in M55 rockets is not embrittled at cryogenic temperatures (General Atomic, 1982; Van Horn, 1967). Indeed, this alloy is commonly used for cryogenic equipment.

The expedited program has progressed through many planning steps and applications have been made for necessary environmental approvals (see Chapter 8 and Appendix E for a comprehensive list of applicable laws and regulations). Design specifications have been completed and a contract has been awarded to design the process equipment. A 1- to 3-year operating schedule (1989-91) is anticipated (Roux, 1984). Any disposal equipment remaining after the rockets and land mines have been destroyed would be used to dispose of other munitions and agents at each depot.

---

*Unless, of course, they are also held at cryogenic temperatures, but that would entail design complications unlikely to improve safety or reliability.

JOHNSTON ATOLL STOCKS

Quantities of all items in the U.S. chemical weapons arsenal (except BZ) are stored on Johnston Atoll. Many have begun to deteriorate. Currently, 40 percent of the Johnston Atoll stockpile is designated as obsolete and available for disposal (USATHAMA, 1982a).

An "accelerated" project has been established (USATHAMA, 1982a) to design and construct the Johnston Atoll Chemical Agent Disposal System (JACADS). This facility is to use technology developed and demonstrated by CAMDS, together with improvements that arise as planning and construction progress. While the facility will be designed to dispose of the entire Johnston Atoll stockpile, to date USATHAMA has been authorized to procure only that equipment needed for M55 rockets and M23 land mines (Whelan, 1983b).

JACADS facility design is now well along and a contract has been let for initial equipment design. The schedule calls for facility construction to start in 1985 and extend through 1987. Equipment is likewise to be procured and installed between 1985 and 1987. Training is to start in 1988 and disposal operations in 1989. If approved, additional equipment could be acquired by 1991, with disposal of the remaining stocks between 1991 and 1993 (Whelan, 1983b).

JACADS is a direct descendant of the thermal destruction technology developed at CAMDS. Improvements in materials handling (notably the use of rotary, multipurpose processing machines) should give JACADS a throughput rate about twice that of CAMDS. Gaining access to the agent and separating the explosives from the agent will be done mechanically. Recent tests (Brankowitz, 1983), which indicated that distilled mustard agents were in a liquid (i.e., drainable) state, might permit processes that do not require the relatively slow agent volatilization step previously assumed (see Chapter 14).

The thermal destruction equipment planned for JACADS is identical to that at CAMDS (see Chapter 12). The explosives deactivation system will consist of a 30-feet long by 4-feet in diameter cast steel rotary kiln, a cyclone, and a slagging afterburner.

The three-chamber, roller hearth furnace used to decontaminate metal parts from drained munitions is expected to have the following peak hourly rates: 105 mm projectiles - 181; 155 mm projectiles - 90; 8-in. projectiles - 47, 500-lb. bombs - 2.4; 750-lb. bombs - 2.5; 1-ton containers - 1.66; and 4.2-in. mortars - 180 (JACADS, undated).

Fumes and vapors from the furnace's volatilization chamber are to be destroyed in a primary burner, followed by an afterburner. A separate incinerator is to be used for destroying drained agents and decontamination solutions. A dual-chamber design should permit incinerating a maximum of 700 pounds per hour of VX, 1,050 pounds per hour of GB, 1,330 pounds per hour of mustard, and 2,000 pounds per hour of decontamination solution.

Dunnage, both clean and contaminated, is to be destroyed in a two-chamber incinerator. Solid waste is to be fed manually through a

ram feeder into the first chamber. Fuel oil is to be used to start and maintain combustion.

The JACADS design includes pollution control systems to treat the effluent from all combustion chambers. Pollutants of concern include sulfur dioxide, hydrochloric acid, hydrofluoric acid, and phosphorous pentoxide. The systems include a quench tower, variable throat Venturi scrubber, packed-bed wet scrubber tower, and necessary pumps and blowers (JACADS, undated). Scrubber liquors are dried to reclaim salts in dry form for storage. Drum dryers have been used in CAMDS, but spray dryers are being considered for future facilities (Shatto, 1983).

Munitions are to be prepared by mechanical systems tested at CAMDS, but designed for higher throughput. Munitions containing explosives are to be processed in two separate containment rooms. Each of the two preparation lines should be capable of higher throughput than the deactivation furnace, so each could, on average, operate at half capacity or less. In view of the undesirability of a furnace interruption for lack of feed and the relatively low cost of a preparation line, this redundancy is justified. Overcapacity with existing preparation equipment suggests that, although simpler and more reliable equipment is always desirable, there is no need to delay the disposal of M55 rockets pending its development.

While the JACADS design provides for higher throughput than that of CAMDS, there is still considerable room for refinement and simplification. As an illustration, consider the way that JACADS handles projectiles containing explosives. The projectiles are to be unpacked manually and placed individually on a conveyor that carries them into the containment room. The projectiles are then transferred individually from the conveyor to a rotary indexing machine that removes their fuzes or nose plugs, supplementary charges, and bursters. Next, they are transferred to a second conveyor and carried out of the containment room to be individually transferred by a multiposition loader to a tray to be forwarded by a batch transfer system.

Empty trays are to be delivered by forklift truck. When loaded, each tray is to be conveyed and transferred to a charge car for transfer to the "multipurpose demilitarization machine." Projectiles are then removed from the tray by a pick-and-place robot and loaded individually into the machine. On that machine, the burster well is to be removed, agent pumped out, the burster well replaced, removed again, deformed to prevent sealing, and replaced again. The empty projectiles are then removed from the machine, transferred further, and eventually carried, in batches again, into the metal parts furnace in a heavy stainless steel tray. The complexity of this particular progression is evident. In part, it provides buffering to accommodate temporary shut-downs of the many and varied pieces of equipment.

The panel, in its brief review of this system, is certainly in no position to criticize authoritatively the specific design details. However, it does seem possible, if not likely, that excessive

complexity might actually introduce more interruption than it alleviates. Therefore, every attempt should be made to simplify the system design for later disposal programs.

It might be particularly fruitful to explore systems that further exploit drainage and subsequent burning of agents in a simple liquids incinerator, and designs that more nearly approximate steady flow of all material streams (including solids). The rocket disposal schedule provides time for such rethinking, and CAMDS, as intended, provides a development site where exploration of such modifications would not prejudice a prompt disposal program for Johnston Atoll.

The rocket disposal program itself would benefit from simplification. An expedited search should be undertaken for design simplifications in that program prior to final equipment specifications. However, the program should not be delayed awaiting any particular new concept development.

BASELINE TECHNOLOGY

Establishing a Benchmark

As noted in Chapters 2 and 10, the Army is actively engaged in the exploration for and the development of advanced disposal technologies. The aim is to substantially reduce the estimated costs for disposing of the stocks that remain after all rockets, land mines, and BZ have been destroyed. An important first step, however, is to carefully assess the cost and time that would be required if current or "baseline" technology were to be used. Such an analysis has been completed (Scott, 1984b) and a benchmark has been established against which alternative technologies may now be compared.

Baseline technology is essentially that developed at Tooele for CAMDS, but the final selection of its components was delayed until preliminary design work on JACADS could provide a basis for assessing proven technology. Baseline technology available in 1984 would be used to dispose of the entire stockpile should the Army need to proceed immediately. For example, recent calculations show that baseline technology could reduce the total cost of disposal from an early estimate of $4 billion (Ambrose, 1982), to perhaps $1.5 billion (Hidalgo, 1983). Cost requirements to be met by worthwhile new technology, therefore, seem more stringent than originally perceived.

Like CAMDS and JACADS, baseline technology punches and disassembles the munitions mechanically to gain access to agent and explosives. Likewise, it uses incinerators to destroy the agent and explosives. These various methods at the "front end" of the process are summarized in Table 9; thermal destruction elements are listed in Table 8, where the deactivation furnace is a rotary kiln and the metal parts furnace is a large three-chamber hearth furnace. Other key pieces of baseline equipment include a dunnage incinerator, explosive containment chambers, various special mechanical devices to disassemble, punch,

and manipulate items as necessary, and the necessary air pollution control systems.

Cost Estimates

In the most recent study (Scott, 1984b), cost estimates were based on each depot's actual stockpile. For each site, the postulated disposal facility consisted only of those elements from the baseline repertory required by the items at that particular depot. Elements were not subdivided; i.e., selection of a furnace meant selection of the baseline size as well as type. Where appropriate, the study accounted for savings made possible by conversion and use of components that would be remaining after completion of the expedited M55/M23 program. All anticipated costs were included, such as construction, support facilities, security, training, start-up, changeover between munitions, shut-down, clean-up, and so on.

The cost analysis sought to find a limited optimum arrangement at each site--limited in the sense that only integer numbers of baseline technology elements were used. The best selection (that is, minimum total disposal cost) might be expected to fall between high-speed operations having very high capital costs but low (short duration) operating labor costs, on the one hand, and lower speed operations with lower capital costs but higher operating labor costs on the other. These are shown schematically in Figure 9.

Assuming that appropriately selected base line facilities were constructed at each site, the total cost for destroying all stocks that would remain in the continental United States and on Johnston Atoll after the rocket, land mine and BZ programs had been completed came to more than $1 billion. If, instead, all remaining munitions and agents were transported either to the Tooele or Anniston depots (whichever was closer), then the disposal cost, using baseline technology, was estimated to be $690 million, plus transportation costs. Transportation costs were not estimated, but would probably be substantial. In 1979, for example, the Army spent about $6 million to move some 900 items from the Rocky Mountain Arsenal to Tooele (Shatto, 1983). The destruction of rockets and land mines is expected to cost approximately $262 million (Roux, 1984). BZ will add another $93 million (Whelan, 1984).

Thus, according to these most recent Army estimates, the total cost for destruction of all chemical weapon and agents in the continental United States and on Johnston Atoll, using today's baseline technology, is $1.4 billion, assuming no movement between depots. If, on the other hand, the rockets and BZ were destroyed at their current sites, but remaining stocks only at Tooele and Anniston as well as on Johnston Atoll, then the total cost would be slightly more than $1 billion plus transportation costs.

One rather surprising result of this analysis was that for all but one site, the best selection appeared to be at lower than available capacity; that is, the baseline technology equipment is too large for

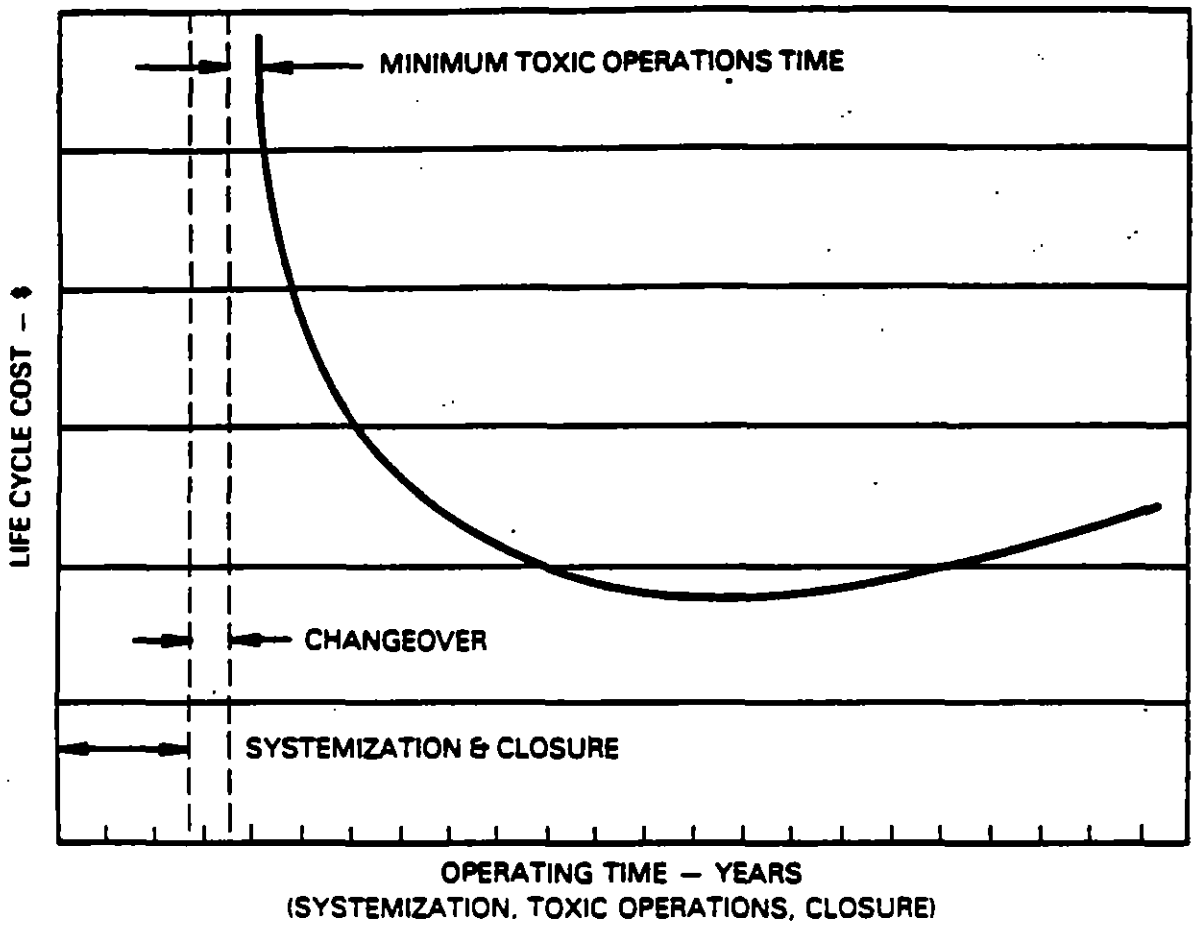

FIGURE 9 Typical disposal cost versus time.
Source: Scott 1984b.

all but one site (see the example in Figure 10).* Because of its rather large size (necessitated by the baseline technology for disposal and decontamination of 1-ton containers) and the fact that it is the costliest single piece of equipment, the large metal parts furnace appears to be a major factor in this result (Scott, 1984b).

The Army has already used these results in seeking a better match between the system to be selected and actual stockpile requirements. The panel believes that this study was done well in terms of the selection of current technology for the baseline, in terms of its thoroughness, and in terms of learning from and acting upon the findings.

One final word seems appropriate: in this and other chapters of the report, there is frequent reference to cost effectiveness as a major criterion for choice. Considering all of the potential costs of a mishap, designs that are simpler and more foolproof should be preferred even if their initial cost is higher.

---

*JACADS was excluded from this study because it essentially is baseline technology. Further, it will be operating prior to completion of the M55/M23 program.

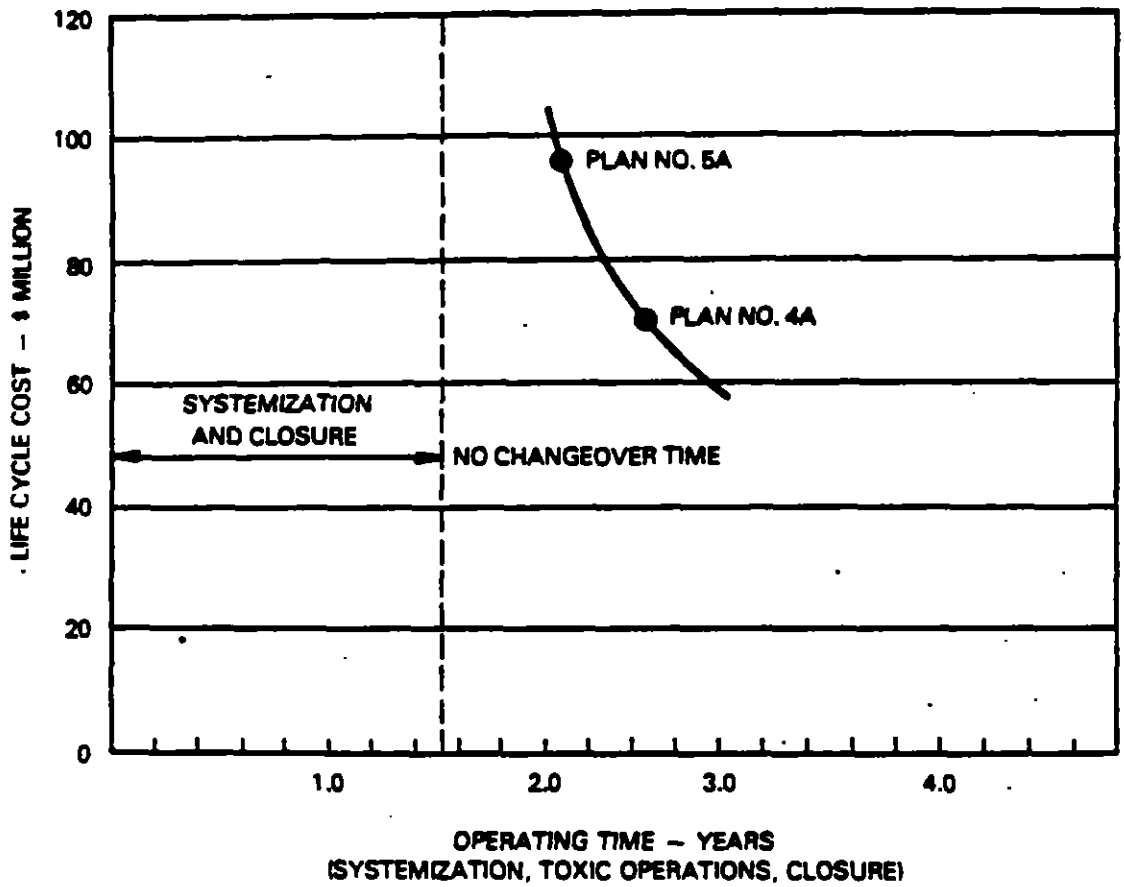

FIGURE 10 Cost versus operating time for disposal of stocks at Newport Depot.
Source: Scott 1984b.

14

Options for Improved Technology

Thermal processes hold the greatest promise for reliably and economically destroying chemical agents in munitions and bulk storage containers (see Chapter 10). The experience gained at the Chemical Agent Munitions Disposal System (CAMDS) can now be applied to production facilities such as those planned for Johnston Atoll.

Still, substantial improvements may be made in later systems. The Army has recognized this opportunity and considered a great many options for improved designs. The choices among these various options, however, will not be based solely on technical merit. Three constraints that exert a powerful influence on the selection are:

1. The overwhelming importance of safety in all operations (see Chapter 15).
2. The terminal nature of the disposal effort—the Army is preparing to destroy a finite quantity of material, not to establish a new industry.
3. The need to expedite disposal of M55 rockets and BZ.

These factors militate against substantial departures from proven technology. The first two discourage concepts that require long or costly development or that can be meaningfully tested only at full scale. The third, which will establish functional facilities at some sites, gives incineration techniques, particularly the use of rotary kilns, a substantial advantage for any subsequent disposal operations.

Despite such an inclination toward proven technology, an extensive search for substantially improved equipment is well justified. It is important to be as sure as reasonably possible that the best process, in terms of safety and cost, has been selected from all known candidates.

This chapter examines some of the more promising approaches and suggests a few simplifications. No attempt is made to catalogue and critique all of the concepts treated in detail by Army studies.

Figure 11, which was developed by the panel, illustrates some of the many possible options for thermal processing. With so many options available, this particular diagram is not unique, and one can readily identify hybrid systems that fall outside the illustrated functions. Choices among basic approaches are determined by overall constraints and/or interactions among the system components.

In general, the disposal process begins with a mixture of items, of widely various sizes and container strengths, some including explosives, with various types of packing. Despite the apparent intervening maze, there are really only two end points to the many paths in terms of basic influence on process steps: the large, essentially one-shot batch operation using massive destruction techniques (e.g., nuclear explosion) and the relatively continuous operation of more conventional destruction devices (thermal devices in this case). The former are necessarily unsteady, pulse-type operations; the latter are preferably steady flow. By anticipating the end-point, steady-flow destruction device, designers of "conventional" disposal facilities can do much to keep the entire process simple.

The variety of stored materials, along with concern for the four separate material streams (agent, explosives, metal parts, and dunnage), complicates the selection of preparation steps. Massive destruction techniques like nuclear explosions simply avoid these complications by eliminating preparation altogether. This is, in fact, the major potential advantage of these techniques.

As explained below, the preference for steady feed to an incinerator can influence the selection of many preparation steps. Local batch preparation steps (e.g., pallet-size processing illustrated in Figure 11) might appear economical, but they are not inherently so because of the importance of steady material flow.

THERMAL PROCESS OPTIONS

USATHAMA contractors (Dustin et al., 1983; Mink et al., 1983; MITRE, 1983d; Schultz, et al., 1983) have studied various thermal processes in an effort to improve system safety, process performance, reliability, and economics over that achieved by CAMDS. Other contractors (MITRE, 1983b; Moynihan et al., 1983) have also evaluated novel concepts for the disposal of obsolete chemical wastes.

It is beyond the scope of this report to provide a comprehensive review of the advantages and disadvantages of the many technologies studied. However, the following paragraphs briefly review the conventional and novel thermal alternatives that show promise for enhancing or replacing the CAMDS baseline technology. They also consider the effects that current high-priority Army programs might have on the selection of alternatives.

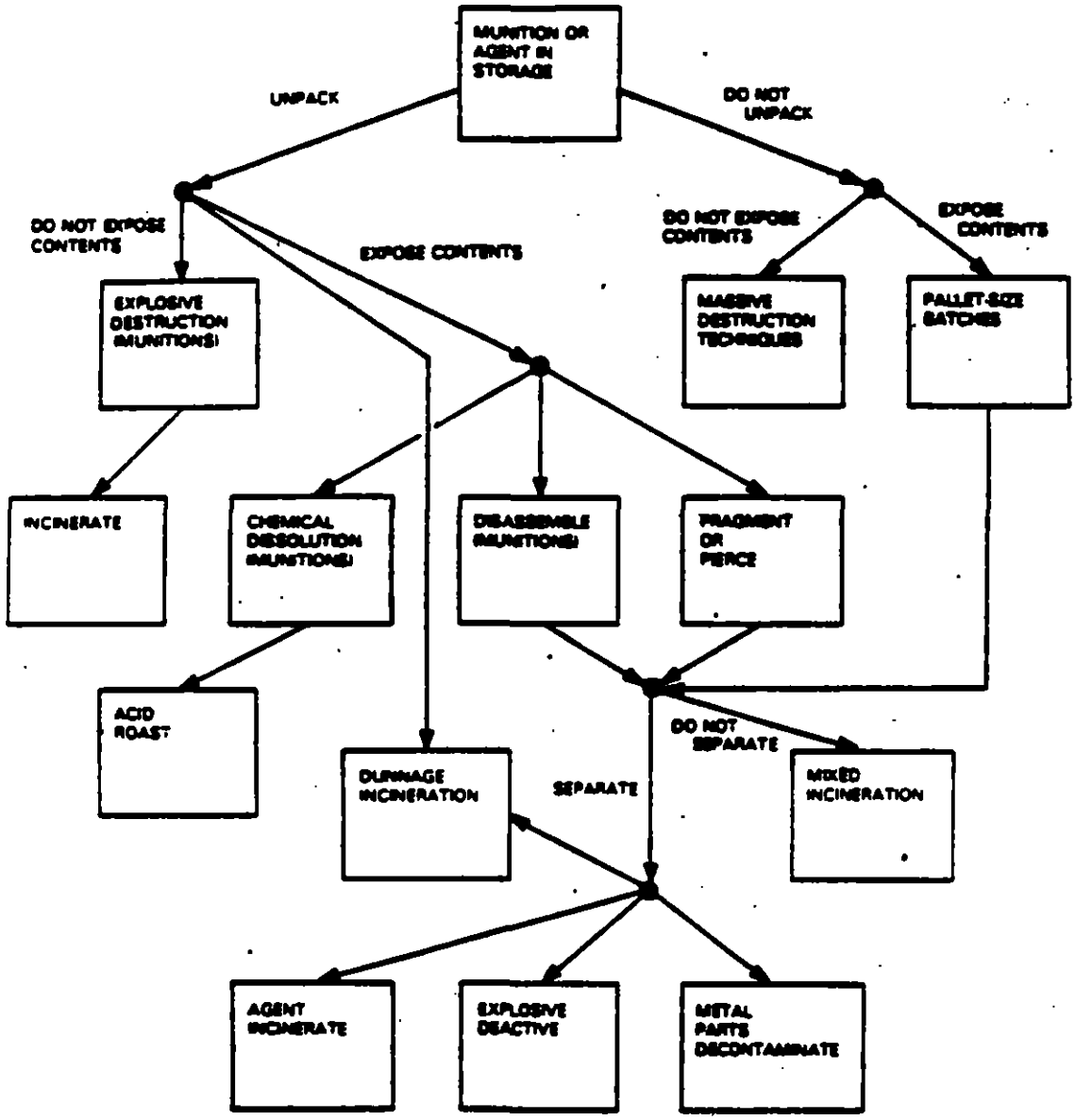

FIGURE 11 General disposal options.

More than 120 individual or hybrid thermal concepts were identified and considered by three USATHAMA contractors who evaluated alternative processes using conventional thermal means for disposing of obsolete chemical munitions. Approximately 40 novel thermal concepts were also evaluated. Table 10 summarizes some of the criteria used to evaluate these concepts.

Both the conventional thermal processes and the novel processes recommended for additional study by the contractors are summarized in Table 11.

The novel concepts included biological processes, chemical neutralization, use of natural geological forces, nuclear explosions, and long-term storage. In the end, however, all novel concepts recommended by USATHAMA contractors for future study were based on thermal processes. Appendix F provides an overview of these conventional thermal processes and the one most promising novel process. Appendix H summarizes their relative costs.

One additional thermal process has some probability of technological and/or economical success. This process uses very high temperature pyrolysis to destroy gravity-fed liquids (J. M. Huber, undated; Lee and Lewis, 1983).

Incinerator systems designed for steady-flow operation are more readily controlled than those designed for batch operations. Additionally, the incinerator, as well as the required downstream air pollution control systems, can be smaller and less costly for steady state than batch operations.

The safety and operation of an incinerator are greatly improved if (a) the fuzes are separated from the explosives and (b) the explosives and propellants are separated into relatively small and unconstrained pieces. Additionally, for best operation, the agent should be readily accessible and the metal parts should not be too large. Attention to such considerations can provide steadier flow conditions, reduce wear on the components, enable the use of smaller and less costly furnaces, and minimize the risk of explosions.

Thus, the complexity and cost of incinerator systems generally decrease as the degree of munition preprocessing increases. Therefore, incinerator design needs to consider both the pre-processing and destruction portions of the process. Technological opportunities associated with front-end preparation are discussed below.

PREPARATION OPTIONS

Figure 11 shows several preparation options among the paths culminating in a steady-flow thermal destruction. Tracing the options used in CAMDS and JACADS provides a useful example (see Figure 12). Artillery projectiles are unpacked, the contents are exposed by disassembly, the burster tubes are sliced, the material streams are

TABLE 10 Selected Criteria for Evaluating Alternative Thermal Concepts for the Disposal of the Obsolete Chemical Munition and Agent Stockpile

Safety
Life-Cycle Cost
Probability of Development Within 5 Years
Degree of Technological Risk
Scalability of the Process from Laboratory to Production Rates
Availability, Reliability, and Maintainability of the System
Ease of Operation
Energy Requirements and Sources
Material Compatibility Problems
Preprocessing Requirements
Posttreatment Requirements

Source: Shatto, 1983

TABLE 11 Conventional Thermal Disposal Processes and Novel Processes Recommended by Contractors in USATHAMA's Technology Development Program

CONVENTIONAL THERMAL PROCESS	NOVEL PROCESS
Acid Roaster	In-Shell Combustion
Thermal Tower	Steam Pyrolysis
Rotary Kiln	Drain-in-Furnace
Rotary Kiln/Molten Salt Hybrid	Underground Combustion or Hydrolysis
Heated Chamber Rotary Kiln	
Electric Rotary Pyrolyzer and Kiln	
Fluidized Bed	
Pusher Hearth	
Molten Metal	
Pyrolysis/Molten Salt	

Source: Shatto, 1983.

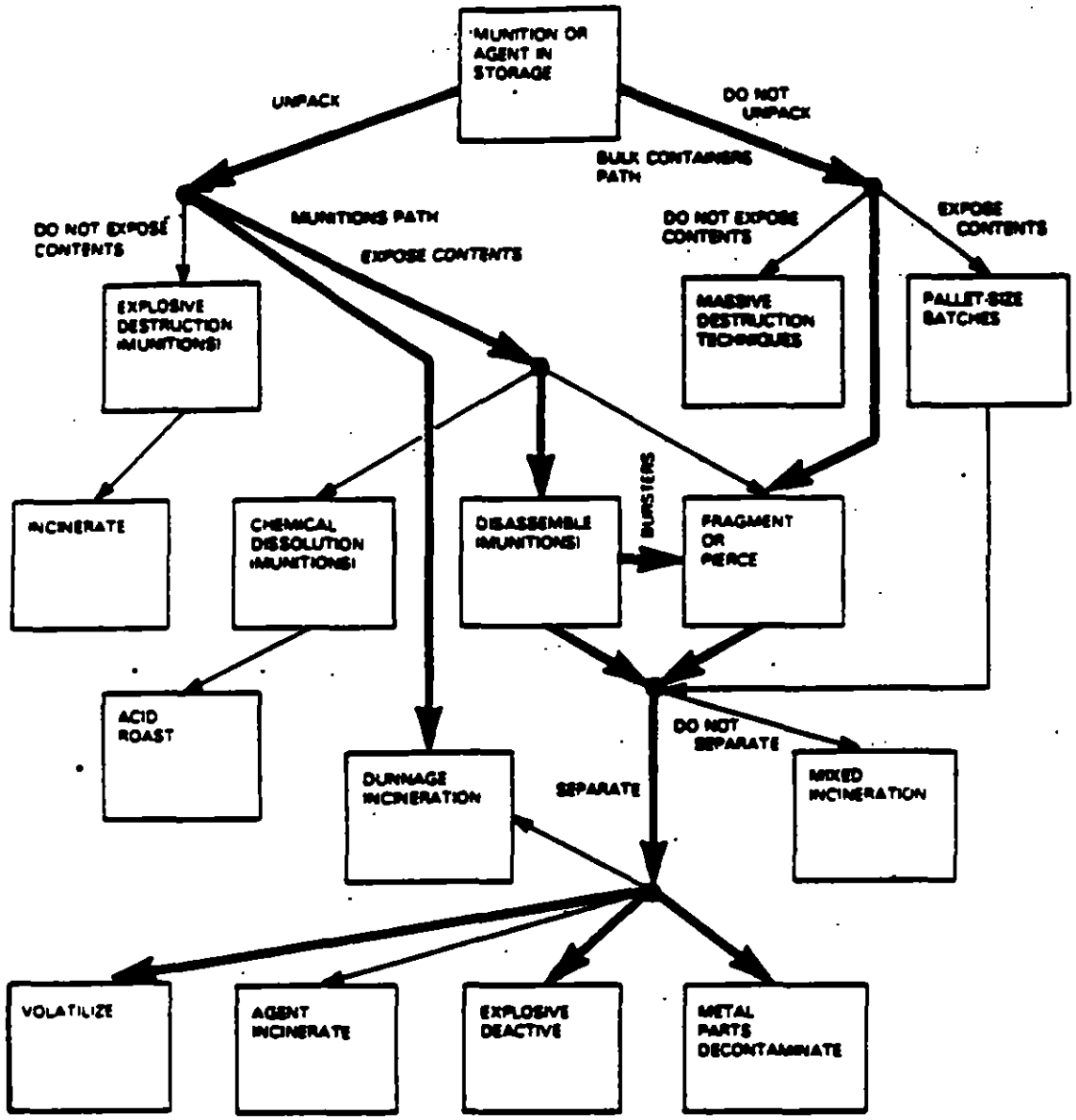

FIGURE 12 Preparation options for steady thermal destruction.

separated, the agent is volatilized from the projectile bodies and incinerated in a vapor burner, and the other material streams are thermally treated in three separate furnaces.

Rockets are removed from pallets (but not from their launch tubes), pierced and drained of agent, and sliced into five pieces. The agent and dunnage are incinerated separately. Solid pieces are processed first through the explosives deactivation furnace and then decontaminated in a heated conveyor.

One-ton containers, which are not packed, are sent through a three-chamber hearth furnace.* They are pierced in the first chamber. The agent is volatilized in the second chamber and is passed out to vapor fume burner. The container itself is thermally decontaminated in the third chamber.

The overall complexity of these processes is obvious. This has motivated the search for simpler technology. All four material streams (agent, explosives, metal parts, and dunnage) can be improved, but the best opportunities seem to lie in the areas of gaining access to the agent and explosives and in decontaminating metal parts.

Taking CAMDS and JACADS technology as the working base, improvements should aim to simplify the process by eliminating some of the operations. Local batch processing, for example, seeks to avoid the complexity of handling many individual items. Viewed as an individual step, unpacking is obviously more complex and costly than not unpacking. Similarly, processing an entire pallet seems less costly than handling individual items.

For these reasons, the Army's Technology Development Program has explored various batch handling concepts that might offer substantial savings over the one-at-a-time techniques now used. Because it is best to have a steady flow of materials at the point of combustion, however, local batch processing may not result in overall simplification or improvement. Further, batch processing may be less safe. A mishap with a batch could be larger than one with an individual item; and batch processing inherently provides less control over individual items.**

The following sections discuss a range of simplified operations, arranged roughly in order of increasing departure from current technology.

Improved Disassembly Systems

The current practice of mechanical disassembly should not be discounted too quickly in the search for improved technology for several reasons:

---

*This same furnace handles batches of projectiles for volatilization and decontamination.

**Steady flow to an end processor is, of course, not incompatible with upstream batch processing; one has only to accumulate batch output and meter outflow as desired.

- It works.
- It is not likely to determine the operating rate of economically balanced systems.
- It is a necessary precursor to those downstream processes that can deal with only nonexplosive items.
- When applied together with existing nonexplosive stocks, partial disassembly is well suited to uniform downstream destruction operations.

The JACADS design already includes substantial improvements over that at CAMDS. For example, simple shears are to replace circular saws for cutting M55 rockets. Similarly, linear conveyors are to be replaced by carousel-type machines more suited to rapid and precise operation (Parsons, 1983d; Parsons, Undated; Seat, 1984; USATHAMA, 1983a). Nevertheless, further improvements over current JACADS designs are both possible and desirable to achieve uninterrupted operation and to avoid difficult and hazardous maintenance work in toxic areas.

Systems to Avoid Sensitivity to Munition Variations

Munition disassembly, though feasible, presents some difficulties, particularly in achieving high throughput. Its many steps are all mechanically complex and subject associated machinery to wear and malfunction. Moreover, individual munitions vary and are sometimes unpredictable. For example, burster wells are occasionally welded-in--a feature that defeats the mechanical system designed to extract this normally press-fit component. Other problems include threaded connections that are difficult to unscrew and variations in assembly details that were not recorded during manufacture. Some, although not all, of these problems can be ameliorated, but they do add complexity and interrupt steady operation.

Even without munitions irregularities, the expected variations demand a significant variety of mechanical operations and disassembly devices. Many methods to expose munition contents have been explored in a search for a simple, reliable, and safe method that is insensitive to munition details. Pierce, saw, punch, drill, machine, and shear concepts have been examined (Battelle, 1982a; Carney, 1982; Davison, 1984; General Atomic, 1982; Houseman, 1984; Moynihan et al., 1983). DATS, for example, uses a drill (Masson and Holmer, 1978), and M55 rockets can be sheared open (Seat, 1984). Attempts to shear the thick-skinned, steel artillery projectiles, however, have not been encouraging, as might be expected (General Atomic, 1982; Carney, 1982).

Cryogenic fracturing is the most encouraging munition-insensitive entry system now foreseen. It has been demonstrated in preliminary tests on 155-mm projectiles (General Atomic, 1982). In addition to effectively fragmenting the shells into numerous pieces, the process

was presumed to enhance safety through a substantial reduction in vapor pressure of frozen agent and possibly some reduction in the risk of explosion (General Atomic, 1982; MITRE, 1983c).*

If cryogenic fracturing could be successfully applied to steel-walled munitions containing both fuzes and bursters, it would offer even greater advantages over room-temperature processes.** The process has successfully fractured 155-mm projectiles containing bursters and simulated agent, but it has not yet been demonstrated on fuzed munitions (General Atomic, 1982).

As now envisaged (Davison, 1984), cryogenic fracturing involves unpacking individual projectiles, collecting them into batches for immersion in a liquid nitrogen bath, extracting individual projectiles from the bath by a pick-and-place robot that must reach through an air lock, and placing each projectile sequentially in an hydraulic press for fracture. Since projectiles are handled individually at the beginning and end of this process, the intermediate batch cooling seems inappropriate. The use of a relatively sophisticated and fragile robot adjacent to the fracturing press, where detonation could occur, also seems inappropriate. The process seems attractive and certainly worthy of continued development, but practical implementation remains to be developed. A simpler concept is suggested below (Figures 15 and 16).

Other concepts have been proposed to avoid sensitivity to munition details, including chemical dissolution and detonation of the projectiles' own explosive. These concepts do not warrant continued effort (see Chapter 10).

Systems to Avoid Unpacking

Several approaches have been pursued that avoid unpacking pallets. These include explosive piercing using shaped charges (Schultz et al., 1983), detonation in a "thermal tower" (Schultz et al., 1983), and cryogenic fracturing of entire pallets. The latter concept was mentioned briefly by one contractor, but not elaborated. In that case, batch cooling would be appropriate. Metered feed of the fractured product could provide a steady feed to an incinerator from the batch preparation. However, the desired steady feed would seem to negate the potential economy of pallet crushing in view of its greater risk.

---

*This assumption might not be valid because agent fragments would be scattered during brittle fracture and the entire surrounding area (unless refrigerated) would soon become wet with melted agent.

**Room-temperature shearing may open burster tubes, but it is also possible that ductile shearing will seal the fragments, and such violent deformation of a heavy-walled projectile might detonate the explosives.

Bulk Handling Systems

Concern with the relatively hazardous and costly task of destroying agents in munitions that contain explosives has largely overshadowed the problems of handling agents in bulk containers (i.e., 1-ton containers, bombs, and spray tanks). Punching such containers and draining their contents seems simple enough. In fact, even the heavy-walled, 1-ton container can be routinely punched by a simple mechanical device in the first chamber of the decontamination furnace for metal parts at CAMDS (USATHAMA, 1983a); however, the situation is, or at least appears to be, more complex.

Because some agents, mustard in particular, have solidified over the years, CAMDS was designed to volatilize the agent from punched containers and opened projectiles in the second chamber of the three-chambered metal parts decontamination furnace. Lacking better information about the stockpile details, this same furnace has been specified for JACADS and included in economic evaluations of baseline technology at all storage depots (Scott, 1984b; Shatto, 1984a).

Because the CAMDS furnace was designed to accommodate 1-ton containers and equivalent batches of opened projectiles, it is large and expensive. In fact, it is the most expensive single item in the entire baseline economic study (Scott, 1984b). Furthermore, the entire downstream air pollution control system must be sized for the peak load from this batch-type volatilization system. As a result, this single, oversize, costly furnace is far from the best for all but one of the eight depots in the United States (Scott, 1984b).

As an alternative, the Army is studying an electrically heated volatilization furnace system (Schultz et al., 1983). This design would incorporate several cylindrical furnaces whose alloy shells would be surrounded and heated by induction coils. After a bulk container has been pierced, it would be sealed in one of the furnaces and heated in an atmosphere containing less than 2 percent oxygen to prevent combustion. Vaporized agent is routed to a separate incinerator where it is destroyed. Wall temperatures are adjusted to maintain the vaporization rate as constant as possible. The temperature of the empty container is then raised to at least 538°C (100°F) for 15 minutes in an air atmosphere to burn out or decompose any agent residue and, thus, to decontaminate the metal parts. The processing cycles of the multiple furnaces are to be staggered so that the vapor incinerator receives an approximately constant flow of agent vapor, but the process seems more complex than necessary.

A recent Army study determined that all existing agents can be drained from their containers, thus eliminating the need for the slow volatilization process (Brankowitz, 1983). As a result, processing rates for drained agent might be roughly double those previously estimated for most items, with an attendant potential for cost reduction.

Agent drainage offers other operating advantages as well:

- Volatilization from a large container in a massive hot furnace could not be stopped rapidly should disturbances require a shut down.
- Liquid incineration could be controlled easily or even shut off.
- A stored and pumpable liquid supply offers the opportunity to maintain desired incinerator conditions in the face of highly variable loading from other sources.
- A controllable supply of agent enhances the prospect of using the material as a fuel for heating needs, such as metal decontamination.

In addition to reduced operating time, there is also a potential for substantial savings in capital equipment costs if the large, three-chamber hearth furnace can be eliminated at most depots. The consequences and potential for improvement, however, involve interactions between the requirements for destroying bulk agent and decontaminating the containers, as discussed below.

Decontaminating metal parts is simple chemistry--just heat them to more than 538°C (1,000°F) for at least 15 minutes. Mechanically, however, the procedure becomes complex if the metal parts are large. Rotary kilns have been selected for small metal-parts decontamination because they offer a proven, simple means to transport solids through the hot zone. As the parts increase in size, however, the durability of the kiln becomes a matter of concern. Thus, it is doubtful that a conventional rotary kiln could transport very large, cylindrical parts, such as 1-ton containers.

The high cost of a CAMDS-type, three-stage hearth furnace prompted pursuit of the induction-heated, volatilization system described earlier, but that system does not exploit possibilities for draining the agent.

SIMPLIFIED CONFIGURATIONS

In the course of its deliberations, the panel generated no substantially new approaches for disposal of chemical agents and munitions. In four areas, however, it suggests design improvements for consideration by the Army. The first two are merely simplifications of single machines; the last ones provide different design approaches that appear better suited to achieving steady-state system operations.

Simplified Burster-Well Extraction

With CAMDS technology, one gains access to the agent in artillery projectiles by pulling the pressed-in burster well from the projectile body. The empty burster well is gripped internally by an expanding collet. The smooth internal surface and small diameter of the burster well make it difficult to design a robust collet. At least one collet has failed in operations at Tooele. The critical nature of this operation and the hazards of maintenance in such a toxic environment call for a simpler and more reliable method.

One alternative is to heat the projectile and let the vapor pressure of the agent drive out the burster well. This already has been demonstrated, but the discharge velocity of the well was judged to be too high. Figure 13 illustrates a configuration believed to be more tolerant of a high discharge velocity. Furthermore, proper location and timing of the heat might reduce this velocity.

In this scheme, the inverted projectile would be held over a pool of agent and inductively heated near its midsection to vaporize the internal agent. After a suitable time, the projectile might then be heated rapidly adjacent to the press fit, causing relative expansion of the casing to ease the interference fit, thus releasing the burster well. The well and agent would both be expelled downward into the agent pool, where the well could be decelerated without damage to adjacent solid surfaces. Like the current mechanical system, this system would also be defeated by a welded-in burster well.

For processing small quantities of munitions, it might be economical to continue induction heating (though not while dwelling over the agent pool) for decontamination of the empty projectile.

Simplified M55 Rocket Shear

The rocket shear machine designed for JACADS (Parsons, 1983a, Parsons, 1983b) is a significant simplification over that of the early CAMDS facility (USATHAMA, 1983a), but further simplification is both possible and desirable. Figure 14 illustrates a gravity feed shear that would use only one moving part.

A combined shear and baffle would reciprocate through a fixed stroke, driven by a hydraulic cylinder or perhaps a crank. The rocket, in its firing tube, would be fed by gravity to be cut into segments of fixed length. Figure 16 also illustrates the desired shearing locations that would produce four segments of about 19 1/4 inches length and one, containing the fuse, of about 4 11/16 inches length (Seat, 1984). If the rocket were fed tail down and the distance between cuts were set equal to 19 1/4 inches, the desired pattern would be produced. None of the shearing locations appears to

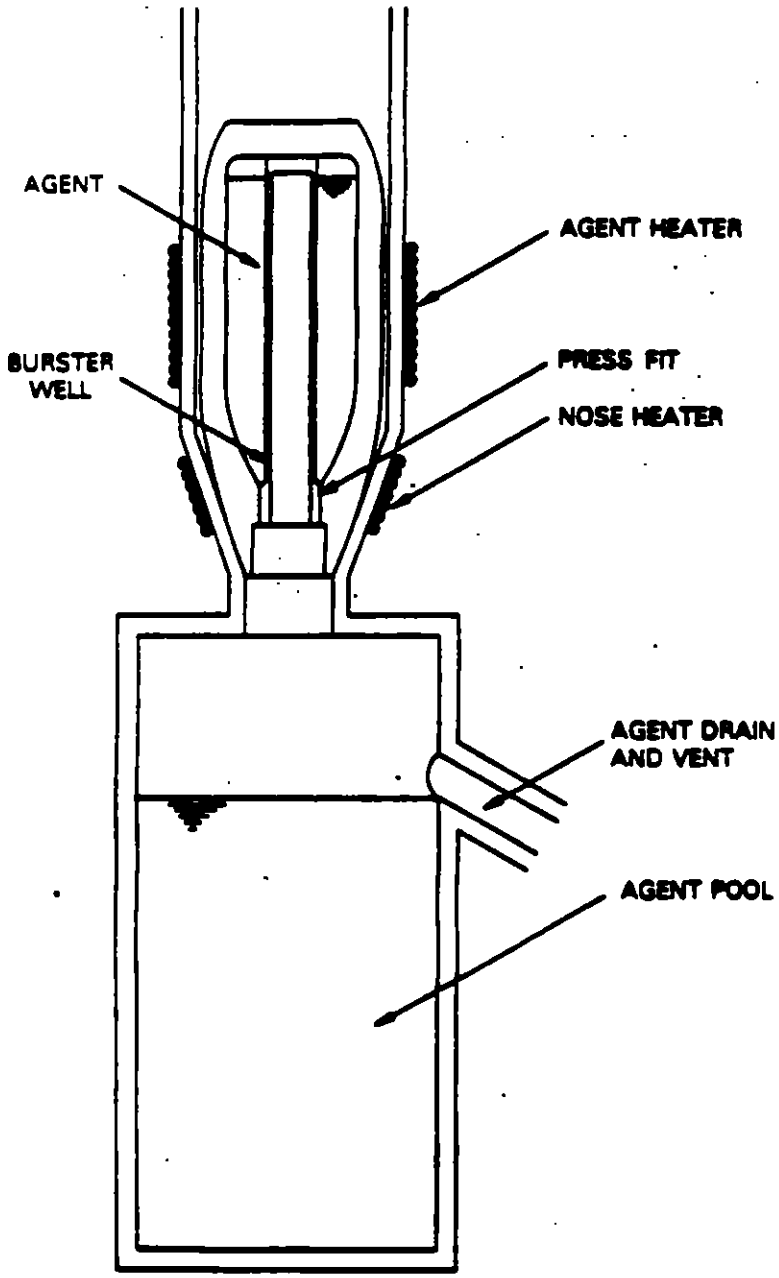

FIGURE 13 Vapor pressure expulsion of burster well.
Source: Technology Assessment Panel.

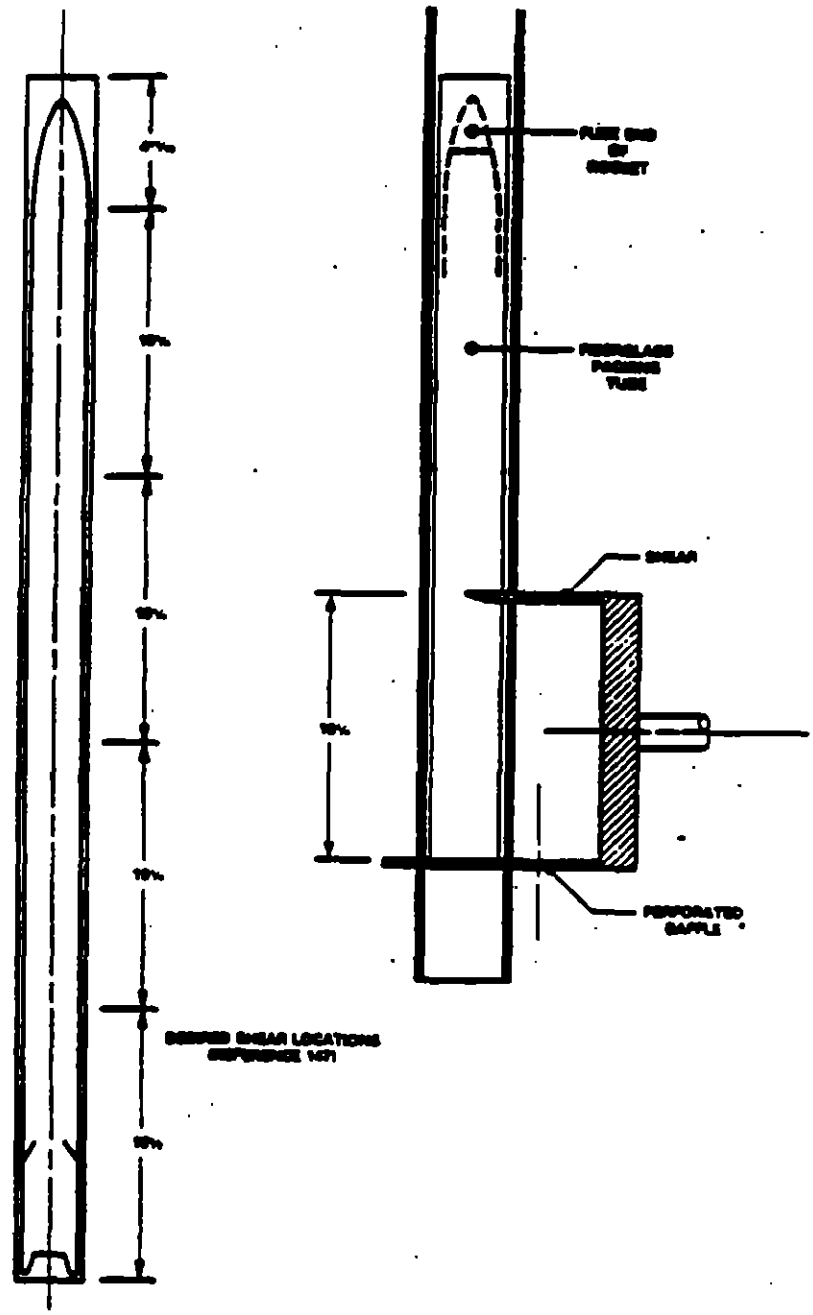

FIGURE 14 Simplified, gravity feed rocket shear.
Source: Technology Assessment Panel.

be critical except that if the top segment were too short, the shear might encounter the fuze.

In this design, cut number 3 is the first to penetrate the agent chamber and to shear the burster. When the fuze is separated by cut number 4, the agent would already have been drained from the region. In fact, if it is not attached at the fuze end or too deformed in shearing, the forward section of the burster will also have fallen out. If this occurs reliably and a small hole is provided in the baffle to pass it through, the last cut near the fuze might not be necessary.

"Steady Flow" Cryofracturing

The Army has decided to further explore cryogenic fracturing as a means for gaining access to the agent and explosives within projectiles. Cryofracturing is insensitive to munition details (Shatto, 1984b). The envisioned implementation of the concept (Carney, 1982; Davison, 1984) can be significantly improved. The system under consideration by the Army handles projectiles individually for unpacking, in batches for cooling, and individually again for fracturing. The transfer from batch cooling to individual fracturing is to be accomplished through a mechanical air lock by a pick-and-place robot. Because it would necessarily be adjacent to the fracturing operation, the robot would almost certainly be destroyed in an accidental detonation.

Figures 15 and 16 illustrate different stages of a simpler cryofracture system with only three moving parts: a projectile elevator, a blast door activated by the elevator, and the fracture hammer itself. Unpacked projectiles would be laid in a trough and would roll down when space became available. Progressing further, they would enter the liquid nitrogen bath and roll under the barrier wall. They are lifted individually from the bath by the elevator and again roll by gravity to the fracture device.

Only one projectile would be in the fracture room at any time. Fragments falling from the fracture device could be directed either into storage or into the incinerator. Since the blast door cannot be expected to provide a perfect seal against a detonation, a large vent should be provided behind the door to prevent blow-back of the liquid nitrogen to the loading side of the barrier wall.

This simple design offers the following advantages:

- Conveyors and sophisticated transfer machinery would not be needed.
- Steady feed to the nitrogen bath would avoid the violent boiling that accompanies batch feed.
- An air lock would be provided without moving parts.

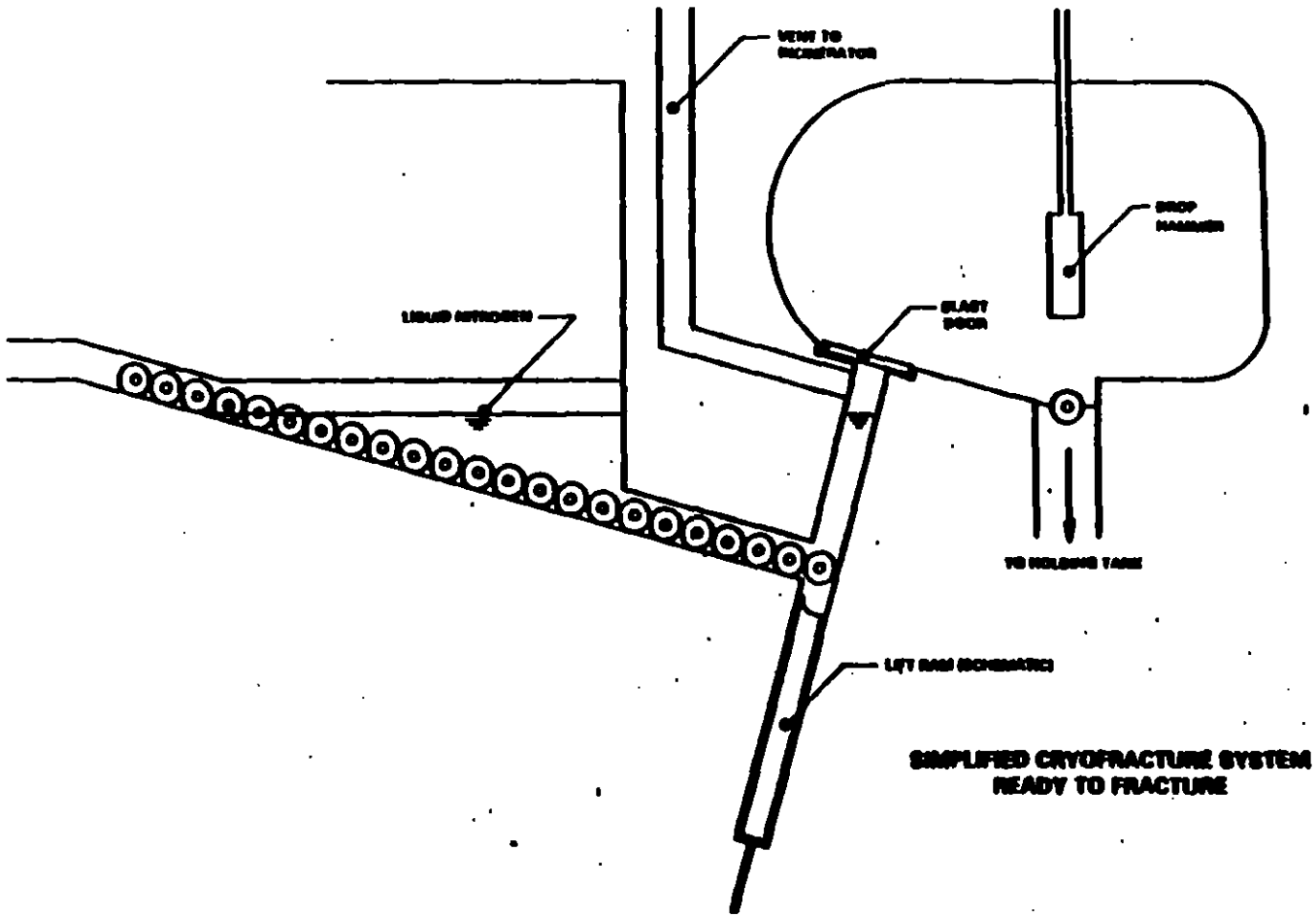

FIGURE 15 Simplified cryofracture system.
Source: Technology Assessment Panel.

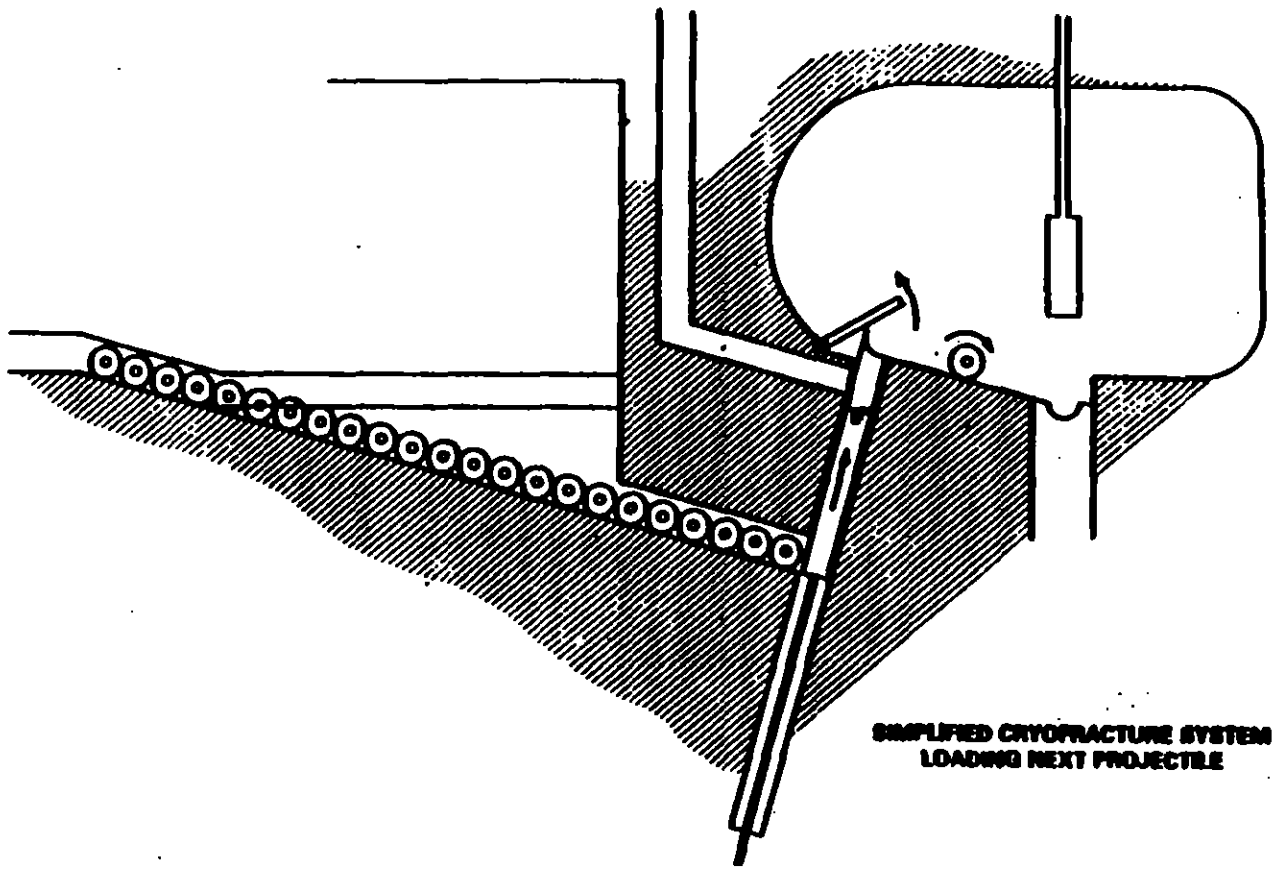

FIGURE 16 Simplified cryofracture system.
Source: Technology Assessment Panel.

- The blast door would be entirely passive, activated only by the projectile elevator.
- No machinery other than the fracture mechanism would be exposed to blast damage.
- Components of the fracture mechanism located within the blast chamber could be extremely simple, perhaps even blast resistant.

"STEADY FLOW," REGENERATIVE BULK CONTAINER PROCESSING

Figure 17 illustrates a concept designed to provide a steady flow of both metal parts and agent while, at the same time, allowing for regenerative use of thermal energy. The basic furnace would be a heated tube, which takes advantage of the simple geometry of 1-ton containers. A counterflow of materials, with containers going from right to left and with agent, vapors, and air from left to right, could be maintained through the system.

Loaded containers would enter the system by rolling through an air lock (not shown) at the right end. They would be punched and drained there,* and then pushed in a line through the tubular furnace. As each container is emptied, it would be indexed to the left one-container length, advancing all containers in the tube. Another loaded container would be rolled in and the cycle repeated. The sloped, tubular furnace would permit continued drainage of agent to the agent sump as each tank moves forward and is warmed.

The containers would be heated in the central section of the furnace to achieve a "5X" decontamination condition. Although direct induction heating of the steel container is illustrated, indirect heating by radiation from a surrounding wall might be preferred. The wall could be heated inductively as in present experimental batch processes (Schultz _et al._, 1983), by combustion of fuel oil, or, in the ultimate system, by combustion of the agent.

While the sidewalls of the containers could readily be heated by any of these methods, heating their ends would be more difficult.** Figure 17 also illustrates heavy induction heating to bring the cylindrical walls to temperature, followed by local heating at the tank ends.

Once out of the heating zone, containers would meet a counterflow of cooling air. Heat extracted from the hot tanks by the air would be given up to incoming tanks upstream of the heating zone--hence the regenerative title. After preheating the incoming tanks, the air and agent vapors would be fed as the air supply to an incinerator or burner.

---

*Provision can be made to pressurize the containers with air to hasten drainage.

**Similarly, they are not so easily cooled, so adequate time at temperature may be readily attained.

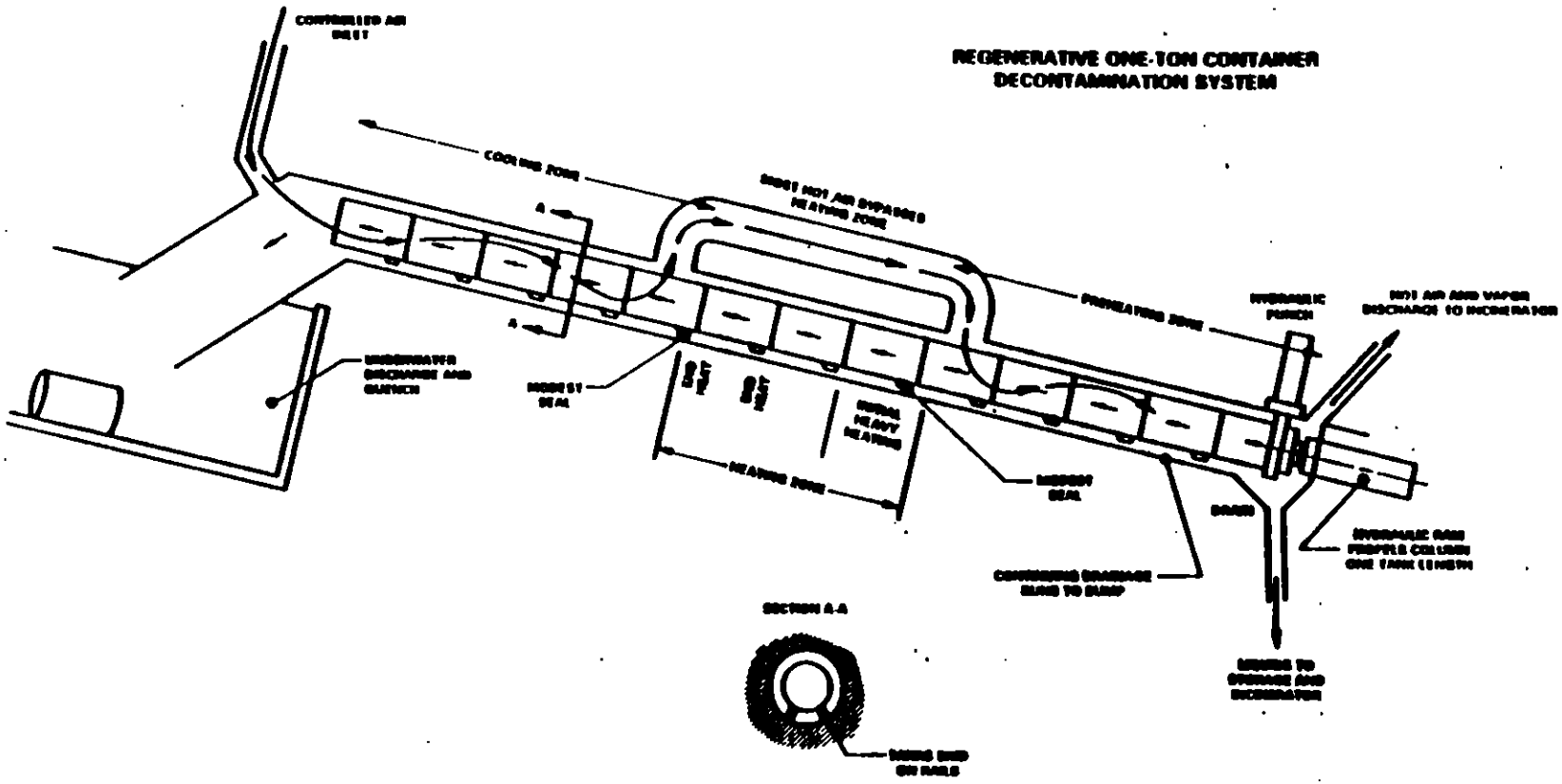

FIGURE 17 Simplified device for processing agent filled ton container.
Source: Technology Assessment Panel.

The regenerative feature offers three advantages: it would conserve expensive electricity (or other fuel energy) since much of the energy would stay in the system, it would raise the temperature within the agent combustion chamber (especially desirable if that chamber is to provide the heat source for decontamination to the "5X" level), and it might aid the drainage of incoming containers. It might be desirable to bypass most of the air around the heating zone, as illustrated, to assure high metal temperatures in this region.

Cooled, decontaminated containers would pass from the tubular furnace through a water-flooded air lock at the left of the figure. Other basically cylindrical items, including bombs and spray tanks, could also be processed in similar facilities. Perhaps even 8-inch projectiles could be decontaminated in such a facility.

The concept might be economically desirable for depots that have large stocks of 1-ton containers, such as Pine Bluff, Newport, and Aberdeen.* For small stocks, however, neither this single purpose furnace nor the larger hearth furnace of baseline technology is appropriate. Small stocks might better be handled by draining the agent for processing in a liquids incinerator and decontaminating the container by a modification of the in-shell combustion process first proposed for projectiles (Moynihan et al., 1983). In this process, the drained container could serve as its own combustion chamber for internal burning (air and fuel oil, for example) to provide "5X" decontamination.

---

*There are also large stocks at Tooele, but CAMDS already includes a furnace adequate to handle these containers.

15

System Safety

SAFETY: AN UNCOMPROMISING MANDATE

By design, chemical warfare agents are among the most toxic substances known. Munitions containing these materials must be handled so as to avoid exposure of workers, pollution of the environment, or exposure of the general population. For example, equipment and processes should be designed to prevent unintended explosions or agent releases and to safely contain them if they occur in any unanticipated way. In this regard, the Army's record has been very good.

Because of their extreme toxicity, no accident involving chemical agents is acceptable. Investigations by the Army or another agency into an accident will critically evaluate whether or not every reasonable and prudent effort has been taken and fully documented by the Army to anticipate and prevent such an accident. Reaction will no doubt be severe if the findings show that the latest means to prevent such an accident were not fully used. There should be no compromises in the system-safety program.

SCOPE OF SYSTEM-SAFETY ACTIVITIES

An effective system-safety program requires a precise description of the scope of activities to be undertaken, appropriate analytic techniques, and clear management practices.

The Army has defined the scope of safety activities for disposing of chemical agents in Military Standard 882B and its antecedents, Army Regulation AR 385-16, DARCOM-Regulation 385-3, and DARCOM-Regulation 385-23. Table 12 lists the elements of a general system-safety program; key elements are described in Appendix G.

MANAGEMENT PRACTICES

A sufficient number of qualified personnel should be available to perform system-safety activities, using analytic techniques such as those described in Appendix G. It is vital that the safety effort not

TABLE 12 Elements of Comprehensive System Safety Program

TASK	TITLE	TASK TYPE	PROGRAM PHASE CONC	VALID	FSED	PROD
100	System Safety Program	MGT	G	G	G	G
101	System Safety Program Plan	MGT	G	G	G	G
102	Integration/Management of Associate Contractors, Subcontractors, and AF Firms	MGT	S	S	S	S
103	System Safety Program Reviews	MGT	S	S	S	S
104	SSG/SSWG Support	MGT	G	G	G	G
105	Hazard Tracking and Risk Resolution	MGT	S	G	G	G
106	Test and Evaluation Safety	MGT	G	G	G	G
107	System Safety Progress Summary	MGT	G	G	G	G
108	Qualifications of Key System Safety Personnel	MGT	S	S	S	S
201	Preliminary Hazard List	ENG	G	S	S	N/A
202	Preliminary Hazard Analysis	ENG	G	G	G	GC
203	Subsystem Hazard Analysis	ENG	N/A	G	G	GC
204	System Hazard Analysis	ENG	N/A	G	G	GC
205	Operating and Support Hazard Analysis	ENG	S	G	G	GC
206	Occupational Health Hazard Analysis	ENG	G	G	G	GC
207	Safety Verification	ENG	S	G	G	S
208	Training	MGT	N/A	S	S	S
209	Safety Assessment	MGT	S	S	S	S
210	Safety Compliance Assessment	MGT	S	S	S	S
211	Safety Review of ECPs and RDWs	MGT	N/A	G	G	G
212	Software Hazard Analysis	ENG	S	G	G	GC

Notes: TASK TYPE

ENG - System Safety Engineering
MGT - Management

PROGRAM PHASE

CONC - Conceptual
VALID - Validation
FSED - Full Scale Engineering Development
PROD - Production

APPLICABILITY CODES

S - Selectively Applicable
G - Generally Applicable
GC - Generally Applicable to Design Changes Only
N/A - Not Applicable

TITLE

SSG - System Safety Group
SSWG - System Safety Working Group

Source: Appendix A of Military Standard 882B, U.S. Army

be an exercise on paper only. System improvement can be accomplished only by timely analysis and a strong management effort to ensure that resulting recommendations are implemented to reduce costs and improve safety.

The Army's system-safety program should be subject to technical audit—a generally accepted practice. In view of the risks associated with the disposal of chemical agents, there should not only be internal audits, performed by the responsible safety organizations, but also an independent audit performed by a team including "outside" experts. Such a team should consist of both civilian and military personnel, including system-safety, human-factors, combustion, industrial, and mechanical engineers as well as toxicologists, public health specialists, and chemical and explosives experts. The team should have authority to perform unannounced inspections throughout the life of the disposal program.

SYSTEM-SAFETY AT CHEMICAL AGENT MUNITIONS DISPOSAL SYSTEM (CAMDS)

Since the experimental CAMDS facility has operated on a "fly-fix-fly" principle, the scope of its formal safety program has been limited. For example, failure mode and effects analyses were conducted on parts of the system (TRW, 1975; Hercules, 1974a, 1974b), but no documentation was provided to the panel regarding the timeliness and disposition of recommendations coming from those analyses. Further, there appears to be no on-going, formal system-safety analysis of design changes throughout the CAMDS project. Nor does there appear to be a formal hazard reporting and tracking system. The Air Force, Navy, and National Aeronautics and Space Administration (NASA) use computerized programs for such purposes.

The Army should establish such a program to improve integration of safety design efforts and to ensure that identified hazards are eliminated or controlled. This step is particularly important now as the Army prepares to move beyond the experimental CAMDS program into mature production facilities, yet to be designed, that will be operated by new people, yet to be recruited or trained.

Failure mode and effects analyses are usually considered to be inductive (bottom-up) procedures; however, the analyses performed for CAMDS (Hercules 1974a, 1974b) appear to have started by posing undesirable end events and then to have reviewed the components to determine how their failure modes could contribute to such events. They do not appear to have studied each component, one at a time, to identify how it might fail and what the effect might be.

A report by TRW (1975) found no single-point failures that might cause a catastrophic event. But, only half of the analytic process was undertaken, and that was only partially completed. There were no analyses of human performance under emergency or stressful conditions and no estimates of operator workloads. Since only certain of the facility's "building blocks" were analyzed and only inductive

techniques were used, it is not possible to say with confidence that no single-point failures could exist.

In addition, the inductive approach was basically limited to equipment components. In one report, "manual operations" was included as a component, but without definition. The other analyses did discuss some human errors, but there evidently was no task analysis, no job safety analysis, and no step-by-step review of operator procedures or potential operator errors.

Thus, the failure mode and effects analysis for CAMDS was not complete. It should be completed—CAMDS can and should serve also as a pilot plant for experimenting with and developing methods for system-safety analysis.

Formal deductive and inductive analyses are needed on the potential for munition leaks and their amelioration. Evidently, leakers have occurred in numbers sufficient to cause some igloos to be sealed. Reportedly (Montel, undated), the agent concentrations within the igloo were too great to permit entry even by personnel wearing protective clothing. This suggests that in the event of a major incident, immediate corrective action might not be possible. Improved protective suits need to be developed and/or made available.

The routing of the leak-detection lines at Tooele appeared to be too long and circuitous to provide valid samples at the detector. Ventilation paths should be examined (if they have not already been) to ensure that vapor paths from potential leaks would not be drawn across operators' breathing zones. This is particularly important in those places where the breathing zone is not directly sampled and area detectors are used (see discussion on instrumentation in Chapter 11).

The safety record to date at CAMDS is excellent and a cause for justifiable Army pride. Nevertheless, a good safety record is no guarantee of future safety, particularly when the technology is used by operators other than those who have personally developed it with such care. The Army should improve and formalize its system safety by implementing a full scope of safety activities, including both inductive and deductive analytic techniques. The program should also include an analytic review of existing facilities, a hazard-tracking system to ensure that corrective actions take place, and review by an independent safety audit team.

System Safety for (JACADS)

The safety program for JACADS (Parsons, 1983c, 1983d, 1983e) is improved over that for CAMDS. The failure mode and effects analysis done for JACADS includes some human-error analysis, and there is a qualitative, deductive (fault tree analysis) effort in progress. The failure mode and effects analysis, however, was not preceded by a job safety analysis or a task analysis. No analyses carefully addressed emergency situations and operator overloads. Nor does the fault tree analysis consider interactions among equipment failures (i.e., it is a primary, not a secondary, tree).

The analysis is evidently still in progress and the documents provided did not resolve the tree to the component level. It needs to be completed to the component level before cross-checks can be completed. No listing is yet available of the paths by which a single- or multiple-component failure could lead to an undesired event.

Reliability data can be used to easily quantify those portions of the fault tree analysis that involve equipment failures only. Where human failures are involved, however, quantification is more difficult because appropriate conditional probabilities for human errors are often not available, although some data bases do exist. Where possible, the tree should be quantified and acceptable levels of risk defined.

There have been a number of computer codes developed for fault tree analysis and evaluation. These include: PREP, ELRAFT, MOCUS, TREEL AND MICSUP, ALLCUTS, SETS, FTAP, KITT1, KITT2, SAMPLE, MOCARS, FRANTIC, POCUS, SUPERPOCUS, ARMM, SAFTE, GO, GO "FAULT FINDER," NOTED, PATREC, PATREC-MC, BAM, MAM-BAM, MAMCUT, PL-MOD, COMCAN, COMCANII, COMCANIII, BACKFIRE, SKTPRN, PATRAM, SIFTARAM, MOAM, IMPORTANCE, IMPORTANCE II, BOUNDS, SPASM, TREDRA, MFAULT, RAS, FAUST, MSCAP, and CAUSE.

These include codes for qualitative and quantitative analysis, direct evaluation, common cause failure analysis, and importance assessment. Some codes involve sneak circuit analysis and software sneak analysis capabilities. The earliest such programs began in 1965, and improvements and innovations are continuing. Evidently, none of these analytic aids has been used to ensure the safety of the disposal processes used. A discussion of the general methodology used for these computer codes is found in Vesely et al. (1981).

The preliminary hazards analysis for JACADS showed the probability of a catastrophic failure to be extremely low, as is true for CAMDS. These analyses, to some extent, create a false sense of security, because no subsystem or system hazards analyses have been performed to pinpoint the likelihood that components might fail (e.g., alarms, detectors, interlocks, or controls), nor have the fault tree analyses gone to the component level. It remains to be seen whether or not the analyses will be carried to the necessary depth.

While JACADS is to use several robots, there is no evidence of careful consideration of the hazards associated with these machines. Robots are not intrinsically safe (Stowe, 1983). Provisions need to be made for pendant deadman switches, accessible emergency stop controls, physical barriers and guards, interlocked controls, limited speed modes, motion excursion limiters, "handcuff" capabilities, motion sensors, warning lights during dwell-time, power source lock-out, and avoiding shock-hazards. There should also be consideration of tool overload, explosion or fire potential, installation procedures, the proper training of all personnel, and the software/hardware interface. These and other considerations are discussed in the December 1983 issue of Professional Safety. The articles by Meagher et al. and by Potter are especially useful.

Such factors should be considered before any robots are procured or used. The reliability, maintainability, and safety of these machines are essential to the success of JACADS.

System Safety for the Expedited M55/M23 Program

The expedited M55/M23 disposal program apparently is relying on the safety record and hazard analyses performed for CMDS and JACADS. This program includes its own appropriate and timely system-safety analyses.

Safety Organization for Oversight of Planned Disposal Systems

Figure 18 shows the Army's organization for overseeing the disposal of chemical munitions. The safety personnel are understood to be located as shown in Table 13. (Both Figure 18 and Table 13 are based on informal discussions with Army personnel.)

In addition to conventional armaments and explosives, including those of the Air Force and the Navy, the Armament, Munitions and Chemical Command (AMCCOM) also manages chemical weapons. It ensures that chemical accidents and incidents, including leakers, are investigated. USATHAMA is responsible for disposing of chemical weapons and agents. There is overlap in jurisdiction with the Depot Systems Command (DESCOM), which manages the five depots containing most of the stockpiled items. The safety personnel appear to be scattered by location and duty. They also seem to respond mostly to day-by-day requirements rather than conduct an integrated safety program.

The technical information needed for system monitoring should be reviewed. A review of this important document should be conducted to take into account policy changes or new knowledge that might develope over the last 15 years. Timely updating of important criteria documents and depot practices should be an integral part of the safety program.

The Army conducts safety audits and inspects the chemical weapons activities at all eight depots in the United States and on Johnston Atoll. So far, the practical safety record has been very good. There is, however, no independent audit team to ensure objective evaluations. Such a team should be established with the authority and clearances to conduct unannounced inspections and reviews. This arrangement should not only help prevent accidents, but also assist with any legal disputes that might arise if an accident were to occur.

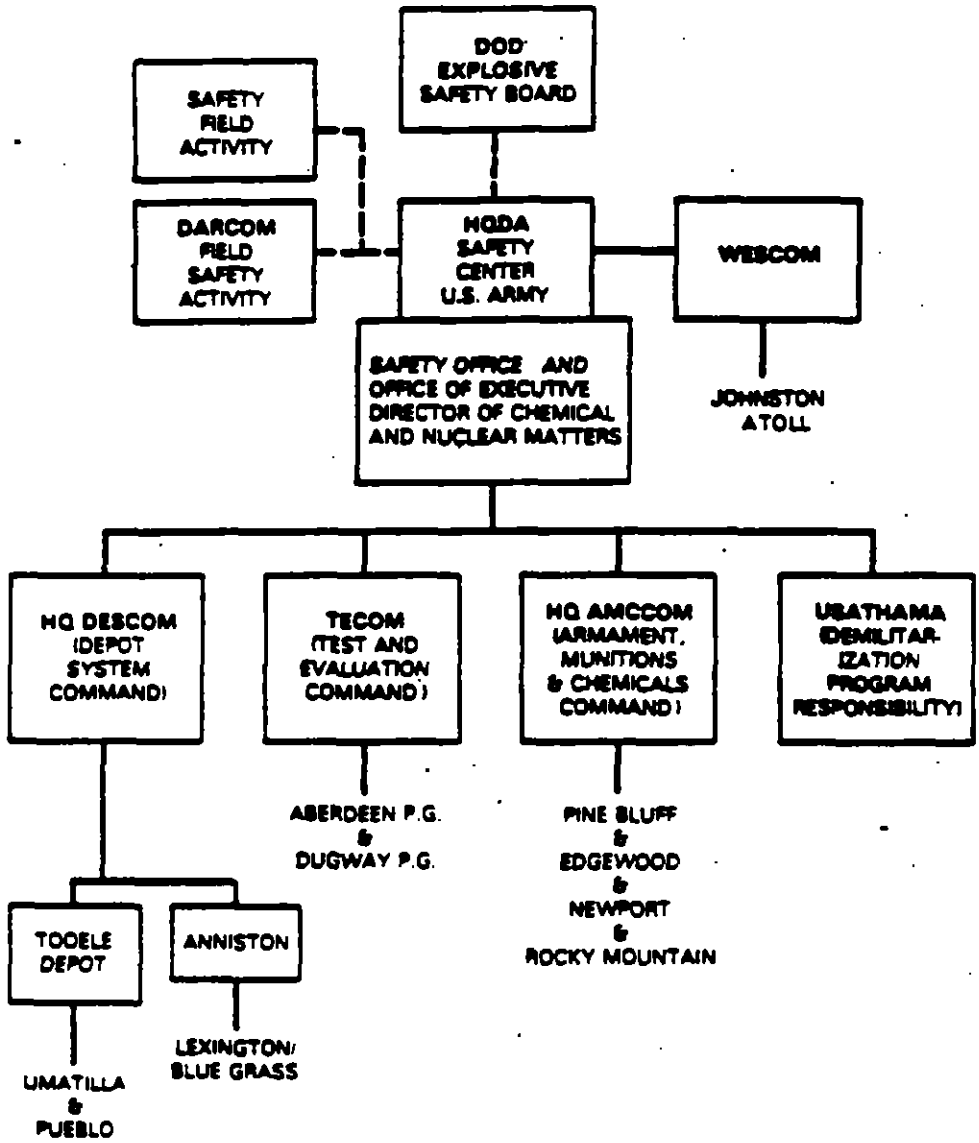

FIGURE 18 Army Safety Organization for oversight of chemical munitions disposal.
Source: Technology Assessment Panel.

TABLE 13 Location of Safety Personnel with Chemical Weapons Responsibility

LOCATION	NUMBER OF PERSONS
DOD Explosive Safety Board	1
HQ DARCOM	1
Army Safety Center	None
DARCOM Field Safety Activity	2
WESCOM	Unknown
HQ DESCOM	1 (Vacant)
TECOM	1 Part Time
HQ AMCCOM	3
USATHAMA	4 Chemical Agent Personnel
Umatilla	1
Pueblo	1 Technician
	1 Intern
	1 Safety Professional
Tooele	2
Anniston	1 Full Time
	2 Part Time
Other	Cannot Estimate

Source: Technology Assessment Panel

16

Human Factors Considerations

MIL-H-46855B, MIL-STD-1472C, and Army Regulation 602-1 establish the requirement for including human factors considerations in the development and acquisition of Army systems. As used in this report, "human factors" refers to those features of the human-machine system, including training, that affect operator or maintenance performance or error potential, which, in turn, can affect productivity and safety.

The specific considerations addressed here include:

- Allocation of functions to human or machine--typically, the question of whether the person is local or remote in the system and the level of automation.
- Task analysis--a delineation of the specific tasks people will be required to perform to accomplish their assigned functions.
- Human-machine interface--the design of the hardware or software interface with the system personnel. Implicit in this effort is the use of task analysis to determine specific information and response (controls) people need to perform their tasks under normal and emergency conditions.
- Training--the most common and accepted technique for improving competency (often very expensive).
- Procedures or job aids--documentation at the job location to guide or support the performance of selected tasks.

GENERAL HUMAN FACTORS REQUIREMENTS

Allocation of Functions (Automation)

Automation, as well as remote control and handling, plays a key role in reducing the potential for contaminating the employees of chemical munitions disposal facilities or nearby residents. It is also important to minimize the potential for human error or degraded

personnel performance, which, in turn, could affect the disposal process. This requires careful design of process functions and consideration of the human's role.

The notion of allocation of functions is found in a few instances in design requirements and documentation (e.g., see Parsons, 1983f and RFP DAAK11-84-R-007). It appears, however, that the allocation of functions and automation design in present or planned projects have not resulted from deliberate attention to human factors. Rather, those functions that cannot be performed by a human because of health or safety considerations either have been "automated" or designed for remote control. Moreover, what is referred to as "automation" is frequently no more than remote control with operators actively participating in the loop.

Further, neither human-factors methodology nor criteria appear to have been used to allocate those functions that can be implemented either by some combination of human and machine or by humans alone. No formal analysis of human factors has been performed that would develop essential information and response capability (instrumentation and controls) needed to perform those functions allocated to the humans or to monitor and intervene in these functions, when needed.

Except for detecting some malfunctions and diagnosing faults, maintenance appears to be viewed as a manual process. Most maintenance functions will be carried out by personnel wearing protective suits, known as demilitarization protective ensembles, and using both special and conventional tools and test equipment. Thus, the primary human-factors considerations for maintenance should occur during the human-machine interface design efforts.

A final and perhaps most important consideration with respect to automation and allocation of functions is the human role during emergency or upset conditions. As with most other complex systems, these process functions apparently will have a reasonable amount of redundancy and fail-safe design. Nevertheless, there probably will be occasions when operators are the primary means of controlling an emergency condition. In such cases, they will need adequate instrumentation and controls to accomplish emergency functions, even if the probability of these events is extremely low.

Task Analysis

An analysis should be performed of which functions are allocated to humans and which to machines. This is necessary to derive and document the required human performance (tasks) in terms of skill, knowledge, and the information and response required to accomplish the task.

Apparently, no documented task analysis has been performed or is planned for any of the chemical munitions disposal programs. Task analyses are needed to provide a basis for selecting personnel, developing training requirements, specifying procedures or job

performance aids, and designing the human-machine interface. There is no substitute for an adequate task analysis if performance is to be optimized and errors are to be minimized.

Human-Machine Interface

Human engineering and the human-machine interface have received the most attention to date. Some work has been done for both CAMDS and JACADS, and it is called out as a requirement in the Army Request for Proposal for the Advanced Chemical Demil System Development (RFP DAAK11-84-R-0007). Both the work that has been done and that which is called for are generally based on MIL-STD-1472c, Human Engineering Design Criteria for Military Systems, Equipment, and Facilities. This standard is well developed, but there is no indication that it or other criteria have been or will be used in the actual design process.

In the area of instrumentation and controls, human-factors engineering must deal with more than the perceptual-motor interface alone. A task analysis is required to determine what specific information and response capability (cognitive interface) are required by operations personnel to perform explicit tasks under normal and upset conditions. Such an analysis should provide the basis for evaluating the adequacy of the instrumentation and controls, assessing operator workload, and designing the best work stations.

Many of the human factors requirements, methods, and criteria developed for commercial nuclear power plants in recent years would be applicable to a review of the human-machine interface at sites such as CAMDS and JACADS or other new facilities (e.g., NUREG-0700).

Training

Training is the most commonly accepted technique for developing or improving performance capability. It should be developed using some form of "instructional system development" (U.S. Navy, 1975). This technique has been formalized over many years and proven to be a cost-effective method for developing training programs that are criterion-referenced (competency-based). It should help identify appropriate learning objectives, training media and settings, and materials and devices.

Disposing of chemical munitions requires highly trained personnel, particularly in preparing for emergency or upset conditions. To be most cost-effective, however, training needs to be integrated with the use of procedures, job aids, or human interface design to achieve best performance. Investments in procedures, job performance aids, and human-machine interface design become part of the system. Training, on the other hand, is invested in individuals and is lost whenever personnel turnover occurs.

Training plans have been developed or identified as requirements by USATHAMA for all of its projects to dispose of chemical weapons. It does not appear, however, that these plans were or will be developed according to any formal instructional system development process or based on task or job analysis. This is not a serious problem at CAMDS, where many of the personnel helped to design and build the system. In other disposal operations, however, there will be no "old timers" to build on. In those cases, training will be crucial; new and inexperienced people will need to be brought in and expected to perform effectively.

Procedures or Job Aids

Procedures (i.e., technical documentation or instructions) are an important part of operating any complex process. They tell people how to perform infrequent tasks and how to respond to low probability events. A detailed task analysis is the best basis for initiating procedure development.

The Army has spent almost 15 years developing the "Army New Look" manual, which is now known as SPA (Skill Performance Aids) and formalized in MIL-M-63036 (TM). This approach reduces performance time and errors. In fact, much has been learned about procedures and their effect on human performance, and there are established guidelines and criteria for the format and presentation of procedures (e.g., Matterick and Price, 1980). This knowledge should be used in designing disposal procedure.

In recent years, microprocessors and flat panel displays have led to developments in computer-based information systems, including interactive systems, for supporting individuals in their jobs. The prospect of using these more innovative techniques should not be overlooked.

Other human factors considerations that could affect human performance include personnel selection, job design, effects of shift work, and the impact of decisions on whether or not munitions and agents are to be transported to regional depots.

HUMAN FACTORS IN CURRENT OR PLANNED PROJECTS

Human Factors Considerations at CAMDS

Because CAMDS is continually evolving, there apparently has been no formal effort to allocate functions and determine the optimum role of personnel with respect to productivity and safety. Most materials are handled either manually or by using forklifts, hoists, and pick-and-place robots. Most maintenance is carried out manually. In toxic areas employees wear the demilitarization protective ensemble (USATHAMA, 1983a).

Also, because CAMDS is an experimental facility, it appears that no documented task analysis was done. Such analyses will be needed to provide the basis for developing training requirements, procedures, and the human-machine interface design of future production-type facilities.

A human factors analysis was conducted for the agent destruction system at CAMDS in 1974 (Jones and Albaugh, 1974b). This analysis was limited to the human-machine interface. Numerous problem areas were identified and recommendations made for their resolution. The panel has no way of verifying whether these recommendations were carried out. The analysis was based on early concept design drawings, and the report recommended that an analysis of the final fabrication and installation design be performed. This does not appear to have been accomplished yet.

The equipment and facilities at Tooele show that, in some form, every classical man-machine interface problem exists at CAMDS. These problems include instruments that cannot be read, inadequate signage, temporary labels and colored tape strips to aid identification and instrument relationships, and controls that go the wrong way (e.g., moving switches down instead of up to turn equipment on). Taken together, these discrepancies represent a greater potential for operator error than is necessary; however, the net productivity and safety consequences of such deficiencies could not be assessed by the panel.

A training program has been developed for CAMDS (Lurk, 1981), but there is no evidence that the training plan was developed with a formal, instructional systems development approach. None of the training materials furnished to the panel has well-defined learning objectives. In view of the continually evolving, experimental nature of CAMDS, training is accomplished primarily by classroom instruction and over-the-shoulder learning on the job. No extensive use is made of simulators or training devices. It is not clear what training is given for low probability events that could have serious safety consequences.

The technical procedures at CAMDS tend to be event- rather than symptom-oriented. These procedures might cover most situations, but some events might occur for which there are no procedures. Also, there might be upsets for which the cause is not apparent. In either case, personnel must rely on skills acquired from training or on the human-machine interface design and the adequacy of instrumentation and controls.

JACADS

The panel was briefed on JACADS by Ralph M. Parsons Company and by USATHAMA. It also reviewed the final design concept documentation. Since the design is still evolving, however, and since construction is not

scheduled to begin until 1985, no observations of actual equipment or facilities could be made. From the human-factors point of view, the JACADS design differs from CAMDS in the following ways:

- JACADS is to have substantially more automation and less direct handling of materials by personnel.
- An integrated instrumentation and control system is to be provided, and most functional areas are to be monitored or controlled from a centralized control room.
- There are observation corridors with local instrumentation to be used for direct viewing of various process functions or equipment.
- The processing rate and the number of personnel required to operate the facility are to be considerably greater than at CAMDS.

Neither the high level of automation nor the centralized control design imply that a minimum skill level of operating personnel is adequate.

JACADS planners have recognized the need for human-factors considerations in the design and development of the processing systems. This is evidenced by the development of a human factors engineering criteria document (Parsons, 1983f) for the design and development of processing systems, equipment, and facility interfaces. The criteria and guidelines in this document are well organized, and they are based on recent and relevant standards and criteria from the military and the commercial nuclear power areas. They are limited, however, to human-machine interface considerations. While the allocation of functions is addressed briefly, no specific methodology or criteria is included.

There are, of course, requirements that are unique to JACADS, such as areas in which the demilitarization protective ensemble must be worn, for which the human-factors engineering criteria were not empirically derived. Nevertheless, these criteria seem to have been reasonably and logically developed, and are generally well stated in the document (Parsons, 1983f).

The human-factors engineering criteria developed for JACADS apply to the human-machine interface primarily in the human perceptual-motor or anthropometric area. These criteria can be applied to certain interfaces, such as work-space design, work environment, and design for maintainability, more or less independent of the required task performance.

In the area of instrumentation and controls, the application of human-engineering criteria to the control and display design is not, in itself, enough to ensure the best performance. It is also necessary to consider what specific information and response (controls) are needed to perform explicit tasks under either normal or abnormal conditions. No task analysis has been done that can serve as the basis

for deriving these requirements, and there is no assurance that adequate instrumentation and controls will be available in the control room. This includes consideration of emergency or upset conditions and the information needed to make decisions during such conditions as well as the controls, communications, and procedures needed to implement them. Finally, there appears to be no documented analysis to provide the basis for the design of the control room or to determine the number of work stations and personnel required for effective operation.

As at CAMDS, maintenance at JACADS will be primarily manual. It, likewise, will require entry into the facility in special protective suits. No documented task analysis has been performed for JACADS operations or maintenance. Nonetheless, personnel positions have been identified and the preliminary instrumentation and controls have been determined.

An analysis of specific training requirements should be conducted for JACADS. Since the skill demands for maintenance and operations personnel are likely to be unusual, training is essential for a cost-effective and safe operation. Training is scheduled to take place from August through November 1988. In view of the time required to prepare training materials and equipment, planning should begin now, particularly if a task analysis has to be done.

No information was available with respect to procedures or job performance aids for JACADS operations or maintenance. Specific procedures should be developed for both normal and emergency operations as well as for maintenance.

The Technology Development Program

Except for CAMDS and JACADS, none of the R&D concepts for handling materials and destroying munitions and agent has been sufficiently well developed for this panel to assess the human-factors considerations and their implementation. The panel notes that the Request for Proposal dated November 3, 1983 for the Advanced Chemical Demil System Development contains the following paragraph (page 15):

> (b) Human Factors Engineering (HFE). HFE analysis shall be performed to ensure that the RAM and safety of the system is not degraded through human activities during operation or maintenance. HFE program requirements shall be accomplished through the use of established HFE design criteria and practices based on MIL-STD-1472. The contractor shall perform allocations of functions to personnel, equipment and human-machine combinations based on analysis and trade-off studies, including factors such as: required sensitivity, precision, time and safety; minimum number of skills required to operate and maintain the system; and time-cost performance.

If this requirement is carried out fully, it will clarify some human-factors considerations. The requirements for task analysis, training, and job performance aids were not specified in the RFP, but might be accounted for later.

GOVERNMENT VERSUS CONTRACTOR OPERATIONS

The panel has conducted a cursory examination of whether the disposal facilities should be government-owned and contractor-operated or government-owned and government-operated. No conclusions are offered; this management question is left for the Army to decide.

17

Transportation Safety Considerations

At the beginning of its study, the committee had hoped to make a definitive statement about the relative risks and costs of (a) continuing to store and ultimately to destroy the stocks of chemical munitions and agents at their current storage depots, or (b) transporting some of them to carefully chosen consolidation sites, which could reduce the number of disposal facilities to be constructed. Such shipments might be justified if the net risks involved in shipment, storage, and destruction at a few depots were clearly lower than those of storage and destruction at each of the current sites—considering workers, neighbors, and people along the transportation route. If the risks of transport are acceptable and not greater than those of keeping the munitions where they are now, then decisions based on minimizing costs can be made without jeopardizing safety.

The data required for such comparative safety-hazards-risk assessments are not available. Clearly, the Army needs solid, professional, and independent assessments of the relative risk and cost of disposing of chemical agents and munitions on-site versus transporting them for destruction at regional sites. Assessment of transportation factors was not the responsibility of this panel.

The two principal transportation studies that have been completed are contradictory. In 1982, General Atomic Company studied off-site transportation of chemical munitions and agents (General Atomic, 1982). The study analyzed the items to be shipped, four transport modes (air, highway, water, and rail), and the distances involved. The study used current public laws and regulations, plus hypothetical accidents to determine how shipping containers should be designed. The study identified and evaluated containers that could enhance safety. The one selected as best, an integrated overpack concept, CAMPACT, was described in detail and analyzed for life-cycle cost, possiblity of design limits being exceeded in an accident, and its ease of handling.

The General Atomic report recommended:

> Truck transportation using the CAMPACT is the least costly and safest transportation mode. Further study is required to evaluate the effects of escort requirements and sociopolitical considerations on this conclusion. Air shipment with CAMPACT protection is not cost effective and does not improve accident safety (neglecting an evaluation of the relative consequences of an agent release).

In 1983, the Oak Ridge National Laboratory (ORNL) studied some transportation alternatives for regional disposal of chemical weapons (Shappert et al. 1983). This detailed cost analysis focused on moving all items to a single depot (Tooele) or to two regional sites (Tooele and Anniston). It compared rail, highway, and air transport, and dealt in detail with institutional situations.

The ORNL report stated:

> The maximum costs of shipping chemical warfare (CW) stocks occur when air is used as the preferred mode of transport and are minimized when rail is used. Costs are also minimized when the alternative of using two regional sites is considered, as opposed to one national site because the total number of ton-miles is reduced. The additional advantage of utilizing two regional sites is that two plants can process the CW materials at a faster rate, thus completing the overall demilitarization program more rapidly. By reducing the number of ton-miles required to transport all stocks to the processing sites, public exposure would be reduced. The potential of terrorist attacks during the shipping phase would also be decreased.

Further, the report recommended that, "In any case, the [Rocky Mountain Arsenal] should be considered as one viable option for handling the Pueblo material." The Army, however, has already experienced substantial problems with nerve agent stored at the Rocky Mountain Arsenal (U.S. Army, 1981). Thus, as a result of protests by Denver area residents, Congress (PL 96-418) required that all chemical munitions be removed from that arsenal. The munitions were finally flown to Dugway Proving Ground and trucked from there to Tooele. The move was challenged by Utah groups in court, but the court ruled against them. The total cost for moving 888 items was approximately $6 million (Carney, 1984).

Residents around the Lexington-Blue Grass depot seem to be vigorously opposed to having a disposal facility located near them. For example, the Madison County Fiscal Court, at its March 5, 1984

meeting, asked the Army to safely transport any nerve gas stored at the Lexington-Blue Grass Depot to an area less densely populated for storage or disposal, or to explain why it cannot be safely transported (Botner and Wagner, 1984).

Neighbors of other chemical munitions depots might also prefer that disposal be carried out elsewhere. Disposal anywhere might seem safer than nearby disposal, if one bases the conclusion upon desire and neglects risk in local and/or long-distance transport; but there is risk in transport too. The key issue is whether the total risk of transport and disposal at another depot (or continued storage) is less than the risk of disposal at a given current site without transport.

All off-depot transport of chemical munitions subsequent to the enactment of PL 91-121 has been carried out only after thorough planning and approval by the Surgeon General of the United States (Staniev undated a and b; Griffin 1981; U.S. Army, 1981 a and c). The last shipment prior to PL 91-121, known by this panel, was to the Military Ocean Terminal at Sunny Point, North Carolina, where rockets packaged in steel-enclosed concrete vaults were loaded aboard the S.S. LeBaron Russell Briggs for ocean disposal on August 18, 1970 (Ferer, 1975). All such movements were made safely.

As discussed earlier, however, a good safety record in itself is no guarantee that a serious accident will not occur during future transportation operations. Further, the situation has changed since those shipments were made. For one thing, terrorism has increased dramatically. In addition, the general public and citizen activist groups have displayed increased concern about chemical munitions and agents either being located near or transported through their communities, let alone brought there from elsewhere for processing.

The Army should examine both the General Atomic and the ORNL approaches and adjust them to the same assumptions and cost parameters to determine which transport mode (rail or highway) really is cheaper. More importantly, neither of these studies adequately defined the risks of transporting chemical munitions and agents. Nor have several analyses (Katz, 1974; Jones and Albaugh, 1974a and b; U.S. Army, 1981a and b) assessed the hazards and risks associated with on-site disposal or long-term storage.

Therefore, no meaningful comparison could be made between the risks of on-site disposal and those involved in transporting chemical munitions for centralized disposal. An adequate study would need to consider the possibility of accidents that have high probability rates with relatively minor consequences as well as those having low probability rates with very severe consequences. Such an analysis should recognize that the socio-legal-political constraints on transportation are emotional, interdependent, and substantial. A great deal of convincing will be required before an Army proposal for transporting chemical weapons will be approved. Indeed, considerable delay can be expected.

The conclusions from such a transportation safety analysis would no doubt be controversial and inconclusive, and the decision whether to transport or not would almost certainly be made on grounds other than

hard evidence. Nevertheless, to avoid delay caused by debate over the need for better information, the Army should assess the risks of transporting chemical agents and munitions for centralized disposal (e.g., at Tooele and Anniston). This will give the Army the best comparative information when it is needed.

Further, both the Aberdeen and Umatilla depots border on navigable waters (the Chesapeake Bay and Columbia River, respectively). Thus, it would be physically possible to load their stocks onto U.S. Navy vessels for transport to and eventual disposal on Johnston Atoll. Additionally, Tooele is only 500 miles from Umatilla; its stocks might be sent to Umatilla for later shipment to Johnston Atoll.

18

Findings, Conclusions, and Recommendations of the Technology Assessment Panel

TECHNOLOGY

Thermal destruction of chemical agents is preferred over chemical neutralization, disposal by nuclear explosion, placement in the deep ocean, or other methods studied by the panel. Several findings support this conclusion.

- Chemical neutralization of agents is both slow and expensive. It produces a large quantity of hazardous salts that must be either stored or destroyed. The process is not suitable for destroying mustard agent. While GB can be converted into methyl phosphonic difluoride (difluro), one of the components of binary weapons, commercial processes are more economical. Moreover, the Army's need for difluoro has not been established.
- Disposal by nuclear explosion would be a fairly simple process that does not require munitions to be either unpacked or disassembled. It does, however, involve additional risks and political difficulties of transporting chemical weapons to some as yet undetermined sites for underground destruction. Sampling programs would be needed to verify exactly what had been destroyed.
- Placement in the deep ocean is not compatible with current laws. The magnitude and extent of the agent's ultimate effects on the environment are not known. Some stocks, such as those at Tooele, would need to be transported more than 500 miles before they could be placed aboard ships.
- Incineration, on the other hand, is probably less expensive than any of the preceding three major options. It has been successfully demonstrated for all four chemical agents in the stockpile. No off-site transportation of agents would be necessary. The process can be carefully controlled.

- The Army conducted a very thorough search for and evaluation of novel and alternative destruction methods, but identified no better approach.

Near-Term Programs

Three specific disposal programs are currently under way or well along in planning: BZ disposal at Pine Bluff Arsenal, the expedited M55 rocket program for several depots, and the Chemical Agent Disposal System planned for Johnston Atoll (JACADS). Based on the following findings, the M55 rocket and BZ disposal programs should not be delayed to await improved technology.

- Obsolete and unserviceable items constitute a greater hazard than other items in the stockpile and the need for prompt disposal has already been established.
- Much design work and experimental verification have already been completed.
- Mechanical processes for shearing rockets at room temperature are simple, inexpensive, thoroughly proven, safe, and reliable.
- The current thermal destruction processes are also simple, effective, and proven at the pilot scale.
- Since aluminum does not become brittle at cryogenic temperatures, cryofracture of M55 rockets will not work.
- For those depots where M55 rockets are stored, the quantities are large enough to warrant on-site disposal.
- There is no evidence that waiting 1 or 2 years for the development of advanced technology will result either in lower overall costs or reduced risk to the health and safety of the workers or the public.

The disposal of M55 rockets and BZ should not be delayed either by attempts to force transport of rockets from existing locations for disposal elsewhere or for further, possibly inconclusive, studies of transport options.

The JACADS facility is to be equipped initially for an expedited program, but built large enough to dispose of the entire Johnston Atoll stockpile. Disposal of the remaining stockpile might provide an opportunity for early application of some of the developing new technologies discussed below.

<u>Recommendation</u>: The Army should proceed promptly with the construction of facilities for safely disposing of M55 rockets at their existing storage sites. At the same time, the Army should give due consideration to such design improvements as simplified shearing devices and decontamination furnaces that avoid rotary seals, as well as other design improvements that become evident as the program is implemented. Facilities designed for disposing of M55 rockets should

provide for the subsequent, economical installation of additional and/or more advanced equipment needed for safely and efficiently disposing of other chemical munitions stored at the particular depot.

Bulk Container Processing

It appears inadvisable to use the large, three-chamber furnaces designed for baseline technology for volatilizing agent from bulk containers.

- Volatilization is slow and unnecessary.
- The equipment is large, expensive, and not well suited to other stockpile items.
- Batch volatilization affords poor control because it is a very unsteady operation that cannot be shut off rapidly.
- Simpler alternatives are available for decontamination of large containers.

Two alternative thermal decontamination approaches have been suggested: regenerative system and a modified "in-shell" combustion process first proposed for processing projectiles.

Recommendation: The Army should further explore such alternatives as punching and draining these containers with subsequent combustion of the agent in controlled-feed liquid incinerators (perhaps along with agent drained from munitions). Simpler decontamination procedures should be developed or, alternatively, containers might be chemically decontaminated, crushed to reduce their volume, and shipped safely to a central site for final heat treatment or possible ocean disposal.

Artillery and Mortar Projectile Processing

Cryofracture appears to provide significant advantages over munition disassembly as a means of gaining access to agent and burster, at least for artillery projectiles and perhaps for mortar rounds.

- It is not sensitive to munition size and design details.
- It reduces the size of parts to be fed to the incinerator.
- It allows steady, metered flow to the incinerator.
- It permits a smaller incinerator and air pollution abatement system, and reduces the requirement for explosion containment.
- It uses no fragile components; e.g., tools, saws, drills, collets.

Little detailed system design has been completed for cryofracturing systems, but the technique seems to lend itself to simple and robust design.

Recommendation: The Army should support further study of cryofracturing to resolve the remaining uncertainties. These include (a) the probability of burster detonation, (b) the ability to safely handle fuzed munitions, (c) additional design simplifications, and (d) determining the size of fragments for possible simplification of downstream transport mechanisms and decontamination furnaces.

Design Simplifications

The equipment at the Chemical Agent Munitions Disposal System (CAMDS) is more complex than would be desired for production-type disposal facilities. It offers numerous opportunities for design simplification. To a lesser extent, the same may be said of JACADS. This conclusion is supported by the following findings:

- CAMDS was developed for experimental flexibility and has grown through piecemeal modifications.
- JACADS has inherited much of its design directly from CAMDS and is an assembly of separately developed components and systems.
- Design philosophy has deliberately and properly emphasized the use of proven components, many of which were not developed specifically for disposing of chemical agents.
- Recent tests have shown that some design assumptions (e.g., inability to drain agents) are unnecessarily constraining.

Complexity is never a virtue. In a system demanding remote control or automated operation--one in which maintenance is hazardous and difficult--complexity is even more troublesome. Examples are suggested in this report to illustrate opportunities for design simplification, particularly in areas that will assist in establishing and maintaining a steady flow of materials.

Recommendation: Instead of waiting for unspecified new technology to be developed, the Army should take every opportunity to improve and simplify the existing technology and processes as the program to dispose of chemical weapons progresses.

Instrumentation Needs

While accumulation techniques such as bubblers permit measurement of time-averaged agent concentrations, no satisfactory techniques have yet been demonstrated for monitoring real-time, low-level concentrations of VX in either ambient air or in stack emissions. In part, this is because of the tendency of VX to adsorb on any surface that it contacts, including instrumentation tubing. However, recent tests by the Army indicate that the problem can be solved.

Recommendation: An accelerated program should be undertaken to develop instrument systems capable of warning plant operators long before agent concentrations reach hazardous levels. These might include instruments whose critical parts operate at temperatures in excess of the boiling point for VX (298°C).

Possible Use of Facilities after Agent Disposal

The Department of Defense generates a substantial quantity of industrial and hazardous waste that needs to be disposed of in an environmentally acceptable manner. It might be possible to reduce substantially the life-cycle costs of the chemical agent disposal systems if their incinerators could be subsequently used to dispose of other wastes.

Recommendation: The Army should explore the possibility of using facilities designed to dispose of chemical warfare agents to also dispose of Department of Defense wastes and perhaps for wastes and hazardous materials from other sources. This exploration should precede final facility design in order to accommodate design features that might economically and safely facilitate such future use.

SYSTEM SAFETY

Need for an Integrated System-Safety Program

Safety has clearly been an important consideration in the Army's programs to dispose of chemical munitions. Soon, however, the Army will be shifting from the experimental operation of a pilot plant by a seasoned crew to "production facilities" with all new personnel. Before this change occurs, there is a need to improve the planning, management, and documentation of the Army's system-safety program. This conclusion is further supported by the following additional findings:

- The system-safety analysis program has relied primarily on inductive techniques. These "bottom-up" approaches seek to determine the consequences of a given failure mode for a specific component. Only preliminary, incomplete deductive analyses have been conducted. These "top-down" approaches identify undesirable end events and seek to determine how they might be caused (see Appendix G).
- The failure mode and effects analysis conducted on CAMDS was less complete and conclusive than would be desired for a new "production" facility.
- The JACADS system-safety analysis is an improvement over that for CAMDS, but still does not include all the tasks identified

in Table 14; for example, no operating and support hazard analysis was performed.

Recommendation: A comprehensive system-safety program should be initiated based on MIL-STD-882B, Army Regulation 386-16, DARCOM Regulation 385-23, and the management oversight and risk tree (MORT). The program should use CAMDS as a test-bed for examining and selecting effective analytic techniques to ensure safety. Additionally, an expanded JACADS safety program should be developed that incorporates system-safety analysis in a timely manner and includes a specific analysis of hazards associated with robots. Likewise, the expanded safety program should be used in designing the final construction details, wherever necessary. Computerized fault tree analysis should be performed for some undesirable end events.

Organization and Responsibilities

Safety personnel are not assigned and organized to conduct an integrated safety program. This conclusion is based on the following findings:

- No single organization is responsible only for the safety of chemical weapons disposal facilities and dedicated to managing a comprehensive system safety program.
- A comprehensive and up-to-date hazard oversight and tracking system does not exist.
- Analyses have not been maintained on a dynamic, continuous basis.

Recommendation: An adequately staffed organization of system-safety engineers, human-factors engineers, and other safety-related specialists should be assembled to focus exclusively on the program to dispose of chemical munitions as a means to ensure a continuous, coherent safety program throughout the life of the system. This organization should be responsible for:

- Immediately installing an information system to track and correct identified hazards.
- Ensuring that quantitative analytic techniques are used to identify single-, dual-, and multiple-fault paths, where appropriate. Additionally, these techniques should be cross checked--inductive against deductive and vice versa--and be appropriately applied throughout the life cycle of the system.
- Conducting a timely safety and human-factors review of all engineering and management changes, designs, operations, and procedures.

Additionally, the U.S. Army Toxic and Hazardous Materials Agency (USATHAMA) should establish an independent safety audit team, consisting of civilian and military experts in the various system-safety disciplines related to the safe disposal of chemical munitions. This team should review the safety program and audit the facilities on an on-going basis. This team should have the authority to make unannounced visits and to investigate accidents. It should operate separately from, and in addition to, the existing Surety Office inspections and field safety activities. Nevertheless, cooperation among all of them is essential.

Technology Information

Some information that could affect decisions and operations appears to be incomplete, incorrect, or out of date. For example, Army Regulation 385-28 on the safe disposal of BZ was last updated in 1969.

Recommendation: Information sources that are important to planning and operating facilities to dispose of chemical munitions, should be reviewed and updated, if necessary.

Transportation Safety

The hazards, risks, and costs of transporting chemical munitions and agents are not well known. Consider the following findings:

- Army transportation considerations are dominated by the very high costs experienced in earlier air transport operations.
- Contractor studies are contradictory--showing truck transport to be the least costly mode in one study and rail transport in another.
- Hazard and risk analyses have not been done with sufficient rigor either for transport or on-site disposal to permit a meaningful comparison between the options.

The Army is considering, but is not now planning, off-depot transportation of these agents. The panel does not recommend such transport. Nor does the panel have a quantitative basis to dismiss the option--transportation does offer some attractive advantages. Neighbors of any current storage depot can be expected to ask that the materials be transported elsewhere for disposal. Similarly, neighbors of proposed alternative disposal sites and all persons along transport routes can be expected to object.

Nevertheless, while the panel has not been able to study transportation in detail, it believes that transporting munitions such as M55 rockets to centralized disposal depots would not be safer than

on-site disposal. Of all chemical munitions, the M55 rocket is the least likely candidate for safe and economical transport.

Recommendation: M55 rockets should be destroyed where they are located for the following reasons:

- They exhibit the highest proportion of leakers.
- They are the weakest agent-containment vessel.
- They contain the highest proportion of explosives (and propellant) relative to total weight.
- They are fuzed.
- Detonations or fires are known to provide enough heat to initiate further detonations.
- Once ignited they can move under their own propulsive power.

For chemical weapons and agents remaining after the expedited programs have been completed, disposal at properly designed and appropriately scaled on-site facilities will probably cost less than transportation and disposal at large, central facilities. This should be investigated further. Additionally, the panel is concerned that delay in the face of opposing public pressures can only lead to increased cost and decreased safety.

Recommendation: The Army should undertake an expedited depot-by-depot assessment of the risks and costs of transporting munitions for disposal at consolidation sites. These results can then be compared with on-depot disposal options. Such a study should examine the potential for carrying stocks from Aberdeen and Umatilla by U.S. Navy vessels to Johnston Atoll for disposal. Transporting stocks from Tooele to Umatilla for subsequent shipment to Johnston Atoll is another option to be considered.

HUMAN FACTORS

Need to Extend Human Factors Activities

Some human engineering studies concerned with the human-machine interface have been performed for CAMDS and JACADS. They are called for in the procurement specification for the Advanced Demil Concept Development. The panel, however, has received no explicit information to indicate whether these efforts actually influenced the design at CAMDS and JACADS.

Recommendation: Before designs are completed and construction begins for JACADS, the Army should conduct a detailed review of the CAMDS operation to identify those human factors that need to be taken into account in future designs. These considerations should be exploited to the maximum extent possible to minimize design-induced errors or

performance degradation at JACADS and all other chemical weapons disposal programs.

Training

Operating and maintenance personnel might not be trained to cope with some abnormal events because (1) the current training program at CAMDS is largely based on "over-the-shoulder" demonstration and practice of normal operations, and (2) the development of formalized training plans for JACADS and future disposal operations has lagged.

Recommendation: USATHAMA should prepare an instructional system development methodology tailored to the chemical weapons disposal program. That methodology should be used to:

- Improve and document training at CAMDS.
- Develop training plans for JACADS.
- Develop training plans for the expedited M55 and M2 disposal programs, and for advanced technology projects.

Part IV
Appendixes

A

Toxicology of Chemical Agents

There are four major agents in the stockpile that are candidates for disposal. These are mustard gas or H, $C_4H_8Cl_2S$; sarin or GB, $C_4H_{10}PO_2P$; VX, $C_{11}H_{26}NO_2PS$; and BZ, 3-quinuclidinyl benzilate.

In addition to these the Army has small laboratory quantities of other toxic agents, mainly a legacy from World War I. Some, along with their toxic classification, are listed here, but they are not in the current Army stockpile and will not be further discussed in detail. They are the vesicant (chemicals that induce skin blistering) lewisite ($C_2H_2AsCl_3$) and the pulmonary irritants chlorine (Cl_2) and phosgene ($COCl_2$). The physical and toxic properties of the four major agents are summarized in Tables 14 and 15 and discussed in more detail in the following pages.

MUSTARD GAS

Physical, Chemical, and Toxic Properties

Mustard gas is termed agent H by the U.S. Army and comes in three varieties that differ mainly in purity. H is the crude agent made by the Levinstein process (Mann and Pope, 1922). Distillation of the crude material yields HD. A mixture of HD (60 percent) with a similar compound T ($ClC_2H_4SC_2H_4)_2O$) is termed HT (Department of the Army, 1975). HT has the advantage of a lower melting point than pure HD, which freezes at 15°C and therefore cannot be poured at low ambient temperature.

Mustard gas belongs to a family of toxicants, the N-, S-, and O-mustards. Mustard is a colorless, oily liquid with a garlic odor. It quickly numbs the olfactory neurons, after which the odor is no longer detected. Although the boiling point of this "gas" is relatively high (225°C), it has a significant vapor pressure at ambient temperatures and even in the solid state at 0°C the vapor pressure is 0.025 mm of Hg (Merck, 1976). This is 28 percent of the

TABLE 14 Chemical and Physical Properties of Agents[a]

Agent	Chemical Formula	Molecule weight (daltons)	Boiling Point (°C)	Melting Point (°C)	Vapor Pressu at 20° (mm Hg
H	$C_4H_8Cl_2S$	175	225	5 to 14	0.059
HD	$C_4H_8Cl_2S$	159	217	14	0.072
HT	[b]	(HD = 159)[b] (T = 263)[b]	228	0	0.079
GB	$C_4H_{10}FO_2P$	140	158	-56	2.2 (:
VX	$C_{11}H_{26}NO_2PS$	267	300	-51	0.000
BZ	$C_{21}H_{23}NO_3$	337	[c]	167	1.43x:

[a] H, HD, HT, GB and VX data (U.S. Army, 1975).
BZ data (Defense Technical Information Center, 1977).

[b] HT is a mixture of 60% H and 40% T, $C_8H_{16}Cl_2OS_2$.
T is known as bis (2(2-Chloroethylthio)ethyl)ether.

[c] BZ decomposes before boiling.

TABLE 15 Toxic Properties of Agents

Agent	LD_{50} (mg/kg)	LCt_{50} (mg-min/m^3)	TLV-TWA (mg/m^3)
H		1500[a]	0.003[a]
GB	1.015[b]	100[b]	0.0001[b]
VX	0.0075[c]	35[c]	0.00001[c]
BZ	0.5-3.0[d]		

[a] The LCt_{50} is based on 6 hr exposure of rats to H vapor (Edgewood Arsenal, 1975).
[b] LD_{50} is average of several species after intravenous administration. LCt_{50} is estimated in man for $\leq$2 minute exposure (Edgewood Arsenal, 1971).
[c] LD_{50} and LCt_{50} are estimated in humans (Edgewood Arsenal, 1970).

vapor pressure at 30°C. Mustard gas is virtually insoluble in water, but, because of its high lipid solubility, it rapidly penetrates the skin. Mustard is considered "persistent." One report indicates prolonged contamination of French soil after use of mustard during World War I (Case and Lea, 1935). However, another report indicates a half-life of only 5 minutes in water at 37°C (Bereblum, 1935).

Although inhalation of mustard gas produces pulmonary edema, it is usually classified as a vesicant. Perhaps of greater importance because it is often overlooked, mustard is apparently a potent carcinogen in man and animals (IARC, 1975). In one study, inhalation of mustard gas for only 15 minutes produced lung tumors in mice during an 11-month observation period (Heaston and Levillain, 1953).

Current Exposure Limits for Mustard Gas

The Army currently uses four air concentration levels as worker exposure limits: a short-term limit of 0.4 mg/m^3; a single 3 hour limit of 0.01 mg/m^3; a single 8 hour limit of 0.005 mg/m^3; and an 8 hour, 5 day limit of 0.003 mg/m^3. In addition, limits for exposure to the general population are 0.01 mg/m^3 (ceiling), 0.00033 mg/m^3 (3 hours), 0.00017 mg/m^3 (8 hours), 0.0001 mg/m^3 (indefinite). The origin of these limits is from consideration of studies discussed in Edgewood Arsenal Special Publication 740-30 (Edgewood Arsenal, 1975).

GB OR SARIN

Physical, Chemical, and Toxic Properties

Sarin, also known as GB, is the most volatile of the nerve agents in the U.S. stockpile and, for this reason, is mainly an inhalation hazard. Even so, the 158°C boiling point of this nerve "gas" indicates that it will not dissipate immediately if spilled. GB is readily hydrolyzed by either acid or base to relatively non-toxic products. The hydrolysis products, hydrofluoric acid and isopropyl methylphosphonic acid, both can readily attack metal, which may explain degradation of some weapons. GB is miscible with water, but under neutral conditions (pH 7) the half-life for hydrolysis is several days (Larsson, 1957).

GB is an extremely active inhibitor of cholinesterase. By forcing the build-up of acetylcholine at the synapsis of cholinergic nerve fibers, GB causes victims to experience pinpoint pupils (miosis), increased salivation, abnormal tearing of the eyes, urination, diarrhea, convulsions, respiratory collapse, and death. The LCt_{50} of GB is 100 $mg\text{-}min/m^3$. Early treatment with oxime derivatives,

such as pralidoximine, can accelerate regeneration of cholinesterase, especially in the peripheral nervous system (O'Leary et al., 1961). Treatment with atropine, an inhibitor of acetylcholine release, can also mitigate the toxicity of GB.

Victims surviving the acute cholinergic effects of GB may suffer delayed neuropathy syndrome characterized by degeneration of peripheral nerves and permanent paralysis (Gordon et al., 1983). In addition, like similar compounds (Wilson and Fraser, 1977), GB may cause abnormal fetal development. For this reason, pregnant women are restricted from areas containing the agent.

Current Exposure Limits for GB

The U.S. Army has seven exposure limits for GB. Four are for unmasked workers. They are: single exposure, 1 hour, 0.001 mg/m^3; single exposure, 8 hours, 0.0003 mg/m^3; 5 days, 8 hours per day, 0.0001 mg/m^3; and 20 minute peak limits, 0.025 mg/m^3. Three exposure limits are used for the general population: single exposure, 1 hour, 0.0001 mg/m^3; single exposure, 1 day, 0.000003 mg/m^3; and 20-minute peak limits, 0.025 mg/m^3. The analytic basis for the current exposure limits is given in Edgewood Arsenal Special Publication 100-98 (Edgewood Arsenal, 1971).

VX

Physical, Chemical, and Toxic Properties

VX is a clear to straw-colored, oily liquid. It has a high boiling point (300°C) and evaporates more slowly than GB. It is both an inhalation and a skin contact hazard. Despite its low vapor pressure (0.00066 mm of HG at 20°C), a person would have to breathe air saturated with VX vapor for only a few minutes to attain the LCt_{50} (35 $mg\text{-}min/m^3$).

VX is more toxic than GB by all common routes of administration. It is about twice as toxic by inhalation and 10 times as toxic by oral administration. It is 170 times as toxic as GB by percutaneous administration in man, and 7000 times as toxic by subcutaneous administration in rats. The immediate, acute toxic effects of VX are like those of GB, and its mode of action is similar. Because VX does not contain a phosphorus-fluorine bond, as does GB, it is unlikely to produce delayed neuropathies in patients recovered from acute VX poisoning (Gordon, et al., 1983).

Current Exposure Limits for VX

The U.S. Army has six exposure limits for VX. Four are for workers. They are: single, one-hour exposure, 0.00005 mg/m^3; single, 8 hour

exposure, 0.00002 mg/m^3; 5 days, 8 hours per day, 0.00001 mg/m^3; and maximum limit, 0.2 mg/m^3. There are two VX exposure limits for the general public: single, one-hour exposure, 0.00001 mg/m^3; and 72 hours continuous exposure, 0.0000003 mg/m^3. The analytic basis for the current VX exposure limits is given in Edgewood Arsenal Special Publication 1100-10 (Edgewood Arsenal, 1971) and "Information Briefing on Nerve Agent VX: Annex A: Properties of VX" (Tooele Army Depot, SDSTE-ADS, 9 June 1980).

BZ

Physical, Chemical, and Toxic Properties

BZ (3-quinuclidinyl benzilate) is a muscarinic, cholinergic, blocking agent similar to atropine or scopolamine. It has relatively low toxicity as a lethal agent, but is a potent psychomimetic. At doses of 1-5 mg/kg, it produces hallucinations, confusion, delirium, amnesia, rapid heartbeat, dilated pupils, ataxia, and weakness. Symptoms may last a week, usually followed by a complete recovery. Anticholinesterase drugs, such as physostigmine, are effective antidotes. BZ is soluble in acid and has a half-life in solution of several years.

An air concentration of BZ aerosol of 0.02 mg/m^3 is considered safe for ten 10-minute exposures per week. A provisional maximum permissible concentration (mpc) in drinking water of 0.004 mg/l has been promulgated by the Defense Technical Information Center, in Technical Report 7710 (Defense Technical Information Center, 1977).

Current Exposures Limits of BZ

The panel did not have available any documents containing either suggested limits or the basis for estimating such limits, although the existence of such documents has been affirmed by personnel at Edgewood Arsenal.

B

Stockpile Assessment Panel Site Visits

The Stockpile Assessment Panel or a subpanel of its members visited all eight Army depots in the continental United States where chemical agents and munitions are stored. The visits took place between November 1983 and March 1984. The panel's report on each depot follows.

SITE VISIT TO EDGEWOOD AREA, ABERDEEN PROVING GROUND ARSENAL, MARYLAND MARCH 8, 1984

The Edgewood Area of the Aberdeen Arsenal is located 15 miles northeast of Baltimore, Maryland, on the Gunpowder Peninsula. The peninsula extends into the Chesapeake Bay between the mouths of the Bush and Gunpowder rivers. The area encompasses approximately 65 square miles. The installation has a population of approximately 5,000 military and civilians. It is not immediately contiguous to densely populated areas, although several small communities of 3,000-9,000 in population as well as scattered farms lie within 3 miles of the Edgewood Area.

Small working quantities of chemical materials are or may be stored throughout the installation. To date only one possible leaker has been detected at Aberdeen. The major sensitive areas are the chemical agent storage yard and the chemical storage and transfer facility. The former stores 1-ton containers of mustard in the open.

The chemical storage and transfer facility is a specially designed building for chemical agents used in or returned from the research laboratories at Edgewood. It houses several tons of chemical agent. It is moved in small amounts (usually less than 25 pounds) to and from laboratory work areas.

Significant Points

Bulk mustard was produced by the Edgewood Arsenal in the 1950s and stored in the chemical agent storage yard. The stocks are in

condition code A (ready for issue without qualification). A surveillance report dated December 21, 1983, stated that "there were no leakers, that all containers had been repainted and that no evidence of rust existed." A recent sample analysis disclosed that the contents from one of the containers was 77 percent pure. (the Army has indicated that the average current purity of all mustard bulk lots sampled was 76.8 percent.) These indicate that there is minimum deterioration with age.

Discussions with the chemical surety officer, security officer, and personnel from safety and storage gave every indication that the safety and security management of the Edgewood chemical stocks complied with the appropriate Army and DARCOM regulations. A December 1983 Army inspection showed no failing deficiencies in the operations.

Guards are in place at Aberdeen 24 hours everyday, and the chemical storage and transfer facility has an intrusion detection system. Documented, 1-hour patrol checks are conducted, and security guard penetration exercises are performed regularly. First-entry monitoring and visual inspection are performed daily as appropriate. Access to exclusion areas complies with the appropriate Army regulations (AR 50-6 and AR 50-6-1). There is no movement of mustard containers outside the yard, and they are stored with antiaerial devices in place. All movements of research agents appear to be conducted in accordance with applicable security and safety directives and regulations.

Discussions with Aberdeen personnel during a visit to that facility indicated a knowledge of safety and security requirements, and a demonstration of the great effort expended in handling, packing, and transporting agents to laboratories. The same concern was apparent for the handling of toxic waste materials and the small disposal effort.

The Edgewood Area, which began chemical agent operations in 1917 as a fill plant and testing facility, contains what is referred to as "unwanted chemical surety material." A cleanup plan has been adopted to sweep the surface of the area prior to the arrival of the Drill and Transfer System (DATS) in 1985. The unwanted material is currently placed in special ammunition igloos in a separate exclusion area and secured in accordance with current regulations.

In summary, it appears that a sound chemical safety and security program exists and is being used. Current actions seem to be adequate for normal industrial operations.

Comments and Suggestions

From a security standpoint, a penetration by land of either of the two main storage exclusion areas by an outside source seems unlikely. Constant surveillance and security force availability make the act of ootaining mustard agent from Edgewood very difficult. More likely is

internal penetration or mishandling of an agent, especially when considering the small amounts (often a liter or less) handled by the R&D program and the laboratories.

If Edgewood's past record is any indication, however, there is little safety risk in the storage and handling of agents. Further, containment plans apparently would preclude an accident or incident resulting from current operations.

Danger to on- and off-post personnel would appear to be almost nonexistent (except from a massive explosion and fire). Prevailing winds are from the Northeast 70 percent of the time, which would carry any released agent over the water and away from populated areas. South winds up the bay are rare, but the local analysis indicates no agent movement off the post in any event; however, a maximum credible event involving a large release was not identified.

Little environmental risk is evident except possibly from a massive explosion and fire. Even then the scattered mustard could probably be contained. The segregation, location, and small amounts of VX and GB also make serious environmental contamination by these chemicals unlikely.

Edgewood's chemical personnel seem competent and well aware of their responsibilities. No real problems in deterioration of product or in its protection, use, or storage were evident. However, Edgewood officials have not determined just what the maximum credible event should be for the laboratories. At present, it appears to be an industrial-type accident or incident at the chemical storage yard, such as a sheared valve on a one-ton container spilling 25 pounds of mustard on the ground. The chemical storage and transfer facility could experience a small spill that is contained while the laboratory could have a gas explosion that causes the release of a small amount of GB into the room.

While all of the above could happen, the question remains of whether plans for a maximum credible event are complete enough considering the potential terrorist threat.

SITE VISIT TO LEXINGTON-BLUE GRASS DEPOT, KENTUCKY NOVEMBER 29, 1983

The Blue Grass Depot is located about 50 miles south of Lexington, Kentucky. The site itself is in a rural area, but less than 3 miles away is the city of Richmond, with a population of 34,000 (including approximately 12,000 students normally attending Eastern Kentucky University). Smaller towns are located even closer to the depot (Reeds Crossing is slightly more than 1 mile from the storage area), and public roads run along its boundary.

The facility, which has an area of about 5 square miles, stores mustard gas in 155-mm projectiles; VX in 155-mm and 8-inch projectiles, and in M55 rockets; and GB in 8-inch projectiles and M55 rockets. All munitions are stored in the chemical exclusion area in

steel reinforced, concrete igloos. No munitions are moved out of the chemical exclusion area and only limited transport occurs within the exclusion area.

The depot has a natural topography that makes it a suitable ammunition storage site. The site averages 900 feet above sea level on an undulating plateau, an open and lightly forested area. The risk from fire and flood seems very low. The concrete igloos should be able to survive most natural and human-generated disasters. The risk from tornados seems very low, too.

Significant Points

The Blue Grass facility appears to be well run, with appropriate concerns for safety. Nevertheless, there seems to be a potential management problem concerning its relationship to the Anniston Army Depot in Alabama, which has command authority over the Blue Grass Depot. The latter's responsibilities unrelated to toxic and chemical weapons and its distance from Lexington make command oversight difficult, particularly when the military component of both facilities is limited.

The Blue Grass facility stores M55 rockets, which are probably the most dangerous chemical munitions in terms of their threat to depot personnel and to off-base civilians.

Chemical munitions stored at the Blue Grass Depot date from 1954. There is little information available at the storage site concerning the rate of corrosion and deterioration.

Blue Grass' security system meets Army regulations. Toxic agents could be released or obtained by force, but a substantial military-type operation would be necessary to penetrate the depot from the outside. The risk to the public seems low.

The Blue Grass facility has a potential problem of incidents and accidents caused by their own workforce. This problem is shared by all storage facilities. The risk to the public is low, but probably greater than the risk from external force.

The risk from natural phenomena is low, but unquantifiable from the information available. The risk from human-generated phenomena, such as aircraft crashes, is similarly low but real. Both these risks require appropriate evaluation.

There may be some risk from earthquakes. The Tate Creek Fault crosses the northwest boundary of the depot and swings in a southeasterly direction. A splinter fault branches from the Tate Creek Fault. However, since there is no way to evaluate this information, the risk of earthquake damage is unknown.

Aircraft fly over the Blue Grass Depot. There is a small airport a few miles to the west, though aircraft using this airport do not fly over the depot. A facility at the southern end of the depot supervises practice runs made by the Air Force's Strategic Air Command

(SAC) bombers, which fly over the depot at low elevation. The concrete igloos may be able to sustain a direct hit by a large aircraft without adverse effect on the chemical munitions, but this question needs to be examined. The igloos are designed to be unaffected by explosions of nearby igloos.

Comments and Suggestions

The Lexington-Blue Grass Depot has a long history as a munitions storage facility. Its physical characteristics minimize adverse effects from natural causes. The facility is well run and cared for by a quality workforce.

Nevertheless, the facility is a poor one for storing chemical munitions. The closeness to population centers and the relatively small size of the depot leave little margin for protection of the public in the event of an accident or incident. The facility's maximum credible event, which includes exposure of off-site populations from M55 rockets, makes the danger even greater. The immediate removal and/or disposal of the M55 rockets should be the highest priority of the chemical disposal program. While other chemical munitions do not present any immediate danger, Lexington-Blue Grass is not a good site for their storage. A maximum credible accident could deliver chemical agents to nearby areas with substantial populations.

SITE VISIT TO NEWPORT ARMY AMMUNITION PLANT
NOVEMBER 30, 1983

The Newport Army Ammunition Plant is a government-owned, contractor-operated facility. The current contractor, Uniroyal, operates the facility with oversight provided by the Army commander and his staff. Newport manufactured the chemical agent VX and chemical munitions from 1960 to 1968. Residual bulk agent is stored in 1-ton containers.

Stocks have been kept since 1976 in a building formerly used as a fill facility. The building was not designed for storing chemical weapons. Temperature and humidity are not controlled. No other ammunition stocks are stored at Newport. The 1-ton containers, similar to those used by the chemical industry to store chlorine, were reconditioned in 1978 and 1979. No leaks have occurred at Newport.

Probability of Accident or Incident During Storage

The chemical agent VX is a relatively nonvolatile liquid. The risk due to a leak in a 1-ton container is, therefore, of a different kind than in the case of a gaseous agent that might be released into the

air. The storage building, formerly a munitions fill facility, was designed to include an integral drainage system that could collect and isolate liquids for decontamination. As such, the risk associated with a leak seems low. The 1-ton containers are in static storage, so that the risk associated with their handling or transport on-site also seems low. There are no other munitions or explosives stored on-site; hence, there is no current risk that hazards associated with other munitions may affect the storage of chemical agents.

There is little evidence to suggest that degradation of the 1-ton containers represents a high risk. It is difficult to judge, however, their long-term stability based solely on visual examination of the exterior condition of the containers, particularly since the Newport containers were recently reconditioned. Because the storage building is neither temperature- nor humidity-controlled, water does condense on various occasions. Dissimilar metals are used in the brass valves, and the fittings are inserted into a carbon steel container wall.

It is currently impossible to inspect the containers for inside-out degradation. Further, there seems to be little information available on the chemical stability of the container materials exposed to the agent. It would be helpful to know more about the chemistry (formulation, pH, conductivity, oxygen content, etc.) of the agent.

It seems quite unlikely that the containers could be penetrated as a consequence of natural (tornado, earthquake) or man-made (fire, plane crash, terrorist activity) disasters. It appears, however, that contingency plans are not available to deal with such extreme events. Although the probability of their occurrence may be low, their consequences are so great that attention should be given to such matters, particularly if nerve agent is to be stored at Newport rather than disposed of.

Consequence of Accident/Incident During Storage

Although there are contingency plans for on-site personnel in the event of a chemical accident or incident, the impact of such an event on the surrounding communities seems not to have been studied. One exception is the recent environmental impact assessment done for the construction and operation of a toxic chemical laboratory at Newport. The laboratory analyzes air samples collected during surveillance of the storage facility.

It appears that containment and decontamination of individual leakers may be handled with little risk. No such incidents have occurred at Newport, which provides additional evidence that release of an agent is a low probability. It is difficult, however, to assess the probability of such events in the future with the limited information now available.

It is not clear that Newport could handle a massive chemical incident resulting from terrorist attack or other man-made catastrophe. Given the prospect of continuing storage, it would seem

prudent to develop a plan of action. A risk assessment analysis may serve as a useful guide.

Urgency of Disposal

At the moment, there appears to be no urgency for disposing of the VX in 1-ton containers at Newport. There have been no leakers in 15 years of storage and no known evidence of significant stockpile deterioration. On the other hand, the stockpile has not been systematically evaluated on a scale that would allow one to project the rate of deterioration or the potential for concern in the near or long term. It would seem, however, that disposal of agents stored in bulk at Newport would not be difficult.

SITE VISIT TO TOOELE ARMY DEPOT, UTAH
DECEMBER 8, 1983

The Tooele Army Depot is located in a remote area of Utah about 30 miles southwest of Salt Lake City. Established in 1942, it is a major site for storing chemical as well as traditional munitions. More than half of the toxic chemicals and chemical weapons in the United States are stored at Tooele. In addition, the facilities at Umatilla, Oregon, and at Pueblo, Colorado, report to it.

Among the sites visited, Tooele is a model. Its systems for assurance of safety, security, and surety are as satisfactory as can be reasonably achieved within the limits imposed by site location, current technology, budget, and the maximum concerns considered. As a result of population growth in the immediate area, the chemical agents were relocated 17 miles to the south of the main munitions storage.

Public safety is protected primarily by the storage system, in which chemical munitions are kept in separated igloos. The location of igloos is designed to prevent accidents in one igloo propagating to other igloos in the vicinity. The staff appeared carefully and thoroughly prepared to respond to a wide range of anticipated accidental releases and associated injuries. Most were trained locally and have worked at Tooele for many years. They rehearse frequently and are subjected to surprise inspections. Further, access to the igloos is guarded by a security system that should certainly protect against all unauthorized entries, save those involving a conspiracy among a significant number of staff or by a well-armed and equipped substantial force of intruders.

Surety of the stored munitions does not differ from that at other depots, being based on common knowledge, technology, and experience. Concerns as to the stability of the agents and the integrity of the metal containers are identical to those at the other sites. Tooele houses the CAMDS project that disposes of leakers and obsolete munitions.

Security appeared adequate for the nature and level of activity, as did the systems surrounding the site for detecting possible accidental releases of agents. This involves monitoring the air with standard M-18 kits, M-8 alarms, and bubbler systems. While these are not "state-of-the-art" systems, they appear adequate for the limited monitoring requirements of depot operation, specifically in igloo entry for detecting leakers.

More modern methods are available or are being tested. These include a real-time monitor based on cholinesterase inhibition, the Automatic Continuous Air Monitoring System, and an adaptation of a standard gas chromatograph with flame photometric detection. Newer monitors are in place around the depot's southern borders that detect sulfur and nitrogen oxide and particulates.

Tooele's immediate problem is with the storage of M55 rockets. As reported by the Army, the relatively unlikely accidental ignition of one rocket could lead to the ignition of others in the same igloo. This could start an intense fire that could cause the release of significant quantities of agent. Such a release could endanger those within a radius of 6 miles and even farther under certain meteorological conditions. At risk, in addition to the staff at Tooele, are some 1,000 people scattered among small towns, ranches, and mines at distances ranging from 3 to 7 miles. If a sudden evacuation of the site were necessary at quitting time, there could be a serious traffic jam.

Tooele lacks a specific plan for an effective response to a chemical accident or incident beyond the depot. In contrast to the detailed plans in printed manuals for control of chemicals at Tooele itself, there are no guidelines for chemicals that escape outside the immediate confines of the depot. This is typical of most facilities.

Considering that the Tooele Depot was originally located in a relatively remote geographic area, accessible only by railroad for collection and distribution of explosive munitions, the juxtaposition of a substantial concentration of civilian residents in proximity to substantial amounts of potentially insidious toxins poses an array of problems that have not been addressed.

The town of Tooele, with about 10,000 people, is 18 miles to the north. The largest population center, Salt Lake City, is more than 30 miles away.

Although there is no significant known reason to be concerned about the danger to the public or local staff from current activities at Tooele, it would be advisable to improve the precautionary measures. Despite the precautions taken when igloos are opened, there is a risk at that time. It should be possible to reduce the number of times igloos must be opened by developing sensors that can monitor the air inside.

The development of better detection techniques should be encouraged. At the same time, more knowledge relevant to accidental releases of chemical agents should be sought, particularly more information on wind patterns and their variation.

SITE VISIT TO UMATILLA DEPOT ACTIVITY, OREGON
JANUARY 11-12, 1984

The Umatilla Depot was constructed just prior to World War II and subsequently served as the major supply depot for operations in the Pacific. At present, it stocks standard as well as chemical munitions. The depot, on about 20,000 acres, is located in north-central Oregon about 5.5 miles southwest of the town of Umatilla (population 3,000), 6.25 miles due west of Hermiston (population 10,000), and 33 miles northwest of Pendleton (population 15,000). The Union Pacific Railroad and Interstate 84 both run a short distance to the south, and the Columbia River flows a few miles to the north. The surrounding area is primarily agricultural with large wheat and cattle ranches. A large hog-raising farm is located just across Interstate 84 from the depot. The area has very low rainfall.

The Umatilla Depot Activity, as it is formally called, reports to Tooele. It has the largest store of chemical weapons after Tooele. The chemical munitions are located in a special exclusion area within the depot. Storage of the chemical munitions and control of access to them are very similar to Tooele.

Munitions stored at Umatilla include VX in projectiles (155-mm and 8-in), 115-mm rockets (M55), spray tanks, and mines; and GB in projectiles (155-mm and 8-in), bombs (500- and 750-pound), and 115-mm rockets (M55). Mustard is present only in 1-ton containers. All VX and GB munitions are kept in igloos similar to those at Tooele. The mustard tanks are kept in a covered building within the exclusion area.

Except for the provost marshall, the military staff with the drill and transfer projects, and the medical officer, all depot personnel are government civilian employees. The security staff are all ex-military people. Because of the limited size of the staff, most personnel working with chemical agents also work with conventional munitions.

Significant Points

Umatilla has had 123 leakers since 1962, of which 77 were M55 rockets. Four were found only the week prior to the panel's visit, and, curiously, all were located in the same pallet adjacent to each other. The apparent rise in the numbers of leakers, according to the Umatilla staff, may be the result of the recent improvement in the sensitivity of the detection systems. Rabbits were used until last year; now bubblers based on an enzyme assay are used to detect chemical leaks. A detection system is under development that will collect chemicals by passing air through a column, with subsequent analysis in a gas chromatograph.

The rate of industrial accidents at Umatilla is low, possibly because of the slow and careful procedures used. The low accident rate perhaps reflects the fact that chemical area is estimated by its

staff to account for about 30 percent of the work on the base. Also, the staff receives extensive safety training.

As at other depots, the medical staff receives inconsistent and intermittent instruction and training for dealing with chemical casualties. For example, the current medical officer had been at Umatilla for six months before being sent for appropriate training. This appears to be due, in part, to the relatively minor role chemically related problems play in the overall responsibilities of the medical staff. There is scope for increased medical preparedness for dealing with chemical accidents or incidents, and attention should be given to integrating the medical support activities more closely with the chemical surety mission.

An inquiry into the controls used for cholinesterase determinations revealed that all samples—routine and incident collected—are submitted to the pathology department of Fitzsimmons Medical Center in Denver.

The experience of the medical officer in chemical agent procedures and CAIC response led to the development of a course developed at Savanna, Illinois, for Umatilla last August. All identifiable civilian medical and health personnel in the Umatilla area were invited to take the course, and about 40 did. Reactions were very favorable, and periodic repeats of the course were proposed.

Comments and Suggestions

Except for some bubblers near the drill and transfer site, there is no environmental monitoring, either outside the depot nor along its perimeter. If the regular monitoring of igloos were improved, the need for perimeter monitoring would decrease. Currently, only suspect igloos, such as those with rockets, are tested with any regularity. Umatilla staff have recommended a system for sampling the air in an igloo without the need to open the door. Their proposal seems a desirable improvement over the present system.

Umatilla appears to have no problem dealing with small accidents. In the event of a release, two-man teams (of which there are a minimum of five) are assigned to monitor specific spots on the site. They rehearse quarterly and monitor off-site if necessary. If the staff calculations are correct, an industrial-level accident would not seriously affect areas outside the depot. A spill of one-fourth the contents of a 750-pound bomb would have 1 percent lethality at 675 feet, well within the site.

But there would be the possibility of danger for the public outside the site if a major accident occurred. The most likely candidate for such a disaster is the M55 rocket. An explosion in an igloo containing rockets might ignite many of them with the estimated release of 575 pounds of GB, giving 1 percent lethality at about 5

miles, a range that could very well jeopardize Umatilla and Hermiston, plus the several smaller communities near the depot.

Local public safety officials have developed plans for coping with a large release of chemical agent. Still, there could be less than an hour to warn and evacuate a population of 10,000 if casualties were to be avoided. The Umatilla Army Depot normally provides gas masks to the local and state police, but at the time the panel's site visit these masks had all been recalled to the base because of a shortage of masks meeting inspection requirements.

Concern over the ability of local officials to deal with an accident requiring evacuation led the panel to visit Hermiston's Safety Center. Hermiston officials are much more aware and prepared for dealing with a chemical incident than we anticipated. Large portions of their plans for local and regional response to such an event can be considered a model for other communities.

Umatilla's security system is adequate to deal with small numbers of untrained intruders. But it would not be adequate to deal with the admittedly unlikely event of an attack by a trained and well-armed group.

In summary, the panel concludes that there are a number of small problems at Umatilla of the kind described above that could easily be corrected. There is one serious problem, however, with storage of rockets so near to population centers. The panel urges that high priority be given to disposal of these rockets. If the rockets cannot be disposed of quickly at Umatilla, they should be transferred to Tooele, which can dispose of them. The rockets could be flown from Umatilla, which has an airfield capable of handling military transports, to Tooele, over areas of very low population density in eastern Oregon and Nevada and Utah.

SITE VISIT TO CITY OF HERMISTON SAFETY CENTER, OREGON
JANUARY 12, 1984

Hermiston takes considerable pride in its Safety Center, a combination of civil defense, local police, and fire department resources with centralized communication facilities. Based on what the panel had heard at Umatilla, the local agencies were expected to be relatively unprepared for a serious incident threatening the towns of Umatilla and Hermiston. To the contrary, the local officials had given considerable thought as to how they would cope with an emergency requiring rapid evacuation of a large number of people from the two communities.

One panel member met with the Hermiston town manager and civil defense director, the Hermiston fire chief, a police lieutenant, and the Umatilla depot's civilian executive assistant. The local officials seemed well aware of the potential for a serious accident at Umatilla that would require a rapid evacuation of the local

population. They have prepared an "emergency operations plan" to deal with such a contingency.

Several years ago, the local public safety officials participated in a simulated emergency situation. In it, an earthquake released toxic chemicals in the same amount as the Army's assumption for an explosion in an igloo of GB-filled M55 rockets. The local officials worked through this exercise in the conference room above the communications switchboard in the Safety Center. A report describing the evaluation of the exercise made it look like a relatively detailed rehearsal for the officials involved.

The mayor and the fire and police officials did not regard evacuating Hermiston in an hour as a particularly difficult task. Using the police, regular and volunteer firemen, and public works employees, they estimated that 50 persons could be sent within 5 minutes to warn the public.

Road egress from the communities is not a problem; there are several wide roads leading out of town away from the Umatilla depot. Wreckers or public works vehicles could quickly remove any stalled cars. The officials felt that the local medical people are prepared for a chemical emergency; many local doctors took the course at the base last year and the local hospital has stocked the nerve agent antidotes atropine and PAM-2 chloride.

There are several problems that might reduce the effectiveness of the emergency response by the local agencies. Most importantly, the gas masks issued to local agencies by the Umitilla depot have been temporarily recalled because of a shortage in masks at the base that meet the current inspection requirements. Additionally, there are 15 rubber suits each with overpressure, self-contained breathing apparatus that could protect firemen, but no other protective gear is currently available off the base for use by local public safety personnel during an emergency.

The ability of the communications center to cope with an extreme emergency situation was questioned, since it is set up for only one operator. In an emergency, the volume of communications traffic might be far too much for a single operator to handle. There is no provision in Hermiston's plan for relaying information to the conference room upstairs other than someone carrying messages back and forth.

Nevertheless, Hermiston has done as good a job of preparing for an accident at the Umatilla depot as any community threatened with potential disasters that could cause large-scale fatalities. The local officials seemed well aware of the magnitude of the threat from a large amount of chemical agents released from the depot. They have carried out a planning exercise to determine how they would cope with an emergency of this nature.

SITE VISIT TO ANNISTON ARMY DEPOT, ANNISTON, ALABAMA
JANUARY 24, 1984

The Anniston Army Depot, which totals 15,000 acres of rocky terrain including 42 acres of water, is located in a valley 50 miles east of Birmingham, Alabama, and 110 miles west of Atlanta, Georgia. The population density within a 10-mile radius of the facility is about 190 persons per square mile. Two small municipal airports are located 5 and 8 miles away, and another two still smaller airports within a 10-mile radius of the facility.

Chemical munitions have been stored at the facility since 1964. Except for some leaky GB-filled M55 rockets that were disposed of in 1982, the stockpile has been somewhat stable. The chemicals stored include GB, VX, and mustard. Anniston also stores other munitions and reconstructs tanks.

Since 1981, Anniston has substituted bubblers with gas (and liquid) chromatography for the use of rabbits to monitor chemical leakage. However, bubblers are somewhat inadequate because of the greater sensitivity of humans to these toxic chemicals. Medical monitoring involves a periodic measurement of erythrocyte cholinesterase as well as a detailed physical examination. No incidents of serious exposure to any agents have occurred during the past five years, while the variations from normal cholinesterase levels have been minimal. The procedures used were standard and proven effective in detecting any leaks in the storage facilities.

Risk from Natural Phenomena

The terrain within the Anniston facility consists of heavy, nonporous sedimentary rock with an average thickness of 2,000 feet. Since the terrain has only a few minor faults, the potential for contamination of the groundwater system from minor incidents appears to be minimal. The area has a seismic zone one rating, so that a significant earthquake seems unlikely. Other natural phenomena, such as flooding and severe meteorological events, are not likely to cause serious accident.

One potential problem could arise from the fact that two-thirds of the facility's land is comprised of relatively dense forest, consisting mostly of pine. Since most of the igloos are enclosed by trees, a forest fire might elevate the temperature within the igloos, thereby increasing the likelihood of leakage or an explosion. In recent years, forest fires have occurred on the facility outside the chemical exclusion area.

Risk Factors in Storage

The chemical munitions, which are stored in steel-reinforced concrete igloos with double-locked doors, are located in the chemical exclusion area. Security and surveillance procedures, which follow established guidelines, appear to minimize the risks of internal or external penetration. Most incidents at Anniston have involved leaking containers. From a normal operating standpoint, the safety and security actions in being and planned are adequate to insure protection of personnel and property. Only the most massive accident would cause Anniston's operations to fail--and the site location and available forces in the area do not make this a likely happening.

The Army asked all storage installations in January 1984 to review their hazard zone calculation requirements to assure standardization of maximum credible events as well as their currency and ease of use.

Anniston has a manual outlining the procedures to be observed in the event of a serious chemical incident or accident. In a recent exercise, the control plan was tested by simulating an incident in which a 155-mm rocket containing VX exploded during routine transfer. Although the procedures for decontaminating the agent in the immediate vicinity of the accident are feasible, the problem of decontamination of the surrounding area is considerably greater, particularly if the agent settles in the trees adjacent to the igloos. There was some question, however, whether the staff at Anniston was adequate to handle both an accident at their own facility and one at the Lexington-Blue Grass Depot.

Consideration should be given to establishing a control plan in the event of a terrorist attack involving the chemical exclusion area. Periodic exercises, similar to those used to control a chemical accident or incident, should likewise be initiated to deal with a possible terrorist infiltration. Each facility should review its own security plans and make any necessary modifications.

Each facility would also benefit from having some remote sensors in each igloo containing toxic chemicals. It would be an added safety feature since some igloos are checked internally on a quarterly basis. These monitors could be tied to the central security office just as the intrusion detection system is at present.

The Anniston depot has no particular environmental problems specific to this site. The facility is a storage depot without active work except for monitoring. No harmful residuals or release of agents are expected on land, air, or water.

Vulnerability to External Penetration

Although there have been no incidents involving either internal or external penetration, Anniston is adjacent to two major highways and less than 10 miles away from four small airports. Since the air

traffic is very light, the likelihood of an airplane accident within the facility is slight; however, there is little to prevent a sabotage attempt from the air.

Other Risk Factors

At the time of the panel's site visit, Anniston was installing a new surveillance and monitoring system for the chemical munitions stockpile. The plans call for a number of individuals to be in close proximity to the glovebox during the drilling operations. Since drilling into loaded munitions involves a certain risk, the panel recommended that the personnel present be kept to a bare minimum during the drilling operation. It would also be appropriate to initiate a thorough training program prior to beginning the operation. In view of the success of the Army's drill and transfer program, there is a good likelihood that SUPLECAM can be performed with minimal risk.

Recently, an uploading program (GB and VX in 155-mm projectiles) undertaken at Anniston revealed a number of deficiencies. The loaded 155-mm projectiles were suspended from a conveyer belt by means of a simple hook. If a worker accidentally bumped a projectile or secured it improperly, the consequences could be serious. In addition, up to 6 minutes passed before a detector set off an alarm. Although the detector system was adequate for monitoring prior to entry into the working area, it may require modification to reduce the lag time for on-line detection of agents.

Also, the up loading of chemical munitions will add considerably to the risk involved in their subsequent disposal as well as in the loading process itself and in storage.

SITE VISIT TO PINE BLUFF ARSENAL, ARKANSAS
JANUARY 25, 1984

The Pine Bluff Arsenal, which was constructed in 1942, is the only producing U.S. Army arsenal. It occupies 22 square miles of relatively flat land in a wooded area about 30 miles southeast of Little Rock. It is bounded by the Arkansas River to the north and east and the Missouri Pacific Railroad on the south and west. The winters are generally mild with only occasional subfreezing periods; the summers are hot and frequently humid.

The nearest city is Pine Bluff, which extends almost to the arsenal on the south. Arsenal personnel and their dependents total about 5,000 persons.

Mustard was shipped to the Pine Bluff Arsenal as bulk agent after World War II. It is stored in 1-ton containers, which are located in an open chemical exclusion area. Unlike other depots, such as Tooele, these containers are deployed in a single row rather than stacked.

All other chemical agents are stored in igloos except for the small amounts of agents undergoing testing, such as phosgene (CX). The latter are stored within the laboratory in a chemical exclusion area. Test quantities (about 1 liter) of GB and VX are actually shipped in from Aberdeen.

M55 rockets containing VX and GB, are kept in their shipping and firing tubes, and are stored 15 to a pallet. The VX rockets were filled at Newport, Indiana, and the GB rockets at the Rocky Mountain Arsenal in Denver, Colorado. Both rocket types were produced between 1961 and 1963, and were shipped shortly thereafter to Pine Bluff. Land mines were also shipped about this same time. The land mines are enclosed within their metal storage containers.

BZ is stored both in bulk containers and in munitions (M43 cluster bombs and M44 cluster generators), where it is blended with pyrotechnic material.

All the mustard containers were cleaned and repainted in 1980 and 1981. The mustard is still usable despite an accumulation of sludge. The panel was told it would take about two years, however, to develop and produce equipment for loading it into field munitions.

All VX- and GB-filled M55 rockets at Pine Bluff are now designated as unserviceable. Thus far, 39 GB rockets have been found to leak--they were disposed of by the drill and transfer team in 1981.

About 1 percent of the VX-filled M23 land mines at Pine Bluff were found to have defective bellville springs. Although this condition does not affect their serviceability, they were nevertheless set aside. All BZ stored at Pine Bluff has surpassed its shelf life and is not considered stable or effective any longer. It is scheduled for destruction when appropriate facilities become available in a year or two.

Possibly the most serious storage accident at Pine Bluff occurred in an igloo containing BZ in 1971. Lightning caused a fire that destroyed most of the igloo's contents. The resulting contaminated material is now stored in other igloos. The circumstances leading to this accident have been eliminated from other igloos by appropriate precautionary measures.

Significant Points

The Pine Bluff Arsenal is the only depot in which all of the Army's toxic chemical agents are stored in substantial quantities. In addition to producing colored smoke grenades, chemicals for screening smokes and incendiaries, and protective gas masks, Pine Bluff performs extensive testing on a continuing basis on all canisters and filters for masks. Pine Bluff also operates a mobile chemical laboratory known as SUPLECAM (Surveillance Program, Lethal and Chemical Agents and Munitions), which samples and tests chemical agents at other storage depots.

Pine Bluff also has primary responsibility for the Drill and Transfer System, which disposes of leaking munitions at other storage facilities by separating the chemical agent from the explosive. The chemical agent is transferred to a bulk container for storage in a designated igloo and the explosives are destroyed by detonation.

Pine Bluff will also have a facility for destroying BZ and another facility for producing difluoro binary component by 1986.

Because of the breadth of responsibility for manufacturing and testing a variety of chemical agents, Pine Bluff Arsenal probably has the most experienced personnel for chemical weapons in the U.S. Army.

Comments and Suggestions

Pine Bluff's security and surety operations appear to be good and comparable to Tooele. Both these installations, however, are susceptible to individuals cutting through the perimeter fence and to suicidal air attack, particularly since the air spaces over the depots are not restricted. Although there is a double fence around the exclusion area, the exit still has only a single fence, making forced entry by a fast-moving vehicle possible.

Because of the heavily wooded pine forest around the Pine Bluff depot, there is some concern that a fire could generate sufficient heat to cause the storage containers and munitions to rupture, which, in turn, might release large quantities of chemical agent into the air.

There is also a remote possibility for theft of a chemical agent in the testing laboratory. Each agent is carefully weighed and logged in before it is transferred to a container or "generator" in a constant temperature bath. Similarly, all quantities of agent removed from the bath for testing are carefully monitored. Still, the amount remaining in the bath at any particular time is not measured directly because of the potential hazard of transferring it from the bath to the weighing container and back.

The igloos at Pine Bluff, like those at all other depots, are continuously monitored only when they are to be inspected. Consequently, since there could be a delay--amounting to a matter of months--in discovering a leaking agent, continuous monitoring is advisable.

SITE VISIT TO PUEBLO ARMY DEPOT ACTIVITY, COLORADO
FEBRUARY 15, 1984

The Pueblo Depot lies on rolling prairie land just north of the Arkansas River and 14 miles east of the city of Pueblo, Colorado. Established in 1941, the depot now comprises about 38 square miles. There are several population centers nearby. The largest is Pueblo with more than 100,000 people. Four other towns within a 22-mile radius have populations of 1,000 to 8,000, while two others have less than 1,000.

The Pueblo area is well served by road, rail, and air transportation. The depot is linked to Pueblo by U.S. 50, a 4-lane expressway, which also passes the airport. The airport can accommodate jumbo jets, such as the Boeing 747 and the C-5, as well as other commercial and civil aircraft. Three major rail lines pass just south of the depot, which is connected to these lines by a spur.

The depot lies on an erosional remnant of an extensive alluvial terrace. These deposits are underlaid by shale, which extends downward to 2,000 feet. Southeastern Colorado is located in a seismic risk zone, one where earthquake damage would be expected to be minor. An earthquake, which measured 4.0 on the Richter scale, occurred near Pueblo in 1967. No known faults underlie the depot itself.

Elevation ranges from 4,814 feet in the northwestern part of the depot to 4,474 near the southeastern boundary. There are no natural or perennial streams within the depot and surface waters flow only after rainfall or snowmelt. The climate is semiarid with low humidity (41 percent average), abundant sunshine (74 percent average), and low precipitation (11.5 inches annual average). Very strong winds are most common in late winter and early spring, and usually blow from the North and West.

At the present time, the Pueblo depot stores, disposes of, and renovates ammunition. It also stores munitions and maintains certain equipment and components, such as the Pershing missile ammunition.

Pueblo has 770 government employees, including about 270 in the chemical personnel reliability program. There are also five military personnel at the depot.

The chemical weapons stored at Pueblo include 4.2-inch mortar rounds, and 105-mm and 155-mm artillery projectiles, all containing mustard. No bulk stores are held at Pueblo. These munitions are stored in about 100 igloos in the chemical exclusion area in the northeastern corner of the depot. All were manufactured at the Rocky Mountain Arsenal in the 1950s, except for some of the 4.2-inch mortar rounds, which came from the Redstone Arsenal and date from 1953.

Currently, 46 percent of the 4.2-inch mortars are serviceable (Code A). No artillery projectiles are in Code A condition. Ninety-two percent of the 105-mm shells are Code G (missing a component) and 88 percent of the 155-mm shells are awaiting arrival of the Drill and Transfer System to be disposed of. The principal leakage problem seems to be seepage around the fuse well.

Pueblo follows the procedures outlined in the relevant Army regulations for conducting stockpile inspections and other aspects of chemical surety. They are very similar to those at Tooele, to which Pueblo is administratively responsible. For example, Pueblo has recently begun using bubbler units to detect low concentrations of chemical agent in the air. Pueblo also follows procedures for entering igloos and monitoring work areas in a similar fashion to that at Tooele.

No chemical munitions have been moved from Pueblo for 20 years. The depot has not experienced any accident or incident involving the transport of chemical munitions. However, in 1983 one worker received a mustard burn on the thumb while attempting to plug a leaker.

Significant Points

There are two special features of chemical munitions storage at Pueblo. First, mustard is the only chemical agent kept at Pueblo. It is stored exclusively in projectiles. This significantly limits the severity of the maximum credible event and seems to limit the impact of this event to the confines of the depot itself.

Pueblo's second important feature is the size and layout of the exclusion area. Located on a flat desert terrain, it is laid out in a rough square about 6 miles on a side. A hardened tower is located at the entrance to the area and affords an excellent view of the entire block. This makes surveillance easier and reduces the chances of unauthorized entry.

Comments and Suggestions

The Pueblo depot is competently managed to conform with relevant Army regulations and procedures. Initially, the panel was concerned that the depot was overly dependent on nearby Fort Carson for such things as security and medical support in case of emergencies. In view of the proximity of Fort Carson, however, and further information regarding the speed of response and degree of planning already demonstrated, this concern was allayed.

Several concerns that originally surfaced at other depots reemerged at Pueblo. For example, the medical personnel at several depots are not trained for dealing with toxic chemical casualties until they have been at the depot for 2 to 6 months. This was the case at Pueblo. It may be due, in part, to the lack of emphasis placed on chemical injuries by the Army's Health Services Command at military hospitals outside of storage facilities.

Taking into account the local geography, the nature and storage conditions of the stockpile, and the practices, procedures, and competency of the command, the panel felt there to be relatively modest risks from maintaining the stockpile at Pueblo in its present state. It seems clear, however, that circumstances may require markedly increased and expensive security measures at all storage depots for chemical weapons. If the Army regards substantial portions of the mustard to be obsolete, the time might not be appropriate for making major improvements in security arrangements at Pueblo. An alternative would be to consolidate stocks, thereby minimizing security costs.

C

Stockpile Assessment Panel Questionnaire

NATIONAL RESEARCH COUNCIL
COMMISSION ON ENGINEERING AND TECHNICAL SYSTEMS
[illegible] Washington, D.C. [illegible]

[illegible]

October 28, 1983

COMMITTEE ON DEMILITARIZING CHEMICAL MUNITIONS AND AGENTS

STOCKPILE ASSESSMENT PANEL

SITE QUESTIONS

The Stockpile Assessment Panel of the Demilitarization Committee has developed the following questions to be reviewed with the appropriate staff at each facility. A short, concise written response is requested.

1. For chemical agents and bulk munitions stockpiles:

   a. What is the basis for determining the condition (obsolete or deteriorating) of stocks?

   b. What is the method and schedule for surveillance?

   c. What are the security procedures?

2. What is the history of storage of chemical agents at the facility?

3. Where and when were the stockpiles manufactured?

4. What is the policy for personnel associated with chemical agents? including:

   a. number, education, rotation;

   b. military/civilian/contractor status;

   c. extent of security clearance at facility;

   d. authorized vs. actual staff level;

   e. qualifications of commander and other management.

The National Research Council is the principal operating agency of the National Academy of Sciences and the National Academy of Engineering to serve government and other organizations.

5. What is the procedure and frequency of transporting munitions and bulk agents on/off site? including:

a. incident/accident history during the last two years;

b. security during each move;

c. availability of emergency medical, firefighter, etc. personnel.

6. Present a short public affairs history for the site/facility including all local/state/regional concerns or problems and a command brochure or other public literature.

7. Present a summary of the operating budget requested, authorized, and appropriated in direct support of the chemical munitions program and operations for each site for FY 82-85.

8. What contingency plans for an incident/accident have been developed? including:

a. for on-site personnel;

b. availability of off-site assistance;

c. impact on the surrounding community.

9. What are the applicable local/state laws relating to chemical storage under which the facility must operate?

10. What is the proximity of non-chemical ammunition stocks stored at the facility? What hazards or procedures associated with them may affect the safety of the chemical munitions and bulk agents?

11. What periodic reports or special studies or inspections of the stocks have been completed during the last two years (including reviews by the Army, DOD, GAO, other)? Provide copies.

12. What are the detailed operating procedures for handling leakers? including:

a. disposition;

b. monitoring methodology;

c. statistical analysis of leakers by type, lot, age, etc..

13. Describe the present medical monitoring program for workers potentially exposed to agent and a history of the change in this procedure during the last five years.

14. Describe the present environmental monitoring program and a history of the change in this program during the last five years.

15. Provide a map and aerial photograph of the site/facility and information concerning the surrounding region including:

a. location, density of population;

b. transportation routes via air, road, water;

c. geophysical, climatological, seismic data;

d. industrial facilities and operations; and

e. land use patterns (agriculture, grazing).

16. If an accident involving chemical munitions were to occur:

a. What population groups, on/off the facility, would be the primary target for protection?

b. What dose response and exposure assessment will be used?

c. How would calculations of wind dispersion or water seepage be determined?

d What are the biological/chemical and statistical uncertainties in estimating the impact?

D

Typical Response to Questionnaire

The Stockpile Assessment Panel of the Demilitarization Committee has developed the following questions to be reviewed with the appropriate staff at each facility. A short, concise written response is requested.

1. For chemical agents and bulk munitions stockpiles:

a. What is the basis for determining the condition (obsolete or deteriorating) of stocks?

PBS does not determine obsolescence, however, based upon inspection criteria of SB 742-1 Quality Assurance Specialist (Ammunition Surveillance) (QASAS) assigned to Pine Bluff Arsenal make determinations on condition of munitions/containers in consideration of deterioration factors detected during periodic/cyclical surveillance.

b. What is the method and schedule for surveillance?

(1) Method: BZ Munitions and Bulk Agent, HT/HD Bulk Agent (Ton Containers), VX M23 Land Mines and VX M55 Rockets, and containers of RDT&E agents are subjected to cyclical visual inspection; GB M55 rockets are cyclically air tested utilizing detection equipment.

(2) Schedule: All chemical munitions and agents are inspected on a cyclical basis throughout the year using lot sampling criteria prescribed by SB 742-1. It should be noted that storage igloos are entered from 5-7 times annually to accomplish surveillance operations, magazine inspections, or periodic security checks.

c. What are the security procedures?

Each storage structure is secured with two high security locks. A security guard must obtain a separate key for one lock which is assigned to Security personnel; an individual from the operational element must obtain a separate key for the second lock which is under control of the operational element—this allows enforcement of the two-man rule which must be followed in opening the structure. In addition, specific igloo opening and closing procedures must be followed since the structures are protected by an Intrusion Detection System. The Chemical Exclusion Area within the chemical laboratory facility requires two individuals—a security guard and an individual from the operating element—to open the outer door of the laboratory, and two operating personnel to open each of the dual locks which secure each hood within which chemical surety material is stored.

2. What is the history of storage of chemical agents at the facility?

HT/HD Ton containers of bulk agent have been stored at the installation since WWII. Stocks of M55 GB/VX Rockets and VX M23 land mines were shipped to PBA during the 1963-1966 time frame from off-post production sites. BZ munitions/agent have been in storage at PBA since their manufacture in the 1962-64 time period.

3. Where and when were the stockpiles manufactured?

a. HT/HD Ton Containers: PBA was a manufacturing site for mustard filled munitions during WWII; these containers/agents were shipped in from off-post sites during the post WWII era. The manufacturing site is not known.

b. GB M55 Rockets were produced at Rocky Mountain Arsenal, Colorado during the 1961-1963 time period.

c. VX M23 Land Mines and VX M55 Rockets were produced at Newport Army Ammunition Plant, Indiana during the 1961-1962 time period.

d. BZ Munitions (M43 Cluster Bombs and M44 Cluster Generators) were produced at PBA during the 1963-1964 time period. The bulk BZ Agent was commercially procured.

4. What is the policy for personnel associated with chemical agents? including:

a. Number, education, rotation: A total of 346 Pine Bluff Arsenal employees are on the Chemical Surety Position Roster, indicating that they require and have been approved for routine access to Chemical Surety Materiel under the two-man concept, or routine unescorted entry into a Chemical Exclusion Area. The education of these employees varies from less than high school, for some of the blue collar employees, to more than a baccalaureate degree for some of the administrative and professional employees. Rotation practices also vary widely; some groups such as Security Guards are regularly rotated among physical locations and job assignments whereas other groups, such as specialized craftsmen, concentrate on specific equipment at a few locations. QASAS personnel are included in a worldwide rotation program.

b. Military/civilian/contractor status: Military and civilian personnel are cleared under the provision of the Chemical Personnel Reliability Program; contractor personnel are always escorted by a properly cleared Arsenal individual.

c. Extent of security clearance at facility: PBA is classified as a controlled post and assigned military/civilian personnel are granted security clearances based upon individual job requirements. As a general rule, security guards possess a secret clearance.

d. Authorized vs. actual staff level: Priority in recruitment action is given to key position vacancies. Management endeavors to maintain strength at authorized levels in security, storage and chemical laboratory operating elements due to the critical nature of the work.

e. Qualifications of commander and other management: Personnel must be qualified under the provisions of Chapter 3 to AR 50-6, Chemical Personnel Reliability Program.

5. What is the procedure and frequency of transporting munitions and bulk agents on/off site? including:

GENERAL COMMENT ON FREQUENCY: PBA requests and receives small RDT&E quantities of chemical agent 2-3 times annually from the Chemical Research and Development Center at Aberdeen Proving Grounds, Md., to support laboratory serviceability testing workload.

a. Incident/accident history during the last two years: There have been no incidents/accidents.

b. Security during each move: Technical Escort personnel provide security to the area municipal airport, augmented by PBA DAC guards when the agent is transported to the Arsenal either by air or ground convoy.

c. Availability of emergency medical, firefighter, etc. personnel: The Arsenal's trained medical, NBC, Fire and Rescue and Security teams are available for response on a 24-hour basis and are placed on alert during each movement.

6. Present a short public affairs history for the site/facility including all local/state/regional concerns or problems and a command brochure or other public literature.

Pine Bluff Arsenal is a multi-mission installation with responsibility for production engineering and technology, laboratory, and storage activities. It is the only active Army installation within the state, and is one of the three leading employers in the geographical area. The Arsenal maintains excellent relations with the business community, and receives solid citizen support for its defense mission. Due to the Arsenal's unique role and continued mission growth both in the conventional and chemical areas, programs and projects which affect the installation, receive broad news coverage which keeps the public informed on the Arsenal and its mission. A summary and brochure is enclosed as Enclosure #1 [not reproduced here].

7. Present a summary of the operating budget requested, authorized, and appropriated in direct support of the chemical munitions program and operations for each site for FY 82-85.

(NOTE: Funding data presented below is for the identifiable major elements of work related to the CSM Stockpile. Figures presented are the same for funds required, authorized and appropriated except for FY 84 where an additional $500K has not yet been authorized for surety support but is soon expected to be.)

ACTIVITY	YEAR(S) 82	83	84	85
Surety Support (Security, IDS)	4,358	5,310	5,128	5,640
CSM Surveillance	870	907	1,478	1,626
CSM Inventory	142	249	212	233
BZ Disposal	857	201	719	1,700

8. What contingency plans for incident/accident have been developed? including:

The Arsenal maintains a Chemical Accident/Incident Control Plan (CAICP) which is officially designated as Annex C to the PBS Disaster Control Plan (DCP) which provides direction and guidance for responding to any on/off post accident/incident. Periodic tests of emergency procedures contained in this plan are conducted to evaluate adequacy and effectiveness.

a. For on-site personnel: All installation elements participate in periodic post-wide training/test exercises of emergency procedures. A trained complement of military/civilian personnel are specially trained in security, medical, detection and decontamination procedures and have the capability to be deployed to any emergency site. A system of duty and non-duty hour notifications is developed to assure timely responses. Personnel not required to participate in emergency actions are provided instructions on specific personnel protective measures required.

b. Availability of off-site assistance: PBA maintains signed Memorandums of Understanding with area Health, Hospital, Law Enforcement, Civil Defense and other governmental agencies which provide for rendering support in areas of mutual interest.

c. Impact on the surrounding community: The Arsenal maintains a close relationship with area municipal civil defense officials to assure that contingency plans are workable if implementation is required. Periodic test exercises conducted include off-post hazards and coordination with key officials who have the responsibility for off-post notifications and evacuations. Based upon these factors the Arsenal considers that although a potential hazard exists, the safety of personnel can be maintained.

9. What are the applicable local/state laws relating to chemical storage under which the facility must operate?

There are no mandated regulatory controls applicable to accomplishing the on-going storage and laboratory mission.

10. What is the proximity of non-chemical ammunition stocks stored at the facility? What hazards or procedures associated with them may affect the safety of the chemical munitions and bulk agents?

The installation's Chemical Exclusion Area contains 86 storage igloos, 3 of which contain conventional white phosphorous smoke munitions. These pose no significant hazard to the chemical munition in storage due to the quantity distance factors. Other conventional material stored exterior to the Chemical Exclusion Area similarly poses no hazards due to this same factor.

11. What periodic reports or special studies or inspections of the stocks have been completed during the last two years (including reviews by the Army, DOD, GAO, other)? Provide copies.

a. A 100% screening of the M23 VX Land Mine stockpile for detection of any Bellville Spring problems was conducted during the course of a stockpile maintenance project during the period January - May 1982. No specific report was prepared but 100 munitions were identified with this problem and set aside.

b. A representative from the DOD Explosive Safety Board (DDESB) performed a safety survey at PBA during the period 19 - 22 October 1982 which included an examination of selected storage igloos and contents. There were no significant deficiences noted.

12. What are the detailed operating procedures for handling leakers? including:

Leaking munitions are processed IAW approved SOP's for the individual items and are given priority of attention. Basically the container, if repairable, is immediately repaired and if munition or container requires overpack, this is immediately done IAW applicable regulations.

a. Disposition: PBA has had no leakers which required emergency destruction. Thirty nine leaking M-55 GB rockets were disposed of during the DATS operation conducted at PBA in FY 81. These leakers were discovered during the conduct of cyclical surveillance in preceeding years. When leaking valves and plugs on ton containers are discovered, they are either tightened or replaced--other leaking containers are overpacked.

b. Monitoring methodology: Munitions and containers are periodically monitored to assure no further deterioration of overpack containers.

c. Statistical analysis of leakers by type, lot, age, etc.: This is accomplished at Headquarters AMCCOM since other storage sites have lots similar to PBA.

13 Describe the present medical monitoring program for workers potentially exposed to agent and a history of the change in this procedure during the last five years.

Medical monitoring program for workers potentially exposed to agent is in accordance with DA Pam 40-8 (Chpater 3 and Appendix D) and Letter, DRCSG-O, 6 June 1983, Subject: Medical Surveillance of Personnel Potentially Exposed to Cholinesterase Inhibiting Substances. This requires the recording of time that operating personnel are potentially exposed and these records will be maintained for 40 years. This procedure was instituted in September 1982. Prior to that time, a log of entry/exit times at exclusion areas was maintained and all workers observed by the supervisor for symptoms prior to leaving the installation.

14. Describe the present environmental monitoring program and a history of the change in this program durig the last five years.

a. First entry monitoring is required prior to entering storage, operational areas, and agent laboratories utilizing approved detecting equipment and procedures. Continuous monitoring of the storage/work sites while personnel are present at the site. Monitoring is accomplished by the following approved monitoring detectors:

(1) M-8 alarms

(2) Components of M-18 kit i.e.

(a) Enzyme tickets

(b) Detector tubes

(c) M-8 paper

(3) Bubbler sampler (absorption air sampling) for H, G, VX agents

(4) Real time monitors

(5) Swab tests for BZ Agents (Ethylene glycol, 1 swab per 1 sq. ft.

(6) Visual observation for agent leakage

b. Laboratory operations with chemical agents require engineering controls (fume hoods, glove boxes) with constant monitoring of laboratory.

c. Monitoring of work areas where unprotected personnel perform duties must be accomplished by detectors capable of detecting to 0.0001 mg/m^3 for GB and 0.00001 mg/m^3 for VX and 0.003 mg/m^3 for H agent. This is accomplished at PBA by use of bubbler samplers.

15. Provide a map and aerial photograph of the site/facility and information concerning the surrounding region including:

a. Location, density of population: The installation's post population includes approximately 115 assigned military and 1,315 civilian employees in addition to approximately 120 military dependent personnel who reside on-post. The majority of the workforce perform their duties within buildings/structures located generally in the south and north post sections. An installation map is enclosed as Enclosure #2.

b. Transportation routes via air, road, water: The Arsenal is served by two major railway lines and commercial truck carriers. Quick access to major U.S. highways is available, and a U.S. Air Force Base is easily accessible by this highway system. A nearby municipal airport can accommodate military fixed and rotary wing aircraft. Commercial air transportation is obtained through the municipal airport at nearby Little Rock, AR.

c. Geophysical, climatological, seismic data: The Arsenal is situated on the interfix of the Mississippi Alluvial Plain and the Gulf Coastal Plain; its eastern perimeter is generally a bluff area facing the east, which is adjacent to the Arkansas River. The installation's elevation is approximately 250' but varies between 212-280' in the south and north post sections. Average annual daily temperatures are maximum 72.6 and minimum 49.3. The summer season is marked by prolonged periods of warm/humid weather; the winter season is generally mild but with occasional outbreaks of polar conditions.

d. Industrial facilities and operations: Pine Bluff Arsenal operates facilities for the production of smoke, pyrotechnic, incendiary and civil disturbance minutions and pollution abatement facilities in support of this mission. An incinerator complex for the disposal of non-lethal chemical materiel is also operated. Other capabilities include maintenance shops, a chemical laboratory, production engineering facilities and a variety of logistical support facilities.

and, e. Land use patterns (agriculture, grazing): The installation is generally divided into the three areas of production, administrative and depot supply; however, other support functions (including logistics, maintenance and tenant activities) are interspersed in these areas of the Arsenal's near 14,500 acres, approximately 10,000 is tree covered and included in a Woodland Management Program. Several recreational areas are available on the post for fishing, outdoor sports, picnic activities and other purposes. Hunting is also authorized on the post. No commercial outlease of Arsenal acreage is accomplished for any purpose.

16. If an accident involving chemical munitions were to occur:

a. What population groups, on/off the facilitiy, would be the primary target for protection?

The installation's emergency response is primarily geared to reacting to the maximum credible event (MCE) which at Pine Bluff Arsenal is the hazard associated with a fire occurring in a GB M55 Rocket storage igloo. The resulting 2,529 meter downwind hazard associated with this MCE is plotted on an "All directional wind" basis to identify both the on-off post population that would be within the hazard-zone. On this basis, military occupants of family quarters, and private citizens residing adjacent to he installation's western perimeter would be primary targets.

b. What dose response and exposure assessment will be used?

The installation's hazard analysis is based upon guidance contained in Technical Data Paper #10 which addresses the LD lethality values for the agents stored at PBA. The exposure index employed in this report is the concentration time interval expressed in mgm/m^3.

c. How would calculations of wind dispersion or water seepage be determined?

The Arsenal's Operations Center, which functions during both normal and emergency operations, is equipped with real time weather monitoring instruments which are continually monitored to maintain current status of meteorological conditions--verifications of this data is made by comparisons with other instrumentation installed at various locations on the Arsenal and by contacting the nearby FAA facility. The hazard analysis computed for the specific emergency is based upon this data and is revised as conditions change. If water seepage is a factor, the installation's Environmental Coordinator is knowledgeable of data pertinent to this issue and prepared to furnish any required technical assistance in effecting response actions.

d. What are the biological/chemical and statistical uncertainties in estimating the impact?

The installation's hazard analysis program is based upon the guidance provided in Technical Data Paper #10 and is contained in the installation's computer program system. The input of variables into this program will be based upon the specific type of emergency and reliable informational sources; accordingly, the resulting hazard analysis will be highly accurate.

E

Legal Constraints

The following laws and regulations affect the Army's options for destroying chemical weapons and agents (Document 139):

1. National Environmental Policy Act, 1969 (NEPA) (PL 91--190).

   a. Requires preparation of Environmental Impact Statements (EIS) for major federal actions significantly affecting the environment.
   b. Created the Environmental Protection Agency (EPA) and Council on Environmental Quality (CEQ).

2. Air

   Clean Air Act, 1977 (PL 95-95). Establishes:

   a. National primary and secondary ambient air quality standards (primary is for protection of public health [i.e., man]; secondary is for protection of public welfare [i.e., soil, vegetation]).
   b. National emission standards for hazardous air pollutants (NESHAP) for EPA-promulgated hazardous pollutants.
   c. State implementation plans.
   d. New Source Performance Standards (NSPS) applicable to specific industries.
   e. Auto emission controls.

3. Water

   Water Quality: Clean Water Act, 1977 (PL 95-217).

   a. Promulgates national pollutant discharge elimination system.
   b. Establishes water quality criteria.

Water Supply: Safe Drinking Water Act, 1974 (PL 95-523)

a. Establishes national drinking water regulations to be implemented and enforced by the states.
b. Reproposes rules, governing protection of drinking water through application of:

   (1) Primary drinking water standards applicable to contaminants that may have adverse effect on man's health.
   (2) Secondary drinking water standards that are required to protect the public welfare (i.e., odor, taste).

4. Hazardous Wastes

Resource Conservation and Recovery Act, 1976 (PL 94-580).

Establishes solid waste management information and guidelines as follows:

a. Hazardous waste, defined in Section 261.3.
b. Standards applicable to generators of hazardous waste.
c. Standards applicable to transporters of hazardous waste.
d. Standards applicable to owners and operators of hazardous waste treatment, storage, and disposal facilities.
e. Permits for treatment, storage, or disposal of hazardous waste.

Recent review of regulations by the Environmental Protection Agency (EPA) (46 FR 56582-89) November 17, 1981.

a. EPA excludes certain types of mixtures of hazardous wastes:

   (1) K044: Wastewater treatment sludges from the manufacturing and processing of explosives.
   (2) K045: Spent carbon from the treatment of wastewater containing explosives.
   (3) K047: Pink/red water from TNT operations.

b. Revised law requires that the mixture itself be tested to determine whether it exhibits the characteristic of hazardous waste, and that the mixture be excluded if the combined concentrations in the resulting mixture are "no greater than 1 or 25 ppm."

Comprehensive Environmental Response, Compensation, and Liability Act of 1980 (CERCLA) ("Superfund") (PL 96-510)

a. Defines hazardous substances.
b. Designates reportable quantities as 1 pound.
c. Excludes from the definition of hazardous substances:

(1) Natural gas.
(2) Liquified natural gas or synthetic gas usable for fuel.
(3) Any person who causes release of a hazardous substance shall be liable for the cost of cleanup and for damages to natural resources.
(4) Pays for cleanup costs and removal measures, and may seek reimbursement from persons releasing the hazardous substance.
(5) Cannot pay for personal injury or other third-party damages.

Toxic Substances Control Act (TSCA), 1976 (PL 94-469).

a. Authorizes the federal government to require testing and to regulate problem chemicals well before they reach the production phase.
b. Its regulatory features include:

(1) Acquisition of sufficient information by EPA to identify and evaluate potential hazards from chemicals.
(2) Regulating the production, use, distribution, and disposal of such substances where necessary.

c. Sets up premarket notification.

Ocean Dumping: Marine Protection, Research, and Sanctuaries Act, 1972 (PL 92-532).

a. Section 101: No person, except by permit, is allowed to transport from any location any radiological, chemical, or biological warfare agent, or any high level radioactive waste for the purpose of dumping it into ocean waters. However, no permit could be issued by the EPA for "dumping of herbicide compounds intended for use in warfare activities" and "nerve gases."
b. Declares that unregulated dumping of material into ocean waters endangers human health, welfare, and amenities, and the marine environment, ecological systems, and economic potentialities.
c. Specific permit conditions are outlined in Section 103(a).

5. Lethal and Nonlethal Chemical and Biological Agents

Public Law 91-121, 1969 (Armed Forces Appropriation Authorization, 1970, which also provides for transportation and/or storage of chemical and biological weapons).

a. Prohibits use of authorized funds for the transportation and testing of lethal and nonlethal chemical and biological agents

unless the secretary of defense has determined that the proposed action is in the best interests of national security.

b. Requires that the particulars of the proposed transportation or testing are made available to the then Secretary of Health, Education, and Welfare (now Health and Human services) for review and, if necessary, the recommendation of precautionary measures to protect public health and safety.

c. Requires notification of the President of the Senate and Speaker of the House of Representatives at least 10 days before any such transportation and at least 30 days before any such testing will commence, and to the governor of any state through which agents will be transported, in advance of any such transportation.

d. Restricts foreign development, storage, testing, and disposal if such violates international law.

e. Does not restrict transportation and disposal of research quantities or in an emergency when human safety is threatened.

Public law 91-441, 1970 (Armed Forces Appropriation Authorization, 1971, which provides for disposal of toxic chemical and biological weapons).

a. Amends PL-91-121 to include disposal.

b. Prohibits disposal of chemical and biological agents within or outside of the United States unless they have been detoxified or made harmless to man and the environment, except in an emergency to safeguard human life. An immediate report should be made to Congress in the event of such disposal.

c. Prohibits disposal of any munitions in international waters.

Public Law 91-672, 1971 (Foreign Military Sales Act - Amendment, which prohibits the transaction of chemical munitions into the United States from Okinawa.)

a. No funds are authorized for purpose of transporting chemical munitions from Okinawa to the United States.

b. Such funds as are necessary for the detoxification or destruction of these chemical munitions are authorized and shall be used for the detoxification or destruction of chemical munitions only outside the continental United States.

6. Occupational Health

Occupational Safety and Health Act (OSHA), 1970 (PL 92-596).

a. Threshold limit values represent conditions under which "nearly all workers may be repeatedly exposed day after day without adverse effect."

b. These limits are set forth in a booklet that is printed yearly by the American Conference of Governmental Industrial Hygienists.
c. Limits are based on the best available information from industrial experience, from experimental human and animal studies, and, when possible, from a combination of the three.

7. Annexes

USATHAMA Memorandum No. 200-2.
States USATHAMA policy, provides guidance, assigns responsibilities, and establishes procedures for the preparation of environmental documentation in accordance with NEPA.

Dept of Army Regulation No. 200-10.
Explains the Army environmental program, defines program objectives and policies, and assigns responsibilities for program management in support of the national programs for environmental protection, enhancement, and evaluation.

8. The Hazardous Materials Transportation Act of 1974 (HMTA) (Public Law 93-633) is also relevant. The law seeks to "protect the Nation adequately against the risks to life and property which are inherent in the transportation of hazardous materials in commerce." Under this act, the Department of Transportation must:

a. Designate particular quantities and forms of materials as hazardous;
b. Issue regulations for safely transporting hazardous materials in commerce;
c. Establish a register of hazardous materials transporters or those who cause such materials to be transported in commerce;
d. Administer exemptions and exclusions, and civil and criminal penalties.

HMTA is enforced through the Code of Federal Regulations, Title 49, Parts 100-199. These regulations do not apply to federal, state, or local governments that transport hazardous materials using their own employees, vehicles, and facilities. However, the existence of these regulations can be viewed to provide minimum safety guidelines for such government transporters.

F

Overview of Some Proposed Thermal Technologies

The conventional thermal processes and the "novel" processes suggested by USATHAMA contractors as having potential for disposal of chemical munition and agent stockpiles are noted in Table 13. In this appendix, the Technology Assessment Panel briefly summarizes the operational characteristics of the most promising processes.

The only two conventional thermal processes that can dispose of munitions without substantial downloading or preprocessing operations are the acid roaster and the thermal tower. In the acid-roaster concept, separate whole munitions are eroded in an acid bath to free the chemical agents from the explosives and propellants. The resultant slurry is "roasted" to destroy the agent and explosive materials, and to recover acid gases for recycling to the acid bath.

While this scheme offers some attractive features, adequate data are not currently available to determine the time required to dissolve the munitions in the acid bath or to insure that there will be no explosions in the dissolution tanks. Additional laboratory tests would be required to support a judgment on the potential benefits of this system. The acid-roaster concept appears to have a high level of risk for economic development within a 5 year period.

The thermal tower, which is in a preliminary stage of development, includes a large-volume chamber capable of processing one full pallet of munitions at a time. Localized heating in the chamber would be used to set off the explosives and gain access to the agent. The system would be designed to withstand repeated blast waves and the high velocity flying shrapnel that are associated with the detonation of explosives.

In addition to agent vapors, other gases might come from burning of propellents and explosives, and from pyrolysis of dunnage and munition fiberglass. All gaseous effluents would be decontaminated in a rich-fume incinerator. Solid products from the thermal process might include metal parts, fiberglass, and dunnage. Such solids would be heated to at least 538°C before being discharged from the system. This concept also has a high level of technical risk for economic development within the next 5 years.

Four of the 10 suggested conventional processes (see Table 13) incorporate well-established rotary kiln incineration in one form or another. In fact, JACADS and the Expedited M55 Rocket/M23 Land Mine Projects are designed to use rotary-kiln incinerators. Two questions, however, need clarification: (1) the definition of a kiln refactory material that resists agent corrosion from agents or the highly corrosive combustion products, and (2) the design of rotary seals to minimize kiln maintenance problems.

The fluidized bed process incorporates a bed of granular material as a mixing and resident chamber for a mixture of air, agent, metal parts, dunnage, and auxiliary fuel. It would burn preprocessed (maximum fragment size in the range 3 to 6 inches) munitions in the bed where the materials to be incinerated and/or decontaminated would be subjected to the turbulence, mixing, and heat exchange in the bed that should result in rapid combustion. Exhaust gases that leave the bed surface would be delivered to particulate-removal facilities. Acid-gas removal might be accomplished directly in the bed if an appropriate bed material can be found. The scheme has several advantages over other thermal processes, but technological risks and knowledge gaps may be too great for developing an economical and reliable system within the next 5 years.

The pusher-hearth concept would process all munitions in a single furnace, coupled with the same pollution control equipment now used in the Army's baseline system. This system features a simplified "front-end" arrangement in which munitions would be loaded on a tray partially filled with water. The water could serve two functions: it could allow punching of munitions packages to gain access to the agent, and it could act as a thermal sink during propellant burning. Rapid heat release could, therefore, be reduced and localized hot-spots eliminated during propellant combustion. The tray containing munitions would be pushed into an indirectly heated furnace for heating of agent and explosives. An incinerator would be used to destroy the pyrolyzed agent vapors as well as the decomposition products from the explosives and propellants. The concept shows promise, but additional work would be required to eliminate the potential for detonation in the hearth and to obtain a clear determination of life-cycle operating costs.

The molten metal process is designed to pyrolyze and incinerate agent, explosives, and propellants, yielding a molten metal and fused salt product. The process accepts either punctured whole munitions or munitions that have been cut into pieces. This system, which incorporates a novel technology with a number of knowledge gaps, appears to have a high degree of risk and does not have a high probability of development within 5 years.

The pyrolysis/molten salt concept seems to be relatively flexible. It could be capable of receiving munitions that have undergone a variety of kinds of preprocessing, including having both the agent cavity and explosive burster well penetrated or exposed. This complex, novel technology is poorly understood and has several knowledge gaps. It is not recommended for implementation at this time.

Of the proposed novel concepts that were reviewed, the in-shell combustion concept has the highest merit and should be considered for development. In-shell combustion is designed to handle several munitions simultaneously after their bursters have been removed. Individual oxygen-acetylene torches would be inserted into empty burster wells of munitions that had been placed in a combustion chamber. Each torch would pierce the burster well to expose and burn the agent inside. Each munition would act as an individual combustion chamber in which the agent would be incinerated. Such a system could also incorporate an afterburner chamber to collect combustion products and provide sufficient residence time and temperature to ensure destruction of any residual agent vapors. The exhaust gases leaving the afterburner could be dealt with by appropriate air-pollution control equipment.

This concept offers a number of advantages, including: (1) high processing rate, (2) minimal preprocessing, (3) the possibility of being trailer-mounted so that the system could be moved from one depot to another, and (4) the possibility of lower life-cycle operating costs. This concept might also be useful for decontaminating bulk containers (see Chapter 16).

Additional work is required to learn more about gaining access to the agent cavity with a torch and the degree of agent destruction within the munition before a reliable judgment can be made concerning the technological risk involved.

G

Elements of a System Safety Program

HAZARD ANALYSIS

Preliminary Hazard Analysis

A Preliminary Hazard Analysis is a comprehensive, qualitative safety evaluation of a complete system. It seeks to provide the initial safety evaluation of that system, to identify potentially hazardous or safety-critical aspects of the total program, and to formulate the safety parameters that guide all other program tasks. It identifies sources of hazards and the various means for controlling them. The analysis should be performed as early in the life cycle as possible and consider all hazards that might occur in operating the disposal system. By listing the hazards as early as possible, problems can be resolved during system design.

Subsystem Hazard Analysis

A Subsystem Hazard Analysis is an expansion of the Preliminary Hazard Analysis. It provides a more detailed look at each subsystem to determine what hazards, if any, are present and determines the result of component failure. The hazards found can then be eliminated or controlled.

System Hazard Analysis

A System Hazard Analysis is performed to determine the hazards present in a complete system. In particular, it investigates hazards that might exist at the interface between subsystems since malfunctions or failures in one subsystem might produce hazardous effects in another.

---

*Material contained in this Appendix is based on Rankin, 1978, DARCOM-R 385-23, and MIL-STD-882, 882A, and 882B.

After identifying possible hazards, the analysis indicates what action should be taken to either eliminate or control them.

Operating and Support Hazard Analysis

An Operating and Support Hazard Analysis identifies and evaluates hazards resulting from operations or tasks performed by humans. It should consider:

a. The planned system configuration or state at each phase of activity;
b. The facility interfaces;
c. The supporting tools or other equipment specified for use;
d. Operational or task sequence, concurrent task effects, and limitations;
e. Biotechnological factors, regulatory or contractually specified personnel safety and health requirements;
f. The potential for unplanned events including hazards introduced by human errors.

It should identify:

a. Activities that occur under hazardous conditions, their time periods, and the actions required to minimize risk;
b. Changes needed in functional or design requirements for system hardware and software, facilities, tooling, or support and test equipment to eliminate hazards or reduce associated risks;
c. Requirements for safety devices and equipment, including personnel safety and life support equipment;
d. Warnings, cautions, and special emergency procedures (e.g., egress, rescue, escape, render-safe, and back-out);
e. Requirements for handling, storage, transportation, maintenance, and disposal of hazardous materials;
f. Requirements for safety training and personnel certification.

Maintenance Hazard Analysis

The Maintenance Hazard Analysis is performed to identify hazards associated with system maintenance. It helps to ensure safe maintenance procedures.

Occupational Health Hazard Assessment

An Occupational Health Hazard Assessment identifies and documents health hazards and proposes protective measures to reduce associated risk to an acceptable level. The health hazards and recommended

engineering controls, equipment, and/or protective procedures are identified and recommended, including those for toxic materials and physical agents. System, facility, and personnel protective equipment design requirements to safe operation and maintenance are identified.

Training

Training is required to ensure that operating personnel can recognize types of hazards and know their causes and effects as well as preventive and control measures. Other important training topics include procedures, checklists, frequently encountered or likely human errors, safeguards, safety devices, protective equipment, monitoring and warning devices, and contingency procedures. The training task involves developing lesson plans and certification requirements, which incorporate the results of system and operating hazards analyses.

Software Hazard Analysis

A Software Hazard Analysis is performed to identify hazardous conditions incident to safety-critical operator information, command, and control functions identified by the preliminary, subsystem, system, and other hazard analyses. Software design is examined to identify unsafe, inadvertent command/failure-to-command modes for resolution. Safety critical operator information and commands are traced through flow charts, software and hardware specifications, and other applicable documentation. Methodology for such analyses are described in Marchant et al. (1984).

Hazard Tracking and Risk Resolution

The purpose of this element is to establish a hazard tracking system. It requires that a method or procedure be developed to document and track hazards from their identification through their elimination or until the associated risk is reduced to an acceptable level. This provides an audit trail for hazard resolutions. A centralized file or document called a "hazard log" is maintained. If an accident ever does occur, examining such records will help determine possible causes and identify corrective actions.

Management Oversight Risk Tree

The various system safety techniques listed in Table 14 should be applied to the entire scope of the program in a timely manner and throughout the entire life cycle of the system. The safety program

associated with the disposal of chemical weapons need not be limited to tasks identified in military documents. Thus, for example, the use of a Management Oversight and Risk Tree (MORT) can help to insure that there are no foreseeable management oversights.

The Department of Energy (DOE) and its predecessor agencies, the Atomic Energy Commission (AEC) and the Energy Research and Development Administration (ERDA), spent more than a million dollars developing and testing this comprehensive approach to safety (Johnston, 1980; System Safety Development Center, 1976, 1977a, 1977b). MORT is a formal, disciplined, logic or decision "tree" to relate and systematically integrate a wide variety of safety concepts and tools. This approach is referenced in recent safety textbooks (Peterson, 1980), most of which suggest similar systems-wide programs (Brown, 1976; Hammer, 1976; Hammer, 1980; Malasky, 1982; Tarrants, 1980).

System-safety programs exist to ensure the timely and effective application of safety techniques. The Army Safety Program, delineated in MIL-STD-882B and in the AR385 series of documents, is not as thorough as MORT in some respects. MORT provides the structure to which system safety techniques can be applied. However, it is important to distinguish between the program scope discussed above and analytic techniques, which are discussed below.

ANALYTIC TECHNIQUES

Various techniques are available to provide a disciplined approach to system-safety analysis. Their purpose is to predict hazards and accident potentials, and to provide insights into their amelioration by anticipating as many causes as possible. Even given the most thorough diligence and discipline, there is no guarantee that every potential cause of accidents will be anticipated. Nevertheless, a thorough program that applies proper techniques at the appropriate time will reveal aspects of design and procedures that might otherwise be overlooked.

The available techniques can be classified as either "deductive" or "inductive." Deductive techniques start with each undesirable event that is to be minimized or avoided and logically seek to determine how that event could occur. They proceed from the undesirable end events and terminate at the component failure level. Deductive techniques would identify single, dual, and other multiples of failures that provide paths to the undesired event. They can include human-operator errors as well as equipment or component errors. Thus, deductive techniques are called "top down" approaches. They can be quantified or not.

Inductive or "bottom-up" techniques start at the component level and proceed to the consequences of a given failure mode for a component. These analyses often involve estimates of the severity and frequency of the failure to evaluate its importance. For example, the

consequences of a pump failure can be traced to determine the severity of the failure, if it were to occur. The frequency can be estimated from the manufacture's reliability data.

A wide variety of detailed, analytical techniques are available for application to each specific situation. These include: operator workload analysis, energy-barrier analysis, change analysis, job safety analysis, operating hazard analysis, subsystem hazard analysis, sneak circuit analysis, fault tree analysis, Boolean mapping, failure mode and effects criticality analysis, interface analysis, and extreme value analysis, among others (Rankin, 1978; Johnson, 1980).

To use only an inductive or only a deductive technique would be an error in a program where the consequences of an accident could be severe even though the probability of occurrence is low. Using both approaches allows a check on the thoroughness of each. Thus, the undesirable end events recognized from tracing the consequences of component failures can be used to see if the essential undesired events used to start the deductive logic process are complete, and vice versa. These checks can also be used for secondary failures; i.e., failures of components that cause other failures within the system. Unless inductive and deductive approaches are used simultaneously at each phase of design and development, the cross checks for thoroughness are sacrificed. Such a sacrifice is not acceptable considering the sensitivity to safety of the chemical weapons disposal program.

H
Summary of System Costs by Category

SYSTEM	TOTAL OF EIGHT SINGLE SITES					ALL MUNITIONS COLLOCATED AT ONE SITE*					
	Facility	Capital	Production	Non-Prod.	TOTAL	Facility	Capital	Production	Non-Prod.	TOTAL	Reference
Baseline	$50.3	$246.9	$611.5	$101.7	$1010.4	$20.4	$ 80.4	$340.4	$48.2	$497.4	Shatto, 1984b
Acidroaster	45.9	140.4	414.0	88.3	689.4	21.1	69.4	330.9	43.0	472.3	Shatto, 1984b
Thermal tower	55.4	341.4	274.0	41.3	712.1	20.7	100.5	164.9	18.1	312.2	Shatto, 1984b
Rotary Kiln w/cryofract.	40.9	174.6	268.5	66.2	550.2	16.4	78.0	147.9	30.7	273.0	Shatto, 1984b
Rotary Kiln/Molten Salt Hybrid. w/cryofract.	42.8	191.5	281.0	72.1	580.2	17.8	87.8	185.2	35.0	325.8	Shatto, 1984b
Heated Chamber Rotary Kiln	60.1	300.6	297.9	56.5	793.1	34.3	222.7	204.7	29.4	491.1	Shatto, 1984b
Electric Rotary (1) Pyrolyzer & Kiln	55.0	232.0	336.9	87.1	711.8	20.6	99.2	212.0	39.3	371.1	Shatto, 1984b
Above w/cryofracture	42.9	222.6	267.5	70.1	603.1	17.6	94.5	156.6	31.7	300.4	Shatto, 1984b
Fluidized Bed w/cryofracture	42.9	100.0	287.0	70.1	500.0	17.1	77.5	166.7	33.0	294.3	Shatto, 1984b
Pusher Hearth (2)	56.0	208.7	384.0	91.1	739.0	21.4	85.3	312.6	43.3	462.6	Shatto, 1984b
Above w/cryofracture	53.5	193.6	275.7	73.7	596.5	19.4	77.5	179.3	35.4	311.6	Shatto, 1984b
Molten Metal	55.6	179.5	351.7	90.3	677.1	21.5	81.7	220.6	48.7	372.5	Shatto, 1984b
Pyrolsis/ Molten salt (3)	49.4	174.6	337.0	84.2	645.2	20.8	90.0	223.4	30.3	372.5	Shatto, 1984b
Above w/cryofracture	46.0	160.0	269.4	67.6	544.6	18.8	82.0	167.4	30.9	299.9	Shatto, 1984b
In-shell Combustion	3.7	100.2	175.7	125.1	492.7	---	---	---	---	---	Shatto, 1984b
Pyrolsis/chlorinolysis	53.7	158.0	619.2	72.5	904.2	---	---	---	---	---	Shatto, 1984b
Above w/credit for DF	53.7	158.0	176.0	72.5	461.0	---	---	---	---	---	Shatto, 1984b
Steam Pyrolsis	NA	29.0	140.0	NA	170.0+	---	---	---	---	---	Houseman, 1984
Drain-in-furnace	NA	24.0	125.0	NA	160.0+	---	---	---	---	---	Houseman, 1984
Underground Hydrol. Combustion		200.0	280.0	NA	480.0	---	---	---	---	---	Houseman, 1984
or Hydrolysis Comb.		94.0	232.0	NA	330.0	---	---	---	---	---	Houseman, 1984
Ocean Placement	Land transportation: $67.8 to 1384.0; ocean transport.: $8.6; envir. compliance: $8.6										USATHAMA, 1983c
Nuclear Explosion	Cost of disposal only: $200.0; Transportation costs not included										Duff, 1982

(1) Called Rotary Pyrolyzer - 1
(2) Called Pusher - 1 in Shatto, 1984b
(3) Called Pyrolyzer/MS - 1

*No transportation costs included. Estimates range from $200 to $900 million (Doronian Briefing, Shatto Telecon, October 18, 1983)

References

Ambrose, J. K. 1982. Letter to Martin Goland, Chairman, National Research Council's Board on Army Science and Technology. Subject: Request for study. November 10. Washington, D.C.: Under Secretary of the Army.

Army Materiel Command Regulation 385-28. 15 October 1969. Safety Regulations for Agent BZ. Washington, D.C.: Headquarters, Army Materiel Command. (181)

Army Regulation 385-16. 1 December 1980. System Safety Engineering and Management. Washington, D.C.: Headquarters, Department of the Army. (78)

Balachandran, M. and R. G. Rouz. 1982. BZ Disposal Facility Development and Design, Task I - Optimum BZ Disposal Facility Selection. Report No. DRXTH-IS-CR-82153. Aberdeen Proving Ground, Md.: U.S. Army Toxic and Hazardous Materials Agency. (67)

Ballantyne, W. C., A. E. Weller, G. G. Zeidman and E. J. Mezey. 1981. Engineering and Technical Support of Agent BZ Disposal Processes -- Task IX -- Incineration/Detonation Studies. Report No. DRXTH-IS-CR-81114. Aberdeen Proving Ground, Md.: U.S. Army Toxic and Hazardous Materials Agency.

Baronian, C. 1984. Personal discussion with Charles Baronian, USATHAMA, on August 23. A detailed report on VX incineration tests is in preparation by CAMDS staff.

Barrett, W. J. 1977. Requirements and Techniques for Monitoring Process for Demil of Chemical Agent Identification Sets. Report No. SORI-3828-1, SORI-EAS-77157. Southern Research Institute.

Note: Numbers in parentheses refer to document file number established by the Board on Army Science and Technology.

Battelle. 1982. Final Report for Phase I of Research and Development Services Process Development/Laboratory Studies in Support of the Munitions/Agents Process Development. Three volumes. Columbus, Ohio: Battelle Columbus Laboratories. (51)

Bereblum, I. 1935. J. Pathol. Bacteriol. 40:549-558.

Botner, H. K. and C. G. Wagner. March 5, 1984. Resolution 84-3. Madison County (Kentucky) Fiscal Court.

Brankowitz, W. 1983. Memorandum for Chief, JACADS Branch. Subject: Draining of HD vs. GB rounds (105 mm) at Anniston Army Depot (DATS). Aberdeen Proving Ground, Md.: U.S. Army Toxic and Hazardous Materials Agency. (149)

Brooks, M. E. and G. A. Parker. 1979. Incineration/Pyrolysis of Several Agents and Related Chemical Materials Contained in Identification Sets. ARCSL-TR-79040. Aberdeen Proving Ground, Md.: U.S. Army Armament Research and Development Command, Chemical Systems Laboratory. (105)

Brown, D. B. 1976. Systems Analysis and Design for Safety. Englewood Cliffs, N.J.: Prentice-Hall.

Carney, C. 1982. Overview of Chemical Demil Project. Briefing for NRC's Board on Army Science and Technology by Carl Carney, GA Technologies, June 20, 1983. San Diego, Calif. (53)

Carney, C. 1984. Briefing on transportation of chemical agents by Carl Carney, GA Technologies, January 12. San Diego, Calif.

Case, R. A. M. and A. J. Lea. 1955. Brit. J. Prev. Soc. Med. 9:62-72.

DARCOM. 1982. Safety Regulations for Chemical Agents GB and VX. DARCOM-R 385-102. Alexandria, Va.: U.S. Army Materiel Development and Readiness Command. (82)

DARCOM Pamphlet 385-23. 1977. System Safety. Alexandria, Va.: Army Materiel Development and Readiness Command. (80)

DARCOM Regulation 385-3. 1981. Hazard Analysis for Facilities, Equipment, and Process Developments. Alexandria, Va.: U.S. Army Materiel Development and Readiness Command. (79)

Davison, W. 1984. Chemical Agent/Munitions Disposal, Mechanical Process Research and Development. Briefing by William Davison, GA Technologies, January 11. San Diego, Calif. (123)

Defense Technical Information Center. 1977. Technical Report 7710. Problem Definition Studies on Potential Environmental Pollutants, VIII, Chemistry and Toxicology of BZ (3-quinoclidinyl benzilate) August.

Department of Defense Explosives Safety Board. 1980. Methodology for Chemical Hazard Prediction Technical Paper No. 10, Change 3. June.

Dickerson, M. H., P. H. Gudiksen, and T. J. Sullivan. 1983. The Atmospheric Release Advisory Capability. UCRL-52802-83. Livermore, Calif.: Lawrence Livermore National Laboratory.

Duff, R. E. 1982. The Feasibility of Chemical Munition Disposal Using Nuclear Explosions. Report No. SSS-R-83-5780. Contract No. DNA 001-81-C-0288. Washington, D.C.: Defense Nuclear Agency.

Dustin, D. F., M. P. Garey, S. Sudar, and S. J. Yosium. 1983. Evaluation of Alternative Thermal Processes for the Disposal of Obsolete Chemical Munitions. Report No. DRXTH-TE-CR-83213. Aberdeen Proving Ground, Md.: U.S. Army Toxic and Hazardous Materials Agency. (61)

Edgewood Arsenal. 1971. Special Publication 100-98. Toxicological Basis for Controlling Emission of GB into the Environment. March.

Edgewood Arsenal. Special Publication 1100-1. Toxicological Basis for Controlling Emission of VX into the Environment.

Edgewood Arsenal. 1975. Special Publication 740-30. Toxicological Basis for Controlling Levels of Mustard in the Environment. June.

Ferer, K. M. 1975. Fifth Post-Dump Survey of the CHASE X Disposal Site. NRL Memorandum Report 2996. Washington, D.C.: Naval Research Laboratory.

General Atomic. 1982. Research and Development Services for Mechanical Process Development/Laboratory Studies in Support of the Munition/Agent Process Development Program. Phase I Final Report. No. GA-A16891, GACP 23-216. Volume I, Technical Report, Books 1-4. San Diego, Calif.: General Atomic Company. (52)

Gordon, J. J., R. H. Inns, M. K. Johnson, L. Leadbeater, M. P. Maidment, D. G. Upshall, G. H. Cooper, and R. L. Rickard. 1983. Arch. Toxicol. 52:71-82.

Griffin, M. 1981. Government Shipment of Carbonyl Chloride (Phosgene). DARCOM Form 2514-12 and attached correspondence. October 28.

Hammer, W. 1976. Occupational Safety Management and Engineering. Englewood Cliffs, N.J.: Prentice-Hall.

Hammer, W. 1980. Product Safety Management and Engineering. Englewood Cliffs, N.J.: Prentice-Hall.

Hasson, S. W. and J. R. Kolmer. 1978. Operation of the Drill and Transfer System at Dugway Proving Ground, Utah: Final Environmental Impact Statement. Aberdeen Proving Ground, Md.: Office of the Project Manager for Chemical Demilitarization and Installation Restoration.

Hatterick, G. R. and M. E. Price. 1980. Format Options and Procurement of Technical Orders. Report No. AFHRL-TR-80-49. Brooks Air Force Base, Tex.: HQ Air Force Human Resources Laboratory (AFSC).

Hercules, Incorporated. 1974a. Failure Mode and Hazardous Effect Analysis of the Agent Destruction System for CAMDS. Cumberland, Md.: Allegany Ballistics Laboratory.

Hercules, Incorporated. 1974b. Failure Mode and Hazardous Effects Analysis of a Deactivated Furnace and Air Pollution Control System. Cumberland, Md.: Allegany Ballistics Laboratory.

Heston, W. E. and M. D. Levillain. 1953. Proc. Soc. Exp. Biol. N.Y. 82:457-460.

Hidalgo, P. 1983. Overview of Chemical Demilitarization Programs. Briefing by Colonel Peter Hidalgo, USATHAMA, October 17. Aberdeen, Md.

Houseman, J. 1984. Novel Techniques for Disposal of Chemical Munitions. Briefing by John Houseman, Jet Propulsion Laboratory, January 11. San Diego, Calif. (118)

IARC Monograph. 1975. Vol. 9, pp. 181-192.

Irving, Solomon et al. 1970. Methods of Estimating Hazard Distances for Accidents Involving Chemical Agents. Operations Research Group Report No. 40. Edgewood Arsenal, Md.: Operations Research Group. February.

JACADS. Undated. Excerpt labeled "Section 3 Process Descriptions" from unidentified document--probably, Final Concept Design for JACADS.

J. M. Huber Corporation. Undated. Huber Technology Fluid - Wall (HTFW) Reactor. Technical Bulletin. Borger, Tex.: J. M. Huber Corporation. (129)

Jody, B. J., G. Chettur, R. J. Dihu, M. Schurger, and R. H. Snow. 1983. Development of Chemical Processes for Chemical Demilitarization--Phase I. Report DRXTH-TE-CR-83209. Aberdeen Proving Ground, Md.: U.S. Army Toxic and Hazardous Materials Agency.

Johnson, W. G. 1980. MORT Safety Assurance Systems. Chicago: Marcel Dekker and New York and National Safety Council.

Jones, M. L. and L. R. Albaugh. 1974a. Failure Modes and Hazardous Effect Analysis of the Agent Destruction System for CAMDS at Tooele Army Depot, Tooele, Utah. Report No. A08202-520-03-004. Cumberland, Md.: Hercules, Inc. (143)

Jones, M. L. and L. R. Albuagh. 1974b. Final Report, Human Factors Analysis of the Agent Destruction System for CAMDS at Tooele Army Depot, Tooele, Utah. Report No. 74-70. Cumberland, Md.: Hercules Inc. (37)

Katz, M. J. 1974. Failure Modes and Hazardous Effects Analysis of a Deactivation Furnace and Air Pollution Control System. Report No. A08208-520-03-009. Cumberland, Md.: Hercules, Inc.

Larsson, L. 1957. Acta Chem. Scand. 11:1131-1142.

Lawhorne, S. E. 1974. Statistically Significant Sampling Program - Test Summary. Inclosure No. 2 for Demilitarization Plan: Operation of the Chemical Agent Munitions Disposal System (CAMDS) at Tooele Army Depot, Utah. Aberdeen Proving Ground, Md.: U.S. Army Toxic and Hazardous Materials Agency.

Lee, K. W. and D. S. Lewis. 1983. J. M. Huber PCB Destruction Process Trial Burn Report. Borger, Tex.: J. M. Huber Corporation. (128)

Leideritz, J. Undated. Memorandum from Lieutenant Colonel James Leideritz, U.S. Army, to Howard E. Clark, Board on Army Science and Technology, transmitting information excerpted from classified letter, DRSMC-CLN-TE(A), Chemical Research and Development Center, AMCCOM, 4 April 1984. Subject: Army Requirements for Difluoro.

Little, Arthur D., Inc. 1982. Incineration Versus Neutralization for Johnston Atoll Chemical Agent Disposal System. Report No. 4505-TR-11. Contract No. DACA 87-81-C-0122. Huntsville, Ala.: U.S. Army Engineers Division. (153)

Lloyd, J. D. 1984. Memo from Director, U.S. Army DARCOM Field Safety Activity, Charlestown, Indiana, to LTC Leiderits, "Maximum Credible Events (MCE's) and 1% Lethality Distances for DARCOM Chemical Agent Storage Sites," March 2.

Lurk, P. 1981. Training Program for CAMDS Hazardous and Toxic Waste Treatment and Storage Operations. Site Plan 57-04. Tooele, Utah: CAMDS Directorate.

Malasky, S. W. 1982. System Safety: Technology and Application. New York: Garland STPM Press.

Mann and Pope. 1922. J. Chem. Soc. 121:594.

Marchant, E. J., R. G. Wright, M. C. Forrest, D. L. Henning. 1984. Safety analysis of computerized systems. Hazard Prevention. March/April 1984.

Meagher, J., S. Derby, and J. Graham. 1983. Robot safety/collision avoidance. Professional Safety. December 1983.

Mezey, E. J., T. Roy and G. A. Jungclaus. 1980. Engineering and Technical Support of Agent BZ Disposal Processes — Task III — Incineration Confirmation. Report No. DRXTH-IS-CR-80075. Aberdeen Proving Ground, Md.: U.S. Army Toxic and Hazardous Materials Agency.

Mikulak, R. 1984. Briefing on Arms Control and Disarmament Activities by Robert Mikulak, U.S. Department of State, February 9. Washington, D.C.

MIL-H-46855B. 1982. Military Specification: Human Engineering Requirements for Military Systems, Equipment and Facilities. Report No. 1982-505-022/2111, 2-1. Washington, D.C.: U.S. Government Printing Office.

MIL-STD-1472C. 1981. Military Standard: Human Engineering Design Criteria for Military Systems, Equipment and Facilities. Washington, D.C.: U.S. Government Printing Office.

MIL-STD-882B. 1983. Military Standard: System Safety Program Requirements, Washington, D.C.: U.S. Government Printing Office

Military Chemistry and Chemical Compounds. 1975. Army/Air Force Field Manual. FM 309/AFM 355-7.

Mink, W. H., H. E. Carlton, D. W. Folsom, D. R. Hopper, J. J. McNeely, and A. E. Weller. 1983. Thermal Process Development, Phase I Final Technical Report for the Period 5 May 1982 to 31 March 1983. Report No. DRXTH-TE-CR-83212. Aberdeen Proving Ground, Md.: U.S. Army Toxic and Hazardous Materials Agency. (47)

MITRE Corporation. 1983a. Chemical Demilitarization Concepts -- Technical Evaluation. Aberdeen Proving Ground, Md.: U.S. Army Toxic and Hazardous Materials Agency. (72)

MITRE Corporation. 1983b. Technical Evaluation -- Novel Demilitarization Concepts for Chemical Munitions. Aberdeen Proving Ground, Md.: U.S. Army Toxic and Hazardous Materials Agency. (71)

MITRE Corporation. 1983c. Technical Evaluation -- Mechanical Demilitarization Concepts for Chemical Munitions. Aberdeen Proving Ground, Md.: U.S. Army Toxic and Hazardous Materials Agency. (69)

MITRE Corporation. 1983d. Technical Evaluation -- Thermal Demilitarization Concepts for Chemical Munitions. Aberdeen Proving Ground, Md.: U.S. Army Toxic and Hazardous Materials Agency. (70)

Montel, W. Undated. White paper entitled Expedited Rocket Demilitarization Program. Briefing presented by William Montel, former head of USATHAMA research program, April 5, 1984. Washington, D.C. (145)

Moynihan, P. I., L. E. Compton, J. Housemen, J. J. Kalvinskas, and J. B. Stephens. 1983. Safe Disposal Techniques for DOD Toxic Wastes - Executive Summary and Volumes I, II, III. Summary Report No. JPL D-918 and Reports DRXTH-TE-CR-83229, 30, 31. Aberdeen Proving Groud, Md.: U.S. Army Toxic and Hazardous Materials Agency. (55, 120-122)

National Academy of Sciences. 1969. Disposal Hazards of Certain Chemical Warfare Agents and Munitions. Washington, D.C.: Ad Hoc Advisory Committee of the National Academy of Sciences. June 24.

National Research Council. 1984. Assessment of Chemical and Biological Sensor Technologies. Washington, D.C.: National Research Council, Board on Army Science and Technology.

NUREG-0700. 1981. Guidelines for Control Room Design Reviews. Washington, D.C.: U.S. Nuclear Regulatory Commission.

O'Leary, J. F., A. M. Kunkel, and A. E. Jones. 1961. J. Pharmocol. Exp. Therap. 132:50-57.

Parsons, Ralph M., Company. 1983a. Final Concept Design. Volume I. Design Analysis: Johnston Atoll Chemical Agent Disposal System. Huntsville, Ala.: U.S. Army Engineers Division. (95)

Parsons, Ralph M., Company. 1983b. Artists Rendering of Munitions Demilitarization Machine for JACADS. Johnston Atoll Chemical Agent Disposal System. Huntsville, Ala.: U.S. Army Engineers Division. (148)

Parsons, Ralph M., Company. 1983c. Preliminary Hazards Analysis of Final Concept Design: Johnston Atoll Chemical Agent Disposal System. Task G-5C Interim Report. Ralph M. Parsons Co., Delaware. (102-2)

Parsons, Ralph M., Company. 1983d. Safety Design Reviews. Task G-5B Preliminary Report. Ralph M. Parsons Co., Delaware. (102-1)

Parsons, Ralph M., Company. 1983e. Preliminary Hazards Analysis of Final Concept Design: Johnston Atoll Chemical Agent Disposal System. Task G-5C Interim Report. Ralph M. Parsons Co., Delaware. (102-3)

Parsons, Ralph M., Company. 1983f. Human Factors Engineering Criteria for Johnston Atoll Chemical Agent Disposal System. Huntsville, Ala.: U.S. Army Engineers Division. (38)

Parsons, Ralph M., Company. Undated. Detailed design drawings for JACADS facility. Huntsville, Ala.: U.S. Army Engineer Division. (110)

Paulick, J. S. 1983a. Briefing on CAMDS presented at the Chemical Disarmament Verification Workshop. November 15-16 1983. Tooele Army Depot, Utah. Aberdeen Proving Ground, Md.: U.S. Army Toxic and Hazardous Materials Agency. (134)

Paulick, J. S. 1983b. Briefing on CAMDS Operations by Joseph S. Paulick, Director for CAMDS, December 8. Tooele Army Depot, Utah.

Potter, R. 1983. Safety for robotics. Professional Safety. December 1983.

Pugh, D. L., et al. 1970. Incineration of GB and Containment of Gaseous Products. Report No. EATR 4463. Aberdeen Proving Ground, Md.: U.S. Army Armament Research and Development Command, Chemical Systems Laboratory.

Rankin, J. E. 1978. Safety Manual No. 15. System Safety Engineering National Mine Health and Safety Academy. Washington, D.C.: U.S. Government Printing Office.

Reeves, A. M. and G. C. Kortz. 1954. Thermal Decomposition of GB. Report No. CRLR 393. Aberdeen Proving Ground, Md.: U.S. Army Armament Research and Development Command, Chemical Systems Laboratory.

RFP# DAAD11-84-R-007. 1983. Request for Proposals: Advanced Chemical Demil System Development. Aberdeen Proving Ground, Md.: Chemical/ Ballistics Procurement Division.

Roux, R. G. 1984. Expedited M55 Rocket Disposal. Briefing by Richard G. Roux, USATHAMA, April 6. Washington, D.C.

Schultz, T. H., V. R. Daiga, J. K. Shah, T. J. Kuhn, and C. A. Bersch. 1983. Thermal Process Development, Phase I Final Report, Concept Development. Report No. DRXTH-TE-CR-83214. Aberdeen Proving Ground, Md.: U.S. Army Toxic and Hazardous Materials Agency. (54)

Scott, J. A. 1984a. Personal discussion with John A. Scott, USATHAMA, July 9.

Scott, J. A. 1984b. Briefing on Long-range Demilitarization Program-Baseline Costs by John A. Scott, USATHAMA, March 2. Washington, D.C.

Seat, P. D. 1984. Acceptance Testing of the Rocket Shear Machine Breadboard. Test Report No. C31-206.08.003-1. Tooele Army Depot, Utah.: Directorate for Ammunition Equipment. (147)

Shappert, L. B., Carnes, S. A., et al. 1983. Collocation Alternatives for Demilitarization of the Lethal Chemical Stockpiles. Oak Ridge National Laboratory Chemical Technology Division. ORNL/CP-83-278. (Final Draft). Oak Ridge, Tenn.: Oak Ridge National Laboratory. (141)

Shatto, A. 1983a. Briefing on R&D Program in Support of Chemical Demilitarization Program by Allen Shatto, USATHAMA, October 18. Aberdeen, Md.

Shatto, A. 1983b. Expedited M55 Rocket Project. Briefing by Allen Shatto, USATHAMA, October 18. Aberdeen, Md.

Shatto, A. 1984a. Personal communication.

Shatto, A. 1984b. Systems Analysis of Competing Technologies. Briefing by Allen Shatto, USATHAMA, February 9. Washington, D.C. (132)

Staniev, C. J. Undated(a). Final Report of the Shipment of Phosgene for Disposal by Resale, Part I (From Palacios, Texas, to Lockport, New York). Aberdeen Proving Ground, Md.: U.S. Army Toxic and Hazardous Materials Agency.

Staniev, C. J. Undated(b). Final Report of the Shipment of Phosgene for Disposal by Resale, Part II (From Rocky Mountain Arsenal, Colorado, to Lockport, New York). Aberdeen Proving Ground, Md.: U.S. Army Toxic and Hazardous Materials Agency.

Stowe, W. W. 1983. Robots - safe or hazardous? Professional Safety. December 1983.

Surkein, R. J. 1970. USAMC OPLAN CHASE. Revised as of 23 Jul 70. AMSMU DS-TM Distribution cover with document attached. Dover, N.J.: Dept. of the Army Headquarters, U.S. Army Munitions Command.

System Safety Development Center. 1976. MORT User's Manual. Idaho Falls, Idaho: USERDA/EG&G.

System Safety Development Center. 1977a. Standardization Guide for Construction and Use of MORT-Type Analytic Trees. Idaho Falls, Idaho: USERDA/EG&G.

System Safety Development Center. 1977b. Safety Information System Guide. Idaho Falls, Idaho. USERDA/EG&G.

Tarrants, W. E. 1980. The Measurement of Safety Performance. New York: Garland STPM Press.

The Merck Index, 9th Edition, p. 819. 1976. Rahway, N.J.: Merck Co.

TRW. 1975. Safety Analyses and Hazard Evaluation Report Failure Modes and Effects Analysis for CAMDS. Redondo Beach, Calif.: TRW Environmental Services. (104)

U.S. Army. 1983a. United States Detailed Views on the Contents of a Chemical Weapons Ban. Committee on Disarmament Document No. CD/343. February 10. GE.83-60308. Washington, D.C.: U. S. Department of State.

U.S. Army. 1983b. Illustrative On-Site Inspection Procedures for Verification of Chemical Weapons Stockpile Destruction. Committee on Disarmament Document No. CD/387. July 6. GE.83-62194. Washington, D.C.: U.S. Department of State.

U.S. Army. 1983c. Workshop on Verification of Chemical Weapons Stockpile
Destruction. Committee on Disarmament Document No. Cd/419. August 23. GE.83-63904. Washington, D.C.: U.S. Department of State.

U.S. Army. 1984. Draft Convention on the Prohibition of Chemical Weapons. Committee on Disarmament Document No. CD/500. April 18. GE.84-61689. Washington, D.C.: U.S. Department of State. (153)

U.S. Army. 1977. Operation of the Chemical Agent Munitions Disposal System (CAMDS) at Tooele Army Depot, Utah - Final Environmental Impact Statement. Enclosure No. 2 - Agent Detoxification. Aberdeen Proving Ground, Md.: Office of the Project Manager for Chemical Demilitarization and Installation Restoration. (13)

U.S. Army. 1981a. Tooele Army Depot RMT After Action Report. Volumes 1, 2, 3, and 4. Tooele, Utah: Tooele Army Depot

U.S. Army. 1981b. March. Transportation of Chemical Material Oplan RMT, Basic Plan with Change 2. Alexandria, Va.: U.S. Army Material Development and Readiness Command.

U.S. Army. 1981c. October 1981. After Action Report. Transportation of Chemical Material. Operation RMI (August 1981). Volumes I, II, and III. Alexandria, Va.: U.S. Army Materiel Development and Readiness Command.

U.S. Army Material Development and Readinesss Command. 1980. Handbook for Chemical Hazard Prediction DARCOM Handbook No. 385-2.1-80, pp. 8-6 to 8-8. February.

U.S. Army Munitions Command. 1969. OPERATION CHASE. Plan for Disposal of Chemical Munitions Dover. N.J.

U.S. Navy. 1975. Interservice Procedures for Instructional Systems Development. NAVEDTRA-106A.

USATHAMA. 1979. Operation of the Chemical Agent Munitions Disposal System (CAMDS) at Tooele Army Depot, Utah. Enclosure No. 20: Demilitarization Protective Ensemble (DPE) Development and Evaluation Report. Aberdeen Proving Ground, Md.: U.S. Army Toxic and Hazardous Materials Agency.

USATHAMA. 1982a. Long Range Chemical Demilitarization Concept Study - Revised. Aberdeen Proving Ground, Md.: U.S. Army Toxic and Hazardous Materials Agency. (46)

USATHAMA. 1983a. Final Demilitarization Plan for Operation of the Chemical Agent Munitions System (CAMDS) at Tooele Army Depot, Utah. Aberdeen Proving Ground, Md.: U.S. Army Toxic and Hazardous Materials Agency. (45)

USATHAMA. 1983b. Memorandum for Department of Health and Human Services. Subject: Historical Summary of CAMDS GB Agent Tests. DRXTH-SE-C. June 24. Aberdeen Proving Ground, Md.: U.S. Army Toxic and Hazardous Materials Agency. (22)

USATHAMA. 1983c. Regulatory Impacts on the Cost of Chemical Demilitarization. Aberdeen Proving Ground, Md.: U.S. Army Toxic and Hazardous Materials Agency. (42)

Van Horn, K. R., ed. 1967. Pp. 300 - 303 in Aluminum, Vol. 2, Design and Application. Metals Park, Ohio: American Society for Metals.

Vesely, W. E., F. F. Goldbert, N. H. Roberts, and D. F. Jaasl. 1981. Fault Tree Handbook. NUREG 0492, Systems and Reliability Research. Washington, D.C.: Nuclear Regulatory Commission.

Whelan, R. 1983a. Briefing on chemical waste disposal activities in other nations by Robert Whelan, USATHAMA, December 7. Salt Lake City, Utah.

Whelan, R. 1983b. Briefing on Johnston Atoll Chemical Agent Disposal System by Robert Whelan, USATHAMA, October 17. Aberdeen, Md.

Whelan, R. 1984a and 1984b. Personal communication with Robert Whelan, USATHAMA, August 25.

Whitacre, C. G. 1981. Computer Programs for Change 3. DODESS TP 10 (addendum to ARCSL-TR-80048). Chemical Systems Laboratory Technical Report ARCSL-TR-81016. Aberdeen Proving Ground, Md. March.

Whitacre, C. G., and L. Kneas. 1980. Revised Field Handbook for Computing Chemical Hazard Distances. Chemical Systems Laboratory Technical Report ARCSL-TR-80048. Aberdeen Proving Ground, Md. October.

Whitacre, C. G., and M. M. Myirski. 1983. (Rev. January 1983). Computer Program for Report ARCSL-TR-82014. Aberdeen Proving Ground, Md. September.

Wilson, J. G. and F. C. Fraser, eds. 1977. Handbook of Teratology, Vol. I, pp. 357-385. New York: Plenum.

Wynne, D. J. 1973. Pilot Scale Incineration of GB and VX and Containment of Gaseous Products. Report No. EATR 4734. Aberdeen Proving Ground, Md.: U.S. Army Armament Research and Development Command, Chemical Systems Laboratory.

Yurow, Harvey W. 1981. Decontamination Methods for HD, GB, and VX, A Literature Survey. ARCSL-SP-80032. Aberdeen Proving Ground, Md.: U.S. Army Armament Research and Development Command, Chemical Systems Laboratory. (131)

Yurow, H. W. and G. T. Davis. 1982. Decontamination and Disposal Methods for Chemical Agents - A Literature Survey. Report No. ARCSL-TR-81080. Aberdeen Proving Ground, Md.: U.S. Army Armament Research and Development Command. (94)

Glossary of Acronyms

AAP	Army Ammunition Plant
AD	Army Depot
AEC	Atomic Energy Commission
AMCCOM	U.S. Army Armament, Munitions and Chemical Command
ANAD	Anniston Army Depot
APG	Aberdeen Proving Ground
APIMS	Atomospheric Pressure Ionization Radio Frequency Mass Spectrometer
AR	Army Regulation
ARAC	Atomospheric Release Advisory Capability
BZ	3-Quinuclidinyl Benzilate (a hallucinogenic agent)
CAI	Chemical Accident/Incident
CAIC	Chemical Accident/Incident Control
CAMDS	Chemical Agent Munitions Disposal System
CAMPACT	Chemical Ammunition Package Transporter
CAMS	Central Atmopheric Monitoring System
CEQ	Council on Environmental Quality
CERCLA	Comprehensive Environmental Response, Compensation, and Liability Act (Superfund)
CK	Cyanogen Chloride (a blood agent)
CONUS	Continental United States

CX	Phosgene Oxime (a blister agent)
DA	Depot Activity
DARCOM	United States Army Materiel Development and Readiness Command, now U.S. Army Materiel Command (AMC)
DARCOM-R	DARCOM Regulation
DATS	Drill and Transfer System
DDESB	Department of Defense Explosives Safety Board
DESCOM	Depot Systems Command
DF	Methyl Phosphonic Difluoride
DOD	Department of Defense
DOE	Department of Energy
DOT	Department of Transportation
EIS	Environmental Impact Statement
EPA	Environmental Protection Agency
ERDA	Energy Research and Development Administration
GAO	General Accounting Office
GB	Sarin, $C_4H_{10}FO_2P$ (a nerve agent)
H	Mustard (a blister agent)
HD	Distilled Mustard, $Cl(CH_2CH_2)_2S$ (a blister agent)
HF	Human Factors Engineering
HMTA	Hazardous Materials Transportation Act
HT	Mustard-T Mixture (a blister agent)
ID	Identification

JACADS	Johnston Atoll Chemical Agent Disposal System
LBDA	Lexington-Blue Grass Depot Activity
LC_{t50}	Median Lethal Dosage
LD_{50}	Median Lethal Dose
MCA	Military Construction, Army (a category of appropriated funds)
MCE	Maximum Credible Event
MIL-H	MIL-CODE-H, Unserviceable, Unrepairable or Obsolete
MIL-STD	Military Standard
MORT	Management Oversight and Risk Tree
NAAP	Newport Army Ammunition Plant
NEPA	National Environmental Policy Act
NESHAP	National Emmission Standard for Hazardous Air Pollutants
NSPS	New Source Performance Standards
NUREG	Nuclear Regulation
ORNL	Oak Ridge National Laboratory
PBA	Pine Bluff Arsenal
PG	Proving Ground
PL	Public Law
PUDA	Pueblo Depot Activity
RCRA	Resource Conservation and Recovery Act
RDT&E	Research, Development, Test, and Evaluation (a category of appropriated funds)
RFP	Request for Proposal

SAC	Strategic Air Command
SB	Supply Bulletin
SDA	Skill Performance Aid
STPML	Stockpile Test Program, Metallurgical
SUPLECAM	Surveillance Program, Lethal Chemical Agents and Munitions
TC	Ton Container
TCM	Toxic Chemical Munition
TEAD	Tooele Army Depot
TECOM	U.S. Army Test and Evaluation Command
TLV	Threshold Limit Value - the maximum exposure that is permitted
TM	Technical Manual
TNT	Trinitrotoluene (a high explosive)
TWA	Time Weighted Average
UMDA	Umatilla Depot Activity
USATHAMA	U.S. Army Toxic and Hazardous Materials Agency
VX	$C_{11}H_{26}NO_2PS$ (a nerve agent)
WESCOM	U.S. Army Western Command

Glossary of Terms

Binary Weapon	A new type of chemical weapon, in which two non-toxic chemicals are used to create a toxic chemical agent in the projectile after the projectile is fired at a target.
Code A	Serviceable.
Code G	Missing a component.
Code H	Unserviceable, unrepairable or obsolete.
Collet	A metal collar used in disassembly of chemical munitions.
Difluoro	Methyl phosphonic difluoride, one of two chemicals to be used in binary weapons.
Dunnage	Materials, usually timber, used in warehousing, on which supplies are stacked.
5X	5X decontamination state, material rendered safe for salvage and sale.
Igloo	A reinforced concrete, earth covered shelter used for the storage of explosives and munitions.
Leaker	A chemical munition, from which a chemical agent has leaked as a result of deterioration or mishandling.
Maximum Credible Event	A worst-case (credible) accidental release of a chemical agent.
M23	A land mine that contains a chemical agent.

M55	An aerial rocket weapon that contains a chemical agent.
MC1 MK94	An aerial bomb that contains a chemical agent.
Thermite	A chemical substance that produces sufficient heat to burn through heavy-walled steel munitions.
3X	3X decontamination state, metal components that have been chemically decontaminated, such that no agent can be detected on the metal surface.
Uploaded	This pertains to chemical munitions that have had explosive burster charges installed to improve military readiness.
Wet-Eye	A type of U.S. Navy bomb containing a chemical agent.

B065

Evaluation of the Johnston Atoll Chemical Agent Disposal System Operational Verification Testing

Part II

NATIONAL RESEARCH COUNCIL

EVALUATION OF THE JOHNSTON ATOLL CHEMICAL AGENT DISPOSAL SYSTEM OPERATIONAL VERIFICATION TESTING: PART II

Committee on Review and Evaluation of the Army
Chemical Stockpile Disposal Program
Board on Army Science and Technology
Commission on Engineering and Technical Systems
National Research Council

NATIONAL ACADEMY PRESS
Washington, D.C. 1994

NOTICE: The project that is the subject of this report was approved by the Governing Board of the National Research Council, whose members are drawn from the councils of the National Academy of Sciences, the National Academy of Engineering, and the Institute of Medicine. The members of the committee responsible for the report were chosen for their special competencies and with regard for appropriate balance.

This report has been reviewed by a group other than the authors according to procedures approved by a Report Review Committee consisting of members of the National Academy of Sciences, the National Academy of Engineering, and the Institute of Medicine.

The National Academy of Sciences, is a private, nonprofit, self-perpetuating society of distinguished scholars engaged in scientific and engineering research, dedicated to the furtherance of science and technology and to their use for the general welfare. Upon the authority of the charter granted to it by the Congress in 1863, the Academy has a mandate that requires it to advise the federal government on scientific and technical matters. Dr. Bruce M. Alberts is president of the National Academy of Sciences.

The National Academy of Engineering was established in 1964, under the charter of the National Academy of Sciences, as a parallel organization of outstanding engineers. It is autonomous in its administration and in the selection of its members, sharing with the National Academy of Sciences the responsibility for advising the federal government. The National Academy of Engineering also sponsors engineering programs aimed at meeting national needs, encourages education and research, and recognizes the superior achievements of engineers. Dr. Robert M. White is president of the National Academy of Engineering.

The Institute of Medicine was established in 1970 by the National Academy of Sciences to secure the services of eminent members of appropriate professions in the examination of policy matters pertaining to the health of the public. The Institute acts under the responsibility given to the National Academy of Sciences by its congressional charter to be an adviser to the federal government and, upon its own initiative, to identify issues of medical care, research, and education. Dr. Kenneth I. Shine is president of the Institute of Medicine.

The National Research Council was organized by the National Academy of Sciences in 1916 to associate the broad community of science and technology with the Academy's purposes of furthering knowledge and advising the federal government. Functioning in accordance with general policies determined by the Academy, the Council has become the principal operating agency of both the National Academy of Sciences and the National Academy of Engineering in providing services to the government, the public, and the scientific and engineering communities. The council is administered jointly by both Academies and the Institute of Medicine. Dr. Bruce M. Alberts and Dr. Robert White are chairman and vice chairman, respectively, of the National Research Council.

This is a report of work supported by Contract DAAL03-90-C-0035 (CLIN OO1) between the U.S. Department of the Army and the National Academy of Sciences.

Copies available from:
Board on Army Science and Technology
National Research Council
2101 Constitution Avenue, N.W., HA 258
Washington, D.C. 20418
(202) 334-1902

Copyright 1994 by the National Academy of Sciences. All rights reserved.
Printed in the United States of America.

Committee on Review and Evaluation of the Army Chemical Stockpile Disposal Program

CARL R. PETERSON, *Chairman*, Massachusetts Institute of Technology, Cambridge
RICHARD M. DOWD, R.M. Dowd and Company, Washington, D.C. (until 6/93)
ELISABETH M. DRAKE, Massachusetts Institute of Technology, Cambridge
COLIN G. DRURY, University at Buffalo, State University of New York
GENE H. DYER, Consultant, San Rafael, California
MG VINCENT E. FALTER, USA Retired, Springfield, Virginia
ANN FISHER, The Pennsylvania State University, University Park (from 3/93)
RICHARD C. FLAGAN, California Institute of Technology, Pasadena (until 6/93)
B. JOHN GARRICK, PLG, Inc., Newport Beach, California
WILLIAM E. KASTENBERG, University of California, Los Angeles (from 8/93)
CHARLES E. KOLB, Aerodyne Research, Inc., Billerica, Massachusetts (from 8/93)
DAVID S. KOSSON, Rutgers—The State University, Piscataway, New Jersey (from 8/93)
JOHN P. LONGWELL, Massachusetts Institute of Technology, Cambridge
RICHARD S. MAGEE, New Jersey Institute of Technology, Newark
WALTER G. MAY, University of Illinois at Urbana-Champaign, Urbana (from 8/93)
ALVIN H. MUSHKATEL, Arizona State University, Tempe
PETER J. NIEMIEC, Greenberg, Glusker, Fields, Claman & Machtinger, Los Angeles, California
AL NOVAK, Consultant, Hendersonville, North Carolina (until 7/93)
GEORGE PARSHALL, E.I. du Pont de Nemours & Company, Wilmington, Delaware
GAVRIEL SALVENDY, Purdue University, West Lafayette, Indiana
JAMES R. WILD, Texas A&M University, College Station (from 8/93)

Staff

DONALD L. SIEBENALER, Study Director
TRACY D. WILSON, Senior Program Officer
MARGO L. FRANCESCO, Senior Program Assistant

Board on Army Science and Technology

PHILIP A. ODEEN, *Chairman*, BDM International, Inc., McLean, Virginia
LAWRENCE J. DELANEY, *Vice Chairman*, Montgomery and Associates, Washington, D.C.
ROBERT A. BEAUDET, University of Southern California, Los Angeles
WILLIAM K. BREHM, Systems Research Applications Corporation, Arlington, Virginia
ALBERTO COLL, U.S. Naval War College, Newport, Rhode Island
WILLIAM H. EVERS, JR., W. J. Schafer Associates, Inc., Arlington, Virginia
JAMES L. FLANAGAN, Center for Computer Aids in Industrial Productivity, Piscataway, New Jersey
CHRISTOPHER C. GREEN, General Motors Research Laboratories, Warren, Michigan
ROBERT J. HEASTON, Guidance and Control Information Analysis Center, Chicago, Illinois
THOMAS MCNAUGHER, The Brookings Institution, Washington, D.C.
GENERAL GLENN K. OTIS, USA Retired, Coleman Research Corporation, Fairfax, Virginia
NORMAN F. PARKER, Varian Associates (Retired), Cardiff by the Sea, California
KATHLEEN J. ROBERTSON, Center for Naval Analysis, Alexandria, Virginia
HARVEY W. SCHADLER, General Electric Company, Schenectady, New York
F. STAN SETTLES, The Garrett Corporation (Retired), Arlington, Virginia
JOYCE L. SHIELDS, Hay Systems, Inc., Arlington, Virginia
DANIEL C. TSUI, Princeton University, Princeton, New Jersey
ALLEN C. WARD, University of Michigan, Ann Arbor

Staff

BRUCE A. BRAUN, Director
ALBERT A. SCIARRETTA, Senior Program Officer
DONALD L. SIEBENALER, Senior Program Officer
TRACY D. WILSON, Senior Program Officer
HELEN D. JOHNSON, Staff Associate
ANN M. STARK, Program Associate
MARGO L. FRANCESCO, Senior Program Assistant
ALLISON P. KNIGHT, Administrative Secretary
LUCY V. FUSCO, Administrative Secretary

Preface

Public Law 99-145, passed by Congress in 1985, directed the Department of Defense (DOD) to dispose of the U.S. stockpile of unitary chemical agents and munitions.[1] As the DOD executive agent for this effort, the Department of the Army developed a Chemical Stockpile Disposal Program, which would employ on-site disposal of the stockpile by incineration at a storage site on Johnston Island in the Pacific Ocean and at eight storage sites in the continental United States.

The Army developed a "baseline" system to serve as the primary means for destroying chemical agents and associated munitions. This system involves the disassembly of certain munitions, with the subsequent separate incineration of agent, explosive components, metal parts, and associated dunnage. The Army designed and constructed the Johnston Atoll Chemical Agent Disposal System (JACADS) as the first full-scale production plant using the baseline system.

Public Law 100-456, passed by Congress in 1988, required the Army to complete Operational Verification Testing (OVT) of JACADS before proceeding to destroy the stockpiles of chemical agents and munitions in the continental United States. Started in July 1990, OVT consisted of four phases to destroy various munitions and the three principal chemical agents represented in the stockpile, and to decontaminate the containers. OVT was completed in March 1993. To proceed with its Chemical Stockpile Disposal Program, the Army was required to certify the "success" of OVT to the Secretary of Defense and subsequently to Congress. The MITRE Corporation was retained by the Army to monitor, evaluate, and report the results of all phases of OVT.

---

[1] The term unitary is used for a chemical loaded in munitions or stored in the form of a lethal material. More recently, binary munitions have been produced in which two relatively safe chemicals are loaded in separate compartments to be mixed to form a lethal agent after the munition is fired or released. Binary munitions are not stockpiled in the United States and thus are not included in the present disposal program.

In 1987, the National Research Council's standing Committee on Review and Evaluation of the Army Chemical Stockpile Disposal Program (Stockpile Committee) was formed to provide the Army with technical advice and counsel on specific aspects of the disposal program. The Stockpile Committee was chartered to monitor OVT at JACADS and to review the results of OVT as reported by MITRE Corporation.

Coincident with OVT activities at JACADS has been the construction of a second stockpile disposal facility, at Tooele Army Depot, Utah. The Army planned that this construction would be completed by July 1993, at which time it would begin systemization of the plant. This systemization consists of testing and operating, with agent surrogates, all furnaces and associated pollution abatement systems, automated munition disassembly machines, heating and ventilation systems, and electrical and plumbing systems to ensure that the facility is capable of safe and effective operation prior to its use for destruction of actual chemical agent.

The Army could not proceed with its 18-month systemization at Tooele until it notified Congress of the successful completion of OVT. The Army requested that the Stockpile Committee use its review of the MITRE reports, its experience from several visits to both the JACADS and Tooele sites, and its long-term study and examination of the baseline system, to provide its assessment of OVT at JACADS. This National Research Council report could then assist Congress in deciding whether to proceed with systemization at Tooele, while providing the Army with notification of any Stockpile Committee concerns.

Barring unforeseen complications with OVT, the Stockpile Committee believed that a two-report approach to its assessment of OVT would enable it to perform its work properly, while simultaneously allowing the Army to continue work on its Chemical Stockpile Disposal Program without prohibitive delays. The committee did a preliminary assessment of OVT and issued its report *Evaluation of the Johnston Atoll Chemical Agent Disposal System, Operational Verification Testing: Part I*, on July 16, 1993. That report recommended the initiation of systemization at Tooele and the use of systemization to implement identified improvements relating to safety, environmental performance, and plant efficiency. The committee recommended that these improvements be made prior to initiating destruction of agent and munitions. The committee's comprehensive follow-up report (this report) includes detailed recommendations for changes and improvements, again stating that they should be implemented before systemization concludes and before agent operations begin.

Considerable committee discussion and deliberation underpin this report. The committee wishes particularly to recognize the efforts of Drs. Richard S. Magee and Elisabeth M. Drake, and extensive assistance from Dr. John P. Longwell and MG Vincent E. Falter, USA Retired, in producing draft

material for committee consideration. They were very ably supported by Mr. Donald L. Siebenaler, Mr. Tracy D. Wilson, and Ms. Margo L. Francesco from the National Research Council staff. Drs. William E. Kastenberg, Charles E. Kolb, David S. Kosson, Walter G. May, and James R. Wild were appointed to the committee in August 1993. They did not participate in the study discussions and deliberations that led to this report.

The committee would also like to thank the Office of the Program Manager for Chemical Demilitarization for its assistance in making the chemical disposal facilities available for inspection and evaluation and for providing briefings and other information necessary to understand OVT.

Carl R. Peterson, *Chairman*
Committee on Review and Evaluation of the
Army Chemical Stockpile Disposal Program

Contents

EXECUTIVE SUMMARY 1
The Chemical Stockpile and Baseline Disposal System, 2
OVT Performance, 3
Excursions and Upsets During OVT, 5
Findings, 6
Recommendations, 10

1 OVERVIEW 12

2 THE CHEMICAL STOCKPILE AND BASELINE DISPOSAL SYSTEM 15
The U.S. Chemical Agent and Munitions Stockpile, 15
The Baseline Disposal System, 20

3 OVT PERFORMANCE 25
Productivity and Process Throughput, 25
Environmental Compliance, 31

4 EXCURSIONS AND UPSETS DURING OVT: IMPLICATIONS FOR IMPROVEMENTS AT CONTINENTAL U.S. SITES 45
Transporting and Unloading Agent and Munitions, 46
Disassembly and Draining, 46
Agent Destruction, 49
Energetics Destruction, 51
Metal Parts Decontamination, 52
Auxiliary Systems, 53
Agent Monitoring, 54
Worker Safety, 56
Management Systems and Control Systems, 57

5 FINDINGS AND RECOMMENDATIONS 60
Findings, 61
Recommendations, 66

REFERENCES AND BIBLIOGRAPHY 71

Figures

2-1	105-mm, 155-mm, 8-inch, and 4.2-inch projectiles.	17
2-2	M55 rocket and M23 land mine.	18
2-3	Bomb, spray tank, and ton container.	19
2-4	Schematic of the baseline system.	21

Tables

2-1	Composition of Unitary Munitions in the U.S. Chemical Stockpile	16
3-1	OVT Throughput	27
4-1	Summary of Occupational Lost Time and Recordable Injuries (per 200,000 employee work hours)	57

Abbreviations and Acronyms

ACAMS	Automatic Chemical Agent Monitoring System
CAMDS	Chemical Agent Munitions Disposal System
DAAMS	Depot Area Air Monitoring System
DFS	Deactivation Furnace System
DUN	Dunnage Incinerator
GA	Tabun, a nerve agent
GB	Sarin, a nerve agent
H/HD	Blister or Mustard Agents
JACADS	Johnston Atoll Chemical Agent Disposal System
LIC	Liquid Incinerator
mgd	million gallons per day
MPF	Metal Parts Furnace
NPDES	National Pollution Discharge Elimination System
OVT	Operational Verification Testing
PCBs	Polychlorinated Biphenyls
PDARS	Plant Data Acquisition and Recording System
RCRA	Resource Conservation and Recovery Act
SPORT	Single-pallet-only rocket transport
TSCA	Toxic Substances Control Act
VX	Organophosphate Nerve Agent

Executive Summary

As directed by Congress, the Department of the Army, through its Chemical Stockpile Disposal Program, has embarked on an effort to safely dispose of the U.S. stockpile of unitary chemical agents and munitions.[1] To accomplish this task, the Army has developed a "baseline" system to disassemble the munitions and separately incinerate agent, explosive components, metal parts, and dunnage. Operational Verification Testing (OVT) of the baseline system was conducted from July 1990 through March 1993 at the Johnston Atoll Chemical Agent Disposal System (JACADS).

In 1987, the National Research Council's Committee on Review and Evaluation of the Army Chemical Stockpile Disposal Program (Stockpile Committee) was established at the request of the Army to provide technical advice and counsel on the Army's Chemical Stockpile Disposal Program. Specifically, the committee was tasked to monitor OVT. This effort has included review of OVT results as reported by MITRE, as well as direct observation of one of the ongoing tests at JACADS. On July 16, 1993, the Stockpile Committee issued a preliminary short report, *Evaluation of the Johnston Atoll Chemical Agent Disposal System Operational Verification Testing: Part I*. This preliminary report recommended the initiation of systemization at the first continental U.S. Army disposal facility scheduled to come on line, the Tooele Chemical Agent Disposal Facility, and the use of systemization to implement improvements relating to safety, environmental performance, and plant efficiency.

It is important to recognize that the Stockpile Committee has endorsed the baseline system for the disposal of the chemical stockpile in its OVT *Part I* report and in its recent major report *Recommendations for the Disposal of Chemical Agents and Munitions*. These reports document the capability of the

[1] The term unitary is used for a chemical loaded in munitions or stored in the form of a lethal material. More recently, binary munitions have been produced in which two relatively safe chemicals are loaded in separate compartments to be mixed to form a lethal agent after the munition is fired or released. Binary munitions are not stockpiled in the United States and thus are not included in the present disposal program.

baseline system to safely dispose of the chemical stockpile. Although the Johnston Island facility did experience numerous problems during OVT, the Stockpile Committee see no "show stoppers" in these problems. No such system can be completely without problems, and the baseline system has been properly designed with multiple levels of safety to contain problems before they become hazards to the workers or surrounding communities. In this report, *Part II*, the committee focuses on areas and issues relating to safety, environmental performance, and plant efficiency where changes and improvements to the baseline system can and should be implemented prior to initiating destruction of agent and munitions at the Tooele Chemical Agent Disposal Facility. These changes and improvements are designed to further strengthen the system as it evolves for application at continental U.S. sites.

Indeed, since the committee began preparing this report, many of the changes and improvements recommended herein have already been implemented. The committee presents this report during the Tooele systemization process, before agent operations are scheduled to begin, to assist the Army with safe, timely, and effective modifications.

THE CHEMICAL STOCKPILE AND BASELINE DISPOSAL SYSTEM

The U.S. unitary chemical agent and munitions stockpile consists of bombs, mines, mortar rounds, rockets, artillery projectiles of various sizes, and bulk (ton and spray tank) containers, all of which contain or are used to store the basic types of chemical agents: nerve agents (GB, VX, and a small amount of GA) and blister agents (H, HT, HD, and a small amount of Lewisite). This stockpile is stored at Johnston Island in the Pacific Ocean and at eight sites in the continental United States.

OVT was conducted in four campaigns, or phases, with a representative variety of munitions and containers and the principal types of agents in the stockpile. The four phases were—

- OVT1—M55 rockets containing Sarin, or GB, an organophosphonate nerve agent (7,490 rockets destroyed over a 7-month period);
- OVT2—M55 rockets containing VX, an organophosphonate nerve agent (13,889 rockets destroyed over a 19-week period);
- OVT3—One-ton (bulk) containers containing the blister agent HD (67 containers destroyed over a 4-week period); and
- OVT4—105-mm M60 projectiles containing the blister agent HD (18,949 projectiles destroyed over a 22-week period).

Congress has mandated that the Army successfully demonstrate the baseline system during OVT before proceeding with systemization and full operation of any demilitarization facility in the continental United States. The first continental site facility, at Tooele Army Depot, Utah, was scheduled for 18-month systemization testing beginning in August 1993. The systemization process will consist of testing and operating, with agent surrogates, all furnaces and associated pollution abatement systems, automated munition disassembly machines, heating and ventilation systems, and electrical and plumbing systems, to ensure that the facility is capable of safe and effective operation prior to attempting the destruction of actual chemical agent.

The baseline system disassembles the munitions with specialized, automated equipment and divides the materials into four separate processing streams, which go to four specialized furnaces or incinerators for destruction or decontamination:

- chemical agent, to the liquid incinerator;
- energetic materials, to the deactivation furnace (rotary kiln);
- metal parts, to the metal parts furnace; and
- packing materials and dunnage, to the dunnage furnace.

Each furnace or incinerator is equipped with an afterburner and pollution abatement system.

OVT PERFORMANCE

Productivity and Process Throughput

Process throughput goals were not achieved consistently, during JACADS OVT, due to the prototype nature of the plant, the limited test durations, and the focus on process safety.

Actions to improve process performance were identified during the OVT campaigns. Those that were implemented during OVT resulted in improved performance, as reflected in increased throughput in later OVT phases. The identified corrective actions can be expected to yield additional improvements to process performance over time, particularly if, following safety analysis and appropriate testing, more thoroughly engineered improvements can be implemented during systemization at Tooele.

It is not possible to accurately predict the processing rates for each munition to be demilitarized at continental U.S. facilities. As the system matures and additional operating experience is obtained, throughput, reliability, and availability are all expected to increase. In any event, failure to achieve design throughput rates is not expected to pose significant impacts

on the disposal program's life-cycle cost or schedule. Because of extensive planned downtimes for munitions and agent changeovers, and large nonproduction costs and schedules (e.g., for plant construction and dismantling), total disposal program costs and duration are not highly sensitive to operational throughput.

Environmental Compliance

The JACADS OVT results demonstrated the capability of the baseline system to process a range of agents and munitions, meet federal emission standards, and operate without significant environmental impact.

The automatic continuous agent monitoring system operated to detect agent if it was present, as confirmed by more sensitive analysis of the depot area agent monitoring system, which collects a larger sample volume during its detection cycle. Agent alarms occurred frequently throughout the campaign; however, all but one were determined to be false alarms. These false alarms were due to electronic noise, operator errors, products of incomplete combustion, or interfering chemicals, all of which could be reduced. The true alarm that did occur indicated a small release of agent due to operator error during a shutdown period; this release did not present a potential environmental or health impact. Since no agent was detected in the exhaust stacks during destruction operations, destruction removal efficiency in all cases exceeded the 99.99 percent efficiency required by the Resource Conservation and Recovery Act (RCRA).

Non-agent air emissions from JACADS were maintained within RCRA-permitted limits. The high concentration levels of NO_x emitted when destroying VX may require additional gas treatment to meet Clean Air Act requirements at specific continental U.S. sites. In three out of four performance trial burns, the destruction of polychlorinated biphenyls (PCBs) was better than required by the Toxic Substances Control Act (TSCA). The deactivation furnace system at Tooele will have an improved afterburner design. This design will be employed at all continental U.S. sites and should enable U.S. plants to comply with TSCA requirements.

Some areas of plant activity and operation will require greater attention during systemization at Tooele. RCRA-required compliance testing on the pollution abatement system for the brine reduction area and the dunnage incinerator was not performed during OVT. The environmental performance of these two systems must be determined and their acceptability confirmed prior to destroying chemical agent at Tooele, or alternative waste disposal methods must be developed.

During OVT, there were numerous administrative noncompliances with RCRA requirements concerning timely notification of facility modifications, tracking, accumulation and storage, and waste minimization. While these noncompliances decreased as the Army gained experience with the RCRA requirements throughout four OVT campaigns, by the end of OVT4, JACADS personnel were still unable to comply fully with certain procedural provisions of the RCRA permit. Two areas of administrative compliance remain concerns: timely notification to the Environmental Protection Agency of facility modifications to JACADS, and the accumulation of large quantities of hazardous waste, owing to an essentially nonexistent waste minimization program. (A waste minimization program was put in place late in the OVT program.)

EXCURSIONS AND UPSETS DURING OVT

The JACADS OVT results provide additional assurance of the capability of the baseline system to destroy chemical agents and munitions safely. Accident frequency during OVT was comparable with chemical industry operational norms. The experience with various operational upsets and failures (i.e., deviations from normal design operations) that occurred during OVT demonstrated that the multiple layers of protection designed into JACADS can provide for safe operation, even when some failure sequences incapacitate one or more protection layers.

Analysis of the types of failure incidents described in the MITRE OVT reports does suggest some areas (e.g., tracking munitions, handling of contaminated or potentially contaminated wastes, and better housekeeping), where opportunities exist for improved safety performance. These opportunities should be investigated and evaluated during systemization testing at the Tooele Chemical Agent Disposal Facility.

Another indication of safety performance is worker safety history. Low industrial accident rates are indicative of general safety consciousness, good housekeeping, and conformance to established safety procedures over an extended period of time. The overall lost workdays injury rates during OVT were below the goals set, and there was no exposure of any workers to agent. However, the recordable injury rate increased when suited workers were continuously stationed in the munitions processing bay to handle frequent operational disruptions of the automated systems during OVT4. The use of operators in areas where agent is being processed is undesirable and should not be planned for continental U.S. sites.

FINDINGS

The Stockpile Committee reached the following findings about OVT process performance, environmental compliance, and excursions and upsets.

Process Performance

Baseline system. JACADS OVT provided additional assurance that the baseline system is capable of the safe disposal of the Army's chemical stockpile.

Throughput achievement. JACADS OVT process throughput was generally less than the goals specified for OVT. Reasons for this included equipment failures and design inadequacies typical of a prototype facility. Actions to improve process performance were identified during OVT and some were implemented during OVT. These measures can be expected to yield additional process performance improvements over time.

Impact of reduced process performance. A throughput shortfall of the magnitude observed during JACADS OVT will have relatively little impact on either total program costs or the demilitarization schedule.

Environmental Compliance

Agent emissions. There was no detected emission of agent during normal operations. The only confirmed emission incident, which occurred during shutdown, was well below allowable stack concentration levels. Since no agent was measured in the exhaust stacks during destruction operations, in all cases destruction removal efficiency was better than the RCRA-required 99.99 percent.

For all agents, the liquid incinerator demonstrated better than 99.9999 percent destruction removal efficiency. For the metal parts furnace, the HD destruction removal efficiency could only be verified to be greater than 99.9996, the highest destruction removal efficiency that could be verified by the agent monitoring system. Three states (Indiana, Kentucky, and Maryland) now require 99.9999 percent destruction removal efficiency for all furnaces, a more stringent requirement than the 99.99 percent requirement at JACADS. The Army may find it necessary to improve agent monitoring sensitivity to verify the more stringent requirement.

Non-agent emissions. Non-agent air emissions from JACADS were maintained within RCRA-permitted limits. The high levels of NO_x emitted when destroying VX may require additional gas treatment to meet Clean Air Act requirements at specific continental U.S. sites.

Support system performance. RCRA-required compliance testing on the brine reduction area pollution abatement system and the RCRA trial burn of the dunnage incinerator was not performed during OVT.

Hazardous waste handling and RCRA requirements. There were numerous administrative noncompliances of RCRA procedural requirements for tracking, accumulation and storage, and waste minimization. These noncompliances decreased as the Army gained experience with RCRA requirements over the four OVT campaigns.

Compliance with administrative requirements. At JACADS there were instances of administrative noncompliance with permitting requirements for plant operations, data handling, and waste minimization, among others areas. The committee takes such instances as a serious issue and believes that their repetition at continental U.S. sites could lead to regulatory enforcement or citizen lawsuits, with the potential for long operational delays that may jeopardize treaty compliance or overall safety.

RCRA permit. The RCRA permit includes very detailed requirements for data collection, retention, and reporting; operating conditions and waste feeds to the furnaces; waste handling and storage; and other operations. A detailed review of the RCRA permit by the Army during the first OVT campaign showed over one hundred ambiguities, errors, omissions, and other problems in the permit itself, which complicated compliance by the operations and maintenance contractor and the Army.

Excursions and Upsets: Safety and Operability Implications for Continental U.S. Sites

Overall safety management. Many of the failure events observed during OVT involved human error that indicated deficiencies in procedures, training, or management priorities.

Enforcement of safety requirements. Safety violations, observed during OVT such as the removal of interlocks, improper responses to critical alarms, and operation with some safety systems deactivated, are serious problems that require changes in training, job priorities, and management accountability.

The committee recognizes that the Chemical Demilitarization Training Facility at Aberdeen Proving Ground will provide a mechanism to address these issues.

Procedures for safety evaluations of human and equipment failures. The JACADS safety department's review process does not make an adequate connection between the analysis of human and equipment failures and safety. Accident event analysis is also an important way to identify and correct apparent deficiencies in compliance with procedures.

Support system performance. Reliable operation of power supplies, heating, ventilating, and air conditioning systems and control systems is essential to overall operational safety. Auxiliary systems such as the dunnage furnace and brine reduction area were not satisfactorily modified and tested during OVT after problems were experienced. (The RCRA compliance test on the brine reduction area was completed after OVT.)

Plant monitoring systems. The current automated chemical agent monitoring system (ACAMS) is sensitive enough to detect very small concentrations of agent, but high sensitivity results in many false alarms. Monitors are presently able to detect only one agent at a time and, for major releases, may have a sampling time that is longer than required for timely response. Additional and alternative instrumentation appears to have the potential to minimize these problems. The occurrence of false alarms may induce complacency in plant operators; strong action is needed by the Army to reduce false alarm rates. The Stockpile Committee's recently issued monitoring report addresses improvements in the monitoring systems for the prompt detection and identification of each type of agent.

Furnace operational problems. In the liquid incinerator, gaseous products condense in the secondary chamber to a glassy slag of condensed salts. The slag plugs gas flow passages and corrodes brick linings, causing shutdowns for lining repair and manual removal of slag. A new hot slag removal system is planned for Tooele.

With regard to the metal parts furnace, experience has shown that a larger quantity of gelled HD than initially predicted fails to drain from the munitions or ton containers that are fed to the furnace. These large residues substantially reduce the processing rate because of an inappropriate regulatory restriction on agent feed to this furnace. An apparent detonation of rocket burster pieces during OVT2 penetrated the half-inch deactivation furnace wall

at JACADS. The deactivation furnace at Tooele has a two-inch wall thickness, which is intended to withstand such a detonation. In addition, kiln structural bolts and the feed chute systems were redesigned based on JACADS OVT experience.

Review of additional worker operations to compensate for mechanical operational problems. During both OVT3 and OVT4, problems with the agent accessing and draining equipment (e.g., due to gelled mustard agent) were handled by having suited workers monitor operations. Removal of salts from the liquid incinerator also required manual operations.

Inventory control of agent. The deactivation furnace system and metal parts furnace are designed to handle limited quantities of residual agent. The current JACADS RCRA permit requires that munitions and tanks be drained so that less than 5 percent of the agent contents remain. Munitions that cannot be drained to a 5 percent residual because of gelling (or uncertainty in gauging) can be fed to the furnaces at reduced rates. Guidelines for this feed process should be clearly defined in terms of the furnace's actual capacity, and the RCRA permit limitations should be established based upon that capacity.

Munitions tracking capability. Deficiencies observed at JACADS in munition tracking are a safety concern and call for modification. During OVT4, there were eight occasions on which tracking of munitions failed, resulting in improperly processed munitions moving ahead and creating potential problems. Furnaces receiving the wrong feed seriously compromise one of the key advantages of the baseline system. Munitions tracking is critical to the safe operations of the special purpose furnaces.

Training programs. The Chemical Demilitarization Training Facility, Aberdeen Proving Ground, Maryland, began operations in early 1992 utilizing full-scale munitions disassembly and drain machines—without agent. Members of the Stockpile Committee have visited Aberdeen several times to examine the training program and the operations and procedures of the facility. The committee believes that this facility and training program are an essential part of the overall Chemical Stockpile Disposal Program, since the availability of well-trained employees is critical to the safe and efficient conduct of these hazardous chemical disposal operations. The Army is to be commended for its recognition of the need for, and establishment of, this facility. The committee plans to monitor the effectiveness of this training program during systemization and agent operations at Tooele.

RECOMMENDATIONS

1. *Give safety considerations priority over production goals.*

2. *Proceed with Tooele systemization, and during systemization, conduct needed testing and improvement activities, including the following:*

- *Develop and demonstrate an improved agent monitoring and identification system.*

- *Complete the brine reduction area (to include its pollution abatement system) performance tests, or develop a satisfactory brine disposal alternative.*

- *Demonstrate the dunnage furnace performance with various levels of chlorinated waste; if needed, either modify the pollution abatement system design (e.g., add acid gas scrubbing) or limit feed materials to those that can be handled by the existing design; alternatively, satisfactory land disposal options must be identified.*

- *Review the probable levels of NO_x production from VX destruction and the allowable emission levels at the other continental U.S. sites requiring VX destruction; if appropriate, develop needed NO_x abatement systems.*

- *Develop and demonstrate the proposed hot-slag removal system for the liquid incinerator system.*

- *Eliminate furnace feed errors by improved monitoring and control of the deactivation furnace and metal parts furnace feed systems and by improved methods for tracking the various types of munitions.*

- *Address all problems associated with residual gelled mustard, in particular, the use of suited personnel to perform functions that were intended to be automated.*

3. *Establish and maintain close working relationships with permitting agencies, and support these efforts with careful analysis of operating parameters to ensure that permits provide for safe destruction of agent, adherence to regulatory requirements, and effective plant operations.*

4. *Establish programs, procedures, and management oversight to ensure continuing compliance with all environmental regulations.*

5. *Develop systems to improve overall management of safety.*

6. *Complete the risk assessment for the Tooele Chemical Agent Disposal Facility during the systemization period.*

1

Overview

In accordance with the Department of Defense Authorization Act of 1986 and subsequent legislation, Congress directed that the nation's stockpile of unitary chemical warfare agents and munitions, currently located on Johnston Island in the Pacific Ocean southwest of Hawaii and at eight storage sites in the continental United States, be destroyed by dates that have been successively extended to December 31, 2004. In the early 1980s, the Army had explored a variety of disposal technologies, including chemical neutralization, dumping at sea, consolidation at a national site or regional sites with subsequent destruction, disassembly followed by incineration of components, and others.

Ultimately, the Army selected disassembly and thermal destruction as the preferred means for disposing of the chemical stockpile. A 1984 National Research Council report supported that decision (NRC, 1984). Subsequently, the "baseline" incineration system, which is described in more detail in Chapter 2, was developed by the Army for its Chemical Stockpile Disposal Program. This system incorporates mechanical and other processes to gain access to agent in a variety of containers and munitions, and to separate the agent from metal parts and energetics in separate process streams. Incineration of the agent and decontamination of metal parts and all components is carried out in separate furnaces in which all effluent streams are processed to meet environmental discharge standards.

Baseline system components were developed largely at the Chemical Agent Munitions Disposal System, an experimental facility at the Tooele Army Depot, Utah. Construction and systemization of the first fully integrated assembly of this system, the Johnston Atoll Chemical Agent Disposal System (JACADS), was completed by July 1990 on Johnston Island.

Public Law 100-456 required that the Army operate the JACADS plant successfully during a period of Operational Verification Testing (OVT) before proceeding with systemization and full operation of any demilitarization facility in the continental United States.

JACADS OVT was conducted in four campaigns, or phases, processing a representative variety of munitions and containers and, at one time or another, each of the major types of agents found in the stockpile. The tests included—

- OVT1—M55 rockets containing the nerve agent GB (MITRE, 1991);
- OVT2—M55 rockets containing the nerve agent VX (MITRE, 1992);
- OVT3—Ton (bulk) containers of the blister agent HD (MITRE, 1993a); and
- OVT4—105-mm M60 Projectiles containing the blister agent HD (MITRE, 1993b).

The OVT program was conducted from July 16, 1990, through March 6, 1993. The MITRE Corporation, a not-for-profit corporation, was selected to prepare criteria for the evaluation of OVT and to perform that evaluation. Upon completion of each OVT campaign, MITRE produced a separate report (as cited above for OVT1 through OVT4). At the conclusion of OVT, MITRE produced a summary evaluation report (MITRE, 1993c).

Completion of OVT at JACADS is a milestone in the overall Chemical Stockpile Disposal Program, particularly because it affects the initiation of activities at the continental storage sites. The Chemical Agent Disposal Facility at Tooele Army Depot, Utah, completed on August 11, 1993, was scheduled to begin systemization immediately following certification by the Army to Congress of JACADS OVT success.

The remote location of JACADS was advantageous for the first operational chemical disposal facility. However, this remoteness has made engineering changes extremely difficult and time consuming. More important, the pace of OVT, and the attempts to demonstrate production performance within arbitrary test periods, resulted in some "quick fix" solutions that might not be adequate for reliable, full-time plant operations.

The 18-month systemization program scheduled at Tooele will provide opportunities for the Army to make improvements to the baseline system. Systemization consists of testing and operating, with agent surrogates, all furnaces and associated pollution abatement systems, automated munition disassembly machines, heating and ventilation systems, and electrical and plumbing systems. This rigorous testing is required to ensure that the facility is capable of safe and effective operation prior to attempting the destruction of actual chemical agent. Because systemization does not involve actual chemical agent operations, the Army can conduct thorough testing of most improvements in a safe environment. For those improvements requiring the presence of agent, such as advanced agent monitoring components, testing can

be conducted in parallel at JACADS or at the Chemical Agent Munitions Disposal System at Tooele.

The National Research Council Committee on Review and Evaluation of the Army Chemical Stockpile Disposal Program (Stockpile Committee) was established in 1987 at the request of the Army, to provide technical advice and counsel on its disposal program. Specifically, the committee was tasked to monitor OVT. This task has included review of the MITRE OVT reports, as well as direct observation of ongoing testing at JACADS.

Following the conclusion of OVT in March 1993, the Stockpile Committee issued a preliminary report, *Evaluation of the Johnston Atoll Chemical Agent Disposal System Operational Verification Testing: Part I* (NRC, 1993a). This report found that OVT provided additional assurance that the baseline system is capable of the safe disposal of the Army's chemical stockpile and recommended that the Army initiate systemization of the almost completed Tooele Chemical Agent Disposal Facility. Additionally, the committee found that OVT identified opportunities to improve operations and performance with regard to safety, environmental performance, and plant efficiency. The Stockpile Committee recommended that systemization at Tooele be used to implement these improvements prior to initiating the destruction of agent and munitions.

It is important to recognize that the Stockpile Committee has endorsed the baseline system for the disposal of the chemical stockpile in its OVT *Part I* report and in its recent major report *Recommendations for the Disposal of Chemical Agents and Munitions* (NRC, 1994a). These reports document the capability of the baseline system to safely dispose of the chemical stockpile. Although the Johnston Island facility did experience numerous problems during OVT, the Stockpile Committee saw no "show stoppers". No such system can be completely without problems, and the baseline system has been properly designed with multiple levels of safety to contain problems before they become hazards to the workers or surrounding communities. In this report, *Part II*, the committee focuses on areas and issues relating to safety, environmental performance, and plant efficiency where changes and improvements to the baseline system can and should be implemented prior to initiating destruction of agent and munitions at the Tooele Chemical Agent Disposal Facility. These changes and improvements are designed to further strengthen the system as it evolves for application at continental U.S. sites.

Indeed, since the committee began preparing this report, many of the changes and improvements recommended herein have already been implemented. The committee presents this report during the Tooele systemization process, before agent operations are scheduled to begin, to assist the Army with safe, timely, and effective modifications.

2

The Chemical Stockpile and Baseline Disposal System

THE U.S. CHEMICAL AGENT AND MUNITIONS STOCKPILE

The U.S. chemical stockpile consists of bombs, mines, mortar rounds, rockets, spray tanks, artillery projectiles of various sizes, and bulk (ton) containers, which store two basic types of chemical agents: nerve agents (GB, VX, and a small amount of GA), and blister or mustard agents (H, HT, HD, and a small amount of Lewisite). This stockpile is stored at Johnston Island and at eight sites in the continental United States. Table 2-1 describes the relevant components of munitions in the stockpile.

Agents are contained in a variety of munitions and in bulk containers, as illustrated in Figures 2-1 to 2-3. Artillery projectiles, shown in Figure 2-1, are heavy-walled steel vessels. In addition to agent, some of these projectiles contain fuses and explosive bursters (which disperse the agent upon detonation), some contain only bursters, and some contain no explosives.

The M55 rocket, shown in Figure 2-2, is a thin-skinned aluminum rocket that contains a fuse, a burster, and a solid propellant rocket motor in addition to agent. The M23 land mine, shown in Figure 2-2, is a steel vessel containing two explosive burster charges as well as agent. Bombs, spray tanks, and ton containers, shown in Figure 2-3, are bulk containers without explosives. The ton container is a standard chemical container used in industry, which has steel walls of about 3/4-inch thickness.

M55 rockets are packed in fiberglass tubes (some of which contain small amounts of polychlorinated biphenyls—PCBs), which also act as launch tubes. These rockets are packaged by being strapped to wooden pallets. Land mines are packed three to a steel drum along with three separate fuses. Some 105-mm projectiles are packed in wooden crates, two to a crate, with attached cartridge cases containing propellant. These projectiles are later reconfigured by removing the propellant and then strapping them to wooden pallets.

Packing materials and other miscellaneous processing materials are collectively referred to as dunnage.

TABLE 2-1 Composition of Unitary Munitions in the U.S. Chemical Stockpile

Munition Type	Agent	Fuse	Burster	Propellant	Dunnage
M55 115-mm rockets[a]	GB, VX	Yes	Yes	Yes	Yes
M23 land mines	VX	Yes[b]	Yes	No	Yes
4.2-in. mortars	Mustard	Yes	Yes	Yes	Yes
105-mm cartridges	GB, mustard	Yes	Yes	Yes	Yes
105-mm projectiles	GB, mustard	Yes[c]	Yes[c]	No	Yes
155-mm projectiles	GB, VX, mustard	No	Yes[c]	No	Yes
8-in. projectiles	GB, VX	No	Yes[c]	No	Yes
Bombs (500-750 lb)	GB	No	No	No	Yes
Weteye bombs	GB	No	No	No	No
Spray tanks	VX	No	No	No	No
Ton containers	GB, VX, GA[d], mustard, Lewisite[e]	No	No	No	No

[a] M55 rockets are processed in individual fiberglass shipping containers.
[b] Land mines and their fuses are stored together but not assembled.
[c] Some projectiles have not been put into explosive configuration.
[d] GA (Tabun), or ethyl-N,N-dimethylphosphoramidocyanidate, is a nerve agent.
[e] Lewisite, or Dichloro(2-chlorovinyl) arsine, is a volatile arsenic-based blister agent.

SOURCE: Adapted from PEIS, 1988.

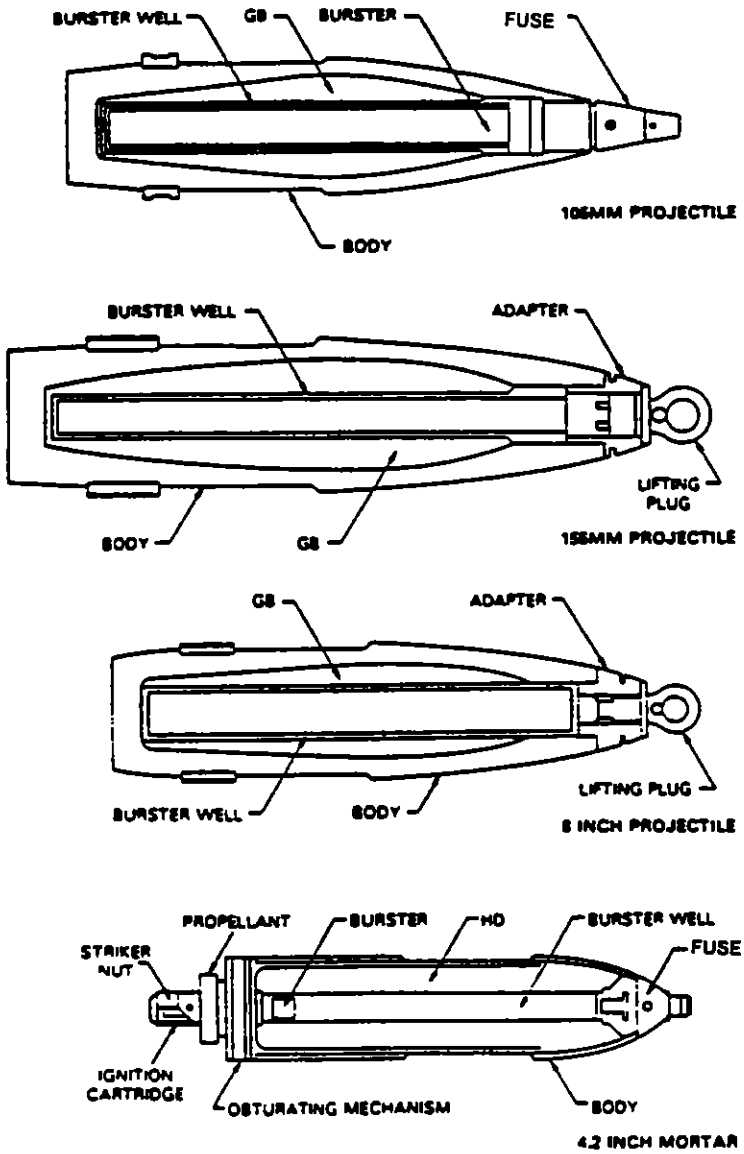

FIGURE 2-1 105-mm, 155-mm, 8-inch, and 4.2-inch projectiles.

SOURCE: USATHAMA, 1982, 1983; NRC, 1993b, 1994a.

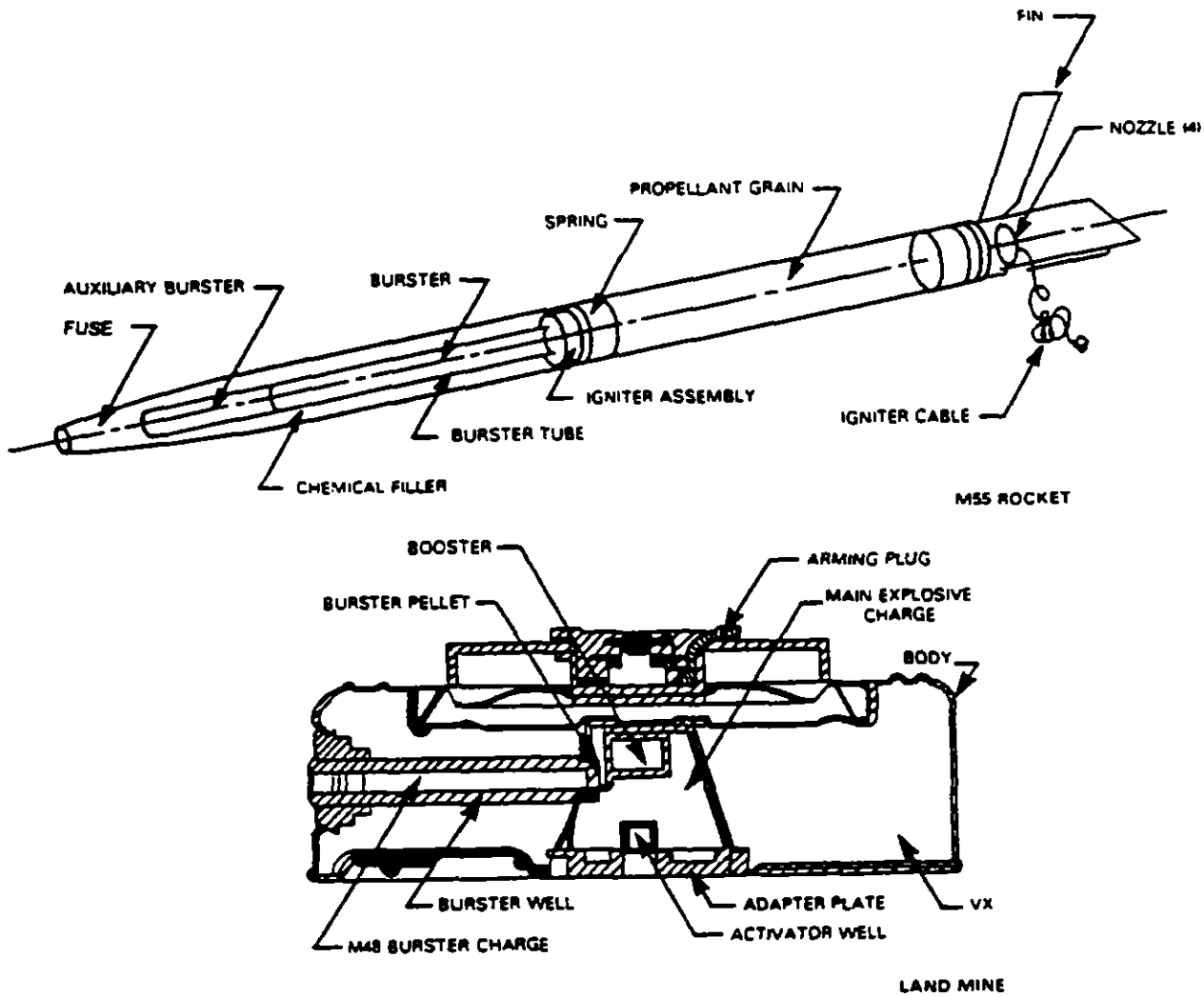

FIGURE 2-2 M55 rocket and M23 land mine.

SOURCE: USATHAMA, 1982, 1983; NRC, 1993b, 1994a.

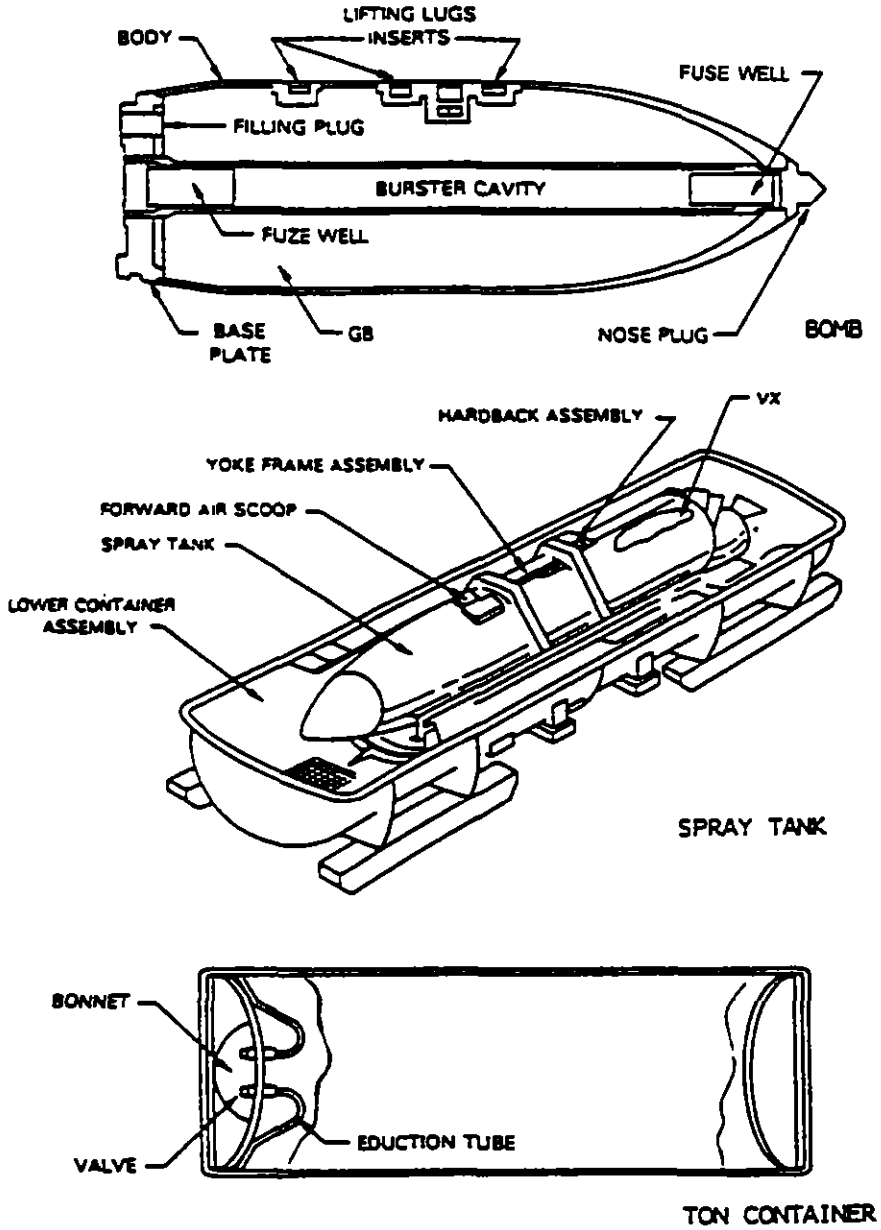

FIGURE 2-3 Bomb, spray tank, and ton container.

SOURCE: USATHAMA, 1982, 1983; NRC, 1993b, 1994a.

THE BASELINE DISPOSAL SYSTEM

The baseline system disassembles the munitions with various specialized, automated equipment and then divides the materials into separate processing streams. Operations involving energetic material are conducted inside an explosion-proof enclosure. Each material is then processed in one of four specialized furnaces for decontamination and destruction. These materials are:

- chemical agent, to the liquid incinerator;
- energetic materials, to the deactivation furnace system (rotary kiln);
- metal parts, to the metal parts furnace; and
- packing materials and dunnage, to the dunnage furnace.

In addition, decontamination solutions (e.g., sodium hydroxide in water) used throughout the facility must be processed for disposal. Each incinerator is equipped with an afterburner and pollution abatement system. Materials discharged from the destruction system include carbon dioxide, water, inorganic salts (which require disposal as hazardous materials), and metal parts. Ventilation air is discharged from the facility through activated charcoal filters to remove fugitive agent emissions. Figure 2-4 shows a schematic of the overall baseline system, which involves disassembly/draining, agent destruction, energetics destruction, metal parts decontamination, and dunnage destruction steps.

Disassembly/Draining

Agent is drained from munitions and containers (neither of which was designed for simple drainage) and stored in liquid-agent storage tanks. The heavy-walled projectiles and mortars are disassembled to gain access to the explosives within the munitions. Fuses and bursters are removed (along with a small explosive booster positioned between the two) by a projectile/mortar disassembly machine. These explosive elements are punched or sheared to expose sufficient surface area to ensure that the fragments will burn rather than detonate when incinerated. All explosive-handling operations for projectiles and other munitions are carried out in a containment room designed to withstand detonation of all explosives (of a controlled quantity) within the room. A multipurpose demilitarization machine located in a munitions processing bay then extracts a press-fit burster well from the projectile body and drains agent from the munition. The ventilation air from these rooms is generally contaminated with agent vapor and is sent directly to the charcoal scrubbing system.

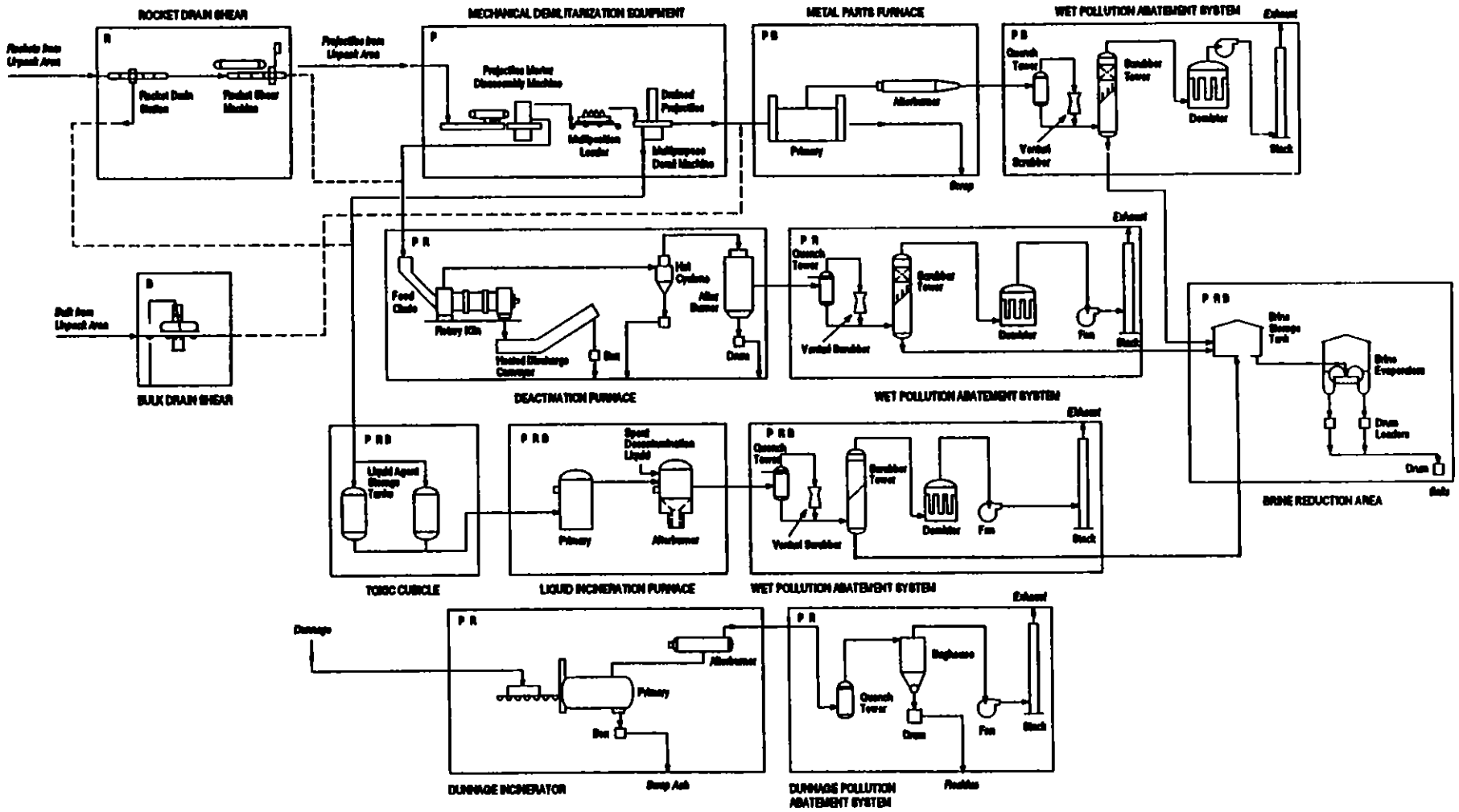

FIGURE 2-4 Schematic of the baseline system.

SOURCE: PEIS, 1988; NRC, 1993b, 1994a.

Rockets, still in their fiberglass launch tubes, are punched and drained in the rocket shear machine located in the explosive containment room. The rocket and its launch tube are sheared into eight segments, separating the fuse from other explosive elements and dividing both the burster and the rocket propellant into segments that can be safely incinerated. This shear machine is also used to shear projectile bursters into fragments that can be incinerated safely.

Land mines, manually unpacked from their drum containers in a glovebox, are punched and drained much like the rockets. Their explosive charge is punched to expose sufficient surface area to prevent detonation without removal of the charge from the mine body.

Ton containers, spray tanks, and bombs (nonexplosively configured) are punched and drained at a bulk drain station. Agent from these and all other munitions is pumped into liquid-agent storage tanks located in a toxic cubicle, for subsequent incineration.

Agent Destruction

Following the draining of munitions and containers, the chemical agent is accumulated in storage tanks and is subsequently burned in the liquid incinerator, which destroys the material at about 2700°F in a primary combustion chamber. A secondary combustion chamber (afterburner) is used to ensure complete combustion. Used decontamination solution (e.g., from cleaning up minor spills) is processed through the incinerator afterburner. Exhaust gases are then sent to a pollution abatement system.

Energetic Materials Destruction

The explosive components of the munitions, along with associated small parts (fuse parts, booster cups, burster tubes, and rocket segments), launch-tube segments, and small quantities of residual agent are burned in the deactivation furnace system (rotary kiln). Energetics are cut into pieces to provide sufficient surface area for burning, thus reducing the potential for detonation, and then fed into the furnace in a controlled fashion. Metal parts and fiberglass material are discharged from the deactivation furnace into an electrically heated discharge conveyor where they are thermally decontaminated to a condition suitable for disposal.

Brine Reduction

The brine reduction area collects, stores, evaporates and dries process brines (high concentrations of various salts in water) from the deactivation furnace system, liquid incinerator, and metal parts furnace pollution abatement systems. Operation of the area produces salt that contains 10 percent or less water by weight. These residues are drummed for disposal as hazardous waste.

Metal Parts Decontamination

Larger metal parts (ton containers, projectiles, etc.) are thermally decontaminated in the metal parts furnace so they can be released as scrap. Though largely empty, these vessels contain residual agent when they are fed to the furnace. The residual quantity varies from a few percent of the original charge, to relatively large quantities if the material has gelled in storage (a problem seen with mustard agents).

Dunnage Destruction

Dunnage is burned in a separate dunnage incinerator. Difficulties with this unit at JACADS have delayed satisfactory operation, and dunnage has been packaged and disposed of in hazardous waste landfills. Protective clothing for personnel working in agent-contaminated areas (demilitarization protective ensemble) was to have been destroyed in this incinerator, but concerns raised about potential dioxin formation and emissions from the polyvinylchloride material prompted landfill disposal for this component of the dunnage.

Pollution Abatement Systems

Each of the four furnaces is equipped with an afterburner, to ensure complete combustion, and a pollution abatement system, to cool and scrub the exhaust gases and remove particulates before they are discharged through a stack. The liquid incinerator, metal parts furnace, and deactivation furnace system have similar pollution abatement systems, each consisting of a quench tower, a venturi scrubber, a packed-bed scrubber, a candle mist-eliminator vessel, brine/quench recycle pumps, and an induced-draft blower. The deactivation furnace system also has a cyclone separator. Exhaust gases from the liquid incinerator, deactivation furnace system, and metal parts furnace are discharged through a common stack while the dunnage furnace system has its own stack. Dunnage furnace afterburner exhaust gases are cooled in the quench tower of its pollution abatement system, and a baghouse is used to remove particulates. Water vapor and entrained particulates from the brine reduction area are collected in a baghouse before that exhaust is discharged to the atmosphere.

3

OVT Performance

PRODUCTIVITY AND PROCESS THROUGHPUT

As indicated in Chapter 1, OVT was conducted in four phases, with a representative variety of munitions and containers, and all principal agents. The following munitions were processed during OVT:

- M55 rockets containing agent GB (7,490 rockets destroyed over a 7-month period). The explosives containment room, the rocket shear machine, the toxic cubicle, the liquid incinerator, and the deactivation furnace system were tested with associated pollution abatement systems.
- M55 rockets containing agent VX (13,889 rockets destroyed over a 19-week period). The explosives containment room, the rocket shear machine, the toxic cubicle, the liquid incinerator, and the deactivation furnace system were tested with associated pollution abatement systems.
- One-ton containers containing blister agent HD (67 containers destroyed over a 4-week period). The bulk drain station, the toxic cubicle, the liquid incinerator, and the metal parts furnace were tested with associated pollution abatement systems.
- 105-mm M60 projectiles containing blister agent HD (18,949 destroyed over a 22 week period). The explosives containment room, the projectile/mortar disassembly machine, the multipurpose demilitarization machine, the toxic cubicle, the deactivation furnace system, the liquid incinerator, and the metal parts furnace were tested with the associated pollution abatement systems (MITRE, 1993c, pp. 4-4, 4-14, and 4-17).

Process throughput at JACADS was measured as the average rate at which the plant destroyed munitions over a specified time. This value was presented in the MITRE OVT reports as rockets per hour (R/hr), projectiles per hour (P/hr), or (ton) containers per hour. The Army and its contractors recognized that JACADS is essentially a prototype facility and that the tests

would be too brief to enable the facility to reach its design throughput rates. As a result, the Army established two "milestone" demonstration goals:

1. Demonstrate that the process designer's average throughput rates can be achieved during at least one operating shift during the test. This was called the "best shift" throughput goal.
2. Demonstrate a "reasonable average throughput rate" over an extended period of operation, a rate established at about two-thirds of the designer's average rate. This goal was called the "full rate" throughput. (MITRE, 1993c, p. 4-2).

The MITRE evaluations of the four OVT campaigns, summarized in Table 3-1, found that these goals were not consistently achieved. However, these shortfalls are not surprising. Complex new industrial facilities, processes, and procedures typically go through substantial shakedown periods before they mature and achieve their design average process rates. As a prototype demilitarization plant, JACADS's greatest accomplishment was in demonstrating acceptable safety and emissions performance. Also, as a result of JACADS's operational experience, the Army learned a great deal about possible modifications and improvements that can be applied both to JACADS and to disposal facilities to be constructed in the continental United States. For example, improvements made as a result of OVT1 experience led to higher production rates in OVT2.

The results of OVT1 through OVT4 were examined to determine the causes of throughput limitations to infer the potential impact of these factors on future operations. The OVT results suggest that greater throughput can be achieved by continued improvements in a limited number of areas.

In OVT1 and OVT2, downtimes and slowdowns were defined as "documented" (longer than 15 minutes) and "undocumented" (15 minutes or less). Undocumented downtimes were attributed to minor problems, and specific reasons for each were not recorded. However, the total operating time lost due to these many occurrences was significant. Equipment improvements, modified operating procedures, and better training resulted in the reduction of undocumented downtime in OVT2 (MITRE, 1993c, pp. 4-5 to 4-7). Nonetheless, continued minor stoppages and cumulatively large downtimes cannot be totally eliminated in a safety-driven environment.

Documented downtimes were attributed to specific causes (MITRE, 1993c, p. 4-7). Some lasted many days. Certain major contributors to downtime were one-time events (e.g., the detonation in the deactivation furnace system kiln). These events and certain repeated failures (e.g., failures of kiln flange bolts and aluminum slag buildup on the heated discharge conveyor) have likely been corrected as a result of improvements that have been implemented. However, normal wear and tear from long-term operations

TABLE 3-1 OVT Throughput

OVT phase	Milestone rate	Throughput goal	Actual Results	Comments
OVT1 (M55 GB rockets)	Best shift	32 R/hr	27 R/hr	Documented and undocumented downtimes. Bottlenecks in deactivation furnace system and liquid incinerator.
	Full rate	24 R/hr	15.3 R/hr	
OVT2 (M55 VX rockets)	Best shift	32 R/hr	32 R/hr	Documented and undocumented downtimes. Bottlenecks in deactivation furnace system and liquid incinerator.
	Full rate	24 R/hr	20.6 R/hr	
OVT3 (HD ton containers)		0.7 containers/hr	0.7 containers/hr	Liquid incinerator goals met. Availability and throughput are potential problems.
OVT4 (105-mm HD projectiles)				
Projectile/mortar disassembly machine	Best shift	82.7 P/hr	74.2 P/hr	Failure of upstream systems. Bottlenecks in projectile/mortar disassembly machine and multi-purpose demilitarization machine.
	Full rate	56 P/hr	35 P/hr	
Multipurpose demilitarization machine (MDM)	Best shift	N/A	71.9 P/hr	
	Full rate	N/A	31.4 P/hr	

SOURCE: MITRE Corporation, 1991, 1992, 1993a, b; NRC, 1993a.

will continue to result in burned-out bearings, stuck or defective valves, failed sensors, and other events causing downtime. In a benign environment, repairing or replacing such components would be a minor task that could be accomplished quickly. In the toxic environment of the demilitarization facility, such routine events will likely remain significant contributors to downtime.

The deactivation furnace system bottleneck observed in OVT1 and OVT2 will be partially or totally eliminated in the continental U.S. facilities through redesign resulting from the JACADS's experience. The use of thicker system walls and other equipment modifications should enable these facilities to process rockets at a substantially higher rate than could be achieved at JACADS (MITRE, 1993c, p. 4-27).

Several separate problems contributed to the overall low availability and throughput of the liquid incinerator. At high feed rates the flame scanner had difficulty detecting a stable flame and often shut down automatically. The solution devised—reducing the agent feed rate—obviously reduced throughput.

The availability of the liquid incinerator was reduced also by the periodic need to remove accumulated glassified salt residues from the base of the secondary combustion chamber. While other incinerator deficiencies can be corrected, the salt residue problem can only be reduced, not eliminated, by design modifications. Salt removal will be a continuing maintenance problem that will affect availability and thus throughput in all demilitarization operations at JACADS (MITRE, 1993c, p. 4-28). An engineering solution, a "hot tap" to drain molten salts from the base of the liquid incinerator secondary chamber, will be tried and is expected to solve or greatly ameliorate this problem at Tooele and other continental U.S. facilities.

Liquid incinerator availability must be improved, or it could become a bottleneck during future operations. This potential bottleneck was avoided during OVT by storing drained agent in liquid-agent storage tanks until the incinerator again became available. Because of seismic concerns at Tooele, agent storage capacity has been reduced there to one 500-gallon tank (vs. the two 1,230-gallon tanks installed at JACADS). Since the storage tank contains the largest single inventory of agent on site, reducing its volume reduces the potential consequences of a major agent release.

The single 500-gallon tank at Tooele will feed two parallel liquid incinerators operating 24 hours per day. Liquid incinerator availability at Tooele will have to be improved over the JACADS experience, otherwise the storage capacity may be insufficient. Limited availability and throughput capacity of the liquid incinerator at JACADS presented the major limitation on throughput (MITRE, 1993c, pp. 4-12 to 4-15).

OVT4 was adversely affected by the performance of two systems, the projectile/mortar disassembly machine and multipurpose demilitarization machines. The design of projectiles makes them the most complex of the

munitions to be processed. To handle their several components and perform disassembly of munitions requires close integration of both the projectile/mortar disassembly machine and the multipurpose demilitarization machines. The failure of either adversely affects the throughput rate (assuming that there are no backup machines available) (MITRE, 1993c, pp. 4-18 to 4-23). Such problems in closely integrated systems are common and can be remedied by improving the reliability of each component.

An additional complicating factor in OVT4 was the condition of the agent in some projectiles. The close tolerance of parts to be disassembled together with the gelling of agent that sometimes occurs in HD-filled munitions created processing challenges. However, the JACADS OVT experience should enable future operations with artillery projectiles in general, and HD-filled munitions in particular, to be accomplished more efficiently at both JACADS and the continental U.S. sites.

Implications for Continental U.S. Facilities

The committee does not view the inability of JACADS to achieve full design throughput during OVT to be a major problem.

The JACADS OVT summary evaluation gives specific munitions performance projections for continental U.S. demilitarization sites (MITRE Corporation, 1993c, pp.4-9 to 4-12). Projecting process performance for those sites based on JACADS experience to date is difficult. The following limitations and differences complicate such projections:

- the limited duration and quantity of the tests;
- configuration and condition differences between JACADS and continental U.S. plants;[1]
- substitution of 105-mm M60 projectiles for the 155-mm projectiles originally planned to be used for the projectile test (OVT4); and
- variations during JACADS OVT from the original test plan.

The many assumptions needed to derive such projections leads the Stockpile Committee to conclude that no specific rates projected for the continental U.S. facilities based on the JACADS experience can be supported with high confidence.

The committee believes that continental U.S. demilitarization facilities will experience more reliable and efficient operations because of the JACADS

[1] The duration of disposal at all U.S. sites, with the exception of Tooele, should be shorter than the time necessary to accomplish OVT at JACADS. The Stockpile Committee therefore does not see long-term equipment performance as an issue.

experience, but the nature of the problems experienced were such that it is unrealistic to expect design throughputs to be achieved in the near future.

Throughput is one useful measure of system performance, but it cannot be considered the sole criterion of process performance success or failure. In the context of the demilitarization program, safety is the overriding criterion, and throughput becomes a secondary issue. Process performance is, however, an important issue insofar as it influences safety. Excessive startups and shutdowns resulting from system component failures create conditions under which maintenance must be performed at higher risk. Human performance under non-steady state conditions is likely to be more error prone. The unsteady state itself also increases the probability of future component failures. The aim should be to achieve steady operating conditions by minimizing process interruptions, rather than adhering to arbitrarily set throughput goals.

As the committee stated in its earlier report on OVT1, within a reasonable range throughput is not an important economic factor and is only a relatively minor factor affecting destruction schedules. According to that report (NRC, 1991)—

> Because of extensive planned down times for munitions and/or agent changeovers, overall disposal program duration is not highly sensitive to operational throughput. Overall costs are also relatively insensitive to production rates because nonproduction costs are not affected by changes in production rate. Note particularly that life cycle costs and schedules include dismantling the entire plant at the close of operations, a major non-productive task. It has actually been estimated that operation at 75 percent of design throughput would result in only an 8 percent increase in duration and a 2 percent increase in total life cycle cost. Operation at only 50 percent of design throughput would result in a 29 percent increase in duration and an 8 percent increase in total life cycle cost.

The "best shift" experience shows that when the JACADS facility was operating well, it demonstrated the capability to process munitions and containers at throughput rates in excess of the Army's average throughput goal, i.e., 75 percent of the design rate. However, OVT tests showed conclusively that the Tooele plant must operate more consistently if the 75 percent average throughput rate is to be achieved during plant operations. The changes recommended by the committee for the Tooele plant should improve the performance of that plant compared to the performance of JACADS. The system also has the potential to move to a higher level of performance as it matures (SAIL-PMR, May 1991).

ENVIRONMENTAL COMPLIANCE

Johnston Atoll is an unincorporated territory of the United States with no applicable state or local regulations; therefore, only federal environmental laws and regulations govern JACADS operations. The environmental requirements are in accordance with U.S. Environmental Protection Agency (EPA) regulations, Department of Defense and Army standards, and JACADS standing operating procedures. The regulatory provisions of the following statutes are applicable to the operation of the JACADS facility:

- the Resource Conservation and Recovery Act (RCRA);
- the Toxic Substances Control Act (TSCA);
- the Clean Water Act; and
- the Hazardous Materials Transportation Act.

In addition, releases of certain process or waste streams from JACADS that are not in accordance with design may result in reporting obligations under the Comprehensive Environmental Response, Compensation, and Liability Act.

Although provisions of the Clean Air Act are not applicable on Johnston Atoll, the Army complied with the act's standards at JACADS, because all continental U.S. plants must do so. The Department of Defense and Army standards that govern the operation of JACADS are concerned primarily with safety, worker protection, and toxic agent emissions. Adherence to these standards reinforces environmental compliance in facility operations, e.g., no measured agent emission from the liquid incinerator ensures compliance with RCRA destruction and removal efficiency requirements.

Agent Emissions

Through the RCRA permit, the EPA has established limits on the quantities of agent that may be emitted. These restrictions are supplemented by Army policy and regulations. Although a small amount of agent discharge is allowed under the operating permits for the plant, the general Army policy is that all reasonable steps be taken to achieve no detectable emissions. The design of the facility and on-line process control systems are based on meeting this objective. Thus, at JACADS the design objective was that there be no measurable discharge of agent.

There are six sources of air emissions from the JACADS facility, in addition to storage and transportation emissions: the pollution abatement system common stack; the dunnage furnace stack; the brine reduction area pollution abatement system baghouse stack; the heating, ventilation, and

cooling exhaust filter stack; and the two laboratory exhaust filter stacks. The exhaust gases for the deactivation furnace system, metal parts furnace, and liquid incinerator are discharged through the pollution abatement system common stack. Both this stack and the dunnage furnace stack are continuously monitored for CO, O_2, SO_x (a mixture of sulfur oxides), and NO_x (a mixture of nitrogen oxides) emissions. All six of the stacks are continuously monitored for agent concentration in the exhaust gases using both automatic continuous agent monitors (ACAMS) and depot area agent monitors (DAAMS). Additionally, there are twelve perimeter monitoring locations around Johnston Atoll and 102 sampling locations within JACADS that continuously monitor for agent concentration in the ambient air using DAAMS. The DAAMS samples are analyzed by laboratory techniques that can distinguish agent from other compounds that might activate an ACAMS alarm.

The ACAMS detects agent below concentrations that may present an immediate threat to plant personnel or the surrounding population. ACAMS response is limited, however, by a 2- to 10-minute sampling time. DAAMS collect longer, time-averaged samples for more sensitive subsequent analysis in the laboratory. In personnel areas, ACAMS are set to give a warning alarm at 20 percent of permissible exposure levels for workers (for 8-hour exposure) and an action alarm at 70 percent of the permissible levels. The DAAMS samples collected at the perimeter are analyzed to a much lower concentration level, corresponding to the levels permissible for general population exposure.

The ACAMS instruments at the agent monitoring stations perform an analysis approximately every five minutes for the exhaust and filter stacks. The JACADS HD projectile test campaign (OVT4), for example, resulted in approximately 347,900 ACAMS analysis cycles during 151 days of testing. Approximately 55 above allowable stack concentration ACAMS alarms occurred due to interference chemicals such as fuel contaminants. Following an in-depth investigation, these alarms were all determined to be false positive alarms, that is, not to have been caused by HD agent. Similar in-depth analysis of ACAMS alarms in OVT1, OVT2, and OVT3 indicated that, with one exception, no agent emissions were detected from any JACADS stacks. The monitoring stations were periodically challenged with calibrated test samples to assure their operability and sensitivity. All of the ACAMS instruments were challenged daily, except the pollution abatement system common stack ACAMS instruments, which were challenged every four hours.

The one occasion of confirmed agent emission occurred during OVT1 (December 8, 1990). The release occurred as a result of agent entering the liquid incinerator when the incinerator was in the cool-down mode, before it had been transferred to the mode in which exhaust gases are channeled through the charcoal filters of the building ventilation system. Total agent released was of no health or environmental concern, since the emission was

less than 0.22 of the allowable stack concentration for about an hour. However, from the point of view of plant control, the release showed a failure to properly control one of the operating processes of the plant (liquid incinerator cool-down). The release indicated deficiencies in the purge design of the liquid incinerator agent feed line, in standing operating procedures, and in operator's adherence to these procedures. Modifications, which will be discussed in Chapter 4, were made to prevent a reoccurrence of this type of failure in the Chemical Stockpile Disposal Program.

Virtually all of the JACADS building is ventilated with conditioned air. The air "cascades" from areas of low potential contamination to areas of higher potential contamination. It then passes through a series of charcoal filters designed to remove agent before discharge from the heating, ventilation, and cooling stack. In addition to agent monitors in the heating, ventilation, and cooling duct work, ACAMS and DAAMS monitors measure three points in each charcoal filter (after the first, second, and fourth of six sequential beds) on each of the seven main filtration units, while another ACAMS and another DAAMS monitor the combined effluent from the various filters to the ambient atmosphere.

Monitoring conditions on these filters are good, since the sampled air has been conditioned to lower the temperature and humidity, and interfering compounds (e.g., diesel exhaust) are relatively rare.

Even though there were no measurable agent emissions from the filters, their margin of effective operation is of interest. Agent level in the exhausted air can be very high from some of the rooms in the munitions demilitarization building where demilitarization activities take place. This is especially true for air exhausted from the explosives containment room, where the GB rockets are drained and sheared, and where the agent air concentration reached 50-100 mg/m^3 or higher. In the ventilation air collection system, these levels are typically reduced by dilution with air from other parts of the building before the air enters the charcoal filtration units. A detailed analysis showed that the first filter bed reduced agent concentration by about 400,000 times (well over the 10,000 times specified in the filter design). More important, no agent was detected beyond the second filter bed, indicating a large safety factor in the filter design.

In summary, the agent monitoring systems on the pollution abatement systems and common exhaust stack operated effectively to detect agent if it was present. Agent alarms occurred throughout testing; however, all but one were concluded to be false alarms. There was no detected emission of agent during normal operations, and there was only one confirmed emission incident. Because no agent was detected in the exhaust stacks during destruction operations, destruction removal efficiency in all cases exceeded the 99.99 percent efficiency required by RCRA. Destruction removal efficiencies in excess of 99.9999 percent were achieved during the liquid incinerator GB

and VX trial burns, as well as during the liquid incinerator mustard agent burn. For the metal parts furnace trial burn, the HD destruction removal efficiency could only be verified to be greater than 99.9996 percent; this was the highest level that could be calculated, because of the small amount of agent fed into the furnace, together with the monitor's lower limit (sensitivity) for agent detection in the flue gas (MITRE, 1993c, pp. C-1 to C-7).

Non-agent Emissions

Two distinct sets of regulations, and thus two separate sets of performance criteria, apply to JACADS air emissions. TSCA regulates incineration of polychlorinated biphenyls (PCBs). RCRA regulates the more typical products of combustion and establishes controls on the handling, storage, and disposal of hazardous materials.

TSCA is concerned with the emission of specific toxic materials, generally in trace quantities. These releases are not measurable on a continuous basis and require special instrumentation and laboratory work. Experience has shown that, if the waste feed is well characterized and controlled and the furnace operating conditions are well established, an occasional measurement, for example, once a year, of TSCA-regulated materials in the flue gas is an adequate indicator of the average emissions. Thus, TSCA is enforced by setting emission limits in the permit, then performing a test burn to identify the feed and operating conditions that meet the permit emission limits. These conditions are then applied as restrictions on the operation. TSCA regulations would be violated only if emissions exceeded TSCA—specified limits during a future test burn, of if operating conditions departed substantially from those of the test burn.

During JACADS OVT, only the deactivation furnace system underwent TSCA test burns because the system is fed rocket tubes that contain PCBs. The metal parts furnace, dunnage incinerator, and liquid incinerator are not covered by TSCA, because PCBs are not expected to be present.

During OVT2, in three out of four TSCA trial burns, the destruction removal efficiency for PCBs exceeded the 99.9999 percent TSCA requirement. In the fourth burn, destruction removal efficiency was calculated as 99.999896 percent. The eight continental U.S. plants are designed so that the deactivation furnace system afterburner provides double the residence time (2 seconds as compared with 1 second at JACADS), and operates at a higher temperature (2200°F as compared with 2000°F at JACADS). Hence, continental U.S. plants should be able to comply with TSCA's removal efficiency requirement for PCBs.

RCRA is concerned with the proper disposal of hazardous materials and, in the case of an incinerator, with the completeness of combustion and destruction. The RCRA permit sets detailed limits on operating conditions (e.g., temperature, residence time, oxygen levels), on emissions that can be monitored on a more or less continuous basis (e.g., CO) and that may contribute to general pollution or indicate incomplete combustion. RCRA test burns are required to demonstrate that the plant can operate within permitted conditions and to check the on-line monitoring equipment. RCRA noncompliances are detected directly by instruments measuring the RCRA parameters (both operation conditions and emissions) and are required to be reported to the EPA. Some RCRA parameters (e.g., gas residence time in the furnace) are not directly measured, but are controlled indirectly by furnace design and operation (e.g., furnace size and blower capacity).

Non-agent RCRA-regulated air emissions from JACADS were maintained within the permitted limits. These include particulate matter measured at less than 5 mg/m^3 (corrected to 7 percent O_2 as required by RCRA permit) versus a permitted emission limit of 180 mg/m^3, and HCl emissions of less than 0.05 lb/hr versus a permitted emission limit of 4 lb/hr. Concentrations of CO and O_2 in the flue gas also met all permit limits during normal operation. When concentrations of these gases were outside permitted levels, agent feed was stopped immediately and no agent was detected. Consequently, these events were considered in compliance with the permit.

Continental U.S. plants will require permits in accordance with the Clean Air Act. The high levels of NO_x emitted from the liquid incinerator (~500 ppm) and the deactivation furnace system (~200 ppm) when destroying VX may require additional gas treatment to remove nitric oxides. Two factors may increase NO_x at continental U.S. sites: first, there will be less dilution of stack gas by furnace room ventilation air; and second, there will be twice the residence time and a temperature 200°F higher in the liquid incinerator afterburner. In addition, when the deactivation furnace is being run simultaneously with the liquid incinerator, some NO_x will be generated by combustion of the energetics. However, the general effect of the deactivation furnace system might be to dilute the flue gas, thus lowering NO_x concentration.

Stack emissions were also analyzed for volatile and nonvolatile products of incomplete combustion and for dioxins and furans. The detected products of incomplete combustion, both volatile and semivolatile, were similar to those observed during the burning of fuel oil alone (Southern Research Institute, 1992). Total dioxin/furan levels were extremely low (0-0.16 ng/m^3), well below the U.S. standard for municipal waste incinerators (30 ng/m^3). The detected levels of all these trace organics were well below levels of regulatory concern (MITRE, 1993, pp. C-8 to C-11).

RCRA Noncompliance During Liquid Incinerator Destruction of HD

During the HD ton container test (OVT3), liquid incinerator operation failed to comply with the RCRA operating permit on five occasions. First, a RCRA-required feed-stop interlock with the liquid incinerator primary chamber low-temperature set point was not in place from the start of HD hazardous waste operations, on August 3, 1992, until August 10, 1992. Second, HD agent feed to the liquid incinerator was not stopped on August 9, either manually or by the missing interlock, when the temperature of the incinerator primary chamber dropped below the low-temperature limit specified by the RCRA permit. Third, on August 10, the oxygen concentration in the afterburner exhaust exceeded the allowable limit for 18 minutes while processing agent. Fourth, on August 17, hazardous waste feed to the liquid incinerator was not stopped after an alarm was received that the process data acquisition and recording system was no longer collecting data. About 38 minutes after loss of the system connection, the furnace was shut down by a stop-feed interlock. Some of the data that require continuous monitoring and recording in keeping with the RCRA permit were not saved. Fifth, brine from the pollution abatement system sump, which was considered hazardous waste, was dumped to the pollution abatement system secondary containment system on August 25, 1992. These incidents suggest that, unless more emphasis is placed on the importance of meeting RCRA requirements, administrative noncompliances will continue to occur. This is an not acceptable practice for continental U.S. sites.

Air Emissions—Brine Reduction Area

Brine (high concentrations of various salts in water) was produced as a by-product of the operation of the pollution abatement systems for the deactivation furnace system, metal parts furnace, and liquid incinerator. Testing has shown that this brine (and the dried salts derived from it) meets the RCRA definition of hazardous waste and thus must be disposed of appropriately. To avoid handling and shipping large amounts of water, the plant design included the brine reduction area, which removes water from the pollution abatement system brine to produce the dried salts. This was to be a two-stage process, with evaporation followed by feeding concentrated brine to a dryer.

A RCRA-required compliance test was conducted on the pollution abatement system for the brine reduction area from October 30 to November 7, 1991. During this test, entrained particulate emissions were less than 33 percent of the allowable limit of 30 mg/m^3, and HCl emissions were 3 percent of the allowable limit of 0.2 lb/hr. However, the pollution

abatement system was not operating properly during the test. The temperature of the gas stream into the system was below the dew point, which caused condensation of entrained moisture in the inlet duct. This moisture saturated salt particulates, and as a result they were deposited in the duct instead of entering the baghouse for collection.

The brine used during this compliance test was generated during the GB rocket test (OVT1) and was spiked with heavy metals to match maximum expected concentrations during future operations. Sample analysis of the spiked brine taken immediately prior to the tests indicated that metals concentrations were below the levels required for the compliance test. The test results were not submitted to the EPA in a timely manner. On April 10, 1992, the agency issued a cease-to-operate notice for the brine reduction area. The area was shut down on April 27, 1992, in accordance with this notice. The test results were submitted to the EPA on April 30, 1992. However, because the metals concentrations of the brine processed during the test were below specified levels and the pollution abatement system had not operated as designed, the test will have to be repeated.

A source emissions test was scheduled to be conducted during the HD projectile test (OVT4). Problems with the brine reduction area evaporator, evaporator heat exchanger, dryer drums, and accumulation of salt and moisture in the exhaust air ducts prevented regular operation of the area and the area's pollution abatement system. In a memorandum of agreement between the Environmental Protection Agency and the Program Manager for Chemical Demilitarization, the agency consented to a test being performed later in 1993, pending minor modifications to the system. This test has been performed and the results submitted to the EPA for its review and approval.

Dunnage Incineration

The dunnage furnace and its pollution abatement system consist of a feed-handling system, the furnace primary chamber, an afterburner, a quench tower, a baghouse separator, an induced-draft blower, and a separate exhaust stack. The furnace was designed to burn both uncontaminated and contaminated dunnage from the munitions-processing operations (e.g., rocket pallets, mortar shipping boxes), charcoal and filter media from the JACADS high-efficiency particulate air filters, used demilitarization protective ensemble suits, and demister-candle-filter media. The dunnage furnace was expected to be operational throughout the GB rocket test (OVT1), but it never achieved operational status. In the two months after this test, the furnace operated to destroy all dunnage from the GB test. The furnace RCRA trial burn was originally scheduled for the middle of June 1991, during the VX rocket test (OVT2). However, extension of the JACADS changeover/modification

shutdown period and shutdown of the furnace for repairs and modifications precluded conducting the trial burn through the end of the VX rocket test. To date, the environmental performance of the dunnage furnace has not been determined.

National Pollutant Discharge Elimination System Compliance

The Environmental Impact Statement developed as part of the permitting process for JACADS noted that the heated discharge water of the plant might adversely affect the biota in the area around Johnston Atoll, especially the green sea turtles that reside on the south side of the island adjacent to the JACADS facility. As a result of the statement, and pursuant to the Clean Water Act's National Pollutant Discharge Elimination System (NPDES), permit limits were placed on the flow and discharge temperature of the cooling water used by the plant and on the temperature rise permitted in the receiving water. In addition, recently promulgated regulations under the Clean Water Act resulted in Johnston Atoll being issued a general permit for stormwater discharges associated with industrial activity. This permit, which became effective on September 27, 1992, requires stormwater discharge monitoring and reporting.

During the HD projectile test (OVT4, conducted October 7, 1992, to March 6, 1993), JACADS operated in partial compliance with the NPDES permit. The noncontact cooling seawater discharge from JACADS averaged approximately 2.1 million gallons per day (mgd), which was below the daily allowable limit of 2.6 mgd and within the temperature limit specified in the permit. The system permit also limits to less than 1°C the temperature rise above the ambient temperature of the water into which the JACADS seawater stream is discharged. Strict compliance with this provision of the permit could not be determined, because necessary data are not available. Data were either not collected or have been lost for four of the five months during the HD projectile test. Since some of the data were lost from redundant data loggers, it could be determined from other data collected that there was no detrimental impact to the environment during those periods. The most bothersome aspect of this problem was that it occurred late in OVT operations. During the HD projectile test when the temperature data were available, on four days the temperature rise exceeded the 1°C limit. This temperature increase was attributed by the Program Manager for Chemical Demilitarization to natural solar heating of the receiving water and not to JACADS operations, as determined by a representative of the Fish and Wildlife Service.

Hazardous Waste Handling and RCRA Requirements

So far as is known, there were no occasions when hazardous materials of any type were released or disposed of without proper controls, except in the case of minor spills and similar events, for which the MITRE reports indicate that proper response, control, and reporting were observed. However, there have been numerous administrative noncompliances of RCRA procedural requirements concerning tracking, accumulation and storage, and waste minimization. These noncompliances decreased as the Army gained experience with the RCRA requirements over the four OVT tests.

In OVT1, there were no spills or known discharges of hazardous materials. However, there were recurring problems with the tracking of materials, housekeeping, proper inventory, and related activities. In addition to improper recordkeeping, substantial numbers of drums and other materials were stored for longer than the 90-day period permitted under RCRA. Some were stored in facilities or areas not meeting RCRA requirements.

The demilitarization protective ensemble suits used for agent-related maintenance were often contaminated with agent and received preliminary decontamination. Both uncontaminated and contaminated suits were stored for over six months in anticipation of disposal in the dunnage furnace, though only the latter are potentially subject to RCRA regulation. This was an apparent violation of storage requirements. When the Army decision was made to not burn the suits in the dunnage furnace, their storage became more clearly subject to the 90-day RCRA limit on storage. The suits were bagged and physically stored under control, but the storage containers and labeling, as well as storage duration were not in compliance with RCRA regulations.

As an indication of improvement in this area, approximately 565,921 pounds of hazardous waste were shipped from Johnston Island during the HD projectile test (OVT4). This waste resulted in 23 hazardous waste shipments (individual manifests), representing 1,423 containers. All wastes were properly characterized, and no shipping problems were encountered. On one occasion hazardous wastes were stored longer than the regulatory limit in the munitions demilitarization building and the satellite accumulation areas.

From the end of the HD ton container test (OVT3) to the end of the HD projectile test (OVT4), over 4.5 million pounds of hazardous waste were handled in compliance with RCRA regulations. This material included 105-mm projectiles,[2] spent decontamination fluid, scrubber brine, dried salts,

---

[2] At present, scrap metal waste from projectile demilitarization operations (which has been fully decontaminated, i.e., to the "5X level") is disposed of in a landfill, since no scrap metal recycling program is in place. However, the Army is pursuing options to recycle the material either through the government operated Defense Reutilization and Marketing Office or independent scrap metal dealers.

incinerator ash, demister-candle-filter media, furnace residue, and various nonprocess wastes. On October 19, 1992, approximately 20 gallons of hazardous brine spilled onto the coral from the pollution abatement system of the brine reduction area inlet duct. The spilled brine and contaminated coral were immediately cleaned up, and the spilled brine and approximately 1,000 pounds of coral were removed, drummed, and shipped to a hazardous waste landfill for disposal. The area was sampled to confirm that no contaminated material remained.

After the metal parts furnace trial burn, the Army was informed by the EPA that their brine management practices were not in compliance with applicable regulations. The noncompliant procedures related to the chlorine and sulfur in the mustard agent, which produce large amounts of acid gas when incinerated. The high processing rate of agent in the liquid incinerator generated a large quantity of acid gas, requiring large quantities of brines to remove the acid. The large quantity of brine generated and the fact that the brine reduction area was not operational between April 27 and August 23, 1992, resulted in an abundance of brine. The brine was stored in two 26,000-gallon brine reduction area surge tanks and fifteen 5,000-gallon portable stainless steel tanks. On three occasions, the pollution abatement system sump overflowed and the main system's secondary containment was used to contain brines for longer than 24 hours. The JACADS brine management procedures were revised and are now in compliance with EPA regulations.

The JACADS RCRA Part B permit states that the hazardous waste handling area of the brine reduction area baghouse will be located outdoors and within a dike area that has a floor drain and sump for the collection of spilled hazardous waste. The RCRA permit also states that collected waste and precipitation will be pumped to the building sump of the brine reduction area drum-dryer whenever necessary to prevent runoff from the area. As noted in the brine reduction area logbook, on August 28, 1992 the liquid (pH 9.4) in the baghouse secondary containment area was pumped to the ground in violation of permits.

During OVT2, approximately 17 pounds of residue from the heated discharge conveyor of the deactivation furnace system—hazardous waste containing lead and cadmium—was released to the environment. This material was released while filters from the dust collection system of the residue handling area filter system were being cleaned. The maintenance procedure incorrectly specified that the filters be cleaned by blowing them out with high-pressure air. The procedure did not require the dust to be collected, and dust from two of the eight filters was discharged to the environment. The maintenance procedure subsequently was revised to require the collection of all dust removed from these filters.

The residue handling area was identified as a continual source of fugitive emissions and was the source of three releases of heated discharge conveyor

residue, estimated between 1 and 3 pounds each. These releases were reported to the EPA in the annual noncompliance report rather than immediately because they were based on engineering estimates. Immediate reporting of the releases under the JACADS RCRA permit was not required. Modifications were made to the residue handling area to reduce the amount of fugitive emissions to acceptable levels.

RCRA also requires that waste minimization be a part of the waste-handling program. All persons who ship hazardous waste on a manifest must sign a "Generator Certification," which states that a program is in place to reduce the volume or quantity and toxicity of such waste to the degree determined by the generator to be economically practicable. It also states that the proposed method of treatment, storage, or disposal is practicable and minimizes the present and future threat to human health and the environment. Although the JACADS standing operating procedures contain a very positive waste minimization statement, there was no active program in this area during OVT. The waste minimization effort at JACADS has not resulted in a quantifiable waste reduction. There are plans to modify operations in the brine reduction area, so that a reduction in brine will result in a much smaller volume of dried salts for disposal.

Compliance with Administrative Requirements

The various permits regulating JACADS air emissions incorporate literally hundreds of pages of requirements on air emission limits, furnace operating conditions, inspections, reporting, and data collection and retention. Violations of operating or emission limits may be termed "substantive," and violations of data collection and reporting requirements may be termed "procedural" violations.

The TSCA permit does not establish significant requirements for data collection, retention, and reporting, since the TSCA program is carried out primarily through test burns and subsequent adherence to the demonstrated operating limits. There have been no known problems at JACADS in meeting the procedural requirements of the TSCA permit.

The RCRA permit, on the other hand, includes very detailed requirements for data collection, retention, and reporting. For example, RCRA requirements specify the list of pollutants to be monitored (e.g., agent, CO), the frequency of the measurement (e.g., continuous versus once per hour), and the measurement protocol to be followed. During the OVT, O_2 and CO were measured by continuous emission monitors and the results were recorded on paper strip chart recorders. In addition, the data were fed into the process control system for display in the control room and for use in continuous monitoring to determine whether the emissions were within permit

limits. Some data were also sent to the plant data acquisition and recording system (PDARS) for data record retention.

The RCRA permit also includes limits on many furnace operating parameters, such as furnace temperature, oxygen levels, flows, and pressures. Again, method and frequency of measurement are often specified, with most data measurement and recording being required on a continuous basis or once per minute. Since the quantity of data during the tests was too great for manual data logging, the operations and maintenance contractor relied on the process control computer and PDARS for recording and displaying measured values and for documenting any alarms on these parameters.

Five weeks into OVT1, it was discovered that RCRA permit requirements for recording data on furnace operating parameters were not being met, which put the plant into procedural violation of the permit (emission values which were recorded on paper strip charts, showed that the permit's substantive technical requirements were satisfied). Specifically, although the measurements were taken at four-second intervals by the control computer and compared with required limits for alarm checking purposes, the data were not being recorded on a routine basis (except for five-minute samples being collected by the MITRE Corporation). This noncompliance had been present since the introduction of hazardous materials into the deactivation furnace system on January 18, 1990, when rockets without agent were first incinerated. Given the extent of procedural violation, the Army notified the EPA and shut the plant down for eleven days until programs could be developed for capturing the data necessary to satisfy the permit. Once this had been done, the plant was restarted.

During the evaluation of this problem, it was also discovered that certain preventative maintenance and inspections required under the RCRA permit were not being performed by the operations and maintenance contractor. The permit requires, for example, that a furnace be directly and visually inspected before each day's operation. This was not feasible since the high furnace room temperatures limited personnel entry. After discussion with the EPA, the operations and maintenance contractor instituted a variety of inspections and other actions and expanded its use of video monitors to comply with the permit requirements.

As a result of these experiences, the contractor began a detailed review of the RCRA permit, which showed over one hundred ambiguities, errors, omissions, and other problems in the permit itself and in the compliance of the operations and maintenance contractor and the Army with its requirements. Actions to correct the various deficiencies continued through the remainder of the testing but were incomplete at the end of the OVT1 test.

During OVT2, most of the administrative requirements associated with environmental compliance were met. However, several administrative permit requirements were not followed, the hazardous waste management program

was not effective in properly characterizing and disposing of all process waste, and changes to the JACADS facility were not properly reported to the EPA. The RCRA permit for JACADS is a complex document containing numerous inconsistencies and deficiencies that make compliance difficult. The permit was reviewed to identify inconsistencies within the permit document itself. The resulting list noted 48 major inconsistencies that required correction in the next revision of the permit. However, even by the end of OVT4, the JACADS personnel were unable to comply fully with certain provisions of the RCRA permit, including data recording and retention, equipment inspections, and process waste handling.[3]

There are two areas of administrative compliance that remain a concern: timely notification of the EPA when there are modifications to the JACADS facility, and the generation of large quantities of hazardous waste because of the lack of a waste minimization program.

The Program Manager for Chemical Demilitarization is required to notify the EPA of changes to JACADS that meet the definition of a permit modification. The Code of Federal Regulations (CFR), Title 40, Subsection 270.2, "Permit Modification at the Request of the Permittee," defines three modification classes. Class 1 changes are "minor changes" that do not require EPA notification before implementation. Class 2 modifications apply to variations in the types and quantities of waste managed, technological advancements, and changes necessary to comply with new regulations "without substantially changing design specifications or management practices in the permit." Class 3 modifications "substantially alter the facility or its operation." Class 2 and 3 modifications require a series of public notifications and EPA review and approval before implementation.

Throughout the OVT period, modifications were made to the JACADS facility to correct problems that were discovered during testing and to enable JACADS to complete its mission. The Program Manager for Chemical Demilitarization submitted four Class 2 modification requests. Three of the Class 2 modifications requested changes to JACADS operating conditions or waste feeds to one of the furnaces. The Program Manager was required to request temporary authorization to operate JACADS in accordance with RCRA regulations under 40 CFR 270. The fourth Class 2 modification requested changes to the dunnage furnace trial burn plan and was approved following normal procedures.

---

[3] This is explained in part in MITRE's summary evaluation report: "This process of mapping permit requirements with actual operations, as well as the results of environmental audits identified permit conditions (such as inspection requirements) that could not be met because either the system design or the equipment in use differed from what was assumed in the permit."

JACADS has limited permitted storage space for hazardous waste. Therefore, most wastes are stored according to the generator standards (90-day limit). Approximately 1,434 drums of waste were handled according to these regulations during the HD projectile test. On only one occasion were drums stored longer than the allowable 90 days for which an extension was granted by the EPA. This instance occurred because the intermodal shipping container that held the drums was damaged and declared unacceptable for transport due to weakening of the structure. The drums were shipped on the next barge after a total of 103 days in storage.

Contaminated demilitarization protective ensemble suits and rubber gear were stored within the satellite accumulation area in the munitions demilitarization building for up to three months. According to the regulations, the material may be stored near the point of accumulation until as much as 55 gallons have accumulated, then the material must be moved within three days to either a permitted storage area or a 90-day storage area. The rapid accumulation of the suits and contaminated rubber gear within the munitions demilitarization building resulted in a large effort to containerize the material and remove it from the building. In an attempt to expedite the cleanup, the material was not tested for contamination level, but was containerized and treated as hazardous waste. This noncompliance occurred throughout the HD projectile test until most of the accumulated material was removed in late January 1993. Contaminated material was removed from the munitions processing bay and drummed for storage several times each week during February and March 1993.

Administrative noncompliance is a serious issue. Continuation of this noncompliance record at continental U.S. sites will seriously reduce public confidence and threaten successful implementation of the Chemical Stockpile Destruction Program.

4

Excursions and Upsets During OVT: Implications for Improvements at Continental U.S. Sites

The excursions and upsets (i.e., deviations from normal design operations) that were experienced during the JACADS OVT campaigns are reviewed in this chapter to assess their implications and to identify measures that might improve operational safety at continental U.S. sites.

The experience during OVT1 through OVT4 at JACADS generally demonstrates a good safety record. These tests, as reviewed in the five OVT reports prepared by MITRE, show that the baseline system destroyed agents and munitions during OVT without any detectable impact on public safety, if at a slower rate than planned. The mechanical elements of the baseline system are complicated, and the aging agents and munitions are not in uniform condition, so the occurrence of mechanical and operational problems during testing of prototype systems is not surprising. Further, the tropical and marine environment of the JACADS site, its isolation, the single- or double-shift operating mode (daily startup and shutdown), and the limited electric power supply grid all contributed to more problems and downtime than might be expected at a continental U.S. site.

This chapter analyzes the excursions and upsets that occurred during OVT from a different perspective. The philosophy of *system design-in-depth* was used for JACADS—with multiple layers of safety protection to prevent agent release if parts of the system should fail. Because of this design-in-depth philosophy, accidents can only occur if there are sequences of multiple mechanical or human failures. MITRE identified only four potential agent-related incidents during OVT in its summary report. One resulted in agent release. However, there were other incidents that required detailed investigations, and many incidents resulted in downtime. The history of such upsets reflects the types of failures that actually occurred and provides additional insight on system performance and on areas needing improvement for continental U.S. operations. Many of the problems that occurred during OVT resulted in improvements in equipment and operations at JACADS that have been incorporated in the program for Tooele and other continental U.S. sites. These improvements, and others since identified, are discussed in the sections that follow.

TRANSPORTING AND UNLOADING AGENT AND MUNITIONS

Munitions are packed and stored in mounded, reinforced enclosures, or "igloos," which are monitored for any leakage before entry. If contamination is found, special procedures are followed to containerize leaking munitions and to decontaminate the igloo. If there is no sign of leakage, rockets are loaded into the single pallet only rocket transport (SPORT)—a transporter that holds the munitions under vacuum—and taken to the munitions demilitarization building where they are unloaded and stacked for processing.

There were few problems during the transport and unloading operations. The main cause of downtime initially was failure of batteries that power the SPORT vacuum pump. Operators are now allowed to replace batteries during operations, reducing this failure mode considerably. Some downtime was also due to unfavorable weather conditions which hindered munitions transport.

During OVT1, unpack area operations were often disrupted by alarms from an ACAMS in a nearby ventilation duct carrying agent-contaminated air from other parts of the plant (e.g., the disassembly area). This alarm sounded like the alarm for the general working area, and workers prudently stopped operations. The ACAMS on the ventilation duct was removed from the audible alarm system, although it continued to be monitored. Subsequent unpack area operations proceeded smoothly.

Ton containers and projectiles were transported without secondary containment to the bulk drain station without any significant incidents.

These transportation and unloading operations, under supervision of the Army, appeared to be performed reliably and well. For continental U.S. sites, a robust, vapor-tight, transport container that will withstand impacts and fire exposures has been designed to transport all munitions and ton containers. (A transport container for spray tanks still needs to be developed.)

DISASSEMBLY AND DRAINING

M55 rockets are moved into the explosives containment room, which is maintained below atmospheric pressure and designed to withstand explosive overpressures. Ventilation air from the room is passed through multiple charcoal filter beds before release to the atmosphere. Inside the room, the rockets are fed to the rocket shear machine, which punches two drain holes and one vent hole into each munition. The agent is drained before the machine shears the fuse and cuts the rocket into sections. The disassembly criterion for agent removal is that there be no more than 5 percent residual agent after draining. The agent goes to a storage tank and the rocket parts to the deactivation furnace system.

During OVT1, the rocket shear machine operated with 93.7 percent availability. There were some minor problems associated with the hydraulic system and the pusher arms. In one instance, an M55 rocket was advanced beyond the punch and drain position without being punched and drained. Since there was no automatic method to return the rocket for punching and draining, it was decided to process the rocket through the deactivation furnace system with a full load of agent rather than to intervene manually. This mode of operation violates the basic design philosophy of treating agent and energetics in separate processes. There is a need for a measure to assure that the disassembly criterion has been met. The committee recommends action on this matter, though not a specific solution.

During OVT2, there were reliability problems associated with the fuse segregator conveyor, a component of the rocket shearing machine, which was designed to separate the fuses from other rocket pieces (burster and rocket propellant) to eliminate potentially explosive combinations of materials being fed into the deactivation furnace. In this operation, a segregator gate is used to collect fuses, that have been sheared from their rocket assemblies, in a buffer area for separate incineration. This conveyor was responsible for nearly 40 percent of the downtime associated with the rocket handling system. Long term exposure to caustic decontamination solution, accumulation of rocket debris in the conveyor housing, and continuing alignment problems resulting from a design deficiency, led to the removal of the conveyor from the operating process early in the OVT2 campaign. This conveyor was eliminated by selectively controlling the timing of the discharge gates to separately dump all of the pieces of the cut rocket (fuse, burster, and propellant) into the deactivation furnace. This works well with a single rocket shear machine operating. Further work on logistics is needed to prove the system for parallel rocket shear machine operations, particularly with respect to possible errors during manual override operations.

Ton containers are moved to the bulk drain station where they are placed on a load cell and punched. A drain tube is inserted through the hole, and the liquid is pumped out to an agent storage tank. This system seems to work well, except there were some draining problems with ton containers that held degraded HD. The main concern is to assure that 95 percent of the stored agent is removed so that ton containers holding more than the design maximum amount of 5 percent residual agent are not fed to the metal parts furnace. It was assumed in the design that the tare weights of the containers would be known beforehand so that load cells could measure agent removal. However, the tare weights were not known and workers with demilitarization protective ensemble suits had to be present in the munitions processing bay to manually insert a wooden dowel (dipstick) into the containers during OVT3. Use of operators on a routine basis in this area is not acceptable, and

an alternative means of determining agent content in the tanks should be developed.

105-mm M60 projectiles were moved into the explosives containment room and fed to the projectile/mortar disassembly machine, where the fuse and burster explosive components were removed and fed to the deactivation furnace system. The remainder of the munition is conveyed to the munitions processing bay where the burster well is extracted and the agent drained from the munition using the multipurpose demilitarization machine. The drained munitions are then conveyed to the metal parts furnace for decontamination. The projectile/mortar disassembly machine operated fairly well, with about 65 percent availability, but it needed adjustments to compensate for differences between batches of projectiles.

Two events were of concern. First, a problem in removing the burster from a projectile led an operator to shift to manual mode and incorrectly allowed the projectile to move forward with its burster intact. The downstream burster-detector probe was missing, so the projectile again was allowed to proceed. The incident had no serious consequences but is indicative of a significant operational problem. The probe apparently had been removed because it had earlier been the source of a number of false alarms. Removal of a critical safety system is a serious operational problem, particularly with no documentation or safety review. After analysis of this incident, the probe was replaced, an additional software interlock was added, and operator training was intensified.

In the second incident, a fire started in the explosives containment room. The investigation found that the fire was due to ignition (probably from static discharge owing to a jammed booster cup) of residual booster fuse material that accumulated on a conveyor belt. Under normal operations, the residue is small, but a series of projectiles with a slightly different booster cup design spilled larger quantities of explosive tetryl powder, which was allowed to accumulate on the conveyor. All systems functioned to contain the fire, but smoke from the fire obscured monitoring cameras so that conditions inside the room were unobservable for some time. After analysis of the incident, a water deluge system, activated automatically by heat or radiation, was added to quench such fires. Improvements in the systems to minimize the amounts of tetryl powder spill were also added. At Tooele, a similar water deluge system will be installed and operators will be trained to adjust the punch machine to avoid excessive explosive spills.

The multipurpose demilitarization machine is located in the munitions processing bay. It receives munitions with the explosives removed, pulls the burster well, and drains agent. This machine had a number of operating difficulties that slowed its production rate. Some were associated with degraded mustard agent, which caused problems with the drain pumping system and created a pressurized foam.

There were two other problems with this machine that have significant safety implications. Because of difficulties in accessing and draining agent and remotely verifying drainage of munitions with partially gelled HD in the multipurpose demilitarization machine, personnel in protective gear were stationed continuously in the munitions processing bay during operations. This was necessary to avoid time delays in responding to each process disruption. Several minor, non-agent related worker injuries occurred. This use of operators is counter to the fundamental philosophy of automated operation and exposes workers to additional risk. This is not a desirable operating mode for continental U.S. sites.

The second concern was with inadequate software and the ability of operators to disable and reactivate interlocks when switching between manual and automatic operation. On eight occasions when the multipurpose demilitarization machine was in manual mode, projectiles with the burster wells in place and agent undrained were sent to the metal parts furnace, where vaporization of agent caused ejection of the burster well and subsequent minor damage to the furnace refractory. Although the consequences at JACADS only involved downtime, this is also an unsafe operating mode that requires correction for continental U.S. sites.

AGENT DESTRUCTION

The toxic cubicle contains the agent quantification system, which measures the volume and weight of drained agent entering the system, two 1,230-gallon agent storage tanks, and three 2,300-gallon tanks for spent decontamination solution. The liquid incinerator consists of two sequential combustion chambers and a pollution abatement system. A single air blower system supplies air to both combustion chambers at JACADS; at Tooele, each chamber will have its own air supply blower. The first combustion chamber is preheated to operating temperatures with fuel before agent is injected. As agent flow is increased, fuel flow is decreased to maintain the right temperature for agent destruction. The gases from the first chamber are then sent to the secondary chamber (also preheated with fuel) for a final burn stage. Some salts from agent destruction deposit in the secondary chamber, especially during nerve agent destruction. Spent decontamination solution is also injected into the secondary chamber for destruction of any residual agent in the solution. This solution contains salts which also deposit in the bottom of the liquid incinerator in the form of slag. The automatic salt removal system at JACADS was not designed for slag. Periodic shutdown of the incinerator for manual removal of glasslike solidified slag was necessary. Manual slag removal greatly reduced the expected availability of the incinerator, as did some problems with spare part availability. Better slag

removal methods or other means of treating decontamination solution need to be developed for continental U.S. sites. A hot-tap slag withdrawal system has been designed for installation at Tooele. This system will allow drainage of molten slag to a pit area alongside the furnace during operation. It will require verification testing prior to introducing agent at Tooele.

One concern with toxic cubicle operations during OVT was the occasional use of agent tanks at levels above the high-liquid-level alarm point (e.g., to accommodate trial burns). This is not good safety practice. The toxic cubicle tank at Tooele will only have a 500-gallon capacity and may present an operational bottleneck if liquid incinerator availability is inadequate. A larger emergency dump storage tank is provided at Tooele but should not be used for normal operations.

During OVT1, a small agent release of 22 percent of the allowable stack concentration occurred from the liquid incinerator for about an hour when the system was being shut down for salt removal. The combustion-air-blower had been stopped, but the operators did not switch the ventilation to the charcoal adsorption system even after the combustion-air-blower ACAMS alarm. The stack ACAMS alarm did not sound because of a contaminated sample line. The operators reacted to the blower ACAMS alarm by requesting a confirmation DAAMS sample analysis. The operators did not stop the liquid incinerator combustion-air-blower or divert the room air to the furnace room filters because the pollution abatement system common stack ACAMS, which is located downstream from the liquid incinerator blower duct ACAMS, had not sounded. This was an incorrect action by the operators. The operator error was the result of inadequate training and an improper response to standing operating procedures. Only after an hour, when the DAAMS sample detected agent (at 8 percent of allowable stack concentration limits), did the operators switch the ventilation air to the filter system. As a result of this problem, modifications were made to shutdown procedures, including removal of the agent feed gun before shutting down the secondary chamber. At Tooele, the ventilation air always passes through a charcoal filter, thus avoiding the potential for sending agent-contaminated air to the stack.

Also in OVT1, the refractory lining in the secondary combustion chamber deteriorated much faster than anticipated. A new refractory material that has demonstrated improved performance was installed before the subsequent tests. Some of the refractory material was again replaced during OVT4 indicating the potential for ongoing maintenance improvements in this area.

The liquid incinerator had problems when operating at design rate because the flame scanner erroneously sensed unstable combustion and shut off the agent feed. This problem was temporarily solved by reducing agent feed rates, which is not a rate-limiting factor for rocket and projectile processing. Later, the flame scanner was adjusted to correct this problem. In

OVT3, when large quantities of HD from ton containers were destroyed, the incinerator was only 50.8 percent available and had an average operating time between failures of only 3.1 hours. Frequent shutdown of the liquid incinerator is not desirable and modifications to the control system or a reduction in feed rates appears desirable for continental U.S. sites. Some shutdowns during OVT3, which was a short test, were made to conduct a RCRA trial burn.

Two other problems occurred during OVT3. In one event, the liquid incinerator was shut down during a metal parts furnace test, agent feed was stopped, and combustion air was stopped to keep the liquid incinerator hot and minimize restart time. Unfortunately, the liquid incinerator room ventilation system was shut down due to a damper malfunction, and the room overheated enough to melt and burn insulation on some instrumentation. Damaged instrumentation had to be replaced.

In another event at the start of OVT3, a new agent-feed meter to the liquid incinerator was improperly calibrated because a calibration component had been missing. When this was fixed, the system was run for four days before it was found from tank-level comparisons that the meter recording agent cumulative flow to the liquid incinerator was also miscalibrated. Both instruments should have been calibrated and verified prior to system operation.

Liquid incinerator operational availability will be even more critical at Tooele with smaller agent-feed storage capacity. With two operational liquid incinerators, availability should be improved.

ENERGETICS DESTRUCTION

The deactivation furnace system consists of a feed chute and a fuel-fired rotary kiln that incinerates energetics and residual agent while thermally decontaminating the metal residues. The metal residues are further treated in an electrically heated discharge conveyor. The flue gas is treated in an afterburner and pollution abatement system before release to the atmosphere. The deactivation furnace is designed to contain explosions and is fitted with blast attenuators and discharge gates for blast containment. The feed to this system is nonuniform, consisting of munitions fragments and energetics, with residues of agent and agent by-products.

The deactivation furnace system was only 56 percent available during OVT1, due to a number of operational problems, and it was the main source of downtime. One of the problems was molten aluminum and fiberglass slag dropping through the discharge conveyor belt, collecting on the underside of the belt, and damaging the drive and the heating elements. This conveyor system was redesigned before OVT2 and subsequently operated well, except

for overheating of the discharge heater due to high furnace-room temperature. Better temperature control is provided at Tooele. Another problem was warping and sticking of the discharge gates. The design modification involved installing an explosion-proof enclosure around the deactivation furnace system discharge gates so that the furnace could be operated with the gates open (during OVT).

The kiln bolts also experienced failures due to flexing and thermal stresses. These bolts were also redesigned at the end of OVT1. Cracks were found in the feed chute to the deactivation furnace system; they could result in agent leakage to the furnace room. The feed chute was also redesigned. During OVT1, a rocket was fed to the system without being punched and drained before being sheared. It was processed without showing any concentration excursions within the detection limits of the monitoring system.

During OVT2, the deactivation furnace system was again the major source of system downtime. A detonation of rocket burster pieces in the system put a 2-inch x 8-inch hole in the kiln wall. The containment around the system held, but the incident resulted in major downtime for investigation, repairs, and inspection. For continental U.S. installations, the kiln has a 2-inch wall design which is intended to withstand such a detonation. Feed system changes should improve the distribution of burster pieces and also reduce the likelihood of explosions.

Additional problems involved pieces of munitions getting stuck in the feed chute; a vibrator was added to help dislodge stuck pieces. The feed system has been redesigned at Tooele. Also, the kiln thrust bearings were damaged by overheating and required repair. Finally, operations were disrupted while the fuse segregator conveyor system (discussed in the section on disassembly and draining) was being replaced by a new system to segregate the rocket sections during processing.

An improved deactivation furnace system was used in OVT4, where it operated with a 74 percent availability. There were a few additional operational problems that led to some further, minor system improvements.

METAL PARTS DECONTAMINATION

The metal parts furnace decontaminates trays of agent-drained munitions (without explosives) and drained ton containers. These materials are conveyed into the primary combustion chamber of the furnace, where they are subjected to temperatures well above 1000°F for at least 15 minutes, to drive off any residual contaminants and produce fully decontaminated scrap metal.

The furnace design uses a counterflow system to ensure equipment decontamination, including heatup and maintenance of temperatures at above 1000°F for 15 minutes. If small quantities of agent residual are present, they

will be evaporated in the first part of the furnace and fully burned prior to the flow of the combustion gases to the exit. However, the presence of more agent than allowed by the design capacities of the furnace might result in some unburned vaporized agent exiting the furnace. Combustion gases then flow to an afterburner system that destroys any agent that may escape the primary furnace, and finally to a pollution abatement system, before release to the atmosphere. The maximum amount of residual agent that can be safely processed in the metal parts furnace has not yet been determined.

The metal parts furnace was used in OVT3 and OVT4 with very few problems. On eight occasions during OVT4, undrained projectiles were fed to the furnace, in each case creating a pressure surge that was above the negative pressure for normal primary combustion chamber operations. This resulted in "puffs" (pockets of gases) of agent in the furnace. Further, unremoved burster wells were forcibly ejected from the projectiles. There was some resulting internal damage to the furnace refractory, but no adverse environmental or safety impacts were detected from these incidents. This problem is not a metal parts furnace defect, but a problem in passing undrained projectiles into it. The metal parts furnace operated with 92 percent availability during OVT4.

The present JACADS RCRA permit limits metal parts furnace throughput to a 5 percent residual of the agent content of the projectile or ton container, regardless of the actual capacity of the furnace. It would be more appropriate to base the permit on the actual capacity of the furnace rather than to rely on waivers to process items that cannot be drained to an arbitrary level. The metal parts furnace should be designed and permitted for treating maximum anticipated quantities of residual or gelled agent.

AUXILIARY SYSTEMS

The dunnage furnace and its associated pollution abatement system are intended to burn both contaminated and uncontaminated dunnage (e.g., rocket pallets, shipping boxes, filter media, used demilitarization protective ensemble suits, laboratory wastes). This furnace was only used in a startup and test mode during OVT1, when it appeared that its capacity was well below the design rate. After OVT1, the dunnage furnace was modified and successfully burned all the dunnage from OVT1. After 37 days of operation, it was damaged by a pressure excursion (of unknown cause) during testing. It was not used during subsequent testing, and dunnage was instead disposed of as solid hazardous waste. The pollution abatement system of the dunnage furnace at JACADS does not include an acid gas scrubber. Additional dunnage furnace tests at JACADS are needed to show whether acceptable acid gas emissions can be achieved with the existing system.

The brine reduction area treats brines generated by pollution abatement systems associated with operations. These brines contain salts from the neutralization of acid stack gases, but also may contain heavy metals and particulates. The brine reduction area is designed to vaporize the water in the brine and produce dehydrated salts that can be packed in plastic-lined 55-gallon drums for hazardous waste disposal. During OVT1, excessive particulates were emitted with the water vapor and a heated baghouse was designed for addition to the system. The brine reduction area was used for only 33 days during OVT2. During OVT3, it ran at 87 percent availability but only operated during the last two weeks. During OVT4, it operated at 42 percent availability. High tank liquid levels were experienced with the brine storage tanks, and an overfill spill occurred on one occasion. As a result, the compliance test for the pollution abatement system of the brine reduction area was not completed. (This test was completed following the end of OVT, and the results were submitted to the U.S. Environmental Protection Agency.)

The main power supply to the facilities is generated on Johnston Island and is less reliable than typical electrical utility power services in the continental United States. Critical systems for shutdown and maintenance of the facility in a safe condition after a power failure are supplied through an emergency generator and battery-powered uninterruptible power supply units. During OVT1, the emergency generator failed to start on one of four occasions due to control problems, which have since been addressed. Further, load control problems with this generator were experienced and corrected during OVT4. The uninterruptible power supply units required frequent maintenance because of overheating and lack of ventilation in their equipment area. On one occasion, a worker checking the supply inadvertently disabled the entire electrical system at JACADS. With more reliable power supply at continental U.S. sites, good, uninterruptible ventilation of the power supply area, and improved emergency generator controls, emergency power supply is not expected to be a problem.

AGENT MONITORING

Two general types of agent monitoring are required, the monitoring of the process for control purposes, and the monitoring of air and waste products for the presence of residual undestroyed agent.

Monitoring for process control usually involves real-time monitoring, nominally defined as a period consistent with the time needed to make a corrective change without a downstream problem developing. The baseline incineration furnaces are monitored by various types of process instruments that can perform essentially real-time monitoring and allow real-time process control. However, the monitoring for residual agent takes several minutes and

is not performed in real time relative to the short residence times in the combustion furnaces.

Residual agent is presently monitored by two systems: (1) 2- to 10-minute response analyzers, the ACAMS, which monitor for agent in personnel areas and in the stacks, and are set to trigger automatic shutdown at 20 percent of permissible agent levels, and (2) the DAAMS, for collection of longer, time-averaged samples for subsequent laboratory analysis.

Thus, the ACAMS monitors sound alarms in the event of agent release to trigger corrective actions, such as stopping the processing of agent until the nature of the problem is determined. The DAAMS system serves the dual purpose of providing samples that are used to confirm ACAMS monitoring and to document the concentrations of agent too low to be detected with the ACAMS.

Both systems use flame photometric gas chromatography to detect the presence of specific compounds (i.e., phosphorus to detect GB and VX, and sulfur to detect HD). The limit of detection is determined by the quantity of agent collected on the adsorption column for analysis during each cycle. The DAAMS monitors can detect lower long-term concentrations of agent because they collect a larger volume during their sample collection cycles (typically 1 to 24 hours). The ACAMS instruments can detect higher concentrations of agent that are present for short time periods, because of their shorter sample collection time (typically 2 to 10 minutes).

Unfortunately these instruments must be readjusted for each agent, and the ACAMS does not adequately differentiate agent from other commonly encountered organic contaminants with similar retention times (e.g., fuel contaminants, antifreeze, etc.), which results in frequent false alarms. False alarms also occurred frequently due to electronic noise, operator errors, and products of incomplete combustion. All these types of false alarms can be reduced. Further, when an ACAMS alarm sounds, the retrieval and laboratory analysis of the DAAMS collection tubes for confirmation typically take 15-20 minutes.

As a result of a review of JACADS monitoring systems, the Stockpile Committee has issued a special report on monitoring (NRC, 1994b), which addresses the key issues of timely and reliable on-line detection of agents.

WORKER SAFETY

Another indication of safety performance is worker safety history. Low industrial accident rates typically indicate general safety consciousness, good housekeeping, and conformance to established safety procedures over an extended period of time. However, housekeeping was a major deficiency

during OVT safety inspections. Worker safety experience during the relatively short OVT period is shown in Table 4-1.

TABLE 4-1 Summary of Occupational Lost Time and Recordable Injuries (per 200,000 employee work hours)

Test Period	Cases with Days Away Injury Rate (actual)	Cases with Days Away Injury Rate (goal)	Recordable Injury Rate (actual)
OVT1 (GB rockets)	1.2	4.1	5.8
OVT1 (shutdown[a])	1.0		4.4
OVT2 (VX rockets)	2.9	3.3	5.7
OVT3 (HD ton containers)	0.0		2.4
OVT4 (HD projectiles)	0.4	2.1	7.7

[a] Data for other shutdowns was not available.

SOURCE: MITRE, 1993b.

The Army decided that the measure of worker safety to be used was the "cases with days away" or lost workdays. The goal, to be demonstrated by OVT4, was 2.1 cases with days away per 200,000 hours worked. The Army has demonstrated this level of worker safety at a similar chemical demilitarization plant, and the value is within the range experienced by chemical industrial plants.[1] The time-average value over the entire OVT period was 0.93 cases with days away per 200,000 hours worked. Because the campaigns were of different duration, this value cannot be computed from Table 4-1. Although not established as an OVT goal, a second and more sensitive measure of industrial injury is the "recordable case." This includes all cases with days

[1] The chemical and allied industries accident rates, compiled by the Bureau of Labor Statistics, for 1991 (BLS, 1991) were 6.4 recordable cases and 3.1 cases with days away per 100 full-time workers (about 200,000 hours). Rates for 1991 for the total manufacturing sector are 12.7 recordable cases and 5.6 cases with days away per 100 full-time workers.

away, as well as additional injury cases that do not cause the loss of one or more full days of work.

In general, the cases with days away injury rates during OVT were better than the goals that were set. However, the recordable injury rate increased during the HD projectile tests. In this campaign, problems were experienced with degraded (gelled) agent that could not be handled by the automated systems as designed. In OVT4, suited workers were continuously stationed in the munitions processing bay to handle frequent operational disruptions of the automated systems. These operations contributed to an increased worker accident frequency. The use of operators in agent processing areas that should generally be unstaffed is undesirable and should be avoided at continental U.S. sites. All accidents and injuries should be seen as indicative of human-system mismatch and investigated with the same vigor as other process upsets. Individuals with human factors expertise should be involved in these investigations.

Finally, OVT experience resulted in modifications to the design and operating procedures implemented at Tooele. The success of these changes in improving operational safety and performance should be carefully evaluated as part of the Tooele risk assessment. The probabilistic risk analysis for Tooele Chemical Agent Disposal Facility should be completed and reviewed during the systemization period. The results from the risk analysis and from on-site safety management policies will be inputs to development of emergency response plans with local authorities at continental U.S. sites.

MANAGEMENT SYSTEMS AND CONTROL SYSTEMS

The safe management of any hazardous facility requires a strong commitment to safety throughout the organization. This commitment extends from the prevention of simple accidental worker falls to avoidance of serious toxic releases and explosions. Accident rates at JACADS were generally below goals established for OVT and were comparable to rates in chemical plants. For the most part JACADS met applicable environmental requirements. However, in reviewing excursions and upset history, the committee found several recurrent problems that indicate more serious deficiencies in management systems.

One such problem, discussed in some detail above, was the frequent occurrence of false alarms. This situation must be corrected before continental U.S. operations commence. Some of the false alarms may be reduced by improved housekeeping, maintenance procedures, and combustion control. Also, the near-real-time agent monitoring system at JACADS (the ACAMS) cannot distinguish agent from some other commonly encountered compounds (fuel contaminants, antifreeze, etc.). It is therefore prone to generating false

alarms. The DAAMS, used to distinguish agent alarms from those caused by interfering chemicals, draws time-consuming samples that require laboratory analysis. In one OVT1 incident, the proper response to a real (though very low level) ACAMS alarm took three hours, although an initial response occurred in about one hour. The frequency of false alarms may make operators complacent and reluctant to stop operations—particularly when production goals are to be met. In the event of a major release, ignoring an alarm could have disastrous consequences. The Stockpile Committee monitoring report addresses this problem in more depth.

Another problem was the number of instances in which safety interlocks were bypassed or removed. Although such cases may have occurred to maintain production, they represent a serious safety problem. The multiple safety-protection layers of the facility rely on interlocks to prevent unsafe operating modes. Perhaps too many interlocks were used in an attempt to ensure safety, with unnecessary interlocks making the system too difficult to operate. Interlocks should only be used where required. They should be designed so they cannot be readily bypassed—and unauthorized and undocumented bypassing of an interlock should be considered a serious safety violation. Some of the interlock problems were caused during operator switchover from automatic to manual operation. In some cases, this switchover disabled the interlocks. This procedure invites human error and may lead to a serious safety incident. A detailed safety review of the interlock system and the associated procedures at Tooele is needed.

Deficiencies in management systems, and the bypassing of safety interlocks are indications of a need for a more thorough evaluation of total systems safety, particularly with regard to the potential for human error. A thorough analysis of accidents and process failures and an evaluation of their significance should lead to an improvement in overall safety management.

Problems with documentation and recordkeeping are another area of concern. Records are the easiest system component to check for non-compliance and can legitimately undermine public confidence if they are not maintained with scrupulous accuracy. In OVT2, removal of a safety interlock system was not documented and went undetected for several months. Removal of a sensor deactivated an interlock in another incident, allowing a potentially unsafe condition. Another area of particular concern was the inadequate documentation of software and the persistence of problems with software throughout OVT. When there are problems of inadequate staffing, pressures of meeting performance goals, and other priorities, sloppy recordkeeping can result. This is not acceptable for operation of a hazardous materials facility, and procedures for keeping documentation accurate and up-to-date are needed for Tooele and other continental U.S. sites.

There were also numerous instances at JACADS of a speed/accuracy tradeoff (SATO), including the following:

"

- Demilitarization protective ensemble suits were containerized without testing for agent because of their rapid accumulation.
- Manual operations in these suits were used to aid in processing gelled HD to avoid time delays.
- The liquid incinerator tank was operated above its upper-limit alarm point, to prevent an operational bottleneck during trial burn testing.
- The incinerator was kept hot after being stopped, to minimize restart time, without proper room ventilation.

All these cases indicate that concern with production has been allowed to compromise plant safety, with greater speed but more errors. Management needs to use such incidents as part of the basis of an ongoing training program, to ensure that SATO-induced errors are not repeated, either at JACADS or U.S. continental sites.

The Chemical Demilitarization Training Facility, Aberdeen Proving Ground, Maryland, began operations in early 1992 utilizing full-scale munitions disassembly and drain machines without agent. Members of the Stockpile Committee have visited Aberdeen several times to examine the training program and the operations and procedures of the facility. The committee believes that this facility and training program are an essential part of the overall Chemical Stockpile Disposal Program since the availability of well-trained employees is critical to the safe and efficient conduct of these hazardous chemical disposal operations.

The Army is to be commended for their recognition of the need for, and establishment of, this facility. The committee plans to monitor the effectiveness of this training program during systemization and agent operations at Tooele.

Finally, a clearer chain of management responsibility needs to be established. The fact that a facility is being operated by a contractor does not diminish the need for clear management accountability or for strong actions demonstrating full management commitment to safety above all other priorities. Personnel procedures are needed to acquire qualified staff, provide good training programs, and conduct ongoing performance evaluation programs.

5

Findings and Recommendations

Based on a review of the MITRE Corporation's assessments, visits to JACADS and other disposal facility sites, and long-term examination of the baseline system, the committee has evaluated the OVT program. Based on this evaluation, the committee recommends the initiation of systemization at the Tooele Chemical Agent Disposal Facility, subject to the understanding that the Army will simultaneously address the needed changes and modifications described in this report.

While the Johnston Atoll inventory does not include all agent and munitions combinations found at continental U.S. sites, the committee supports the Army's conclusion that tests of three munition or storage types, containing all principal stockpile agents, provided the information needed to evaluate the suitability of the JACADS process for the demilitarization of the U.S. chemical stockpile.

Disposal of M55 rockets, 105-mm artillery shells, and ton containers at JACADS exercised all the elements of the facility that will be used on the chemical stockpile. The rockets tested the rocket shearing machine, the 105-mm artillery shells exercised the disassembly machines, and the ton containers were punched and drained. Agent was destroyed in the liquid incinerator; energetic materials were burned in the deactivation furnace; and metal containers were decontaminated in the metal parts furnace. Other types of munitions will not employ operations other than these: all munitions will be disassembled; spray tanks, bombs, and land mines will be punched and drained; all agents will be destroyed in the liquid incinerator; all other energetic materials will be destroyed in the deactivation furnace; and the metal parts furnace will be used to decontaminate all metal containers. To the extent that minor testing issues remain, they will be addressed at the Army's Chemical Agent Munitions Disposal System (CAMDS) at Tooele Army Depot, Utah, before the Tooele Chemical Agent Disposal Facility is operated with agent. Thus, it is the committee's view that tests at JACADS, with supplementary Army testing at CAMDS, are sufficient to demonstrate the suitability of the baseline system to dispose of the U.S. chemical stockpile.

The committee submits the following findings and recommendations.

FINDINGS

Process Performance

Baseline system. The baseline process performance was adequately tested at the JACADS prototype facility. Despite the lack of system maturity, the process worked capably and safely, although it did not achieve all throughput goals. Following the Stockpile Committee's experience with, and observation of, the parts of JACADS in operation at the Chemical Agent Munitions Disposal System at Tooele Army Depot, the JACADS OVT has provided the committee additional assurance that the baseline system is capable of the safe disposal of the Army's chemical stockpile.

Throughput achievement. JACADS OVT throughput was generally below specified goals. Reasons for this included equipment failures and design inadequacies typical of a prototype facility.

Specific actions to improve future process performance were identified during OVT. Those that were applied during OVT resulted in improved throughput of agent and munitions. These and other improvements can be expected to yield additional process performance improvements over time, particularly if more thoroughly engineered improvements can be implemented during systemization at Tooele and installed at other continental U.S. facilities.

Impact of reduced process performance. Full attainment of original process performance goals is not likely in the near future, although continuing improvements will be achieved over time. A throughput shortfall of the magnitude observed during JACADS OVT will have relatively little impact on either total program life-cycle costs or the chemical demilitarization destruction schedule.

Environmental Compliance

Agent emissions. There was no detected emission of agent during normal operations. The only confirmed emission incident, which occurred during shutdown, was well below allowable stack concentration levels. Since no agent was measured in the exhaust stack during destruction operations, the destruction removal efficiency was better than the RCRA-required 99.99 percent efficiency in all cases.

For all agents, the liquid incinerator demonstrated better than 99.9999 percent destruction removal efficiency. For the metal parts furnace, the HD destruction removal efficiency could only be verified to be greater than

99.9996, the highest destruction removal efficiency that could be verified by the agent monitoring system. Three states (Indiana, Kentucky, and Maryland) now require 99.9999 percent destruction removal efficiency for all furnaces, a more stringent requirement than the 99.99 percent requirement at JACADS. The Army may find it necessary to improve agent monitoring sensitivity to verify the more stringent requirement.

Non-agent emissions. Non-agent air emissions from JACADS were maintained within RCRA-permitted limits. These emissions include particulate matter, HCl, and CO · and O_2 concentrations. The high concentration levels of NO_x emitted when destroying VX may require additional gas treatment to meet Clean Air Act requirements at specific continental U.S. sites. In three of four deactivation furnace system performance trial burns, the destruction removal efficiency for PCBs was better than the TSCA requirement of 99.9999 percent, the exception being 99.99986 percent (NRC, 1993a). In the fourth, not enough agent was fed to the furnace to allow a confirming calculation. The design for an enhanced deactivation furnace system afterburner, to be employed at continental U.S. sites, should enable these plants to comply with TSCA requirements. The detected products of incomplete combustion were similar to those observed during the burning of fuel oil alone. Total dioxin/furan levels were extremely low (0-0.16 ng/m^3), well below the U.S. standard for municipal waste incinerators (30 ng/m^3).

Support system performance. RCRA-required compliance testing on the pollution abatement system of the brine reduction area and the dunnage furnace was not performed during OVT. A concern about the pollution abatement system of the dunnage furnace is that it does not provide for the scrubbing of acidic gases. Consequently, the incineration of chlorine-containing materials (e.g., demilitarization protective ensembles) may result in excessive acid gas emissions. For brine disposal, the option of shipment and disposal might be a better choice than operation of the brine reduction area. The environmental performance of these two systems or the performance of alternative systems must be determined and their acceptability confirmed prior to initiating agent destruction at Tooele.

Hazardous waste handling and RCRA requirements. During JACADS OVT there were numerous administrative noncompliances of RCRA procedural requirements for tracking, accumulation and storage, and waste minimization. These noncompliances decreased as the Army gained experience with the RCRA requirements over the four OVT campaigns. Nevertheless, by the end of the final campaign with HD projectiles, JACADS personnel still did not fully comply with certain procedural provisions of the

RCRA permit, including data recording, equipment inspections, and timely process waste handling.

Compliance with administrative requirements. Two categories of administrative compliance remain a concern: timely notification to the Environmental Protection Agency of facility modifications to JACADS, and the generation of large quantities of hazardous waste because of an essentially nonexistent waste minimization program. RCRA requires that waste minimization be a part of any hazardous waste handling program. Although JACADS's standing operating procedures contain a very positive waste minimization statement, there was no active program in this area throughout the entire OVT. The waste minimization effort at JACADS has not resulted in any quantifiable waste reduction. (A waste minimization program was put in place late in the OVT program.)

RCRA permit. The RCRA permit includes very detailed requirements for data collection, retention, and reporting; operating conditions and waste feeds to the furnaces; waste handling and storage; and other operations. A detailed review of the RCRA permit by the Army during the first OVT campaign showed over one hundred ambiguities, errors, omissions, and other problems in the permit itself, which complicated compliance by the operations and maintenance contractor and the Army. Close coordination between the Army and the permitting states in defining RCRA permit conditions at continental U.S. sites is important to facilitate the meeting of RCRA requirements.

Excursions and Upsets: Safety and Operability Implications for Continental U.S. Sites

Analyses of the general types of failure incidents described in the MITRE OVT reports do suggest some areas where there are opportunities for improved safety performance in addition to those already implemented during OVT. These opportunities need to be investigated and evaluated during systemization testing at the Tooele Chemical Agent Disposal Facility.

Overall safety management. Many OVT incidents involved human error indicative of deficiencies in procedures, training, or management priorities. "Quick fixes" to minimize downtimes often create other problems that may compromise safety and result in delaying implementation of robust engineering or operational solutions.

Enforcement of safety requirements. Safety violations, such as the removal of interlocks, improper responses to critical alarms, and operation with some safety systems deactivated, are serious problems that require changes in training, job priorities, and management accountability.

Procedures for safety evaluations of human and equipment failures. The JACADS safety department's review process does not make an adequate connection between the analysis of human and equipment failures and safety. The safety analysis needs to address the implications of the failures and events observed during OVT for the risk of releases, fires, explosions, and other consequences. Accident or event sequence diagrams that depict pathways to agent releases are an ideal tool for this type of safety analysis. The goal is to better reveal the levels of protection available when failures occur. This may require more engineering- and operations-based analyses than evidently have been performed. Accident event analysis is also an important way to identify and correct apparent deficiencies in compliance with procedures.

Support system performance. Reliable operation of power supplies, heating, ventilating, and air conditioning systems, and control systems is essential to overall operational safety. Auxiliary systems such as the dunnage furnace and brine reduction area were not satisfactorily modified and tested after problems were experienced.

Plant monitoring systems. The current ACAMS is sensitive enough to detect very small concentrations of agent, but results in many false alarms. Monitors are able to detect only one agent at a time and, for major releases, may have a sampling time that is longer than required for timely response. Additional and alternative instrumentation appears to have the potential to minimize these problems (NRC, 1994b). The agent monitoring systems on the pollution control systems common stack, the dunnage furnace and brine reduction area stacks, and the exhaust filter stacks operated effectively to detect agent if it was present. Agent alarms occurred frequently throughout OVT; however, all but one were concluded to be false alarms. The one true alarm indicated a release of agent at 0.22 of the allowable stack concentration. This release, resulted from operator error, did not present a significant health or environmental impact. However, these limitations in monitoring systems may make operators complacent about alarms. The Stockpile Committee monitoring report addresses improvements in the monitoring systems for the prompt detection and identification of each type of agent. An improved system could be implemented and proved at JACADS during agent operations simultaneously with systemization tests at the Tooele Chemical Agent Disposal Facility.

Furnace operational problems. In the liquid incinerator, gaseous products condense in the secondary chamber and downstream piping walls, flow toward the bottom of these systems, and solidify to a glassy slag of condensed salts. This slag plugs the gas flow passages and corrodes the brick linings to an extent that the system must be shut down and cooled for lining repair and manual removal of slag. An alternative hot slag removal system, designed to reduce these problems, is planned but has not been demonstrated.

With regard to the metal parts furnace, experience has shown that a larger quantity of gelled HD than initially predicted fails to drain from the munitions or ton containers that are fed to the furnace. These large residues substantially reduce the processing rate through the furnace. Modification of the metal parts furnace design or successful trial burns with a larger amount of residual gelled agent would allow permitted thermal destruction of a larger residual of gelled HD. Alternatively, a chemical treatment process might be developed for dissolving and subsequently draining gelled HD prior to metal decontamination.

While an apparent detonation of rocket burster pieces during OVT2 penetrated the one-half-inch kiln wall at JACADS, the kiln has a two-inch wall design for continental U.S. installations. This more robust design is intended to contain such a detonation. In addition, kiln structural bolts and feed chute systems were redesigned.

Review of additional worker operations to compensate for mechanical operational problems. During both OVT3 and OVT4, problems with the agent and equipment (e.g., due to gelled mustard agent) were handled by having suited workers monitor operations. Removal of salts from the liquid incinerator also required manual operations because of the unsatisfactory performance of an automated system. These operational modes were not part of the original design and cannot be accepted as normal procedures.

Inventory control of agent. The deactivation furnace system and metal parts furnace are designed to handle limited quantities of residual agent. The current JACADS RCRA permit requires that munitions and containers be drained to less than 5 percent of the agent content because they were expected to be drained to that level. However, in the case of gelled agent, such drainage is often not possible, and waivers were required to proceed even though agent levels were within the safe capacity of the furnace. A more appropriate criterion could be established based on the actual quantity that can be safely treated by the agent destruction system. For example, munitions that cannot be drained to a 5 percent residual because of gelling (or uncertainty in gauging) can be fed to the furnaces at reduced rates, but the

guidelines for allowing this feed process should be clearly defined in terms of the capacity of the system. The residual quantities of agent are largest for the tank configurations.

If the tank tare weight was unknown during JACADS OVT, the change in agent quantity after draining was determined by manual insertion of a wooden dowel (dipstick) into the tank. An automatic system needs to be developed to measure the quantity of remaining agent more accurately and to eliminate the need for manual measurements by maintenance personnel in protective clothing. Finally, with a smaller agent storage tank planned for continental U.S. sites, improved inventory control systems may be required.

Munitions tracking capability. Deficiencies observed at JACADS in munitions tracking are a safety concern and call for modification. During OVT4, there were eight occasions during which tracking of munitions failed, resulting in improperly processed munitions moving ahead and creating potential problems. Furnaces receiving the wrong feed seriously compromise one of the key advantages of the baseline system. JACADS experience showed that it was possible to advance an M55 rocket past the punch-and-drain position without it being punched and drained, and that it was not possible to back up the rocket automatically to the punch-and-drain position. Procedures or equipment can be developed so that the solution to such a problem is not left to the discretion of the shift supervisor. In another incident, a detonation in the deactivation furnace system resulted in no agent release, since the rocket had been properly drained. It is conceivable that, had the undrained rocket feed coincided with the detonation in the kiln, agent release through the stack might have occurred. Munitions tracking is critical to the safety of the special purpose furnaces. The system can be improved to eliminate the possibility of undrained munitions being fed to furnaces.

Training programs. The current training program at the Chemical Demilitarization Training Facility, Aberdeen Proving Ground, Maryland, is an essential part of the overall Chemical Stockpile Disposal Program. The availability of well-trained employees is critical to the safe and efficient conduct of these hazardous operations.

RECOMMENDATIONS

Give safety considerations priority over production goals.

Safety considerations should continue to be given primary consideration over the achievement of production goals when there are conflicts between the two. The Army should establish an independent, ongoing, on-site safety

oversight program to ensure that safety is not compromised during destruction operations. The Army should also consider the use of reader-checker implementation of operating procedures, and the simulation of abnormal events during training, which are common practices in the airline and nuclear power industries, respectively.

Proceed with Tooele systemization, and during systemization, conduct needed testing and improvement activities.

The Tooele systemization program, and the continued operation of JACADS during the Tooele systemization, should be used to conduct the following activities:

1. Develop and demonstrate an improved agent monitoring and identification system.
2. Complete the brine reduction area and pollution abatement system performance tests, or develop a satisfactory brine disposal alternative.
3. Demonstrate the dunnage furnace performance with various levels of chlorinated waste; if needed, either modify the pollution abatement system design (e.g., add acid gas scrubbing) or limit feed materials to those that can be handled by the existing design; alternatively, satisfactory land disposal options must be identified.
4. Review the probable levels of NO_x production from VX destruction and the allowable emission levels at the other continental U.S. sites requiring VX destruction; if appropriate, develop needed NO_x abatement systems.
5. Develop and demonstrate the proposed hot-slag removal system for the liquid incinerator.
6. Eliminate furnace feed errors by improved monitoring and control of the deactivation furnace system and metal parts furnace feed systems and by improved methods for tracking the various types of munitions.
7. Address all problems associated with residual gelled mustard, in particular, the use of suited personnel to perform functions that were intended to be automated.

Further, systemization should be conducted on an "as needed" basis, rather than according to the planned 18-month schedule, to ensure that process, procedure, and equipment improvements are not inhibited by arbitrary program deadlines.

Establish and maintain close working relationships with permitting agencies, and support these efforts with careful analysis of operating parameters to ensure that permits provide for safe destruction of agent, adherence to regulatory requirements, and effective plant operations.

Part of the Army's inability to comply with RCRA permit requirements resulted from poorly drafted or ill-conceived permit provisions. Because continental U.S. sites will be given permits by the individual states in which such sites are located, the Army should work closely with the regulatory agencies in those states to ensure that the agencies understand the structure, operation, and capabilities of the facilities they are permitting, and to ensure that permit requirements are both internally consistent and operationally realistic. In addition, since the deactivation furnace system will also require a TSCA permit, which is issued by the Environmental Protection Agency, the Army should ensure that state and federal permit proceedings are coordinated, both procedurally and substantively. The Army should support these efforts with thorough analysis of the draft permits, with particular emphasis on known problem areas and differences between JACADS and continental U.S. facilities, to minimize the need for later permit modifications or variances.

Establish programs, procedures, and management oversight to ensure continuing compliance with all environmental regulations.

There were numerous administrative noncompliances of RCRA requirements during JACADS OVT, and JACADS personnel were unable to comply fully with certain provisions of the RCRA permit. The Army must conduct a detailed review of RCRA permit requirements and provisions, and establish and maintain programs to ensure compliance with waste tracking, accumulation, and storage requirements; collection and maintenance of required operating data; and the establishment of a waste minimization program. Failure to ensure compliance runs the risk of both government enforcement and citizen lawsuits, with the potential to delay operations for periods of time sufficient to jeopardize treaty compliance.

Develop systems to improve overall management of safety.

Better management systems, based on analysis of observed "precursor events" (e.g., equipment failures and human errors), are needed to improve on the experience demonstrated during OVT at JACADS. Management systems, including continuing training and performance evaluation programs,

need to ensure implementation of a totally safe operations philosophy. The identification and mitigation of factors related to human error are critical. Specifically, issues of importance include—

- clear accountability,
- properly qualified personnel,
- identification of factors related to human error,
- motivation of operation and maintenance staff to perform responsibly and well,
- continuing training and performance programs,
- full adherence to all safety procedures,
- assurance of the integrity of all critical safety systems,
- careful management and documentation of changes, and
- well-defined and documented procedures for reporting abnormal incidents and for ongoing safety review.

Complete the risk assessment for the Tooele Chemical Agent Disposal Facility during the systemization period.

Experience from OVT at JACADS has resulted in a number of changes to the design and planned operations at Tooele. The results of these changes should be examined as part of the Army's risk assessment activity prior to introducing agents and munitions. The Tooele risk assessment, along with any further design modifications and identified differences in site conditions, will provide a foundation for subsequent site-specific risk assessments for other continental U.S. sites.

References and Bibliography

MITRE. 1991. Evaluation of the GB Rocket Campaign: Johnston Atoll Chemical Agent Disposal System: Operational Verification Testing. McLean, Va.: MITRE Corporation.

MITRE. 1992. Evaluation of the VX Rocket Test: Johnston Atoll Chemical Agent Disposal System: Operational Verification Testing. McLean, Va.: MITRE Corporation.

MITRE. 1993a. Evaluation of the HD Ton Container Test: Johnston Atoll Chemical Agent Disposal System: Operational Verification Testing (April). McLean, Va.: MITRE Corporation.

MITRE. 1993b. Evaluation of the HD Projectile Test: Johnston Atoll Chemical Agent Disposal System: Operational Verification Testing (May). McLean, Va.: MITRE Corporation.

MITRE. 1993c. Summary Evaluation of the Johnston Atoll Chemical Agent Disposal System: Operational Verification Testing (May). McLean, Va.: MITRE Corporation.

National Research Council (NRC). 1984. Disposal of Chemical Munitions and Agents. Committee on Demilitarizing Chemical Munitions and Agents. Washington, D.C.: National Academy Press.

National Research Council (NRC). 1991. Review of the MITRE Report: Evaluation of the GB Rocket Campaign: Johnston Atoll Chemical Agent Disposal System Operational Verification Testing, dated May, 1991. Committee on Review and Evaluation of the Army Chemical Stockpile Disposal Program. Washington, D.C.: Board on Army Science and Technology.

National Research Council (NRC). 1993a. Report to the Assistant Secretary of the Army, Evaluation of the Johnston Atoll Chemical Agent Disposal System Operational Verification Testing: Part I. Committee on Review and Evaluation of the Army Chemical Stockpile Disposal Program. Washington, D.C.: Board on Army Science and Technology.

National Research Council (NRC). 1993b. Alternative Technologies for the Destruction of Chemical Agents and Munitions. Committee on Alternative Chemical Demilitarization Technologies. Washington, D.C.: National Academy Press.

National Research Council (NRC). 1994a. Recommendations for the Disposal of Chemical Agents and Munitions. Committee on Review and Evaluation of the Army Chemical Stockpile Disposal Program. Washington, D.C.: National Academy Press.

National Research Council (NRC). 1994b. Review of Monitoring Activities within the Army Chemical Stockpile Disposal Program. Committee on Review and Evaluation of the Army Chemical Stockpile Disposal Program. Washington, D.C.: National Academy Press.

SAIL-PMR. 1991. Information Paper. Subject: Sensitivity of CSDP Schedules and Programmatic Cost to Plant Through-Put Rates, SAIL-PMR, 2 May 1991.

Southern Research Institute (SRI). 1992. Results of the RCRA Trial Burn with VX Feed for the Liquid Incinerator at Johnston Atoll Chemical Agent Disposal, Final Report. June 1992. SRI-APC-92-384-7530.11.1-I-R3. Birmingham, Alabama.

USATHAMA. 1982. Long Range Chemical Demilitarization Concept Study—Revised. Aberdeen Proving Ground, Md.: U.S. Army Toxic and Hazardous Materials Agency.

USATHAMA. 1983. Final Demilitarization Plan for Operation of the Chemical Agent Munitions System (CAMDS) at Tooele Army Depot, Ut. Aberdeen Proving Ground, Md.: U.S. Army Toxic and Hazardous Materials Agency.

U.S. Army. 1988. Chemical Stockpile Disposal Program Final Programmatic Environmental Impact Statement (PEIS). Available from Program Manager for Chemical Demilitarization, Aberdeen Proving Ground, Md.

RCRA TRIAL BURN REPORT
FOR
AGENT GB/DUNNAGE

IN THE DUNNAGE INCINERATOR
AT THE
JOHNSTON ATOLL
CHEMICAL AGENT DISPOSAL SYSTEM

B128

MARCH 1995

PREPARED FOR: PROGRAM MANAGER
CHEMICAL DEMILITARIZATION
ENVIRONMENTAL AND MONITORING DIVISION
ABERDEEN PROVING GROUND
MARYLAND 21010-5401

PREPARED BY: RAYTHEON ENGINEERS & CONSTRUCTORS, INC.
30 SOUTH 17TH STREET
PHILADELPHIA, PENNSYLVANIA 19103

RESULTS OF THE TRIAL BURN FOR
THERMAL DESTRUCTION OF AGENT GB IN THE
JOHNSTON ATOLL CHEMICAL AGENT DISPOSAL SYSTEM DUNNAGE INCINERATOR

EXECUTIVE SUMMARY

This report summarizes the results of a trial burn which was conducted in the Dunnage Incinerator System (DUN) according to the Resource Conservation and Recovery Act (RCRA) performance requirements for hazardous waste incinerators. This trial burn was conducted to show that the DUN incinerator could process Agent GB contaminated dunnage in a normal operating mode while being safe and protective of the environment.

Raytheon Engineers & Constructors (RE&C), in concert with other subcontractors, coordinated and performed this trial burn from December 5 to December 8, 1994. The trial burn was conducted in the DUN by processing nerve Agent GB contaminated dunnage. Known quantities of nerve Agent GB (Isopropyl methylphosphonofluoridate) was absorbed in cellulose material in a polyethylene carboy. This container was then placed in a cardboard box containing wood pallets and fed to the DUN incinerator. Agent GB was the primary DUN hazardous waste feed. The remaining feed material was non-hazardous. As such, GB was considered the principal organic hazardous constituent (POHC) for the trial burn. The DUN trial burn consisted of four sequential test runs lasting approximately four hours each, during which considerable sampling and analyses were performed. The purpose of the testing and analysis was to verify that the DUN could efficiently destroy GB contaminated dunnage while being protective of human health and the environment. This report summarizes the field activities, chemical analyses, and data analyses associated with these tests.

The specific objectives of this effort were to:

1. Demonstrate that the DUN is capable of performing at a level equal to or better than the following basic RCRA hazardous waste incineration performance standards:

   a. Verify by analysis that at least 99.99% of all GB fed to the DUN was destroyed - confirming the required minimum destruction and removal efficiency (DRE).

   b. Show by analysis and testing that the stack particulate emissions were maintained below 180 mg/dscm (0.08 grains per dry standard cubic foot) corrected to 7% oxygen when processing hazardous waste.

   c. Maintain hydrochloric acid (HCl) emissions in the stack gases below 4 lb/hr or achieve a minimum of 99% HCl removal efficiency.

2. Operate the DUN such that the one hour rolling average carbon monoxide concentration (corrected to 7% oxygen on a dry gas basis) in the exhaust gas downstream of the afterburner is maintained below 100 ppm with allowable peaks of up to 200 ppm (corrected to 7% oxygen on a dry gas basis) not to exceed five minutes in duration.

In addition to demonstrating equivalent RCRA performance standards, the DUN system exhaust gas was monitored for the following:

- Oxygen (O_2)
- Carbon Dioxide (CO_2)
- Volatile and semivolatile products of incomplete combustion (PICs)
- Polychlorinated dibenzo-p-dioxins and furans (PCDD/F)
- Selected Metals
- Total Hydrocarbons
- Oxides of nitrogen (NO_x)
- Sulfur dioxide (SO_2)
- Hydrogen Fluoride (HF)
- Particulate size distribution
- Particulate breakthrough

Samples of DUN system solid waste and liquid discharge were analyzed for:

- Agent GB
- Volatile and semivolatile PICs
- PCDD/Fs
- Selected Metals
- Chlorides and Fluorides
- Reactivity and pH

The DUN operational parameters were monitored to ensure compliance with RCRA permit performance requirements and to calculate energy and material balance data.

During all four test runs, the Automatic Continuous Air Monitoring System (ACAMS) monitored the exhaust gas for agent. None was detected. The ACAMS Limit of Quantification (LOQ) was 0.00006 mg/m^3. The Agent GB hourly feed rate to the DUN was 10.3 pounds per hour (lb/hr). To calculate the DRE, the LOQ value was used recognizing that the actual DRE would be higher than the calculated value. The calculated DRE for the demonstration test burn ranged from >99.9999868% to >99.9999870%. This indicated that the average Agent GB emission rate was less than 1/750th of the allowable quantity based on the RCRA required DRE of 99.99%.

The maximum hourly rolling average CO concentration in the exhaust gas was 46.1 ppm (corrected to 7% O_2). The maximum five minute average concentration was 62.2 ppm corrected to 7% O_2. This demonstrates that the CO concentration was continuously maintained below the permit limits of 100 ppm hourly rolling average and 200 ppm five minute peak.

The particulate matter emission concentration averaged 6.7 mg/dscm, with a peak concentration of 16.0 mg/dscm. The highest particulate emission concentration was less than 9% of the allowable rate of 180 mg/dscm and occurred during Test Run 4. This peak resulted from activation of the baghouse air pulsation system, thereby, reducing the baghouse's effectiveness by removing the "filter cake" from the bags. Also, the dislodged particulates became reentrained and were emitted through the stack.

HCl was detected in the stack gas during all four test runs. The emission rate varied from 0.59 to 0.72 lb/hr. Thus, the emission rate ranged from 15% to 18% of the allowed 4 lb/hr.

The results of the Trial Burn with Agent GB feed for the DUN showed it performed well within the defined RCRA permit parameters.

TABLE OF CONTENTS

Table List
Figure List
List of Acronyms

Section		Page
ES	EXECUTIVE SUMMARY	
1.0	INTRODUCTION	
	1.1 Purpose of the Test Program	1-1
	1.2 Scope of This Report	1-3
	1.3 Trial Burn Team	1-3
2.0	SUMMARY OF DATA	
	2.1 Steady State Operating Conditions	2-2
	2.2 Destruction of Chemical Agent (POHC)	2-2
	2.3 Particulate Emissions	2-2
	2.4 HCl Emissions	2-2
	2.5 HF Emissions	2-3
	2.6 Carbon Monoxide	2-3
	2.7 Metals	2-3
	2.7.1 Analysis of Liquid Process Samples for Metals	2-3
	2.7.2 Stack Emissions of Metals	2-3
	2.7.3 Ash Leachate	2-4
	2.8 Products of Incomplete Combustion	2-4
	2.9 Dioxin/Furan Emissions	2-4
	2.10 Total Hydrocarbons	2-4
	2.11 Quality Assurance/Quality Control	2-4
3.0	FACILITY DESCRIPTION	
	3.1 The Johnston Atoll Chemical Agent Disposal System (JACADS) Facility	3-1
	3.2 DUN Description	3-2
	3.3 Feed for the Trial Burn	3-3
	3.4 Sampling Requirements	3-3
	3.5 Facility Instrumentation	3-3
4.0	TEST PROCEDURES	
	4.1 Preparation for Testing	4-1
	4.2 Continuous Collection Methods	4-2
	4.2.1 Continuous Emission Monitors (CEMS)	4-2
	4.2.2 Chemical Agent Monitors	4-2

TABLE OF CONTENTS (cont'd)

Section		Page
4.3	Manual Sample Collection Methods	4-2
4.3.1	Modified Method Five (MM5)	4-2
4.3.2	Volatile Organic Sampling Train (VOST)	4-2
4.3.3	Method Five Acid Train (M5AT)	4-2
4.3.4	Multiple Metals Train (MMT)	4-2
4.3.5	Particle Size Distribution	4-3
4.3.6	Orsat	4-3
4.3.7	Support Methods	4-3
4.3.8	Total Hydrocarbons (THC)	4-3
4.4	Sample Collection Sequence and Procedure	4-3
4.4.1	Trial Burn Sequence	4-3
4.4.2	Sample Collection Procedure	4-4
4.4.3	Sampling Contingency Plan	4-6
4.5	Analysis	4-7
4.6	Analysis Summaries	4-7
4.6.1	Semivolatile Organics Analysis	4-7
4.6.1.1	Extractions	4-7
4.6.1.2	Analytical Procedures for Determining Semivolatile Organics	4-8
4.6.1.2.1	Polychlorinated Dibenzo-p-dioxins and Polychlorinated Dibenzofurans	4-8
4.6.1.2.2	Base-Neutral-Acid Analysis	4-9
4.6.2	Volatile Organics Analysis	4-9
4.6.3	Anions Analysis	4-10
4.6.4	Metals Analysis	4-10
4.6.5	pH and Reactivity Measurements	4-11
4.6.6	Particulates	4-11
5.0	TEST RESULTS	
5.1	Introduction	5-1
5.2	Process Data	5-1
5.2.1	Process Data Acquisition and Recording	5-1
5.2.2	Stack Sampling Data	5-2
5.2.2.1	Sample Calculations	5-2
5.2.3	Chemical Agent Feed Rate	5-3

TABLE OF CONTENTS (cont'd)

Section		Page
5.3	Results From the Determination of Semivolatile Organics	5-3
	5.3.1 General	5-3
	5.3.2 Results	5-4
	5.3.2.1 Stack Gas Samples	5-4
	5.3.3.2 Ash Samples	5-4
	5.3.3.3 Liquid Samples	5-4
	5.3.3 Sample Calculations	5-4
	5.3.3.1 Ash Samples	5-4
	5.3.3.2 MM5 Trains	5-5
5.4	Dioxins and Furans (PCDD/Fs)	5-6
	5.4.1 Results	5-6
	5.4.2 Sample Calculations	5-7
5.5	Volatile Organics Analyses	5-9
	5.5.1 Results	5-9
	5.5.2 Sample Calculations	5-10
	5.5.2.1 Aqueous Process Samples	5-10
	5.5.2.2 VOST Tubes	5-10
	5.5.2.3 Stack Gas Concentration of Benzene	5-10
5.6	Anions Analysis	5-11
	5.6.1 Chlorides in Stack Gas	5-11
	5.6.2 Fluorides in Stack Gas	5-12
	5.6.3 Sample Calculations	5-12
	5.6.3.1 Hydrochloric Acid	5-12
	5.6.3.2 Hydrofluoric Acid	5-13
5.7	Metals Analysis	5-13
	5.7.1 Results	5-13
	5.7.2 Sample Calculations	5-15
	5.7.2.1 Stack Emissions	5-15
	5.7.2.2 Stack Emissions of MMT Mercury	5-16
	5.7.2.3 Process Samples	5-16

TABLE OF CONTENTS (cont'd)

Section		Page
	5.8 Reactivity and pH Analysis	5-16
	5.9 Particulate Measurements	5-17
	5.9.1 Emission Rate	5-17
	5.9.2 Particle Size Distribution	5-17
	5.10 Chemical Agent - POHC	5-18
	5.10.1 Results	5-18
	5.10.2 Destruction and Removal Efficiency	5-18
	5.11 Total Hydrocarbons	5-19
	5.11.1 Sample Calculations	5-19
6	QUALITY ASSURANCE AND QUALITY CONTROL	
	6.1 Background	6-1
	6.2 Semivolatile Organic Analysis	6-2
	6.3 Volatile Organic Analysis	6-3
	6.4 Metals Analysis	6-4
	6.5 HCl and HF Analysis	6-5
	6.6 Dioxins and Furans	6-5
	6.7 QA/QC Summary	6-7

APPENDICES

A	Chain of Custody Documents
B	Operator's Log
C	Process Data
D	Sampling Data
E	Continuous Emission Monitor Data
F	METCO Environmental Source Emissions Survey
G	Test Plan and Contract Modifications
H	Dioxins/Furans
I	GC/MS Volatiles
J	GS/MS Semivolatiles
K	Metals Analysis
L	TCLP and Reactivity
M	Field Notebook

TABLE LIST

Table No.		Page
2-1	Summary of System Test Conditions and Results	2-6
2-2	Metal Analyses of Quench Liquids, Process Water and Fuel Oil	2-7
2-3	Stack Gas Metals Concentrations	2-8
2-4	Metal Analyses of Composite Ash Samples	2-9
2-5	Stack Gas Semivolatile Products of Incomplete Combustion	2-10
2-6	Stack Gas Volatile Products of Incomplete Combustion	2-11
2-7	Stack Gas Analysis for Dioxins and Furans	2-12
2-8	Total Hydrocarbons in Stack Gas	2-13
3-1	Sampling and Analysis Requirement for RCRA DUN Trial Burn	3-5
3-2	Location of Sampling Points for Method 5 and Modified Method 5 Acid Train, Multiple Metals Train and Particulates	3-10
3-3	Facilities Emissions Monitoring Instrumentation	3-11
5-1	DUN PDAR Data	5-20
5-2	Process Data From Manual Stack Sampling	5-21
5-3	Integrated Orsat Stack Data	5-22
5-4	Composition of Typical DUN Waste Feed Charge	5-23
5-5	Modified Method 5 Train Conditions and Results	5-24
5-6	Stack Gas Analyses for Semivolatile Products of Incomplete Combustion - RCRA Compounds and Additional Clean Air Compounds	5-25
5-7	Semivolatile Results Summary for MM5 Train	5-26
5-8	Stack Gas Semivolatile Compounds Detection Limits	5-27
5-9	Stack Gas Semivolatile Tentatively Identified Compounds	5-30

TABLE LIST (cont'd)

Table No.		Page
5-10	Semivolatile Results in Ash Samples	5-37
5-11	Semivolatile Tentatively Identified Compounds in Ash Samples	5-38
5-12	Process Samples, Semivolatile Results Summary - RCRA Compounds and Additional Clean Air Compounds, Test Run 1	5-39
5-13	Process Samples, Semivolatile Results Summary - RCRA Compounds and Additional Clean Air Compounds, Test Run 2	5-40
5-14	Process Samples, Semivolatile Results Summary - RCRA Compounds and Additional Clean Air Compounds, Test Run 3	5-41
5-15	Process Samples, Semivolatile Results Summary - RCRA Compounds and Additional Clean Air Compounds, Test Run 4	5-42
5-16	Semivolatile Tentatively Identified Compounds in Quench Liquid Samples	5-43
5-17	Stack Gas Analyses of Dioxins and Furans	5-45
5-18	Determination of Total PCDDs/PCDFs in MM5 Trains	5-46
5-19	Determination of Target PCDDs/PCDFs in MM5 Trains	5-48
5-20	Determination of Total PCDDs/PCDFs in Process Water	5-52
5-21	Determination of Target PCDDs/PCDFs in Process Water	5-53
5-22	Determination of Total PCDDs/PCDFs in Fuel Oil	5-55
5-23	Determination of Target PCDDs/PCDFs in Fuel Oil	5-56
5-24	Determination of Total PCDDs/PCDFs in Quench Liquid	5-58
5-25	Determination of Target PCDDs/PCDFs in Quench Liquid	5-59
5-26	Determination of Total PCDDs/PCDFs in Ash	5-61
5-27	Determination of Target PCDDs/PCDFs in Ash	5-62

TABLE LIST (cont'd)

Table No.		Page
5-28	Stack Gas Analyses for Volatile Products of Incomplete Combustion	5-64
5-29	VOST Stack Gas Detection Limits for Volatile Organic Compounds	5-65
5-30	Stack Gas VOST Volatile Organics Results Summary, Test Run 1	5-67
5-31	Stack Gas VOST Volatile Organics Results Summary, Test Run 2	5-69
5-32	Stack Gas VOST Volatile Organics Results Summary, Test Run 3	5-71
5-33	Stack Gas VOST Volatile Organics Results Summary, Test Run 4	5-73
5-34	Stack Gas VOST Volatile Tentatively Identified Compounds	5-75
5-35	Fuel Oil Samples, Volatile Organic Compounds	5-86
5-36	Aqueous Samples, Volatile Organics Summary	5-87
5-37	Volatile Organics, Detection Limits in Aqueous Samples	5-88
5-38	Volatile Tentatively Identified Compounds in Quench Liquid Samples	5-90
5-39	Volatile Results in Ash	5-91
5-40	Volatile Tentatively Identified Compounds in Ash Samples	5-92
5-41	Method 5 Acid Train Conditions and Results	5-93
5-42	Acid Train Results, HCl in Test Run 1	5-94
5-43	Acid Train Results, HCl in Test Run 2	5-95
5-44	Acid Train Results, HCl in Test Run 3	5-96
5-45	Acid Train Results, HCl in Test Run 4	5-97
5-46	Acid Train Results, HF in Test Run 1	5-98
5-47	Acid Train Results, HF in Test Run 2	5-99

TABLE LIST (cont'd)

Table No.		Page
5-48	Acid Train Results, HF in Test Run 3	5-100
5-49	Acid Train Results, HF in Test Run 4	5-101
5-50	Method 5 Multiple Metals Train Conditions and Results	5-102
5-51	Stack Gas Analyses for Metals	5-103
5-52	Stack Gas Metals Results - Test Run 1	5-104
5-53	Stack Gas Metals Results - Test Run 2	5-105
5-54	Stack Gas Metals Results - Test Run 3	5-106
5-55	Stack Gas Metals Results - Test Run 4	5-107
5-56	Metals, Detection Limits in Stack Gas	5-108
5-57	Metals Results in Quench Liquid Samples	5-109
5-58	Metals Analysis - Process Water Samples	5-110
5-59	Metals Results in Fuel Oil Samples	5-111
5-60	Metals Analyses of Composite Ash Samples	5-112
5-61	Reactivity and pH	5-113
5-62	Reactivity of Ash Samples	5-114
5-63	Agent Feed Rate and DRE	5-115
5-64	Total Hydrocarbons in Stack Gas	5-116
6-1	Recoveries of MM5 Field Spike	6-8
6-2	Semivolatile Results Summary, Laboratory Blanks	6-9
6-3	Semivolatile Quality Control Analyses	6-10
6-4	Furnace Ash VOA Matrix Spike Data	6-11
6-5	Baghouse Ash VOA Matrix Spike Data	6-12
6-6	Quench Liquid VOA Matrix Spike Data	6-13
6-7	Process Water VOA Matrix Spike Data	6-14

TABLE LIST (cont'd)

Table No.		Page
6-8	Fuel Oil Samples VOA Matrix Spike Data	6-15
6-9	Metals QC Table Process Water Post Test - Test Run 4, Sample No. DUN4-MT-957	6-16
6-10	Metals QC Table Quench Liquid Post Test - Test Run 2, Sample No. DUN2-MT-162	6-17
6-11	Metals QC Table Fuel Oil Pre Test - Test Run 3, Sample No. DUN3-MT-236	6-18
6-12	MMT Metals Analysis QC, Front Half Method Spike	6-19
6-13	MMT Metals Analysis QC, Back Half Method Spike	6-20
6-14	Metals Analysis QC Table - FMMT (Acid Train), Method Spike on Microwave Digestion Blank	6-21
6-15	Baghouse Ash Metals Analysis QC Table, Sample No. DUN4-MT-939	6-22
6-16	Furnace Ash Metals Analysis QC Table, Sample No. DUN4-MT-388	6-23
6-17	Metals QC Analysis for Mercury	6-24
6-18	Acid Train QC	6-25
6-19	Target PCDD/Fs in MM5 Trains QC Analyses	6-26
6-20	Total PCDDs/Fs in Process Water QC Analyses	6-27
6-21	Total PCDDs/Fs in Quench Liquid QC Analyses	6-28
6-22	Total PCDDs/Fs in Fuel Oil QC Analyses	6-29
6-23	Total PCDDs/Fs in Ash Samples QC Analyses	6-30

FIGURE LIST

Figure No.		Page
3-1	Location of Johnston Island	3-12
3-2	Johnston Island	3-13
3-3	Schematic Diagram of DUN Incinerator and Pollution Abatement System (PAS)	3-14
3-4	Sample Ports on DUN Stack	3-15
4-1	Schematic Diagram of DUN Incinerator and Pollution Abatement System (PAS)	4-12
5-1	DUN Trial Burn #1: Afterburner (Oxygen Concentration)	5-117
5-2	DUN Trial Burn #1: Afterburner (CO @ 7% O_2)	5-118
5-3	DUN Trial Burn #1: Afterburner (Exhaust Duct Temperature)	5-119
5-4	Cumulative Percent vs. Diameter	5-120
5-5	Differential Mass Distribution	5-121
5-6	Cumulative Concentration vs. Diameter	5-122

LIST OF ACRONYMS

ACAMS	-	Automatic Continuous Air Monitoring System
ASC	-	Allowable Stack Concentration
BIF	-	Boiler and Industrial Furnace Regulations
CAMDS	-	Chemical Agent Munitions Disposal System
CEMS	-	Continuous Emission Monitor System
DAAMS	-	Depot Area Air Monitoring System
DFS	-	Deactivation Furnace System
DOT	-	Department of Transportation
DRE	-	Destruction and Removal Efficiency
DS	-	Decontamination Solution
DUN	-	Dunnage Incinerator
EPA	-	Environmental Protection Agency
FPD	-	Flame Photometric Detector
GB	-	Nerve Agent
GC	-	Gas Chromatograph
GC/MS	-	Gas Chromatograph/Mass Spectrometry
GPD	-	Gas Plasma Display
HD	-	Mustard Agent
HRGC/HRMS	-	High Resolution Gas Chromatography/High Resolution Mass Spectrometry
ICP	-	Inductively Coupled Plasma Atomic-Emission Spectrometry
in. w.c.	-	inches of water column
JACADS	-	Johnston Atoll Chemical Agent Disposal System
LIC	-	Liquid Incinerator System
LOQ	-	Limit of Quantification

LIST OF ACRONYMS (cont'd)

M5AT	-	Method 5 Acid Train
MDB	-	Munitions Demilitarization Building
MM5	-	Modified Method 5
MMT	-	Multiple Metals Train
MPF	-	Metal Parts Furnace
MS	-	Mass Spectrometry
MS	-	Matrix Spike
MSD	-	Matrix Spike Duplicate
NBS	-	National Bureau of Standards
OVT	-	Operational Verification Test(ing)
PAS	-	Pollution Abatement System
PCDD/Fs	-	Polychlorinated dibenzo-p-dioxins and Polychlorinated dibenzo furans
PDAR	-	Process Data Acquisition and Recording
PICs	-	Products of Incomplete Combustion
PMCD	-	Program Manager for Chemical Demilitarization
POHC	-	Principal Organic Hazardous Constituent
QA	-	Quality Assurance
QC	-	Quality Control
RCRA	-	Resource Conservation and Recovery Act
RE&C	-	Raytheon Engineers & Constructors
SDS	-	Spent Decontamination Solution
SRI	-	Southern Research Institute
SVOC	-	Semivolatile Organic Compound
SwRI	-	Southwest Research Institute

LIST OF ACRONYMS (cont'd)

T/C	-	Tenax/Charcoal
TCDD/F	-	Tetrachlorodibenzodioxin/furan
TCLP	-	Toxicity Characteristic Leachate Procedure
TE	-	Toxicity Equivalent
THC	-	Total Hydrocarbons
TSCA	-	Toxic Substance Control Act
VOA	-	Volatile Organic Analysis
VOC	-	Volatile Organic Compound
VOST	-	Volatile Organic Sampling Train
VX	-	Nerve Agent
XAD-2	-	A Resin Used in Sampling

RESULTS OF THE JOHNSTON ATOLL CHEMICAL AGENT DISPOSAL SYSTEM DUNNAGE INCINERATOR TRIAL BURN

1.0 INTRODUCTION

1.1 PURPOSE OF THE TEST PROGRAM

Under Congressional mandate, the Department of the Army must dispose of existing stocks of chemical warfare agents and munitions. To implement this directive, the Army plans to construct eight munitions demilitarization facilities at exiting munitions storage depots in the United States. Locating these facilities at existing depot sites will minimize shipping and reduce the potential for mishap.

The first fully integrated demilitarization facility, the Johnston Atoll Chemical Agent Disposal System (JACADS), was constructed at Johnston Atoll in the Pacific. JACADS was constructed for the full-scale demilitarization of chemical munitions and decontamination of storage containers containing nerve agents (GB and VX) and mustard agents (H and HD). The JACADS combustion facilities consist of:

- the Liquid Incinerator System (LIC), used to burn liquid chemical agents and spent decontamination solution;
- the Deactivation Furnace System (DFS) for processing rockets and destroying energetic materials;
- the Metal Parts Furnace (MPF) for decontaminating drained storage containers, bombs and projectiles (explosive materials removed);
- the Dunnage Incinerator (DUN), for processing material, such as cardboard boxes and wooden pallets, related to munitions shipment.

The Army has scheduled operational verification testing (OVT) at the JACADS facility. The completion of the OVT at Johnston Atoll is pivotal because, by Congressional Order, no chemical-agent disposal may be conducted at any storage facility except the Chemical Agent Munitions Disposal System (CAMDS) located at Tooele Army Depot in Tooele, Utah, until the completion of the performance evaluation at Johnston Atoll.

To complete all the requirements of the OVT, one trial burn, consisting of four test runs, was performed on the DUN at JACADS beginning December 5, 1994 and ending December 8, 1994. Cardboard boxes containing 260 pounds of wood dunnage along with polyethylene carboys having a known quantity (10.3 pounds) of nerve agent GB absorbed in cellulose were used as the feed material. This trial burn was conducted to demonstrate compliance with the Resource Conservation and Recovery Act (RCRA) during the incineration of intentionally contaminated dunnage material in the DUN. This document reports the results of the DUN trial burn. This report was prepared by Raytheon Engineers and Constructors, Inc. (RE&C) for the Program Manager for Chemical Demilitarization (PMCD). The stack sampling described here was carried out by METCO Environmental under Subcontract to Southern Research Institute (SRI). The sample analysis was done by SRI under subcontract to RE&C as a part of its prime contract (DACA87-86-C-0098) with PMCD.

Throughout these tests, the DUN was evaluated against RCRA-specified performance standards for hazardous waste incinerators. These system-performance criteria pertain to the destruction and removal efficiency (DRE) of the principal organic hazardous constituent (POHC); emissions from the exhaust stack of particulate matter, carbon monoxide, and HCl gas; and various parameters relating to the DUN operation. The pertinent criteria may be summarized as follows:

- The DRE of chemical agent must be 99.99% or greater.
- Particulate emissions from the exhaust stack must not exceed 180 mg/dscm (0.08 gr/dscf) when corrected to 7% oxygen in the exhaust gas.
- The one hour rolling average concentration of carbon monoxide in the stack gas (corrected to 7% oxygen) must be less than 100 ppm and the peak concentration, for five minutes, must not exceed 200 ppm (also corrected to 7% oxygen).
- The removal of HCl from the exhaust gas by the Pollution Abatement System (PAS) must be 99% or greater, or the HCl emission rate must be less than 4 lb/hr.

Permit conditions require agent concentration in the stack to be below the Allowable Stack Concentration (ASC), equal to 0.0003 mg/m^3, and U.S. Army regulations require that no detectable agent be released to the atmosphere. In addition, the following were carried out:

- Monitor the DUN exhaust-stack emissions for:
  - O_2 (oxygen)
  - CO_2 (carbon dioxide)
  - Volatile and semivolatile products of incomplete combustion (PICs)
  - Polychlorinated dibenzo-p-dioxins and dibenzofurans (PCDD/Fs)
  - Trace Metals
  - Particulate breakthrough
  - Particulate size distribution
  - Total Hydrocarbons
  - NO_x
  - SO_x
  - HF
- Analyze the incinerator liquid process samples for:
  - Agent GB
  - Volatile and semivolatile PICs
  - PCDD/Fs
  - pH
  - Trace Metals
  - Reactivity
- Analyze the solid residue samples for:
  - Agent GB
  - Trace Metals
  - Volatile and semivolatile PICs
  - PCDD/Fs
  - Reactivity

1.2 SCOPE OF THIS REPORT

This report presents the test procedures and results for the GB Trial Burn (i.e., four test runs) in the DUN at JACADS, as well as the findings from the concomitant evaluation of the associated PAS performance.

1.3 TRIAL BURN TEAM

The sampling team included sampling coordinators, a chemist and sampling crew from SRI/METCO. The sample analyses for organics and inorganics were performed by SRI in their Birmingham, Alabama laboratory. METCO Environmental was a subcontractor to SRI to perform some of the field activities and acid analysis. Observers were present from the Environmental Protection Agency (EPA), PMCD, Southwest Research Institute (SwRI) and Raytheon Engineers & Constructors, Inc. (RE&C).

2.0 SUMMARY OF DATA

A summary of the Dunnage Incinerator (DUN) system performance relative to Resource Conservation and Recovery Act (RCRA) criteria is presented in Table 2-1.

The emissions from the stack were monitored for GB vapor, the designated principal organic hazardous constituent (POHC), utilizing the automatic continuous air monitoring system (ACAMS). The ACAMS is an automatic gas chromatograph that is designed to analyze the chemical agents GB, VX or HD. The ACAMS is capable of detecting and quantifying chemical agent concentrations at approximately 20% of the Allowable Stack Concentration (ASC). GB was not detected during any of the four test runs. For this reason, the destruction and removal efficiency (DRE) was calculated using the ACAMS limit of quantification (LOQ). Thus, wherever a DRE appears, it is expressed as a greater than number. The DRE for GB in the DUN ranged from >99.9999868% to >99.9999870%. These values are well above the RCRA DRE requirement of 99.99%.

In addition to the stack, the DUN furnace room ventilation air exhaust was monitored for GB vapor. None was detected. The Quench Tower Emergency Exhaust was also monitored. However, since no emergency venting occurred during the tests, no exhaust and consequently no GB were emitted through the quench tower exhaust.

Particulate matter emissions, corrected to 7% O_2, in the stack ranged from 2.31 to 4.85 mg/dscm based on Method 5 Acid Train (M5AT) data and from 3.21 to 28.70 mg/dscm based on the Multiple Metals Train (MMT) data. It should be noted that the high concentration of 28.70 mg/dscm was due to the initiation of baghouse pulse jet cleaning during Test Run 4. The average of the M5AT and MMT particulate matter concentrations ranged from 3.06 to 16.00 mg/dscm. These concentrations are less than 9% of the 180 mg/dscm allowed.

HCl was detected in the stack gas at 0.59 to 0.72 lb/hr. This is less than 20% of the 4.0 lb/hr limit.

The secondary chamber exhaust CO concentration (corrected to 7% O_2) hourly rolling average ranged from a minimum of 32.1 ppm to a maximum of 46.1 ppm. The five minute average ranged from a minimum of 30.4 ppm to a maximum of 62.2 ppm. These values are less than 50% of the allowable limits of 100 and 200 ppm, respectively. They demonstrate good combustion efficiency with low products of incomplete combustion (PICs).

Summarizing the above results:

	TR #1	TR #2	TR #3	TR #4
DRE - GB, %	>99.9999868	>99.9999868	>99.9999869	>99.9999870
Particulates, mg/dscm*	4.20	3.53	3.06	16.00
HCl, lb/hr	0.59	0.63	0.68	0.72
Average CO, ppm* (Hourly rolling average)	34.7	42.7	43.1	40.4

	TR #1	TR #2	TR #3	TR #4
Average CO, ppm* (5 min average)	34.5	42.5	42.9	40.1

* corrected to 7% oxygen in flue gas

2.1 STEADY STATE OPERATING CONDITIONS

The Johnston Atoll Chemical Agent Disposal System (JACADS) RCRA Part B permit requires that the furnace operate at steady state conditions prior to the introduction of each charge of dunnage. Based on a review of the process data acquisition and recording (PDAR) system data, the furnace was operating at steady state conditions.

The range of exhaust gas temperatures from the Primary Chamber during the four hour test runs was between 1351°F and 1968°F as shown in Table 2-1. The secondary chamber exhaust gas temperature during the test runs was between 1881°F and 2043°F. These primary and secondary chamber temperatures are well within the required range of 1200-2100°F and 1800-2200°F, respectively.

2.2 DESTRUCTION OF CHEMICAL AGENT

During performance of all four test runs, no agent was detected by the ACAMS monitoring system. The sensitivity (LOQ) of the GB monitoring system, i.e., the ACAMS, was one fifth of the ASC (0.0003 mg/m^3) for GB in all four test runs. Based on this level of capability, the actual level of GB that might not have been detected was below 0.00006 mg/m^3.

2.3 PARTICULATE EMISSIONS

Data from the M5AT and MMT were used to calculate particulate matter emissions.

Particulate matter concentrations (corrected to 7% O_2) in the four DUN test runs were, respectively, 4.85, 3.85, 2.31 and 3.29 mg/dscm from the M5AT results and 3.55, 3.21, 3.81 and 28.7 mg/dscm from the MMT results. Hence, the DUN particulate matter emissions were well below the RCRA particulate limit of 180 mg/dscm at an oxygen content of 7% in the stack. The particulate concentrations after correction of the data to 12% CO_2 (not a RCRA requirement) were 5.54, 4.36, 2.66 and 3.77 mg/dscm from the M5AT and 4.03, 3.64, 4.36 and 33.1 mg/dscm from the MMT.

The particle size distribution, measured as a composite of test runs 2, 3 and 4, showed that the mass median diameter was approximately 6 μm. The low particulate concentrations in the stack gases precluded making individual measurements for each test run.

2.4 HCl EMISSIONS

HCl was detected in the stack gas during each of the four test runs. The emission rates ranged from 0.59 to 0.72 lb/hr. The allowable limit for HCl emission is 4 lb/hr or 99% removal, whichever is greater. Thus, the HCl emission rate for each test run was less than 20% of the allowable limit.

2.5 HF EMISSIONS

GB is an organic compound which includes fluorine. As expected, HF was detected in the stack gas during each of the four test runs. The emission rates ranged from 0.59 to 0.74 lb/hr. There are no RCRA hazardous waste incinerator performance standards for HF emissions.

2.6 CARBON MONOXIDE

CO is measured just downstream of the secondary chamber. It is regulated by the RCRA permit. The hourly rolling average is limited to below 100 ppm (corrected to 7% O_2) with peaks of 200 ppm of less than five minutes duration allowed.

The post secondary chamber CO concentration averaged over each four hour test run ranged from 34.6 to 43.0 ppm. The PDAR data shows that for all four test runs, the CO concentration was consistently less than 50 ppm. Maintaining a consistently low CO concentration is an indication of system control and good combustion efficiency.

2.7 METALS

2.7.1 Analysis of Liquid Process Samples for Metals

Selected pre and post test process samples of the quench liquid, process water, and fuel oil samples were analyzed for the eight RCRA Toxicity Characteristic Leachate Procedure (TCLP) metals (arsenic, barium, cadmium, chromium, mercury, selenium, silver, lead) and for ten additional metals (manganese, beryllium, tin, antimony, zinc, cobalt, nickel, vanadium, copper, thallium).

As shown in Table 2-2, all of the TCLP metals in the quench liquid and process water were below the regulatory limit. One sample of Test Run 1 post test fuel oil contained selenium slightly above the regulatory limit.

Table 2-2 also lists the non-TCLP metals which were found in quantifiable concentrations. Presently there are no federal regulatory limits applicable to the concentration of the non-TCLP metals from this matrix. They were included in the analyses to more completely characterize the system and to provide data which could potentially apply to Continental United States (CONUS) siting and/or future regulations.

2.7.2 Stack Emissions of Metals

MMT samples were tested for 18 metals including all eight of the RCRA characteristic TCLP metals. Twelve metals were found in one or more of the samples. In some cases, these metals were also found in the blanks. (Seven of the twelve metals, barium, chromium, copper, manganese, nickel, tin and zinc, were present in all four test runs. Data for Test Run 4 indicates metals concentration in the stack significantly higher than the other three test runs. This is because of initiation of air pulsing in the baghouse. It resulted in a higher particulate catch which computes to higher metal concentration.

Table 2-3 lists the results of metals in stack exhaust gas for which a quantifiable amount was found.

2.7.3 Ash Leachate

Composite leachate samples were made from the furnace ash and from the baghouse ash. Table 2-4 provides the results of the TCLP analyses of the ash samples. Analyses were performed for the eight TCLP metals as well as ten additional metals. With the exception of barium, the remaining seven TCLP metals exceeded RCRA standards in the baghouse ash. Four of the seven metals in the furnace ash exceeded the regulatory standards. Manganese, zinc, nickel, copper and chromium were present in high concentrations relative to other metals.

2.8 PRODUCTS OF INCOMPLETE COMBUSTION

The MM5 train, fuel oil, ash and process samples were analyzed for the presence of volatile and semivolatile PICs. There is no regulatory limit with which to compare these results.

Table 2-5 presents the results for stack emissions of semivolatile PICs.

Table 2-6 presents the results for stack emissions of volatile PICs.

Results for the fuel oil, process samples and ash are discussed in Sections 5.3 and 5.5 of this report.

2.9 DIOXIN/FURAN EMISSIONS

The stack gas, process samples, ash and fuel oil were sampled for the presence of polychlorinated dibenzo-p-dioxins/polychlorinated dibenzo furans (PCDD/Fs).

Most dioxins were detected in the stack at levels above the blank samples, but near the detection limits. These are summarized in Table 2-7.

The maximum total 2,3,7,8-TCDD Toxicity Equivalent concentration was 0.128 ng/dscm, during Test Run 4.

As a comparison, previous studies of municipal incinerators have demonstrated emissions of dioxins in the range of 50-7000 ng/dscm.

2.10 TOTAL HYDROCARBONS

Total hydrocarbons (THC) in the stack gas were determined by EPA Method 25A. The results are presented in Table 2-8.

This data was taken to characterize the emissions.

2.11 QUALITY ASSURANCE/QUALITY CONTROL

Assuring valid results in a sampling and analysis program of the type carried out during the DUN Trial Burn requires that a thorough quality assurance/quality control (QA/QC) program be followed. Such a QA/QC program was followed for all sampling and laboratory functions for this trial burn.

Typical procedures followed, as appropriate for each sample, included:

- instrument and sampling system calibrations
- initial and continuing instrument calibration verifications
- sample preservation and identification
- replicate samples and analyses
- analysis of blank samples, matrix spikes and surrogates
- maintaining complete chain of custody documentation for all samples

A more detailed discussion of the QA/QC program, as it relates to each type of sample, is found in Section 6 of this report.

TABLE 2-1

SUMMARY OF SYSTEM TEST CONDITIONS AND RESULTS

Parameter	Units	TR1	TR2	TR3	TR4	Requirement
GB Feed Rate	lbs/hr	10.3	10.3	10.3	10.3	10.3
GB Concentration	mg/m^3	ND[a]	ND	ND	ND	<0.0003
Min/Max Exhaust Gas Temperature Primary Chamber Afterburner	 °F °F	 1377/1899 1895/2041	 1401/1905 1900/2043	 1351/1968 1884/2043	 1387/1956 1881/2043	 1200-2100 1800-2200
DRE - GB	%	>99.9999868	>99.9999868	>99.9999869	>99.9999870	≥99.99
Particulate Matter[b] Corrected to 7% O_2 Corrected to 12% CO_2	 mg/dscm mg/dscm	 4.20 4.79	 3.53 4.00	 3.06 3.51	 16.00 18.46	 <180 -
Stack Gas Flow[b]	acfm dscfm	6029 2918	6046 2870	6001 2805	5953 2870	
HCl Emissions	lb/hr	0.59	0.63	0.68	0.72	<4
Oxygen[c]	%	10.9	11.2	11.3	11.4	8-14%
Carbon Dioxide[c]	%	7.6	7.5	7.3	7.2	
Carbon Monoxide[d]	ppm	34.7	42.7	43.1	40.4	≤100 ppm hourly avg.
Carbon Monoxide[e]	ppm	34.5	42.5	42.9	40.1	≤200 ppm 5 min.

[a]ND = Not detected; Limit of Quantification <0.00006 for Test Runs 1-4.
[b]Average of M5AT and MMT results.
[c]Orsat values (at the stack).
[d]Afterburner CO concentration (corrected to 7% O_2 on a dry basis) averaged over 1 hour.
[e]Afterburner CO concentration (corrected to 7% O_2 on a dry basis) averaged over 5 minutes.

DUNGB2.W51 327

TABLE 2-2

METAL ANALYSES OF QUENCH LIQUIDS, PROCESS WATER AND FUEL OIL
(mg/L)

	TR1	TR2	TR3	TR4	Regulatory Limit
	METALS FOUND IN QUANTIFIABLE CONCENTRATIONS				
Quench Liquid Pre-Test					
Cadmium	<0.01	0.01	0.01	0.01	1.0
Chromium	<0.01	<0.01	0.06	<0.06	5.0
Quench Liquid Post-Test					
Barium	0.03	<0.03	<0.03	<0.03	100.0
Cadmium	0.02	0.01	0.03	0.05	1.0
Chromium	0.07	0.02	0.01	<0.01	5.0
Process Water Pre-Test	-	-	ND[a]	ND[a]	
Process Water Post-Test					
Mercury	-	-	0.002	<0.01	0.2
Fuel Oil Pre-Test					
Chromium[b]	<1.00	0.98	<1.00	1.52	5.0
Fuel Oil Post-Test					
Chromium[b]	<1.00	<1.00	1.10	<1.00	5.0
Selenium[b]	6.88	<5.00	<5.00	<5.00	1.0
Quench Liquid Pre-Test					
Copper	0.05	0.58	0.05	0.05	
Manganese	2.00	2.24	2.16	2.44	
Nickel	0.18	0.24	0.18	0.48	
Zinc	0.18	0.25	0.21	0.24	
Quench Liquid Post-Test					
Cobalt	0.07	0.04	0.05	0.06	
Copper	0.39	0.23	0.33	0.26	
Manganese	4.97	3.26	4.97	6.31	
Nickel	1.68	0.96	0.98	0.93	
Vanadium	0.02	0.02	0.05	0.03	
Zinc	1.11	0.74	1.07	1.40	
Process Water Pre-Test					
Tin	-	-	<0.03	0.03	
Process Water Post-Test	-	-	ND[a]	ND[a]	
Fuel Oil Pre-Test					
Antimony[b]	5.68	<5.00	<5.00	6.96	
Tin[b]	4.04	3.30	2.29	6.14	
Fuel Oil Post-Test					
Antimony[b]	8.79	<5.00	<5.00	<5.00	
Tin[b]	8.50	1.13	1.20	2.06	

[a]Not Detected
[b]Units in $\mu g/g$

TABLE 2-3

STACK GAS METALS CONCENTRATIONS[a]
(μg/dscm)

	TR1	TR2	TR3	TR4
Antimony	ND[b]	ND	ND	ND
Arsenic	ND	ND	ND	ND
Barium	5.7	6.4	6.9	6.7
Beryllium	ND	ND	0.01	0.006
Cadmium	6.5	0.4	ND	4.6
Chromium	11.3	7.1	7.3	35
Cobalt	ND	ND	ND	2.8
Copper	12.5	5.0	1.1	32
Lead	ND	58	ND	5.0
Manganese	31	18	27	231
Mercury	0.46	0.32	0.61	0.63
Nickel	5.1	4.0	4.0	54
Selenium	ND	ND	ND	ND
Silver	ND	ND	ND	ND
Thallium	ND	ND	ND	ND
Tin	4.5	5.2	29	47
Vanadium	ND	ND	0.8	4.4
Zinc	12	16	7.5	488

[a]Values blank corrected based on field blanks
[b]ND = Not detected. Detection limits are listed below:

TR1: 3.2 μg/dscm for Antimony, Arsenic, Lead, Selenium, Silver
0.32 μg/dscm for Beryllium
1.3 μg/dscm for Cobalt
0.63 μg/dscm for Vanadium, Thallium

TR2: 2.8 μg/dscm for Antimony, Arsenic, Selenium, Silver
0.28 μg/dscm for Beryllium
1.1 μg/dscm for Cobalt
0.56 μg/dscm for Vanadium, Thallium

TR3: 2.7 μg/dscm for Antimony, Arsenic, Lead, Selenium, Silver
1.1 μg/dscm for Cobalt
0.54 μg/dscm for Thallium

TR4: 2.8 μg/dscm for Antimony, Arsenic, Selenium, Silver
0.56 μg/dscm for Thallium

TABLE 2-4

METAL ANALYSES OF COMPOSITE[a] ASH SAMPLES
($\mu g/g$)

Metals	Furnace Ash	Baghouse Ash	Regulatory Limit[b]
Antimony	35.9	12.2	NA
Arsenic	35.2	33.9	5.0
Barium	1.50	43.5	100.0
Beryllium	0.63	<0.50	NA
Cadmium	7.55	52.3	1.0
Chromium	3.87	323	5.0
Cobalt	19.6	41.0	NA
Copper	159	300	NA
Lead	33.5	1112	5.0
Manganese	6433	2608	NA
Mercury	<0.50	<0.50	0.2
Nickel	563	554	NA
Selenium	160	245	1.0
Silver	<5.00	28.3	5.0
Thallium	<1.00	<1.00	NA
Tin	9.80	192	NA
Vanadium	33.4	24.1	NA
Zinc	318	9919	NA

[a]Composite samples of all four test runs collected at end of trial burn.
[b]TCLP limits from 40CFR § 261.24

TABLE 2-5

STACK GAS SEMIVOLATILE PRODUCTS OF INCOMPLETE COMBUSTION[a]
(μg/dscm)

	TR1	TR2	TR3	TR4
Benzoic Acid	28	ND[b]	18	33
Bis (2-ethylhexyl) phthalate	7.5	4.7	ND	ND

[a]Values corrected using blank train results.
[b]ND = Not detected. Detection limits (averaged for all four test runs) are listed below:
3.9 μg/dscm for Benzoic Acid
2.6 μg/dscm for Bis (2-ethylhexyl) phthalate

TABLE 2-6

STACK GAS VOLATILE PRODUCTS OF INCOMPLETE COMBUSTION[a]
(μg/dscm)

	TR1	TR2	TR3	TR4
Acetone	162	124	51	75
Methylene Chloride	0.36	ND[b]	ND	0.10
2-Butanone	0.68	3.7	ND	2.1
Chloroform	1.79	0.46	1.06	0.14
Benzene	208	252	95	120
Toluene	15	23	6.8	4.6
1,1,2 Trichloroethene	ND	ND	ND	0.28
Dibromochloromethane	0.24	ND	ND	ND
Bromoform	0.24	0.59	0.95	0.28

[a]Values blank corrected.
[b]ND = Not detected. Detection limits (averaged for all four test runs) are listed below:
0.06 μg/dscm for methylene chloride
0.26 μg/dscm for 2-butanone
0.06 μg/dscm for 1,1,2 trichloroethene
0.06 μg/dscm for dibromochloromethane

TABLE 2-7

STACK GAS ANALYSIS FOR DIOXINS AND FURANS[a]
(ng/dscm)

		TR1	TR2	TR3	TR4
PCDD/PCDF	TCDF	1.047	0.780	0.647	0.701
	TCDD	0.968	0.706	0.760	0.838
	PeCDF	1.031	0.734	0.406	1.166
	PeCDD	0.349	0.537	0.519	0.877
	HxCDD	1.713	1.888	1.791	2.860
	HxCDF	0.786	0.680	0.544	1.005
	HpCDF	0.443	0.423	0.330	0.064
	HpCDD	0.770	1.047	0.991	0.953
	OCDF	ND	0.044	0.047	0.037
	OCDD	0.138	0.126	ND	0.144
TOTAL[c] (2,3,7,8-TCDD Toxicity Equivalent)		0.121	0.128	0.106	0.067

[a]Values blank corrected.
[b]ND = Not detected. Detection limits are:
TR1: 0.063 ng/dscm for OCDF
TR3: 0.044 ng/dscm for OCDD
[c]Values corrected for Toxicity Equivalence Factors based on EPA Report 625/3-89/16.

TABLE 2-8

TOTAL HYDROCARBONS IN STACK GAS
(Expressed as Propane)

Test Run	Total (ppm)	Emission Rate (lb/hr)
1	8.5	0.16
2	8.5	0.17
3	5.0	0.10
4	9.0	0.18

3.0 FACILITY DESCRIPTION

3.1 THE JOHNSTON ATOLL CHEMICAL AGENT DISPOSAL SYSTEM (JACADS) FACILITY

The JACADS facility is located on Johnston Island, which is the largest of four largely man-made islands comprising the Johnston Atoll, located in the central Pacific Ocean. The nearest populated islands are the Hawaiian Islands which are more than 700 nautical miles to the northeast. The closest landfall is French Frigate Shoals (unpopulated) which is about 400 miles north. Figure 3-1 shows the location of Johnston Atoll. Johnston Island, as shown in Figure 3-2, is roughly rectangular in shape and measures about two miles long and one-half mile wide.

Chemical agent munitions, including rockets, mines, projectiles, bombs and bulk agent ton containers are stored in bunkers located on the southwestern part of Johnston Island. This area, called the Red Hat Area, is under 24-hour electronic surveillance and armed security guard by the US Army.

The JACADS facility is situated immediately adjacent to the Red Hat Area minimizing the distance munitions are transported. Once inside the munitions demilitarization building (MDB) all normal munition handling is by conveyor and robotics, thereby reducing potential personnel exposure.

All systems and facilities are provided with a cascading ventilation system, which draws air inward from areas of lowest potential contamination to areas of greater potential contamination. All ventilation air is eventually used as combustion air or exhausted through charcoal filters. Thus, atmospheric contamination is prevented.

The JACADS demilitarization process is based on the thermal destruction of toxic agents utilizing two-stage high temperature incinerators. The process consists of draining the liquid chemical agent from the storage/munition system followed by destruction of the agent, deactivation of explosives, and thermal decontamination of the drained parts in the following incinerator systems:

1. The Deactivation Furnace System (DFS) processes drained rockets including the fiberglass shipping and firing (S/F) tubes, energetic materials such as propellant, fuses and bursters, and any residual agent.

2. The Liquid Incinerator System (LIC) processes liquid chemical agent drained from the storage/munition system and Spent Decontamination Solution (SDS). The SDS results from cleanup operations to reduce the level of chemical agent present in an area or item.

3. The Metal Parts Furnace (MPF) processes drained metal ton containers, bombs and projectiles; and residual agent contained therein.

The JACADS facility also includes the Dunnage Incinerator (DUN) which processes the dunnage related to munition shipment such as wooden pallets.

Flue gases from the DFS, the MPF, and the LIC are each scrubbed by a dedicated wet pollution abatement system (PAS). The DUN has a separate flue gas cleaning system. The scrubber liquid from the wet scrubbers is fed to dryers to reduce the brine to a dry salt.

3.2 DUN DESCRIPTION

The DUN is a refractory-lined, two chamber furnace designed to incinerate dunnage and other potentially contaminated miscellaneous materials on a batch basis. The principal components of the DUN system are: the primary chamber, the secondary chamber (afterburner) and the PAS. The solid wastes are charged into the DUN primary chamber through an airlock, utilizing a lift car and a ram feeder. Figure 3-3 is a schematic diagram of the DUN incinerator and pollution abatement system.

The DUN primary chamber is fired with JP-5 fuel oil and brought to a temperature of approximately 1275°F before charging a load of dunnage. Only two of four burners are operating before feeding the dunnage. As the box of dunnage ignites, the chamber experiences a rapid temperature increase. At the same time, the oxygen level decreases and carbon monoxide increases. The temperature drops and levels out as the cardboard box is consumed and the wooden dunnage begins to burn. Fuel oil flow is automatically adjusted to maintain temperature in the furnace.

Exhaust gas from the primary chamber passes to the secondary chamber, which is also fired with JP-5 fuel oil. The gases are heated to 2000°F and maintained at this temperature for at least two seconds before discharging to the PAS.

Process parameters measured at the primary and secondary chambers are:

- Fuel Oil Flow to Each Chamber
- Combustion Air to Each Chamber
- Primary and Secondary Chamber Temperatures
- Primary and Secondary Chamber Pressures
- Oxygen in the Primary and Secondary Chamber Exhaust Gas
- Carbon Monoxide in the Secondary Chamber Exhaust Gas
- Secondary Chamber Exhaust Temperature

A general description of the PAS subsystems and their functions are provided below:

a. The quench tower cools the exhaust gases from the afterburner before they enter the baghouse. Process water is sprayed in the quench tower to cool the gas as required and protect the fabric filter bags in the baghouse downstream. The quench spray also scrubs particulates from the gas stream. A portion of the water spray evaporates to cool the gases; the remainder drains to a collection tank from which it is pumped through strainers and recirculated to the quench tower spray nozzles. The quench tower is monitored for:

   - Water Flow Rate
   - Inlet-Gas Temperature
   - Outlet-Gas Temperature

b. The baghouse removes additional particulates from the gas stream by forcing the gas to flow through the fabric filter bags. The gas passes through, but particulates are retained on the bag surface. The ash is periodically removed by pulsing the bags and is dropped into a collection hopper at the bottom of the baghouse. The pressure drop across the baghouse is monitored.

c. The induced-draft fan moves the exhaust gases through the PAS. Dampers control the flow to maintain the required negative pressure in the DUN.

d. A 100-ft stack serves to exhaust the clean gases to the atmosphere. The stack parameters that are monitored continuously are NO_x, SO_2, and the chemical-agent concentration, which is monitored by ACAMS/DAAMS.

3.3 FEED FOR THE TRIAL BURN

To replicate operating conditions as closely as possible, cardboard boxes filled with 260 pounds of wooden dunnage were used as the waste feed. During normal operation, some dunnage may potentially be contaminated with agent due to leaking munitions. The quantity of agent in the contaminated waste is very small and difficult to estimate. To simulate agent contaminated dunnage while simultaneously being able to measure the input quantity (required to calculate DRE), each load was "spiked" by adding containers filled with 10.3 pounds of Agent GB soaked in cellulose.

Agent GB (nerve agent), is a reactive (hazardous) compound and was designated the principal organic hazardous constituent (POHC) for this test.

The chemical name for GB is Isopropyl methylphosphonofluoridate. Its chemical formula is $C_4H_{10}FO_2P$. Its molecular weight is 140.1 and its specific gravity is 1.09 (liquid) relative to water at 20°C and 4.86 (vapor) relative to air. It has a specific heat of 0.416 Btu/lb°F, a boiling point of 316°F, a heat of combustion of 10,073 Btu/lb and is non-flammable.

3.4 SAMPLING REQUIREMENTS

A summary of the sampling requirements, methods and locations is given in Table 3-1. Table 3-2 provides details of the traverse points for the Modified Method 5 sampling for particulates, metals and HCl in the stack. Sample point locations on the stack are shown in Figure 3-4.

3.5 FACILITY INSTRUMENTATION

The JACADS DUN System includes several continuous emission monitors (CEMS) and a process data acquisition and recording (PDAR) system. Specifically, there are O_2 monitors in the exhaust of the primary chamber, and in the exhaust of the secondary chamber. A CO monitor is located in the secondary chamber exhaust. The CO concentrations in the secondary chamber exhaust are corrected to 7% oxygen and are shown as such on the control room consoles and in the PDAR data. Sulfur dioxide and nitrogen oxides are also monitored in the stack. ACAMS units are located at the DUN furnace room ventilation air exhaust duct, quench tower emergency exhaust and at the stack to provide agent-concentration data and rapid

warning of detectable agent in the flue gas. Table 3-3 provides a general summary of the CEM characteristics and specifications for the DUN.

Process data are logged by the PDAR system continuously throughout all operations of the JACADS facility. Data are taken at approximately 3-second intervals and averaged over a time span of 5 minutes. For each averaging period, the minimum, maximum, and average value of each process variable is logged.

TABLE 3-1

SAMPLING AND ANALYSIS REQUIREMENT FOR RCRA DUN TRIAL BURN

Sample	Matrix	Parameter	Analytical Method	Frequency	Location	JACADS Routine Equipment Rqmt. & Type
Ash	Solid (grab)	GB (POHC)	Extraction/GC[b]	1 sample at end of trial burn[f]	a. Combustion Chamber b. Baghouse	Hewlett-Packard GC-FPD
		TCLP Metals	EPA 6010/7470	1 sample at end of trial burn[f]	a. Combustion Chamber b. Baghouse	None
		Semi-VOCs	EPA 8270	1 sample at end of trial burn[f]	a. Combustion Chamber b. Baghouse	None
		PCDD/PCDF	EPA 8290	1 sample at end of trial burn[f]	a. Combustion Chamber b. Baghouse	None
		VOCs	EPA 8240	1 sample at end of trial burn[f]	a. Combustion Chamber b. Baghouse	None
		Reactivity	SW-846 (7.3)	1 sample at end of trial burn[f]	a. Combustion Chamber b. Baghouse	None

TABLE 3-1

SAMPLING AND ANALYSIS REQUIREMENT FOR RCRA DUN TRIAL BURN

Sample	Matrix	Parameter	Analytical Method	Frequency	Location	JACADS Routine Equipment Rqmt. & Type
Process Liquid	Liquid (grab)	GB (POHC)	Extraction/GC[b]	1 pre-test sample and 1 post-test sample	a. Fuel Oil b. Quench Tower Recirculation Line	None
		TCLP Metals	EPA 6010/7470	1 pre-test sample and 1 post-test sample	a. Fuel Oil b. Quench Tower Recirculation Line	None
		Semi-VOCs	EPA 8270	1 pre-test sample and 1 post-test sample	a. Fuel Oil b. Quench Tower Recirculation Line	None
		PCDD/PCDF	EPA 8290	1 pre-test sample and 1 post-test sample	a. Fuel Oil b. Quench Tower Recirculation Line	None
		VOCs	EPA 8240	1 pre-test sample and 1 post-test sample	a. Fuel Oil b. Quench Tower Recirculation Line	None
		Reactivity	SW-846 (7.3)	1 pre-test sample and 1 post-test sample	a. Fuel Oil b. Quench Tower Recirculation Line	None
		pH	EPA 9040	1 pre-test sample and 1 post-test sample	a. Fuel Oil b. Quench Tower Recirculation Line	None

TABLE 3-1

SAMPLING AND ANALYSIS REQUIREMENT FOR RCRA DUN TRIAL BURN

Sample	Matrix	Parameter	Analytical Method	Frequency	Location	JACADS Routine Equipment Rqmt. & Type
Process Water	Liquid (grab)	GB (POHC)	Extraction/GC[b]	1 pre-test sample and 1 post-test sample	Tap in Process Water Feed Line	None
		TCLP Metals	EPA 6010/7470	1 pre-test and 1 post-test sample	Tap in Process Water Feed Line	None
		Semi-VOCs	EPA 8270	1 pre-test and 1 post-test sample	Tap in Process Water Feed Line	None
		PCDD/PCDF	EPA 8290	1 pre-test and 1 post-test sample	Tap in Process Water Feed Line	None
		VOCs	EPA 8240	1 pre-test and 1 post-test sample	Tap in Process Water Feed Line	None
		Reactivity	SW-846 (7.3)	1 pre-test and 1 post-test sample	Tap in Process Water Feed Line	None
		pH	EPA 9040	1 pre-test and 1 post-test sample	Tap in Process Water Feed Line	None

TABLE 3-1

SAMPLING AND ANALYSIS REQUIREMENT FOR RCRA DUN TRIAL BURN

Sample	Matrix	Parameter	Analytical Method	Frequency	Location	JACADS Routine Equipment Rqmt. & Type
Exhaust Gas	Gas	CO	CEMS	Continuous	Between afterburner and quench[e]	Anarad, Model AR-50R
		THC	Method 25A	Continuous	DUN Stack	Total JUM Hydrocarbon Analyzer
		VOCs	VOST/8240	4-40 min. samples Slow VOST	DUN Stack	None
		Semi-VOCs	MM5/8270	1-4 hr. sample	DUN Stack	None
		PCDD/PCDF	MM5/8290	1-4 hr. sample	DUN Stack	None
		Metals/Particulate	SW-846 EPA-6010/7470	2 hr./sample 1 sample/test run	DUN stack	None
		NO_x	EPA Method 7E	Continuous	DUN Stack	Western Research Model 721AT2
		GB (POHC)	ACAMS[c] DAAMS[g]	Continuous While Sampling	DUN Stack[e]	ACAMS DAAMS
		O_2	CEMS	Continuous	a. Between combustion chamber & afterburner[e] b. Between afterburner & quench[e]	Thermox Model 4S
		Particulate/HCl/HF[e]	Method 0050/9057 (collection)	2 hr./sample 1 sample/test run	DUN stack	None

SAMPLING AND ANALYSIS REQUIREMENTS FOR RCRA DUN TRIAL BURN

FOOTNOTES:

a. Monitor located in the DUN stack monitoring house.

b. Sensitivity 20 ppb; accuracy ±25%; precision ±15% (See Attachment D-2).

c. Sensitivity approximately 0.00006 mg/m^3; accuracy ±25%; precision ±25%).

d. Metals include:

Antimony	Cadmium	Silver	Nickel	Cobalt
Arsenic	Chromium (Total)	Thallium	Vanadium	Manganese
Barium	Lead	Selenium	Copper	
Beryllium	Mercury	Tin	Zinc	

e. Particulate and HCl will be sampled using a common Modified Method 5 Acid Train.

f. Composite ash samples were taken from the primary incinerator chamber and from the baghouse, at the completion of the trial burn.

TABLE 3-2

LOCATION OF SAMPLING POINTS FOR
METHOD 5 & MODIFIED METHOD 5 ACID TRAINS,
MULTIPLE METALS TRAIN AND PARTICULATES

Point Number	Percent of Diameter from Wall	Distance from Wall, inches
1	4.4	1-9/16
2	14.6	5-3/16
3	29.6	10-1/2
4	70.4	25
5	85.4	30-5/16
6	95.6	33-15/16

The sampling ports are located 30 feet 6 inches (10.31 stack diameters) downstream from a constriction in the stack and 31 feet 2 inches (10.54 stack diameters) upstream from the outlet of the stack.

Inside Stack Diameter = 35 1/2 inches

TABLE 3-3

FACILITIES EMISSIONS MONITORING INSTRUMENTATION

Parameter	Model & Type of Instrument	Sampling Locations	Design Range	Operating Range	Accuracy	Precision
Oxygen	Thermox Model LS Electrochemical Analyzer	• Primary Outlet • Afterburner Outlet	0 to 25% Oxygen in Exhaust Gases	0 to 25% Oxygen in Exhaust Gases	0.1%	0.5%
Carbon Monoxide	Anarad Mode AR-50R NDIR	• Afterburner Exhaust	0 to 500 ppm in Exhaust Gases	0 to 500 ppm in Exhaust Gases	±1% of full scale	±1% of full scale
GB	ACAMS Gas Chromatography	• Exhaust Stack • Quench Emergency Exhaust • Room Ventilation Exhaust Duct	0 to 0.3 mg/m^3	to ASC (0.0003 mg/m^3)	±25%	±25%
NO_x	Teco Model 44 Chemiluminescent	Exhaust Stack	0 to 500 ppm	o to 500 ppm	±1%	±1%
SO_2	Western Research Model 721AT2	Exhaust Stack	0 to 500 ppm in Exhaust Gases	0 to 500 ppm	±0.5%	±0.5%

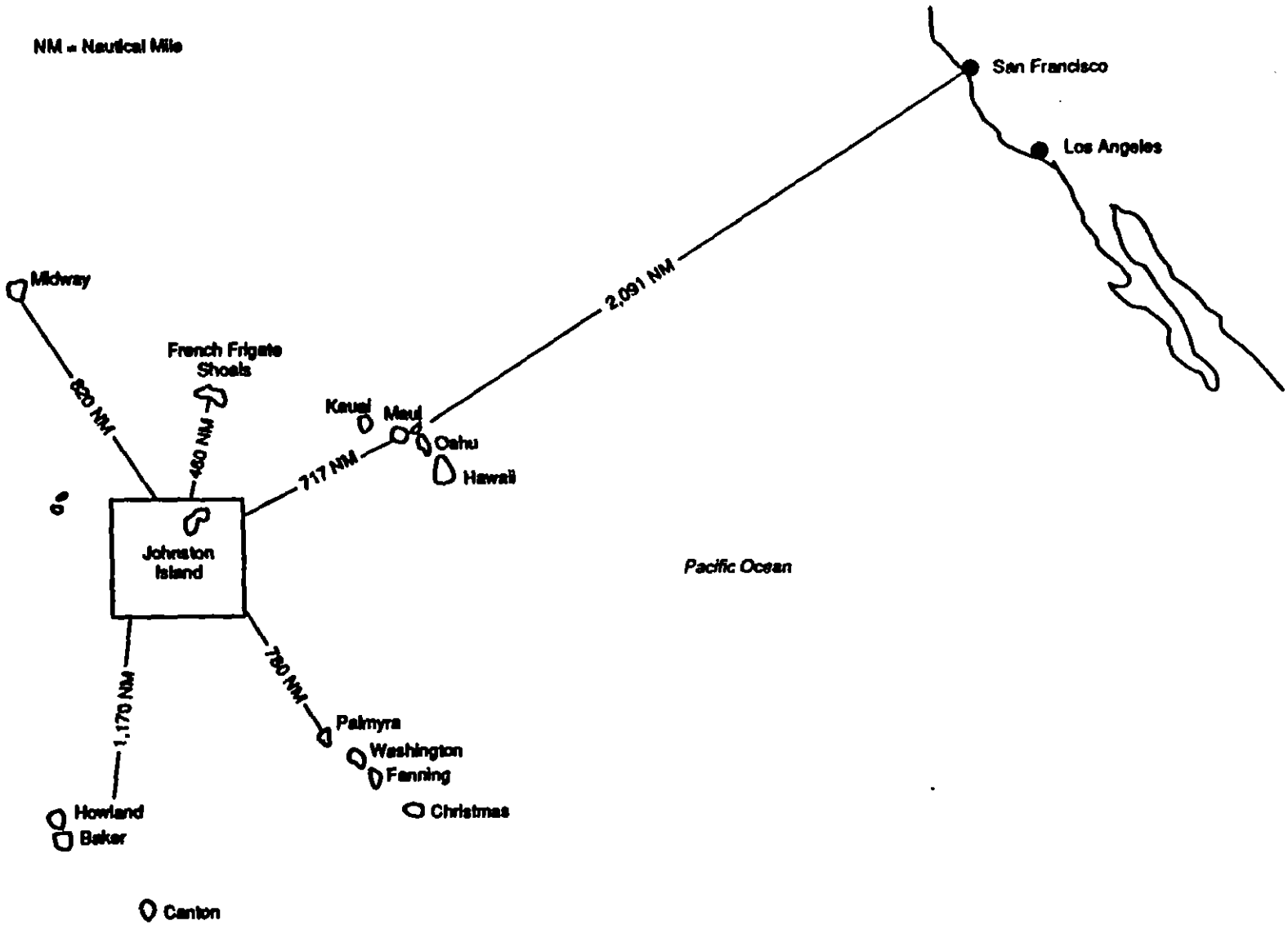

FIGURE 3-1

LOCATION OF JOHNSTON ISLAND

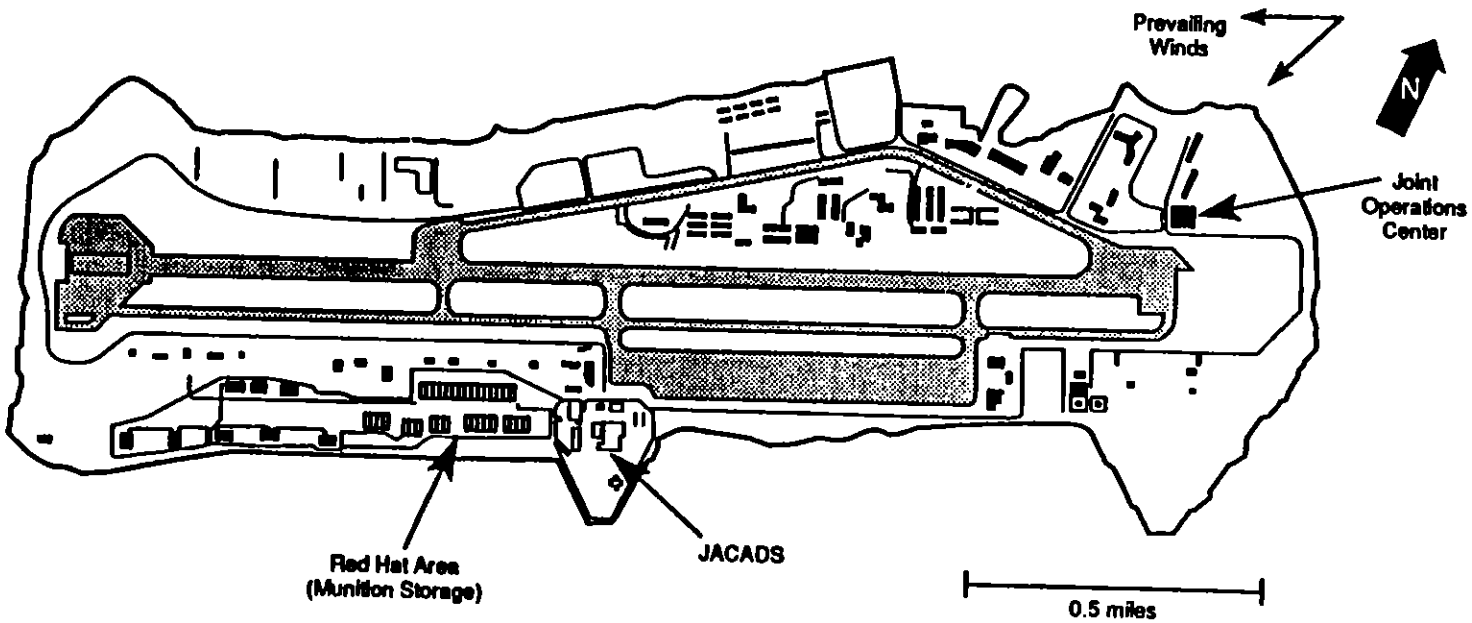

FIGURE 3-2

JOHNSTON ISLAND

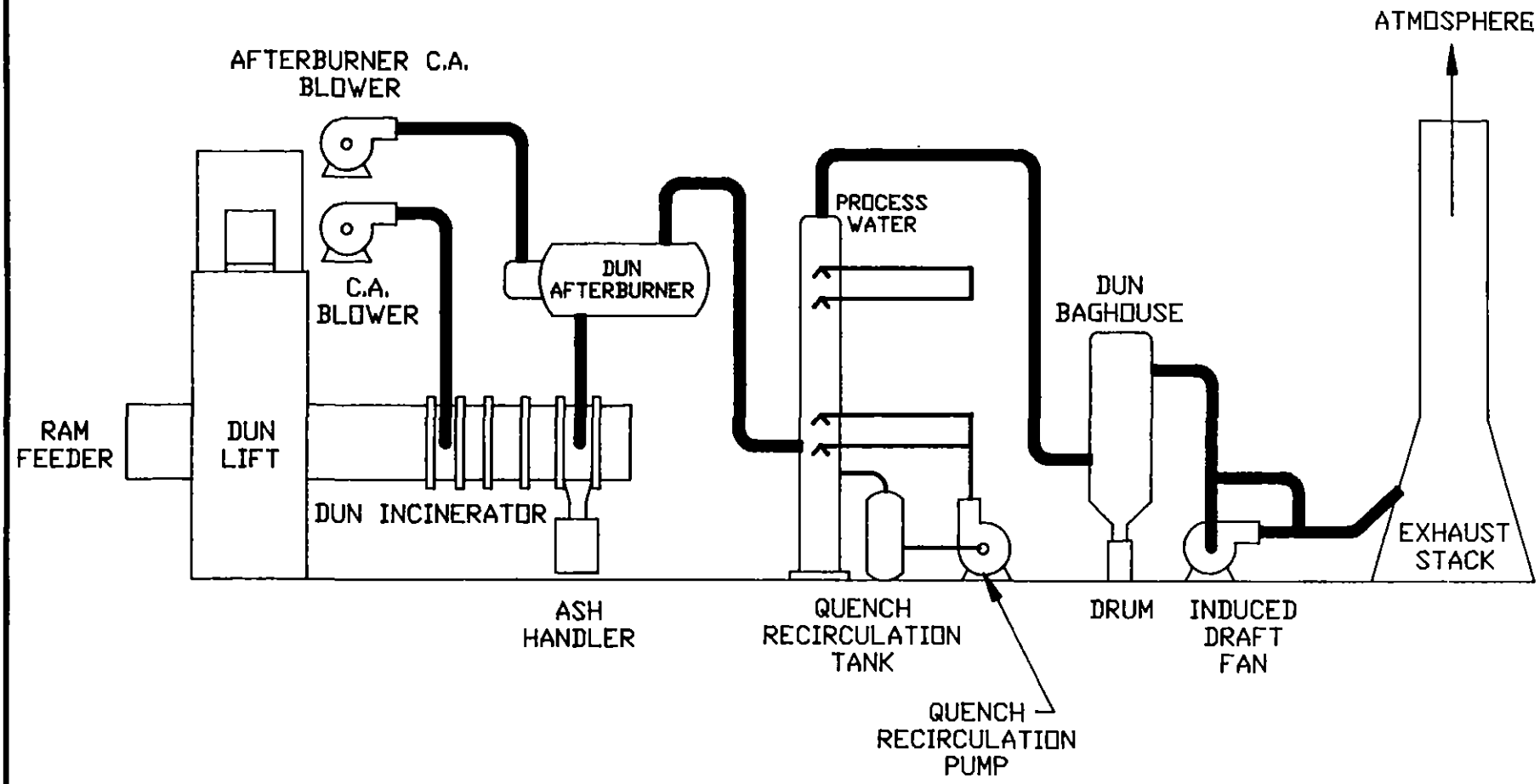

FIGURE 3-3
SCHEMATIC DIAGRAM OF DUN INCINERATOR
AND POLLUTION ABATEMENT SYSTEM (PAS)

schdun.dwg

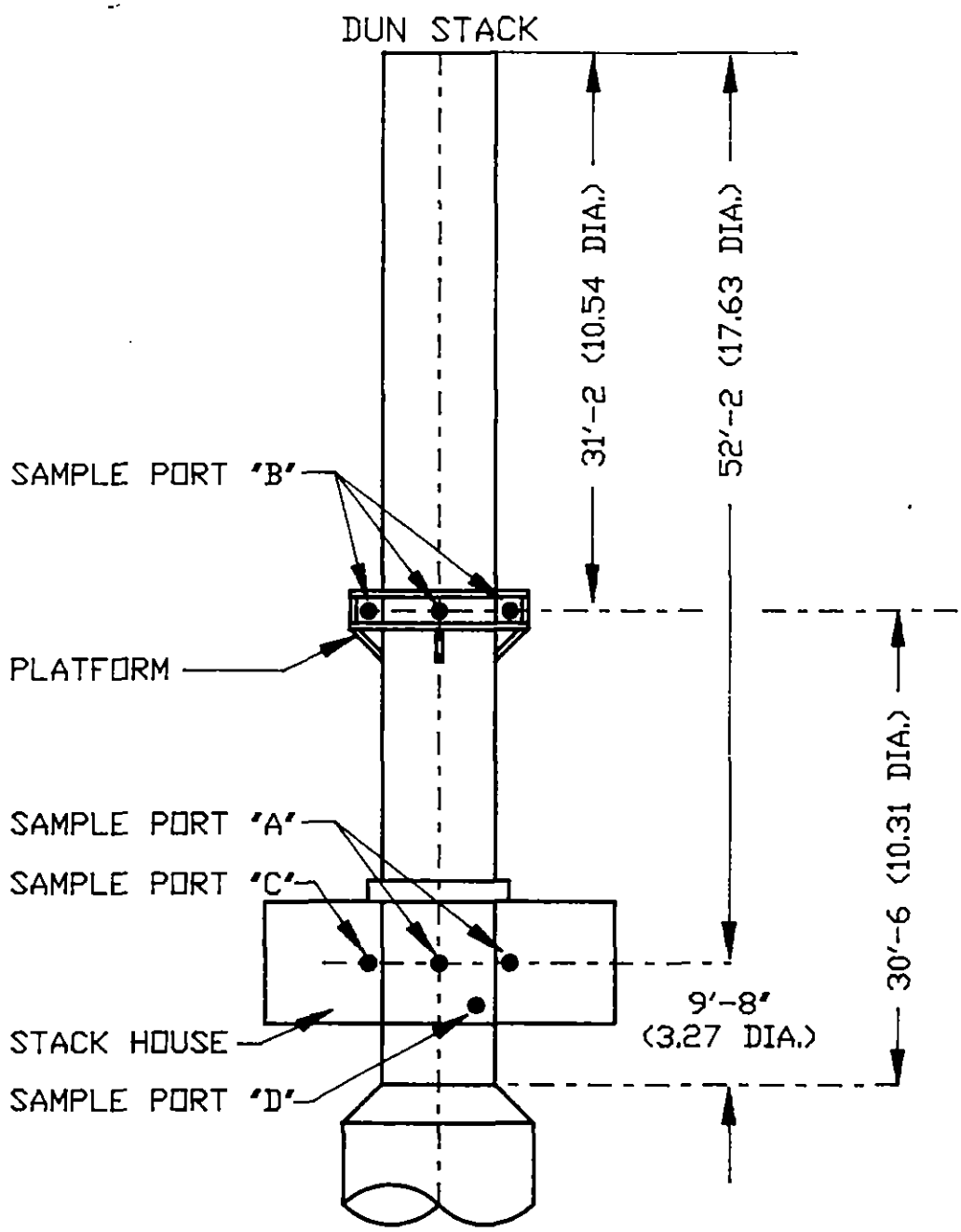

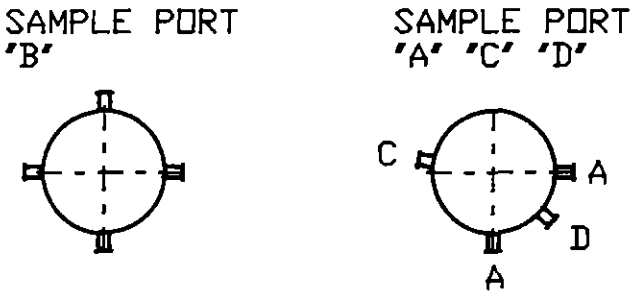

SAMPLING PORT INDEX	
PORT	PARAMETER
A	MM5
B	PART/HCl PART/METALS
C	CEMS
D	VOST

FIGURE 3-4
SAMPLE PORTS ON DUN STACK

DUNPORTS.DWG

4.0 TEST PROCEDURES

4.1 PREPARATION FOR TESTING

All equipment and instrumentation was calibrated as required and was rendered operational prior to the start of the test. The waste feed consisted of a known quantity of Agent GB absorbed in cellulose in a polyethylene carboy, then placed in cardboard boxes with wood dunnage and pallets. The agent feed rate to the DUN was 10.3 lbs/hr. The total waste feed including the absorbent, polyethylene carboy, dunnage and cardboard box was 338 lbs/hr.

The incinerator and pollution abatement system (PAS) operating criteria were as follows:

DUN Primary Chamber Temperature	1650 ± 450 °F
DUN Secondary Chamber Temperature	2000 ± 200 °F
Carbon Monoxide (corrected to 7% O_2)	≤100 ppm hourly avg.
Carbon Monoxide (corrected to 7% O_2)	200 ppm peak (5 minutes)
Baghouse Delta P	0.5 - 20 in. H_2O
Quench Exhaust Temperature	300 - 475 °F
Afterburner O_2	8 - 14% (dry basis)

4.2 CONTINUOUS COLLECTION METHODS

4.2.1 Continuous Emission Monitors (CEMS)

CEMS are used at Johnston Atoll Chemical Agent Disposal System (JACADS) to determine O_2, NO_x, SO_2 and CO. The monitors are checked for drift and span every 24 hr. The copies of the daily check documentation is included in Appendix E. They are automatically calibrated approximately every hour.

4.2.2 Chemical Agent Monitors

The Automatic Continuous Air Monitoring System (ACAMS) was used to monitor for GB in stack gases. The ACAMS is capable of providing near-real-time monitoring for trace quantities of military chemical agents. Essentially, the ACAMS is a gas chromatograph (GC) that has been equipped with a solid-sorbent sample-collection device and with the circuitry, hardware, and software to permit it to collect and analyze samples automatically. The ACAMS is equipped with a fused-silica GC capillary column, a flame-photometric detector (FPD), a sampling pump, and a small tube packed with a solid-sorbent material. ACAMS units used for stack sampling are interfaced with stack-sampling devices that enable them to sample chemically hostile stack gases. Exhaust gases were monitored with an ACAMS on the stack. The ACAMS operates in cycles of fixed duration that contain predetermined periods for the collection and the analysis of samples. It can be set to various durations, flows, voltages, etc., but once set, it is left to run automatically.

The ACAMS was calibrated and challenged by injecting known amounts of dilute GB solution into the sampling system and allowing the instrument to complete its sampling/analysis cycle. Instrument responses are displayed on a Gas Plasma Display (GPD) screen on the front of the instrument, on a strip-chart recorder that is part of the ACAMS unit, and in the JACADS control room.

The ACAMS units are calibrated at a minimum of every 30 days or if they fail two consecutive challenges. The instrument is calibrated to the allowable stack concentration (ASC) 0.0003 mg/m^3 and is set to alarm at 0.8 ASC. An additional calibration challenge to the ASC and to the Limit of Quantification (LOQ) is performed every 24 hours during trial burn operation. Set-points are recalibrated if necessary. ACAMS calibration and challenge data for the DUN trial burn are included in Appendix E.

4.3 MANUAL SAMPLE COLLECTION METHODS

Sampling was performed according to the "Sampling and Analytical Protocol for the Resource Conservation and Recovery Act (RCRA) Trial Burns and the Toxic Substance Control Act (TSCA) Demonstration Test Burn at JACADS" (included as Appendix G). Standard methods were used to collect the samples. A brief description of the methodology that was employed and the samples that were generated is presented within this section.

4.3.1 Modified Method Five (MM5)

Method 0010 from SW-846 was used to collect samples for determinations of semivolatile products of incomplete combustion (PICs) and dioxins/furans. All train glassware was cleaned with a toluene rinse followed by 1:1 solution of methanol/methylene chloride prior to use. The sample was collected for four hours during the test run. During recovery of samples, all glassware prior to the solid sorbent was rinsed first with methanol/ methylene chloride, then with toluene to generate two separate rinse samples. The filter, sorbent, and condensate were then collected, resulting in a total of five fractions for analysis.

4.3.2 Volatile Organic Sampling Train (VOST)

Method 0030 from SW-846 was used to collect samples for volatile organic compound analysis. All of the sorbent tubes and the condensate samples were recovered from the VOST system for laboratory analysis. One blank sorbent tube was included with each run with additional trip blanks as appropriate with the shipment. Each run provided four pairs of stack-sample sorbent tubes, each pair representing approximately 20 L of stack gas. The method employed the slow VOST which runs at 0.5 L/min. No samples were taken during the port changes. Two pairs were collected for 40 minutes each during the first two hours of the test run. Also two pairs were collected similarly during the last two hours of the test run.

4.3.3 Method Five Acid Train (M5AT)

EPA Methods 1, 2, 3B, 4 and 5, and Section 3.3.1 of the Methods Manual for compliance with Boiler and Industrial Furnaces (BIF) regulations were used in the collection of samples for the determination of acid gases and particulates. The sample was collected during the first two hours of the test run. Recovery of the probe wash, filter, 2 acidic and 2 caustic impingers generated six samples for analysis of particles.

4.3.4 Multiple Metals Train (MMT)

Collection of samples for the determination of metal analytes and particulates was carried out using EPA Method 29 with a Method 5 train equipped with

additional impingers containing appropriate scrubbing solutions. A 120 minute sample was collected during the last two hours of the test run. The resulting nine train fractions were submitted to the laboratory for analysis.

4.3.5 Particle Size Distribution

The size distribution of the particulate matter in the stack effluent was measured using a University of Washington Mark V cascade impactor. The impactor provides data on an aerodynamic diameter basis (the aerodynamic diameter of a particle is the diameter of a unit density sphere with the same settling velocity). The impactor was configured to provide data in seven size fractions with the cuts ranging from approximately 0.4 micrometers to 12 micrometers. The particle size samples were obtained at a single point located about 80% of the stack diameter in from the point of insertion. A constant sampling velocity was used and calculated to provide isokinetic sampling conditions on an average through the furnace charge cycle.

The sampling media (filters and collection substrates for the sized fractions) were all desiccated and weighed on-site. Weighings were done using a Cahn electronic microbalance with sensitivity of 10 μg.

4.3.6 Orsat

Manual Orsat (EPA Method 3) was used to quantify CO_2 and O_2 for molecular-weight determinations.

4.3.7 Support Methods

EPA Methods 1, 2, 3 and 4 were used for the determination of traverse points, velocity profiles, and moisture content as required in all isokinetic sampling. Appendix F details the application of these methods.

4.3.8 Total Hydrocarbons (THC)

The average THC, reported as propane, was measured by EPA Method 25A.

4.4 SAMPLE COLLECTION SEQUENCE AND PROCEDURE

4.4.1 Trial Burn Sequence

The sequence of events in carrying out the sampling was as follows:

On Thursday, December 1, work began at 0600 hours. The equipment was brought into the plant and the recovery area was set-up. All work was completed at 1630 hours.

On Friday, December 2, work began at 0600 hours. The equipment was moved onto the DUN Furnace Stack and prepared for testing. The equipment was secured for the night and all work was completed at 1630 hours.

On Saturday, December 3, work began at 0600 hours. The sample bottles were transported into the plant and the equipment was checked. The equipment was secured for the night and all work was completed at 1100 hours.

On Monday, December 5, work began at 0600 hours. The monitor was calibrated and the equipment was prepared for testing. The first set of tests for particulate matter, hydrogen chloride, hydrogen fluoride, metals, semivolatile organic compounds, volatile organic compounds, particle size distribution, and total hydrocarbons began at 1414 hours and was completed at 1848 hours. The monitor was calibrated and the samples were recovered. All work was completed at 2200 hours.

On Tuesday, December 6, work began at 0600 hours. The monitor was calibrated and the equipment was prepared for testing. The second set of tests for particulate matter, hydrogen chloride, hydrogen fluoride, metals, semivolatile organic compounds, volatile organic compounds, particle size distribution, and total hydrocarbons began at 1020 hours and was completed at 1448 hours. The monitor was calibrated and the samples were recovered. All work was completed at 1730 hours.

On Wednesday, December 7, work began at 0600 hours. The monitor was calibrated and the equipment was prepared for testing. Testing was delayed from 1132 to 1355 due to unit operational problems. The charge door remained in the closed position during the charge cycle. Minor maintenance by plant personnel was able to clear up the problem. The third set of tests for particulate matter, hydrogen chloride, hydrogen fluoride, metals, semivolatile organic compounds, volatile organic compounds, particle size distribution, and total hydrocarbons began at 1031 hours and was completed at 1717 hours. The monitor was calibrated and the samples were recovered. All work was completed at 2030 hours.

On Thursday, December 8, work began at 0600 hours. The monitor was calibrated and the equipment was prepared for testing. The fourth set of tests for particulate matter, hydrogen chloride, hydrogen fluoride, metals, semivolatile organic compounds, volatile organic compounds, particle size distribution, and total hydrocarbons began at 0916 hours and was completed at 1405 hours. The monitor was calibrated and the samples were recovered. All work was completed at 1815 hours.

4.4.2 Sample Collection Procedure

Samples of 10-min duration for the particulate matter and HCl were taken isokinetically at each traverse point with an EPA-type heated, glass-lined probe (M5AT). Samples of 10-min duration for the particulate matter and heavy metals were also taken isokinetically at each traverse point with an EPA-type heated, glass-lined probe (MMT). Finally, semivolatile samples of 20-min duration were taken isokinetically at each traverse point with an EPA-type heated, glass-lined probe (MM5).

Each sampling train was leak-checked at the nozzle (at the lesser of either 15 inches of mercury vacuum or the greatest vacuum obtained during a run) before each test, during port change, during component change, and again leak-checked at the nozzle after each test at the highest vacuum reading recorded during the test. A leak criterion of "not greater than 0.1 inch of mercury in 2 minutes" was used. Pretest leaks were corrected prior to the start of sampling. The lines were also checked for clearance, and the console manometer was zeroed before each test run.

The pitot-tube lines were checked for leaks before and after each test run. The method was modified to preclude the collection of moisture in the lines. After each pressure reading, a three-way valve was utilized to clean moisture from the pitot tubes.

In summary, most stack sampling was conducted simultaneously. The M5AT sampling process concluded somewhat before the midpoint of each test run, and the MMT sampling process started at the beginning of the third hour of sampling.

The samples that were collected for analysis included those needed for determining:

a. Particulate concentration in the stack gas: two samples per test run (M5AT and MMT).

b. HCl and HF concentration in the stack gas: one sample per test run (M5AT). Originally, only HCl was to be analyzed. HF analysis was requested after the trial burn.

c. Selected metals in the stack gas: one sample per test run (MMT).

d. Volatile and semivolatile organic emissions in the stack gas (MM5 and VOST).

e. CO_2 and O_2 in the stack gas (Orsat - four one-hour integrated samples).

f. Particle size sampling in the stack gas: one sample through the first test run and a composite sample through the second, third and fourth test run.

The following were monitored:

a. NO_x in the stack gas.

b. CO and O_2 at the secondary chamber exhaust.

c. Total hydrocarbons in the stack gas.

d. SO_2 in the stack gas.

e. O_2 in the Primary Chamber exhaust gas.

f. Agent GB in the stack, quench tower emergency exhaust and room air exhaust.

In addition to the stack gas sampling, certain process samples were also taken for analysis. Sample quantities in excess of those required for the analyses called for in the SRI Scope of Work for this test were taken to provide for breakage or any additional analyses if deemed necessary. In each case, a pair of samples was taken for use in the VOA analysis and a separate set of samples was obtained for other analyses. The process samples taken were as follow:

a. Fuel oil was sampled before and after each test from Valve 725 at the bottom of the fuel oil day-tank.

b. Quench liquid was sampled before and after each test from Valve 386 in the recirculation line to the quench nozzles.

c. Process water samples were taken from Valve 503. These samples were taken for Tests 3 and 4 only.

d. Baghouse ash was sampled three times from drums used to contain ash emptied from the baghouse hopper. The first sample was taken after Tests 1 and 2 with a new drum being put into service between Tests 2 and 3. Very little material was in the drum after Tests 1 and 2 and what material there was did not resemble fly ash but appeared to be made up largely of scale and corrosion products from duct and hopper walls. A second set of fly ash samples was obtained after Tests 3 and 4. More material was in the drum on this occasion, some of which appeared to be fly ash. However, again there was a large component resembling scale and corrosion products. Subsequent to the taking of the aforementioned samples, it was found that the ash had bridged in the baghouse hopper. Thus, the vast majority of the ash had remained in the hopper rather than dropping into the ash drums from which the samples had been taken. Consequently, a third set of ash samples representing a composite from all four tests was taken after the blockage had been cleared and the hopper had been truly emptied. This third sample was used for all analyses.

e. Furnace bottom ash was sampled twice, both times as a composite sample for all four tests. The first set of samples was taken directly from residual ash on the floor of the furnace after completion of the test series. The second set was taken as a composite from the drums in which furnace ash was stored after being removed from the furnace. The second set was analyzed for various components.

The sample valves locations are shown on Figure 4-1.

All process samples were tested by the JACADS laboratory and certified to contain less than 20 ppb of Agent GB.

4.4.3 Sampling Contingency Plan

The following contingency plans were adopted and used in these test runs:

Upset conditions in the incinerator, such as the loss of a key monitor, an agent alarm, or any non-steady-state incinerator condition, will result in a feed stoppage. Sampling operations will be affected by the upset condition as defined below:

Upset of 30 or less minutes:	Stop trains in stack
Upset greater than 30 minutes:	Remove and cap trains
Upset greater than 2 hours:	Stop test run
Cumulative feed stop of 2 hours:	Stop test run unless otherwise directed by EPA

Leak checks must be performed when the trains are removed from the stack. If unacceptable leakage is found, the test run must be terminated.

4.5 ANALYSIS

The procedures that were used for preparing and analyzing samples are described briefly in this section. The test plan in Appendix G also describes the analytical methods. The methods were based on standard EPA procedures, which are referenced below according to method number. Any deviations from the standard methods are documented with supporting quality assurance/quality control (QA/QC) results.

4.6 ANALYSIS SUMMARIES

4.6.1 Semivolatile Organics Analysis

4.6.1.1 Extractions

The XAD-2 sorbent cartridges for the MM5 were prepared according to SW-846 Method 0010. The sorbent cartridges were spiked with 1,2-dichlorophenol-d_3, 1,2,4-trichlorobenzene-d_3 and 2,3,7,8-tetrachlorodibenzo-p-dioxin-$^{37}Cl_4$ prior to shipment to the field.

MM5 samples were extracted from the sorbent cartridges according to SW-846 Method 3540. The XAD-2 sorbent cartridges and filters were spiked with polychlorinated dibenzo-p-dioxins and polychlorinated dibenzo furans (PCDD/Fs) isotope-dilution standards, which consisted of the following fourteen $^{13}C_{12}$-labeled compounds: 2,3,7,8-TCDF, 1,2,3,7,8-PeCDF, 2,3,4,7,8-PeCDF, 1,2,3,4,7,8-HxCDF, 1,2,3,6,7,8-HxCDF, 1,2,3,7,8,9-HxCDF, 1,2,3,4,6,7,8-HpCDF, 1,2,3,4,7,8,9-HpCDF, 2,3,7,8-TCDD, 1,2,3,7,8-PeCDD, 1,2,3,4,7,8-HxCDD, 1,2,3,6,7,8-HxCDD, 1,2,3,4,6,7,8-HpCDD, and OCDD. In addition, the base-neutral-acid surrogates, which consisted of phenol-d_6, 2-fluorophenol, nitrobenzene-d_5, 2-fluorobiphenyl, 2,4,6-tribromophenol, and terphenyl-d_{14}, were also added. The substances of interest that were collected in all sorbent and filter samples were Soxhlet-extracted, and liquid-impinger samples were subjected to liquid-liquid extraction by SW-846 Method 3510. The filter and front wash from each train were combined and the resin and back half of each train were combined to make two separate samples from each MM5 train. Each of the resulting samples was concentrated to 1 mL, of which 100 μL was allotted for the determination of semivolatile organics and 900 μL for determination of PCDD/F. The sample was fortified with semivolatile internal standards prior to being split for semivolatile organic analysis and dioxin/furan analysis.

Aqueous samples (process water and quench liquid) were treated for extraction by the liquid-liquid extraction method given in SW-846 Method 3520. That is, about 500 mL of each sample was placed in a continuous liquid-liquid extractor, ph adjusted to greater than 11 (if required) and spiked with the chlorinated organic surrogates and with the PCDD/Fs isotope-dilution standards. The sample was then treated by extraction with methylene chloride for 18 to 24 hrs. The methylene chloride was removed, the pH of the sample adjusted to less than 2, and the sample again subjected to extraction for an additional 18 to 24 hrs with another 500 mL of methylene chloride. Each of the resulting samples was concentrated to 1 mL and split to analyze semivolatile organics in 100 μL of the sample and PCDD/Fs in 900 μL of sample. Semivolatile compounds internal standards were added to each sample before aliquotting for semivolatile compound analysis and dioxin/furan analysis.

Samples for PCDD/F analysis were cleaned according to Method 8290. No further cleaning was performed on the portion of the sample reserved for the determination of semivolatile organics. The PCDD/F extract was partitioned against 20% aqueous KOH, 5% aqueous NaCl, several portions of concentrated H_2SO_4, and 5% aqueous NaCl (in that order). The extract was spiked with the clean-up standard ($^{37}Cl_4$-2,3,7,8-TCDD), unless the extract was from the XAD-2 cartridge which had been spiked with this compound before being shipped to the field. The sample was evaporated to 2 mL and eluted through an alumina column (Woelm Super 1). The fraction obtained from the 60% methylene chloride/hexane eluent was found to contain the components of interest, and this fraction was used for further cleanup and analysis. All samples were also cleaned with an AX-21 carbon column. The toluene fraction was reduced to 1 mL and spiked with isotopically labeled internal standard $^{13}C_{12}$ compounds: 1,2,3,4-TCDD and 1,2,3,7,8,9-HxCDD. The toluene fraction was reduced to 20 μL and the solvent exchanged with nonane before the sample was subjected to analysis by High Resolution Gas Chromatography/High Resolution Mass Spectometry (HRGC/HRMS).

The fuel-oil samples for PCDD/F analyses were prepared by weighing 2 g of each sample into approximately 20 mL hexane, adding the PCDD/F isotope-dilution standards, and cleaning the sample by the above method. The fuel-oil samples for semivolatile organic analysis were prepared by diluting 10 μL fuel oil to 10 mL with methylene chloride.

4.6.1.2 Analytical Procedures for Determining Semivolatile Organics

4.6.1.2.1 Polychlorinated Dibenzo-p-dioxins and Polychlorinated Dibenzofurans

Samples designated for PCDD/F analyses were analyzed for the 17 PCDDs and PCDFs that contain chlorine at the 2, 3, 7 and 8 positions by HRGC/HRMS according to EPA Method 8290.

The samples were also analyzed for total TCDFs, total TCDDs, total PeCDFs, total PeCDDs, total HxCDFs, total HxCDDs, total HpCDFs, and total HpCDDs. SW-846 Method No. 8290 was used except that 14 (instead of 9) isotopically labeled internal standards, 2 isotopically labeled recovery standards, and 1 isotopically labeled cleanup standard were used.

Five-point calibration curves were generated for the components. The calibration curves for 2,3,7,8-TCDF and 2,3,7,8-TCDD covered the range from 0.02 to 4 ng; the curves for the 2,3,7,8-PeCDFs, 2,3,7,8-PeCDDs, 2,3,7,8- HxCDFs, 2,3,7,8-HxCDDs, 2,3,7,8-HpCDFs, and 2,3,7,8-HpCDDs extended from 0.10 to 20 ng; and the curves for OCDF and OCDD extended from 0.2 to 8 ng in 20 μL of solution.

The HRGC/HRMS analysis conditions are given below:

Instrument:	VG 70S GC/MS equipped with HP 5890 GC
Column:	J&W DB-5, 60 m x 0.32-mm ID, 0.25-μm film
Column Temp:	100°C hold 2 min, then ramp to 180°C at 20°C/min, hold 1 min, then ramp to 220°C at 5°C/min, hold 14 min, then ramp to 300°C at 5°C/min, hold 8 min
Carrier Flow:	He at 1.5 mL/min

Injector Temp:	275°C
Interface Temp:	215°C
Injection Volume:	2 μL
Data System:	VG 11/250J

4.6.1.2.2 Base-Neutral-Acid Analysis

The MM5 samples, as well as the process liquid, quench liquid and fuel oil samples, were analyzed for base-neutral-acid compounds by Method 8270. Compounds that were analyzed included the target list from the test plan as well as nontarget compounds that were present at high levels. The spectra are retained in the files. Internal standards for semivolatile analysis were added to 1 mL aliquots of the fuel oil samples. The GC/MS conditions are given below:

Instrument:	HP 5971 GC/MS equipped with HP 5890 GC
Column:	DB 5-MS, 30 MX0.25 mm ID, 0.25 μm film
Column Temp:	45°C hold 3 min, then ramp to 300°C at 8°C/min, then hold
Carrier flow:	He at 1 mL/min
Injector Temp:	270°C
Interface Temp:	280°C
Injection Volume:	1 μL
Scan:	35 to 650 at 1 scan/sec
Data System:	HP DOS

4.6.2 Volatile Organics Analysis

Stack gases were analyzed for volatile organic compounds (VOCs) by SW-846 Methods 5040 and 8260 with the 8240 compound list. Thus, the analyses were based on VOST sampling and GC/MS analysis. Aqueous process samples were analyzed for VOCs by SW846 Method 8260 with the 8240 list. Compounds that were analyzed included the target list from the test plan as well as nontarget compounds that were present at high levels. Internal standards and surrogates were added to all samples immediately prior to analysis by GC/MS. The spectra are retained in the files.

The GC/MS conditions are given below:

Purge and Trap:	Tekmar LSC-2, Trap OV-1/Tenax/Silica Gel/Charcoal
Purge:	11 min
Desorb Temperature:	200°C

Desorb Time:	4 min
GC:	HP 5890 Series II
Column:	30 m x 0.53 mm ID, 3.0 μm, DB624
Program:	46°C hold 5 min, then ramp to 140°C at 6°C/min
MS:	HP 5971 MSD
Scan:	35 to 260 amu at 4 sec/scan
Source Temperature:	200°C
Interface:	Jet separator, 250°C

4.6.3 Anions Analysis

The M5AT samples were analyzed for chloride and fluoride.

The ion-chromatography conditions are listed below:

Instrument:	Dionex DX-100 with conductivity detection
Column:	AS-4A-SC, 4 mm
Eluent:	0.75 mM sodium bicarbonate/2.0 mM sodium carbonate
Flow Rate:	2.0 mL/min
Injection Volume:	100 μL

4.6.4 Metals Analysis

The MMT metals other than mercury and thallium were determined by inductively coupled plasma atomic-emission spectrometry (ICP) according to SW-846 Method No. 6010. These analyses were performed on a Perkin-Elmer Plasma 400 Emission Spectrometer. Samples were prepared for analysis as set forth in SW-846 Method No. 3015 and SW Method No. 3051, which involves microwave assisted acid digestion. The ICP wavelengths that were used are listed below. Some elements were analyzed at multiple wave lengths due to matrix interferences and for confirmation of an analyte's presence.

Metal	Wavelength, nm
Arsenic	193.696/197.197
Selenium	196.026/203.965
Chromium	205.552
Antimony	206.833/217.581/231.149
Zinc	213.856
Cadmium	214.438
Lead	220.353
Nickel	231.604

Metal	Wavelength, nm
Barium	233.527/413.066
Manganese	257.610
Vanadium	292.402
Beryllium	313.042
Silver	328.068
Tin	189.980
Cobalt	230.786
Copper	324.754

Mercury was determined in MMT samples by cold-vapor atomic-absorption spectrometry at 253.7 nm (SW-846 Method No. 7470) with Lehman PS200 automated mercury analyzer. Thallium was analyzed by graphite furnace atomic absorption spectrometry at 276.8 nm with a Perkin-Elmer Model 3100 Spectrometer, as described in SW-846 Method No. 7841.

4.6.5 pH and Reactivity Measurements

The pH values were determined by combination glass electrode (with internal reference electrode) according to SW-846 Method 9040.

Reactivity measurements on process samples were done by Environmental Service Laboratories for SRI. The analysis was done by Method 335.2 for cyanide and Method 376.1 for sulfide.

4.6.6 Particulates

Particulates were quantified in the acetone-probe rinse and in the filters from the MMT and the acid train. These samples were dried to a constant weight in a desiccator and weighed with an analytical balance to ±0.1 mg.

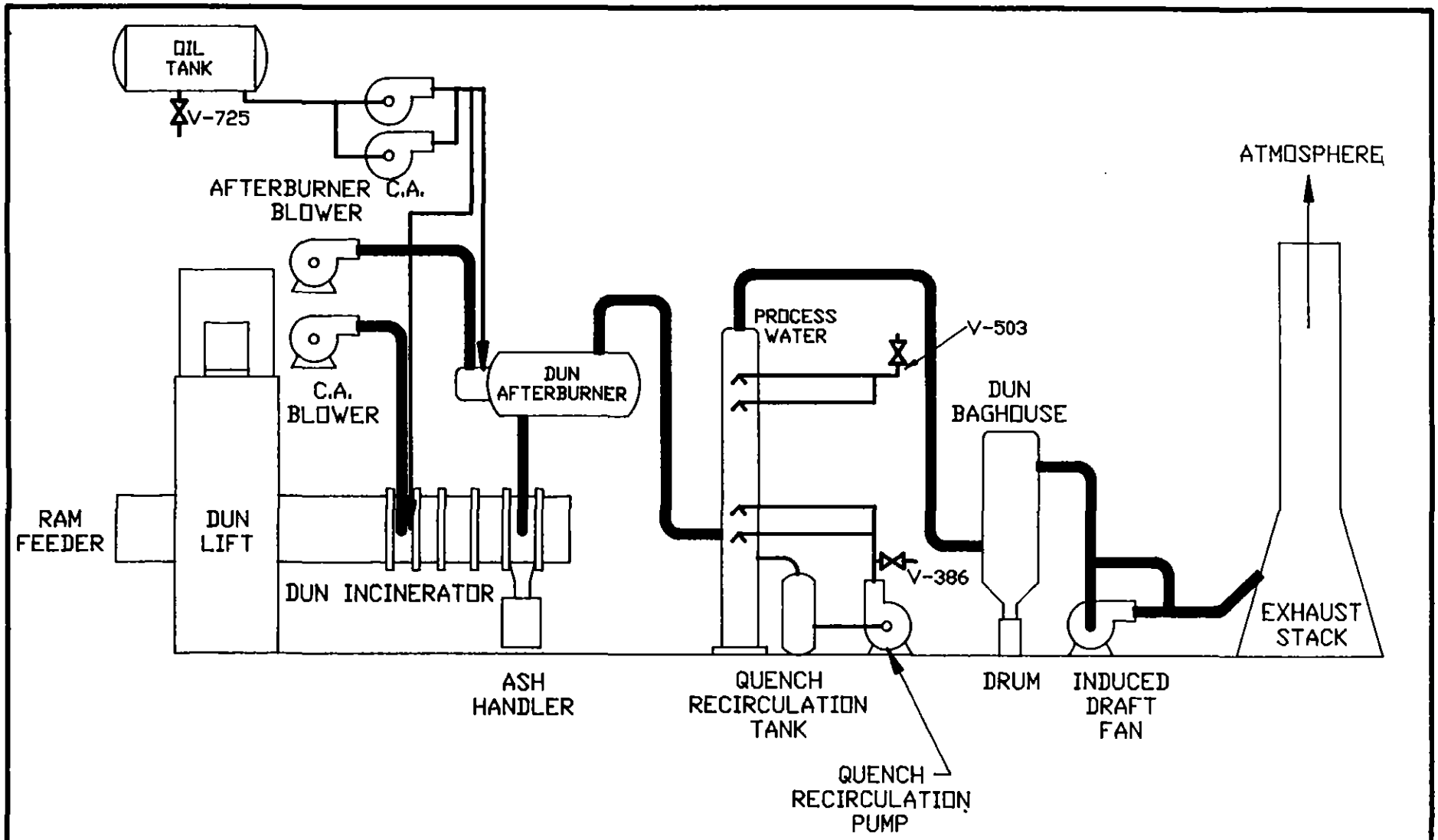

FIGURE 4-1
SCHEMATIC DIAGRAM OF DUN INCINERATOR
AND POLLUTION ABATEMENT SYSTEM (PAS)

schdun2.dwg

5.0 TEST RESULTS

5.1 INTRODUCTION

The test results for the DUN GB Trial Burn describe the DUN process characteristics, the primary chamber, secondary chamber and pollution abatement system operating characteristics, the nature of the stack emissions, and the chemical content of the solid residue and process liquid samples. These results allow calculation of RCRA mandated parameters such as DRE for the POHC, GB concentrations in the stack, particulate emissions, HCl emissions, CO concentrations in the afterburner exhaust and the concentration of certain metals in the process liquids. Additionally, data are available from the monitoring of exhaust emissions for O_2, CO_2, NO_x, HF, PICs, PCDD/Fs and metals. Additional data are available from the analysis of process samples (process water, fuel oil and quench liquid) for PICs, PCDD/Fs, metals, reactivity and Ph. Ash samples from the furnace and baghouse were analyzed for PICs, PCDD/Fs, metals, and reactivity.

5.2 PROCESS DATA

5.2.1 Process Data Acquisition and Recording

Process conditions for the four test runs are summarized in Table 5-1. The data were compiled from PDAR System records and manual stack sampling logs. The data indicates that the required conditions, as specified in the RCRA permit, were maintained throughout the runs. The RCRA permit limits are also included in Table 5-1.

The CO concentration data in the PDAR log were already corrected to 7% oxygen but SO_2 and NO_x data were manually corrected during calculation of minimum, maximum and average values. CEMS data obtained during instruments' blowback were excluded. The CEMS instruments have a five minute blowback cycle approximately every 45 minutes to purge the sampling probes to prevent plugging. Instantaneous CO was found to range from 0.0 to a peak of 328 ppm. The average for each test ranged from 34.6 to 42.7 ppm. The hourly rolling average ranged from 32.1 ppm to 46.1 ppm and the five minute average ranged from 30.4 ppm to 62.2 ppm. These values are well below the required limits of 100 ppm for the hourly rolling average and 200 ppm peak for five minutes. Figures 5-1 through 5-3 show how the O_2 and CO concentrations, and afterburner exhaust gas temperature varied during Test Run 1. These are presented as examples only. Complete data for all four test runs are included in Appendix C.

The graphs for CEMS data include periods of instrument blowback. Some peaks (excursions) shown on the CO graph (Figure 5-2) are due to blowback cleaning of the oxygen sensor. Others are due to normal operation. Also, the graphs for Test Run #3 include data during interruption from 1131 to 1355. The primary chamber pressure relative to the room pressure ranged from -0.23 to -7.72 inches w.c. It remained negative compared to the room pressure as required by the permit.

The fuel flow to burners 1 and 3 was shut off during dunnage feed as required by operating procedures.

5.2.2 Stack Sampling Data

The stack gas sampling conditions data are provided in Table 5-2. The results shown are obtained by averaging the data from M5AT and MMT sampling trains.

Hourly Orsat data are presented in Table 5-3. Nitrogen concentrations shown on Table 5-3 were obtained by difference.

5.2.2.1 Sample Calculations (for Test Run 1)

Using data from METCO Test Report in Appendix F:

Gas flow, acfm = (6143 + 5915)/2 = 6029 acfm

Gas flow, dscfm = (2942 + 2893)/2 = 2917.5 dscfm

Gas Temperature, °F = (232 + 230)/2 = 231°F

% Moisture = (37.59 + 36.4)/2 = 37.0%

Percent O_2 (dry) = (10.8 + 11.0)/2 = 10.9%

Percent CO_2 (dry) = (7.7 + 7.5)/2 = 7.6%

Percent N_2 (dry) = 100 - 10.9 - 7.6 = 81.5%

Ambient Pressure, in. Hg = (29.98 + 29.98)/2 = 29.98" Hg

$$\text{Stack Pressure, in. w.c.} = \frac{(-0.19) + (-0.19)}{2} = -0.19\text{" w.c.}$$

$$= -0.19 \text{ in. w.c.} \times 0.07343 \frac{\text{in. Hg}}{\text{in. w.c.}} = -0.01395\text{" Hg}$$

Stack Pressure, in. Hg = 29.98 - 0.01395 = 29.966" Hg

$$\text{Mol. Wt. (Dry)} = \frac{(32 \times 10.9)}{100} + \frac{(44 \times 7.6)}{100} + \frac{(28 \times 81.5)}{100} = 29.652$$

Volume of 1 lb. mol. of gas at EPA standard conditions =

$$\frac{22.4 \text{ liter}}{\text{g mol}} \times \frac{453.59 \text{ gm mol}}{1 \text{ lb mol}} \times \frac{0.03531 \text{ ft}^3}{1 \text{ l}} \times \frac{(460 + 68)°\text{F}}{(460 + 32)°\text{F}}$$

$$= 385.02 \frac{\text{ft}^3}{\text{lb mol}}$$

$$\text{Dry Gas Flow, lb/hr} = \frac{2917.5 \text{ ft}^3}{\text{min}} \times \frac{60 \text{ min}}{1 \text{ hr}} \times \frac{29.652 \text{ lbs}}{385.02 \text{ ft}^3} = 13{,}481.4 \text{ lbs/hr}$$

Percent O_2 (Wet) = (1 - 0.37) x 10.9 = 6.87%

Percent CO_2 (Wet) = (1 - 0.37) x 7.6 = 4.79%

Percent N_2 (Wet) = (1 - 0.37) x 81.5 = 51.35%

$$\text{Mol. Wt. (Wet)} = \frac{(32 \times 6.87)}{100} + \frac{(44 \times 4.79)}{100} + \frac{(28 \times 51.35)}{100} + \frac{(18 \times 37.0)}{100}$$

$$= 25.34 \text{ lb/lb-mol}$$

$$\text{Total Gas Flow, lbs/hr} = \frac{6029 \text{ ft}^3}{\text{min}} \times \frac{60 \text{ min}}{1 \text{ hr}} \times \frac{25.34 \text{ lbs/lb-mol}}{385.02 \text{ ft}^3\text{/lb-mol}}$$

$$\times \frac{(460 + 68)^\circ\text{F}}{(460 + 231)^\circ\text{F}} \times \frac{29.966 \text{ in Hg}}{29.9212 \text{ in Hg}} = 18{,}220 \text{ lbs/hr}$$

5.2.3 Chemical Agent Feed Rate

The rate of chemical agent feed to the DUN, during the test burn, was 10.3 lb/hr. Waste, consisting of uncontaminated dunnage and 10.3 lb of agent was charged into the incinerator at one hour intervals during each test run. Total waste feed rate including dunnage was 337.55 lbs/hr. Table 5-4 provides the composition of a typical hourly waste charge. This table includes metals analyses performed on three grab samples of the wood dunnage.

5.3 RESULTS FROM THE DETERMINATION OF SEMIVOLATILE ORGANICS

5.3.1 General

Operating conditions for the Modified Method 5 (MM5) sampling train are given in Table 5-5.

MM5 samples, aqueous process liquid samples, fuel oil samples and ash samples were analyzed for semivolatile organic compounds by SW-846 Method 8270. Compounds which were analyzed included the target list from the Sampling and Analysis Plan (Appendix G) as well as 14 compounds identified as "Additional Clean Air Compounds." Also, the analysis included 20 (if present) non-target compounds found in greatest concentration, listed in this report as "Tentatively Identified Compounds." Fuel oil samples were diluted and analyzed without extraction. The dilution was necessary to reduce the extremely high background associated with undiluted samples of this matrix. The mass spectra are retained in SRI files, and all analyses were performed by GC/MS. Internal standards were added to all samples immediately prior to analysis by GC/MS.

Samples were prepared as described in Method 0010. The MM5 trains were spiked with three acid surrogate compounds and three neutral surrogate compounds for the semivolatile analyses prior to extraction. After extraction the samples were split such that one-tenth of the sample was taken for semivolatile organics analysis and the remaining nine-tenths for PCDD/Fs analysis. Semivolatile internal standards were added immediately prior to analysis. All compounds and spikes were quantified against the internal standards.

5.3.2 Results

5.3.2.1 Stack Gas Samples

Table 5-6 lists the system performance for semivolatile products of incomplete combustion. The results shown have been corrected for blank train data. Benzoic acid was found during Test Runs 1, 3 and 4. Bis(2-ethylhexyl) phthalate was found during Test Runs 1 and 2 only. Neither of these were found in the blank train.

Table 5-7 shows the total mass of semivolatile compounds collected for each sample.

Table 5-8 provides the detection limits for semivolatile compounds in stack exhaust gas.

Table 5-9 gives a list of tentatively identified compounds found in the MM5 samples, the estimated mass of each compound and the corresponding calculated stack gas concentration. Tentative identification was done using the National Bureau of Standards (NBS) 49,000 compound library. The front half of all test runs indicated a limited number of identifiable compounds.

5.3.2.2 Ash Samples

As shown in Table 5-10, bis(2-ethylhexyl)phthalate was the only semivolatile compound found in the ash samples. Its concentration was 1640 $\mu g/kg$ in one sample of furnace ash. No semivolatile compounds were found in the baghouse ash.

Table 5-11 lists the semivolatile Tentatively Identified Compounds in baghouse and furnace ash samples. Both samples show significant quantities of nonane. It is probably a residual of JP-5 fuel oil combustion. Other compounds were present in relatively smaller quantities.

5.3.2.3 Liquid Samples

The results from the analyses of aqueous process samples and fuel oil samples for semivolatile organic compounds, are given in Tables 5-12 through 5-15. No target compounds or additional clean air compounds were found in any of these samples.

Table 5-16 lists the semivolatile tentatively identified compounds in quench liquid samples. Nonane is present in these samples in significant quantities. Other compounds are present in smaller concentrations.

Spectra and estimated amounts of the tentatively identified non-target compounds for the process samples are given in Appendix J.

5.3.3 Sample Calculations

5.3.3.1 Ash samples (Bis(2-ethylhexyl)phthalate in Furnace Ash) (Sample No. DUN4-SVO-392, Run No. HO4119)

For furnace ash, the data required to calculate the concentration of bis(2-ethylhexyl) phthalate may be found in Appendix J.

The response factor may be found in the Quant Report, Title: BNA Initial Calibration 120794 at Compound Number 71. This Quant Report is in the initial calibration section of the appendix.

The area of component detected, the area of internal standard, and amount of internal standard can be found in the Quant Report for Sample Number DUN4-SVO-392, SRI Run Number H04119. The area of component detected is listed at Compound Number 71. The internal standard applied to this compound is listed in the right hand column as ISTP 005. The area and quantity of Internal Standard 5, chrysene, is listed at the top of the report.

The sample weight is found in the notebook pages section of the Appendix on H590-88 at H590-88-3.

$$\frac{\text{(Area of component detected)(Mass of internal standard)}}{\text{(Area of internal standard) (Resp. factor)(Sample weight)}} =$$

$$\frac{(409875)(40\ \mu g)}{(811445)(1.233)(0.010)} = 1640\ \mu g/kg$$

5.3.3.2 MM5 Trains (For Benzoic Acid - Test Run #1)
(Sample No. DUN1-SVO-028)

$$\frac{\text{(Area of component detected)(Mass of internal standard)}}{\text{(Area of internal standard)(Resp. factor)}} =$$

$$\text{(Run No. H04060) front} = \frac{(0)(40\ \mu g)}{(1399792)(0.199)} = 0.0\ \mu g$$

$$\text{(Run No. H04051) back} = \frac{(3030376)(40\ \mu g)}{(6876526)(0.199)} = 88.5\ \mu g$$

The front half and back half sample masses were individually blank corrected prior to adding them and calculating the concentration in the stack gas. For sample values less than or equal to 110% of the blank value, the corrected value is zero. For sample values exceeding 110% of the blank value the corrected value is the sample value minus the blank value.

In this case, the blank train data showed 0 μg of benzoic acid, therefore, there was no need for correction.

The corrected front and back were added and then divided by the sample volume to obtain the stack concentration:

$$\text{(stack concentration)} = \frac{\text{(corrected front)+(corrected back)}}{\text{(sample volume)}}$$

$$= \frac{88.5\ \mu g + 0\ \mu g}{3.1809\ dscm} = 27.8\ \mu g/dscm$$

5.4 DIOXINS and FURANS (PCDD/Fs)

5.4.1 Results

Table 5-17 lists the stack exhaust gas concentrations for dioxins and furans. The results have been corrected for blank train data.

Total TCDDs, TCDFs, PeCDFs, PeCDDs, HxCDFs, HxCDDs, HpCDFs, HpCDDS, OCDF, and OCDD were estimated by using an average response factor for each group and by summing the estimated quantities of the compounds that meet the retention-time requirements and isotopic-abundance requirements of Method 8290. Appendix H gives data sheets for the PCDD/Fs analytes. The total dioxins are listed as 2,3,7,8-TCDD Toxicity Equivalent. The Toxicity Equivalent (TE) factors are based on EPA Report 625/3-89/16. The highest total concentration was 0.128 ng/dscm.

Table 5-18 summarizes the total PCDD/Fs results for the stack gas, and Table 5-19 gives the results of the analyses for target PCDD/Fs components. Some PCDDs and PCDFs were detected. Surrogate recoveries were generally good. All but three samples had surrogate recovery between 80% and 130%. The minimum surrogate recovery was 50% (Test Run #3 back). These surrogate recoveries indicate good confidence in the test results.

All of the PCDD/Fs that were detected were found in the back half of the train and thus would be associated with gaseous material and not particulates. (The front half of a sample train collects particulate and the back half collects gas phase analytes.) Additionally, the levels of PCDD/Fs when converted to toxicity equivalent (TE) (see description below) yielded less than 0.55 ng of 2,3,7,8-TCDD-equivalent dioxins present in any sample.

The samples of process liquids (process water and quench liquid) and fuel oil were analyzed for PCDD/Fs. Tables 5-20, 5-22 and 5-24 give the results of these analyses for total PCDD/Fs. Tables 5-21, 5-23 and 5-25 give the results of analyses for target PCDD/Fs. TCDD was detected in the Test Run #4 process water pretest sample, but not in the post test sample. TCDF was detected in the Test Run #4 post-test sample only. No target PCDD/Fs were detected. No PCDD/Fs were detected in the lab blanks. The TCDD/Fs detected in the process water from Test Run #4 are probably due to cross contamination from other sources, especially since they are present in an isolated case. All but two samples had surrogate recovery between 80% and 130%.

Table 5-26 gives the results of the analyses for total PCDD/Fs in the ash samples and Table 5-27 gives the target PCDD/Fs results.

The dioxins present in the ash are possibly due to the small amount of chlorine present in the agent feed. Alternatively, chlorine could have come from the dunnage fed to the incinerator which may have been treated with PCP (polychlorophenol) for preservation purposes. Literature search indicates a higher propensity for dioxin formation in the presence of trace metals, moisture, carbon dioxide, hydrogen chloride and chlorine. Also, temperatures in the range of 250 to 600°C provide for increased formation of dioxins. All the conditions are present in the DUN system which would result in dioxin formation. The literature

search also points out that if there is ash present, it will absorb dioxins. This is confirmed by the dioxins results obtained from the DUN baghouse and furnace ash.

The dioxins found in the baghouse ash are an order of magnitude higher than the furnace ash. This may be due to dioxins formation in the gas phase rather than the solid phase. Also, the furnace ash remains at a higher temperature than the baghouse ash. This may result in dioxin desorption from the furnace ash and subsequent absorption in the baghouse ash.

It should be noted that regulatory limits exist only for dioxins from municipal waste combustors in the exhaust gases and not for ash wastes.

The 2,3,7,8-TCDD toxicity equivalent (TE) values for all samples are included in Tables 5-18 through 5-27, mentioned above. TE is a numeric value which takes into account the relative toxicity of each target PCDD/F and expresses the total amounts or concentrations of target PCDD/Fs found in a sample as if it were all 2,3,7,8-TCDD. The TE can be calculated as:

TE = 1.00 [2,3,7,8-TCDD]+0.10 [2,3,7,8-TCDF]+0.5 ([1,2,3,7,8-PeCDD]+[2,3,4,7,8-PeCDF])+0.05[1,2,3,7,8-PeCDF]+0.1([1,2,3,4,7,8-HxCDD]+[1,2,3,6,7,8-HxCDD]+[1,2,3,7,8,9-HxCDD]+[1,2,3,4,7,8-HxCDF]+[1,2,3,7,8,9-HxCDF]+[1,2,3,6,7,8-HxCDF]+[2,3,4,6,7,8-HxCDF])+0.01 ([1,2,3,4,6,7,8-HpCDD]+[1,2,3,4,6,7,8-HpCDF]+[1,2,3,4,7,8,9-HpCDF])+0.001 ([OCDD]+[OCDF])

The factors used to calculate TE were taken from "Update of Toxicity Equivalency Factors (TEFs) for Estimating Risks Associated with Exposures to Mixtures of Chlorinated Dibenzo-p-Dioxins and Dibenzofurans (CDDs/CDFs)", March 1989, (EPA 625/3-89/16). Guidance from EPA indicates that only actual values, and not detection limits, should be used in a TE calculation.

5.4.2 Sample Calculation

The calculation procedure for both target and total PCDD/Fs is identical to that for the semivolatile organic compounds, described above.

Sample calculations are shown below:

MM5 Train Back (PCDD/Fs)
1,2,3,4,6,7,8-HpCDF (Sample No. DUN1-SVO-040, SRI No. VO7587)
Target Analyte

The values required to calculate 1,2,3,4,6,7,8-HpCDF in DUN1-SVO-040, the MM5 train for Run 1 can be found in Appendix H.

Area (HpCDF) can be found in Report VO7587ss under sample data at component number 50. The value is 348.

Area (internal standard) can be found in Report VO7587ss under sample data at component number 55, 13 C 12-1,2,3,4,6,7,8-HpCDF(M+2). The value is 1025.

The amount (internal standard) is also listed in Report VO7587ss under sample data at component number 55, it is 2.00 ng.

The average relative response factor (RRF) can be found in the initial calibration section of the appendix on Report V07570i under the table heading: Isotope Dilution Response Factors CS1 to CS5 at 1,2,3,4,6,7,8-HpCDF(M+2). The value is 2.234.

The values required to calculate total HpCDF in DUN1-SVO-040 are listed on the first page of V07587ss. The values required to calculate total HpCDF in DUN1-SVO-028; Run 1 train front, are listed on the first page of V07588ss.

$$\text{Amount (HpCDF)} = \frac{\text{Area (HpCDF)}}{\text{Area (Isotope Dilution Standard)}} \cdot \frac{\text{Amount (Isotope Dilution Standard)}}{\text{RRF}}$$

$$= \frac{348.1}{439.4} \cdot \frac{2\text{ ng}}{2.234}$$

$$= 0.709\text{ ng}$$

MM5 Train (PCDD/Fs)
Total HPCDF Test Run #1 (Sample Nos. SVO-028 (SRI No. V07588) [front] and SVO-040 (SRI No. V07587) [back])

$$\text{Amount (HPCDFs)} = \frac{\text{Area (HpCDFs)}}{\text{Area (Internal Standards)}} \cdot \frac{\text{Amount (Internal Standards)}}{\text{Average RRF}}$$

$$\text{front} = \frac{(23)(4.0\text{ ng})}{(766.16)(1.8270)} = 0.066\text{ ng}$$ (called Not Detected [ND] by Analyst)

$$\text{back} = \frac{(492)(4.0\text{ ng})}{(766.78)(1.827)} = 1.41\text{ ng}$$

The front half and back half sample masses were individually blank corrected prior to summing and calculating the concentration in the stack gas. For sample values less than or equal to 110% of the blank value, the corrected value is zero. For sample values exceeding 110% of the blank value the corrected value is the sample value minus the blank value.

Front: 0 ng - 1.1(0.22 ng) → 0 ng
Back: 1.41 ng - 1.1(0 ng) → 1.41 ng

The corrected front and back are summed, and then divided by the sample volume to obtain the stack concentration:

$$\text{stack concentration} = \frac{\text{(corrected front)+(corrected back)}}{\text{(sample volume)}}$$

$$= \frac{(0 \text{ ng} + 1.41 \text{ ng})}{3.1809 \text{ dscm}} = 0.443 \text{ ng/dscm}$$

5.5 VOLATILE ORGANICS ANALYSES

5.5.1 Results

Table 5-28 provides the overall stack gas analyses of volatile products of incomplete combustion for the DUN Trial Burn. Units are μg/dscm of stack exhaust gas, with blank correction applied. Detection limits for VOST analytes are given in Table 5-29.

Specific results from the analyses of VOST samples for volatile organic compounds are given in Tables 5-30 through 5-33. For VOST tubes and condensates the results are given in total mass collected.

Acetone was found in all of the VOST tubes, except for the field blanks. It was also found in one of the two condensate trip blanks. Chloroform and toluene were also found in nearly all of the Tenax and condensate sample tubes, as well as both condensate trip blanks. These three compounds are believed to be contamination, rather than actually present in the stack gas.

Nontarget compounds present at levels above their detection limits were tentatively identified (NBS 49,000 compound library). Table 5-34 presents the VOST tentatively identified compounds.

Table 5-35 provides the results of analyzing the fuel oil samples for volatile organic compounds. M&P xylene and O-xylene were found in the fuel oil samples, with no significant difference between pretest and post-test samples.

The results of analyses of the quench liquid and process water samples for volatile organic compounds are given in Table 5-36. Detection limits for the aqueous samples are given in Table 5-37. Bromoform and/or acetone were found in the process water samples. The quantities found, and comparison of the pretest and post-test results indicate that this is probably contamination originating in the process water.

Tentatively identified compounds in the quench liquid samples are given in Table 5-38.

Table 5-39 provides the results of analyzing the ash samples for volatile organic compounds. Acetone, at a concentration of 90 μg/kg was found in the baghouse ash. No other volatile organic compounds were found in the ash samples.

No tentatively identified volatile organic compounds were found in the ash samples (Table 5-40).

5.5.2 Sample Calculations

5.5.2.1 Aqueous Process Samples (TR 4 Process Water Pre Test for Bromoform) (Sample No. DUN4-VO-956, Run No. P03784)

The values required to calculate bromoform in DUN4-SVO-956, the process water pre-sample for Run 4 can be found in Appendix 1.

Area of component detected can be found on the quant report for this sample P03784 at target number 39. The value is 15523. The internal standard for this compound is listed to the right as 003. The area and concentration for this internal standard are listed at the top of the page for chlorobenzene-D5, they are 148371 and 50 ug/L respectively.

The average relative response factor for bromoform can be found in the initial calibration section of the appendix in Quant Report entitled 8240 Purgeables Calibration for Calibration Files P03729.D, P03730.D, P03731.D, P03732.D, and P03733.D. The value can be found at Target Number 39, it is 0.385.

$$\frac{\text{(Area of component detected)(Concentration of internal standard)}}{\text{(Area of internal standard) (Resp. factor from 5-pt calibration)}} =$$

$$\frac{(15523)(50\ \mu g/L)}{(148371)(0.385)} = 13.6\ \mu g/L$$

5.5.2.2 VOST Tubes (TR 4 Pair 3 for Benzene) (Sample Nos. VO-292 and VO-293)

$$\frac{\text{(Area of component detected)(Mass of internal standard)}}{\text{(Area if internal standard)(Resp. factor from 5-pt calibration)}} =$$

$$\text{Tenax (Sample No. VO-292)} = \frac{(2275897)(250\ ng)}{(169221)(1.476)} = 2278\ ng$$

$$\text{Tenax/Charcoal (Sample No. VO-293)} = \frac{(0)(250\ ng)}{(181747)(1.476)} = 0.0$$

5.5.2.3 Stack Gas Concentration of Benzene (TR #4)

The Tenax, Tenax/charcoal and condensate tubes from each pair were individually blank corrected. For sample values less than or equal to 110% of the blank value, the corrected value is zero. For sample values exceeding 110% of the blank value, the corrected value is the sample value minus the blank value.

No benzene was found in either the tenax (VO-053) or tenax/charcoal (VO-054) tube of the field blank, nor in the condensate blank (VO-142).

Pair 3 Tenax (VO-292):	2278 ng - 1.1(0 ng) → 2278
Pair 3 Tenax/charcoal (VO-293):	0 ng - 1.1(0 ng) → 0

The blank corrected quantities found in the tenax and tenax/charcoal tubes are summed:

Sum = (corrected tenax) + (corrected tenax/charcoal)
= 2278 ng + 0 ng = 2278 ng

The associated condensate is also blank corrected by the same method used for the tenax and tenax/charcoal tubes:

Pair 3 condensate (VO-303): 0 ng - 1.1(0 ng) → 0

Blank corrected sums for the other pairs and condensates of TR #4 are:

Pair	Sum (ng)	Condensate (ng)
1	2952	0
2	2174	0
4	2054	0

The four blank corrected tenax and tenax/charcoal pairs, and the four blank corrected condensates are summed to determine the total quantity found. A unit correction factor of 0.001 μg/ng is applied to change the units to μg and the sum divided by the sample volume to obtain stack gas concentration:

$$\text{stack concentration} = \frac{0.001(\text{pair1} + \text{pair2} + \text{pair3} + \text{pair4} + \text{cond1} + \text{cond2} + \text{cond3} + \text{cond4})}{\text{sample volume}}$$

$$= \frac{0.001\mu g/ng(2952 + 2278 + 2174 + 2054 + 0 + 0 + 0 + 0)ng}{0.0785 \text{ dscm}}$$

$$= 120.42 \ \mu g/dscm$$

5.6 ANIONS ANALYSIS

5.6.1 Chlorides in Stack Gas

Chlorides were measured in the stack gas to determine the levels of Cl_2 and HCl in the DUN emissions. The required samples were collected with a Method 5 Acid Train (M5AT). Details of the operating parameters for the M5AT are presented in Table 5-41 and indicate that the sampling was valid.

Sample preparation consisted of taking a sample volume for field verification. 2 mL of each sample was injected into a Dionex DX-100 ion chromatograph. To keep peaks within the proper range, dilutions of the samples were made as needed. Using the PE Nelson Access*Chrom data system, values for the above mentioned anions were obtained in mg/L. These results were then used to calculate acid levels using the formulae contained in SW-846 Method No. 9057.

Tables 5-42 through 5-45 give the results of the analyses of the M5AT for HCl and Cl_2. By using both H_2SO_4 and NaOH impingers, the M5AT differentiates between HCl and Cl_2 in the stack emissions.

HCl emissions in the stack gas ranged from 0.59 to 0.72 lb/hr, The allowable

limit for HCl emission is 4 lb/hr. Thus the HCl emission rate was 15% to 18% of the allowable limit. Complete tabulations of reduced data and calculations of concentrations for the trains are provided in Appendix F.

5.6.2 Fluorides in Stack Gas

Fluorides were measured in the stack gas to determine the levels of HF in the DUN emissions. The required samples were collected with an M5AT. Details of the operating parameters for the M5AT are presented in Table 5-41 and indicate that the sampling was valid.

Tables 5-46 through 5-49 give the results of the analyses of the M5AT for HF.

HF emissions in the stack gas ranged from 0.59 to 0.77 lb/hr. There is no regulatory limit with which to compare these results. Complete tabulations of reduced data and calculations of concentrations for the trains are provided in Appendix F.

5.6.3 Sample Calculations

5.6.3.1 Hydrochloric Acid (Run 1 Impinger 1)

From Appendix F, page E-10

Volume of sample	=	434 mL
Dilution Ratio	=	25
Cl^- ppm	=	6.368
Molecular Weight of Cl^-	=	35.5
Molecular Weight of HCl	=	36.5

$$\text{HCl } \mu g = 434 \text{ mL} \times \frac{6.368 \times 10^{-6} \text{ g } Cl^-}{\text{g solution}} \times \frac{1 \text{ g}}{1 \text{ mL}} \times \frac{10^6 \ \mu g}{1 \text{ g}} \times 25 \times \frac{36.5}{35.5}$$

$$= 71{,}039.1 \ \mu g$$

Using similar calculations for other impingers:

HCl in Run 1 Impinger 2 = 14,863 μg

HCl in Run 1 Impinger 3 = 314 μg

Total HCl = 86,216 μg

Volume of sample collected = 56.1 dscf

Dry gas flow rate = 2893 dscfm

$$\text{HCl emissions} = \frac{86{,}216 \ \mu g}{56.1 \text{ dscf}} \times \frac{2893 \text{ dscf}}{\text{min}} \times \frac{1 \text{ g}}{10^6 \ \mu g} \times \frac{1 \text{ lb}}{454 \text{ g}} \times \frac{60 \text{ min}}{\text{hr}}$$

$$= 0.59 \ \frac{\text{lbs}}{\text{hr}}$$

5.6.3.2 Hydrofluoric Acid (Run 1 Impinger 1)

From Appendix F, page E-84

Volume of Sample	=	434mL
Dilution Ratio	=	25
F^- ppm	=	5.311
Molecular Weight of F^-	=	19
Molecular Weight of HF	=	20

$$HF,\ \mu g = 434\ mL \times \frac{5.311 \times 10^{-6}\ g\ F^-}{g\ solution} \times \frac{1\ g}{1\ mL} \times \frac{10^6\ \mu g}{1\ g} \times 25 \times \frac{20}{19}$$

$$= 60{,}657.2\ \mu g$$

HF in Run 1 Impinger 2 = 25,637 μg

HF in Run 1 Impinger 3 = 194 μg

HF in Run 1 Impinger 4 = 28 μg

HF in Run 1 Impinger 5 = 116 μg

Total HF = 86,632 μg

Volume of sample collected = 56.1 dscf

Dry gas flow rate = 2893 dscfm

$$HF\ emissions = \frac{86{,}632\ \mu g}{56.1\ dscf} \times \frac{2893\ dscf}{min} \times \frac{1\ g}{10^6\ \mu g} \times \frac{1\ lb}{454\ g} \times \frac{60\ min}{hr}$$

$$= 0.59\ \frac{lbs}{hr}$$

5.7 METALS ANALYSIS

5.7.1 Results

Samples for the determination of metals were collected from the stack emissions with a Multiple Metals Train (MMT). Table 5-50 indicates the operating parameters for this train. Particulate matter was also collected with the MMT, and the results of particle-concentration measurements are also detailed in the table. Note the higher particulate concentration for Test Run 4. The air pulsing of the baghouse was started during this period. It results in dislodging of ash accumulated on the bags. This resulted in reduced removal efficiency of the bags as well as re-entrainment of particulates into the exhaust gas.

The system performance for metals is given in Table 5-51. The concentration of all metals is approximately 10 times higher in Test Run 4 than the other three tests. This is because of the initiation of air pulsing of the baghouse which resulted in a higher particulate matter concentration and catch.

The results for the MMT are given in Tables 5-52 through 5-55. These results show that thirteen of the eighteen metals screened were found in one or more of the samples. Eight of these metals were also found in the blanks. The data are reported as front (particulate and filter components) and back (impingers). There are no regulatory limits for metal concentrations in these sample media. However, the concentrations of most metals were near or below the applicable method detection limits. Complete tabulations of reduced data and calculations of concentrations for the train samples are provided in Appendix L.

The detection limits for metals in the stack gas are listed in Table 5-56. The detection limit for mercury in Test Run 4 is higher than Test Runs 1-3 because a smaller sample was available for analysis.

The results of the analyses of DUN process samples for metals are given in Table 5-57 through 5-59. No detectable concentration of arsenic, beryllium, lead, silver or thallium was found in the liquid process samples.

In the quench liquid samples, nine of the eighteen metals tested were above their detectable limits. Only three of these nine metals are TCLP metals. The remaining six present were non-TCLP metals. All three TCLP metals present were less than 5% of the regulatory limits.

The process water samples tested showed the presence of only two metals (mercury and tin) of the eighteen metals tested. Both metals detected were just barely above their detectable limits and each was found in only one sample.

The fuel oil samples tested indicated the presence of four metals (antimony, chromium, selenium and tin) of the eighteen tested. All metals present were just above their detectability limits.

The source of chromium in the quench liquid could be from the refractory material. Seven other metals present in quench liquid (namely, barium, cadmium, copper, lead, nickel, vanadium and zinc) have also been identified in the dunnage fed to the incinerator. These metals are probably present in the wood from the preservative used to treat the dunnage. The only metal in quench liquid whose source cannot be identified is cobalt.

The results of the analyses of the ash samples from the furnace and baghouse are given in Table 5-60. The samples tested were composites of the four test runs. No detectable concentration of mercury or thallium was found. Beryllium was found in the furnace ash, but not in the baghouse ash. The quantity found was only slightly above the detection limit. Silver was found in the baghouse ash, but not in the furnace ash.

In the furnace ash sample, the TCLP limits are exceeded for antimony, arsenic, cadmium, lead and selenium. In the baghouse ash, arsenic, cadmium, chromium, lead, selenium and silver exceed the TCLP limits. Of the sixteen metals identified in the furnace ash and baghouse ash, seven metals (barium, cadmium, copper, lead, nickel, vanadium and zinc) could be identified as originating from the dunnage feed.

5.7.2 Sample Calculations

5.7.2.1 Stack Emissions (Test Run 1 Barium) (Sample No. DUN1-MT-017/018)

Calibration Curve Statistics

Slope:	0.3740
Intercept:	0.0006

Emission Intensities

Barium at Line 233:	10634
Scandium at Line 255:	292233
Ba/Sc ratio:	0.0358

Barium in μg/mL

(Ba/Sc ratio - Intercept)/slope
(0.0358 - 0.0006)/0.3740 = 0.0941

Original Sample Volume:	980 mL
Volume Withdrawn for Hg Analysis:	50 mL
Volume Digested for Metals:	930 mL
Final Digestate Volume:	100 mL

Barium in μg

(0.0941 μg/mL)(980 mL/930 mL)(100 mL) = 9.91 μg

The front half and back half samples are individually blank corrected prior to summing and calculating the concentration in the stack gas. Sample values were corrected only if they exceeded blank train data by 10%.

Front (M5AT data):	8.70 μg - 1.1(26.8 μg) → 0 μg
Back (MMT data):	9.91 μg - 1.1(0 μg) → 9.91 μg

Because the front is from the M5AT and the back is from the MMT (sample volumes of the M5AT and MMT are different), separate stack gas concentrations must be calculated and then added together. (For Test Runs 3 and 4, which are exclusively MMT data, the blank corrected front and back are added then divided by the sample volume to obtain the concentration. The procedure for Test Runs 3 and 4 is identical to that described in Section 5.3 for the semivolatile organics.)

Front: $\frac{0\ \mu g}{1.589\ dscm} = 0\ \mu g/dscm$

Back: $\frac{9.91\ \mu g}{1.751\ dscm} = 5.659\ \mu g/dscm$

Total: 0 μg/dscm + 5.659 μg/dscm = 5.659 μg/dscm

5.7.2.2 Stack Emissions of MMT Mercury (DUN2-MT-101-102)

Raw Concentration = 1.18 ppb

Corrected concentration, ppm

$$= \text{ppb} \times \frac{\text{Total Volume}}{\text{Volume Taken}} \times \frac{1\ \text{L}}{1000\ \text{mL}}$$

$$= 1.18\ \frac{\mu g}{L} \times \frac{100\ \text{mL}}{100\ \text{mL}} \times \frac{1\ \text{L}}{1000\ \text{mL}}$$

$= 0.001\ \mu g/mL$

Total Weight, μg = Corrected concentration, ppm x Total Sample Volume

$= 0.001\ \mu g/mL \times 615\ mL$

$= 0.615\ \mu g$

Mercury results by cold vapor-AA are expressed as the weight (in μg) of mercury in the total original volume of the sample. All mercury standards are made up to 100 mL volume, and thus an aliquot of similar volume is taken from the actual sample. If a 100-mL aliquot is removed from a 600-mL sample and gives a result of 1.2 $\mu g/L$, then total μg Hg = 1.2 $\mu g/L$ x 0.6 L = 0.72 μg Hg.

Matrix Spikes and Spike Duplicates:

Spike recoveries are calculated by:

$$\%\ \text{Recovery} = \frac{\text{Conc. of spiked sample} - \text{Conc. of unspiked sample}}{\text{Spike conc. level}} \times 100\%$$

5.7.2.3 Process Samples

Element concentrations in process samples are determined with the use of linear-regression analysis, which is normally performed by the ICP and printed in report format. Mercury linear-regression analyses were hand-calculated and are documented in SRI notebooks.

5.8 REACTIVITY AND pH ANALYSIS

The pH levels of the process samples were measured with a pH combination glass electrode, in the SRI laboratory.

The reactivity of the liquids and ash was measured by Environmental Services Laboratory of Birmingham, AL. The method for cyanide was SW-846 Method 9010 and the method for sulfide was SW-846 Method 9030. No cyanide was found in any samples. The levels of sulfide detected are indicative of a reactive waste.

Table 5-61 shows the results of reactivity and pH analysis of aqueous process samples. Table 5-62 gives the reactivity results for the furnace ash and baghouse ash.

5.9 PARTICULATE MEASUREMENTS

5.9.1 Emission Rate

Measurements of particle concentrations were made on samples from the MMT and M5AT. The acetone probe rinse and the filter from each run were dried to a constant weight before they were analyzed. The trains passed all required pre-test and post-test leak checks of the pitot tube and sampling system.

Particulate concentrations (corrected to 7% O_2) in the four DUN test runs were, respectively, 4.487, 3.849, 2.309 and 3.287 mg/dscm from the M5AT results and 3.553, 3.207, 3.812 and 28.701 mg/dscm from the MMT results. Hence, the DUN particulate emission levels were well below the RCRA particulate limit of 180 mg/dscm. The corresponding measured particulate concentrations (corrected to 12% CO_2) were 5.539, 4.356, 2.658 and 3.770 mg/dscm from the M5AT and 4.034, 3.641, 4.356 and 33.143 mg/dscm from the MMT. This is not a RCRA requirement but is an alternative manner of reporting particulate results for certain state agencies.

The higher particulate data for the MMT Test Run 4 resulted from starting the pulse air in the baghouse. This resulted in entrainment of the particulates in the gas stream. At the same time, the filter bags suffered a loss of filtration effectiveness. This combination of excessive particulate loading in the gas stream and just cleaned bags resulted in an unusually large quantity of particulates exhausting into the stack.

Although the particulate concentration during the bag cleaning cycle was higher, it was still less than 17% of the allowable limit.

5.9.2 Particle Size Distribution

Two particle sizing runs were made. The first was made through the entire duration of the first test. The stage weights from that run were found to be too low to be weighed reliably, so the second sample was run during tests 2, 3 and 4. The results from the second sizing run are shown in Figures 5-4, 5-5 and 5-6. The mass median diameter (MMD) was found to be approximately six micrometers. Although the data quality from the first run was not as good as that from the second, the MMD from it was also approximately six micrometers. The particulate concentration calculated from the second run was 2.84 mg/dscm (.00124 grains/dscf) which was comparable to the concentrations obtained from the Method 5 trains. Detailed results can be found in Appendix D.

5.10 CHEMICAL AGENT - POHC

5.10.1 Results

The primary organic hazardous constituent (POHC) for this trial burn was agent GB drained from M55 rockets, which were processed separately through the Deactivation Furnace System. Feed rate for the four test runs was 10.3 lb/hr.

No agent was detected in the stack gas. The detection limit at the stack ACAMS station was 0.00006 mg/m^3. This detection limit is verified by daily ACAMS challenges, the results of which can be found in Appendix E. The emission rates for each test run corresponding to this detection limit are 1.355×10^{-6}, 1.359×10^{-6}, 1.348×10^{-6} and 1.338×10^{-6} lb/hr for Test Runs 1 through 4 respectively.

All process samples were certified by SwRI to contain less than 20 parts per billion (ppb) of GB.

5.10.2 Destruction and Removal Efficiency

Destruction and Removal Efficiency (DRE) is one of the three fundamental RCRA performance standards mandated for hazardous waste incinerators. All RCRA regulated hazardous waste incinerators must achieve at least 99.99% DRE for the POHC identified in the incinerator waste feed stream. Agent GB was used as the POHC for the DUN trial burn. DRE is a straight forward calculation using the following formula:

$$DRE = \frac{W_{(in)} - W_{(out)}}{W_{(in)}} \times 100\%$$

Where $W_{(in)}$ is the quantity of Agent GB in the hazardous waste fed into the system and $W_{(out)}$ is the emission rate of Agent GB measured in the stack gas prior to release to the atmosphere.

Agent GB is continuously monitored in the stack gases and is expressed as a concentration in the total exhaust stream (i.e., mg/m^3). Other monitoring systems measure the total flow of exhaust gases. Based on these values, the Agent GB mass emission [$W_{(out)}$] in the stack gases for the trial run can be determined.

Stack concentrations of Agent GB were not detected during any of the four test runs. However, in order to be able to calculate the DRE, a valid means of quantifying an emission value must be employed. The sensitivity (Limit of Quantification) of the GB ACAMS stack monitoring system was one fifth of the ASC (0.0003 mg/m^3) for GB in all four test runs. Based on this level of capability, the actual concentration of GB that might not have been detected was below 0.00006 mg/m^3. Knowing that ACAMS did not detect any GB, the stack concentration must have always been below this value. Using the specific LOQ based emission rate as a maximum concentration value of GB in the stack gas, a relative hourly emission rate can be calculated based on the stack flow. Using Test Run #1 data:

GB maximum outlet concentration = <0.00006 mg/m^3
Calculated stack flow = 6,029 acfm (Avg. of M5AT & MMT)
Agent feed rate = 10.3 lb/hr

$$\text{Hourly emission} < \frac{.00006\ \text{mg}}{\text{m}^3} \times \frac{1\ \text{m}^3}{35.31\ \text{ft}^3} \times \frac{1\ \text{lb}}{453{,}600\ \text{mg}} \times \frac{6{,}029\ \text{ft}^3}{1\ \text{min}} \times \frac{60\ \text{min}}{\text{hr}}$$

Hourly emission < 0.000001355 lb/hr

Using this hourly emission to calculate DRE:

$$\text{DRE} \geq \frac{10.3\ \text{lb/hr} - 0.000001355\ \text{lb/hr}}{10.3\ \text{lb/hr}} \times 100\%$$

$$\text{DRE} \geq 99.9999868\%$$

The same approach, using test run specific data, was used to calculate the DRE for each of the remaining three test runs. Results of the DRE determination are shown in Table 5-63. The DREs were all substantially greater than the RCRA requirement of 99.99%.

5.11 TOTAL HYDROCARBONS

Total hydrocarbons (THC) in the stack gas were determined by EPA Method 25A. The condensate was analyzed for hydrocarbons using Method 503. The results are presented in Table 5-64.

This data was taken to characterize the emissions. It is not subject to any regulatory limits. Although there are no applicable statutory limits, the EPA has established a guidance limit of 20 ppm by volume (ppmv). The data shows that THC emissions from the DUN were consistently less than half of this guidance limit.

5.11.1 Sample Calculations

Test Run 1

Total Hydrocarbons = 8.5 + 0 = 8.5 ppm

(Hydrocarbons in the condensate is assumed to be zero, since it is less than the detectable limit.)

Gas Flow (from Appendix F) = 2796 dscfm

Molecular Weight of Propane = 44

Volume of 1 lb mol of gas = 359 ft^3 (@ 32°F and 1 atm.)

Hydrocarbon Emission Rate

$$= 8.5 \times 10^{-6} \times \frac{2796\ \text{ft}^3}{\text{min}} \times \frac{44\ \text{lbs}}{359\ \text{ft}^3} \times \frac{(460 + 32)^\circ\text{F}}{(460 + 68)^\circ\text{F}} \times \frac{60\ \text{min.}}{1\ \text{hr.}}$$

= 0.16 lbs/hr

TABLE 5-1
DUN PDAR DATA

No.	I.D.	Parameter	Units	Test 1 – Dec. 5, 1994			Test 2 – Dec 6, 1994			Test 3 – Dec. 7, 1994			Test 4 – Dec. 8, 1994			Permit Limits	
				Max	Min	Average	Max	Min	Average	Max	Min	Average	Max	Min	Average	Max	Min
1	07-PDIC-60	DUN Furnace Room to Ambient Differential Pressure	In. WC	-0.6	-0.2	-0.48	-0.7	-0.2	-0.5	-0.6	-0.1	-0.47	-0.6	-0.1	-0.46		
2	07-PI-60	DUN-BLOW-101 Discharge Pressure	PSI	1.6	1.5	1.57	1.6	1.5	1.56	1.6	11.5	1.55	1.6	1.5	1.51		
3	07-FIT-102	Combustion Air Flow to Primary Burner #1	SCFH	6434	6142	6296.2	6444	6134	6285.4	6419	6130	6291.9	6422	6123	6279.8		
4	07-FIT-122	Combustion Air Flow to Primary Burner #2	SCFH	5911	1979	2171.3	5837	2050	2164.9	5849	2049	2212.5	5859	1978	2145.7		
5	07-FIT-142	Combustion Air Flow to Primary Burner #3	SCFH	6032	720.03	3080.1	6006	883	3184.3	6003	867	3174.4	5991	867	2845.5		
6	07-FIT-162	Combustion Air Flow to Primary Burner #4	SCFH	5770	1884	2003.7	5682	1791	1934.3	5680	1831	2010.7	5713	1797	1908		
7	07-PIC-39	Primary Chamber Pressure	In. WC	-0.75	-5.21	-2.58	-0.98	-4.97	-2.57	-0.68	-5.28	-2.57	-0.97	-5.59	-2.57	0	
8	07-TI-60	Primary Blower Discharge Temperature	F	153	145	149.7	156	145	154.1	158	149	155.8	158	151	156.5		
9	07-TIC-42A/B	Primary Chamber Temperature	F	1899	1375	1676.5	1905	1401	1694.4	1968	1351	1690.9	1956	1387	1674	2100	1200
10	07-TIC-61	DUN Room Temperature	F	115	113	113.4	120	116	119.5	122	120	121.4	122	119	120.9		
11	07-FIT-106	Fuel Oil Flow to Primary Burner #1	GPH	0	0	0	0	0	0	0	0	0	0	0	0		
12	07-FIT-126	Fuel Oil Flow to Primary Burner #2	GPH	4.5	1.5	1.52	4.5	1.5	1.53	4.5	1.5	1.54	4.5	1.5	1.52		
13	07-FIT-146	Fuel Oil Flow to Primary Burner #3	GPH	0.1	0	0.015	0.1	0	0.016	0.1	0	0.016	4.3	0	0.07		
14	07-FIT-166	Fuel Oil Flow to Primary Burner #4	GPH	4.5	1.1	1.128	4.5	1.1	1.129	4.5	1.1	1.151	4.5	1.1	1.117		
15	07-AIT-37	Primary Chamber Oxygen	%	19.63	0	10.13	19.78	0	10.01	19.27	0	9.35	19.26	0	10.66		
16	07-TI-216	Afterburner Blower Discharge Temperature	F	106	98	102.7	110	101	104	107	98	102.7	107	98	102.5		
17	07-PI-201	Afterburner Pressure	In. WC	-1.35	-5	-3.37	-1.74	-5	-3.37	-1.42	-5	-3.35	-1.53	-5	-3.31		
18	07-PI-215	Afterburner Blower Discharge Pressure	PSI	1.6	1.5	1.54	1.6	1.5	1.53	1.6	1.5	1.54	1.6	1.5	1.53		
19	07-FIT-186	Fuel Oil Flow to Afterburner #1	GPH	4	1.3	2.8	4	1.3	2.8	4	1.3	2.8	4	1.3	2.6		
20	07-FIT-384	Fuel Oil Flow to Afterburner #2	GPH	4	2.3	3.04	4	2.2	3.04	4	2.3	3.07	4	2.3	2.98		
21	07-FIT-387	Fuel Oil Flow to Afterburner Auxiliary Nozzles	GPH	28	11	21.81	28	11	21.9	28	11	22	28	11	20.7		
22	07-FIT-182	Combustion Air Flow to Afterburner #1	SCFH	5600	2773	4822.7	5600	2776	4847	5600	2641	4887.2	5600	2652	4615.5		
23	07-FIT-383	Combustion Air Flow to Afterburner #2	SCFH	5407	4570	5098.5	5445	4633	5097.9	5409	4651	5126.2	5448	4689	5139.3		
24	07-FIT-388	Combustion Air Flow to Afterburner Auxiliary Nozzles	SCFH	27000	21442	26702	27000	21963	26785	27000	21145	26772	27000	2090	26492		
25	07-FIT-372	Main Air to Afterburner	SCFM	2021	0	930.2	2051	0	956.5	2033	1	975.9	2047	0	835.3		
26	07-TI-56	Afterburner Temperature	F	2041	1895	1972.7	2043	1900	1974.7	2043	1884	1973.3	2043	1881	1976.6	2200	1800
27	07-TI-38	Afterburner Exhaust Duct Temperature	F	1891	1823	1867.9	1892	1825	1869.6	1893	1812	1868.6	1891	1809	1867		
28	07-AIT-40	Afterburner Oxygen	%	13.26	8.54	10.58	13.17	8.54	10.47	17.43	8.34	10.37	13.76	8.58	10.68	14	8
29	07-AIT-201	Afterburner CO (@ 7% O2)	PPM	328	0	34.6	59	34	42.4	119	22	43	54	28	40.03		
30	07-AIT-201	Afterburner CO (@ 7% O2) hourly average	PPM	37.02	32.1	34.68	44.1	39	42.7	46.1	40.1	43.1	44.2	33	40.4	100	
31	07-AIT-201	Afterburner CO (@ 7% O2) 5 min. average	PPM	62.2	30.4	34.5	46	37.7	42.5	46.5	38.7	42.9	46.2	31.9	40.1	200	
32	24-TI-438	Quench Tower Inlet Temperature	F	1738	1673	1716	1740	1675	1719.5	1752	1677	1721.5	1745	1670	1713		
33	24-TI-165	Quench Tower Exhaust Temperature	F	390	351	370.7	389	351	370.3	389	351	370.1	389	351	367	475	-
34	24-PDI-168	Baghouse Differential Pressure	In. WC	2.3	0.8	1.57	9.2	0.9	1.83	3	1	2.08	3.1	0.2	1.21	20	0.5
35	24-AIT-363	Stack SO2	PPM	14.3	2.4	4.8	15.2	1.8	4.1	28.4	0	7.6	21	2	6.93		
36	24-AIT-364	Stack NOx	PPM	299.8	41.5	97.8	320.9	46	98.9	349	1.2	97.6	544	0	105		
37	ACAM-130	DUN Stack ACAM	ASC	0.01	0	0.00154	0.01	0	0.00001	0	0	0	0.01	0	0.000075	1	
38	ACAM-109	DUN Quench Vent ACAM	ASC	0.04	0	0.033	0.04	0.03	0.032	0.04	0.03	0.032	0.04	0.03	0.032		

16-Mar-95
v:\home\70326\graphics\data\maxmin2.wk3

TABLE 5-2

PROCESS DATA FROM MANUAL STACK SAMPLING[a]

	Test Run			
	1	2	3	4
Gas Flow, acfm	6029	6046	6001	5953
Gas Flow, dscfm	2918	2870	2805	2870
Gas Temperature, °F	231	237	235	231
Percent Moisture	37.0	37.8	38.95	37.3
Percent O_2 (dry)	10.9	11.2	11.3	11.4
Percent CO_2 (dry)	7.6	7.45	7.25	7.15
Total Gas Flow, lb/hr	18,220	18,089	17,890	17,951
Dry Gas Flow, lb/hr	13,481	13,256	12,944	13,239

[a]Averages of M5AT, and MMT results.

TABLE 5-3

INTEGRATED[a] ORSAT STACK DATA

Date	Time	Carbon Dioxide (% Vol.)	Oxygen (% Vol.)	Nitrogen[b] (% Vol.)
12/5/94	1415 - 1515	7.5	11.0	81.5
	1518 - 1618	7.5	11.0	81.5
	1645 - 1745	8.0	10.6	81.4
	1748 - 1848	7.4	11.0	81.6
12/6/94	1021 - 1121	7.0	11.6	81.4
	1124 - 1224	8.0	10.6	81.4
	1245 - 1345	7.8	10.8	81.4
	1347 - 1447	7.0	11.6	81.4
12/7/94	1032 - 1132	7.0	11.6	81.4
	1132 - 1355[c]	--	--	--
	1355 - 1443	7.0	11.6	81.4
	1512 - 1612	8.0	10.4	81.6
	1614 - 1714	7.0	11.6	81.4
12/8/94	0917 - 1017	7.0	11.6	81.4
	1020 - 1120	7.2	11.4	81.4
	1203 - 1303	7.4	11.0	81.6
	1305 - 1405	7.0	11.6	81.4

[a]Average of M5AT, MMT and MM5 measurements
[b]Obtained by difference
[c]Sampling interrupted

TABLE 5-4

COMPOSITION OF TYPICAL DUN WASTE FEED CHARGE[a]

Agent (GB)	10.3 lbs (2.25 lbs polyethylene carboy) (15 lbs Absorbent Material - cellulose)
Dunnage (Wood)	260 lbs[b]
DUN Waste Feedbox (Cardboard)	50 lbs
Total	337.55 lbs

DUNNAGE METALS CONCENTRATION	ppm
Antimony	<1
Arsenic	<1
Barium	9.7
Beryllium	<2
Cadmium	1.1
Chromium	<2
Cobalt	2
Copper	2.03
Lead	20
Manganese	96.7
Mercury	<1
Nickel	4.5
Selenium	<1
Silver	<2
Thallium	<1
Tin	<20
Vanadium	3.1
Zinc	25

[a]Waste feed to the dunnage Incinerator is a batch operation. Waste charges are fed to the incinerator at one hour intervals.
[b]The wood was free of agent contamination, but may have been treated with a preservative. An unknown quantity of steel nails, staples and other metallic fastening devices were embedded in, or mixed with, the wood.

TABLE 5-5

MODIFIED METHOD 5 TRAIN CONDITIONS AND RESULTS

		Test Run			
Parameter	Units	1	2	3	4
Date		12/5/94	12/6/94	12/7/94	12/8/94
Sample Time	minutes	240	240	240	240
Sample Volume	dscf dscm	112.32 3.18	151.14 4.28	143.53 4.06	144.47 4.09
Stack Gas Flow Rate	dscfm	2796	2923	2929	2875
Stack Gas Temperature	°F	233	241	239	232
Stack Gas Moisture	%	37.2	37.8	37.52	36.93
Percent Isokinetic	%	111.4	102.4	97.0	99.5
Oxygen Concentration[a]	%	10.9	11.1	11.3	11.4
CO_2 Concentration[a]	%	7.6	7.5	7.3	7.2
Leak Checks:					
Pitot Pre Test		Pass	Pass	Pass	Pass
Pitot Post Test		Pass	Pass	Pass	Pass
Train Pre Test	cfm at in. Hg	0.007 15	0.005 15	0.002 15.5	0.010 15
Train Post Test	cfm at in. Hg	0.002 12	0.000 21	0.002 17.5	0.000 21

[a]Gas composition from Orsat analysis.

TABLE 5-6

STACK GAS ANALYSES FOR SEMIVOLATILE PRODUCTS OF INCOMPLETE COMBUSTION RCRA COMPOUNDS AND ADDITIONAL CLEAN AIR COMPOUNDS

	TEST RUN			
	1	2	3	4
Sample Volume (dscm)	3.18	4.28	4.06	4.09
EMITTED SUBSTANCES	Concentration[a], μg/dscm			
Benzoic Acid	28	ND[b]	18	33
Bis(2-ethylhexyl)phthalate	7.5	4.7	ND	ND

[a]Values corrected using blank train results.
[b]ND = Not detected. Detection limits for semivolatile organics are given in Table 5-8.

TABLE 5-7

SEMIVOLATILE RESULTS SUMMARY FOR MM5 TRAIN

Sample Description	Sample (Run) No.	Target Compound	Amount, μg
BLANK TRAIN			
Filter and Front Wash	SVO-352	--	ND[a]
Resin and Back Wash	DUNB-SVO-364	--	ND
TEST RUN 1			
Filter and Front Wash	SVO-028	Bis(2-ethylhexyl)phthalate	23.8
Resin and Back Wash	SVO-040	Benzoic Acid	88.5
TEST RUN 2			
Filter and Front Wash	SVO-109	--	ND
Resin and Back Wash	SVO-121	Bis(2-ethylhexyl)phthalate	20.1
TEST RUN 3			
Filter and Front Wash	SVO-190	--	ND
Resin and Back Wash	SVO-202	Benzoic Acid	74.6
TEST RUN 4			
Filter and Front Wash	SVO-271	--	ND
Resin and Back Wash	SVO-283	Benzoic Acid	136

[a]ND = None detected; detection limits provided in Table 5-8.

TABLE 5-8

STACK GAS SEMIVOLATILE COMPOUNDS
DETECTION LIMITS

Compound	µg	µg/dscm[a]
RCRA COMPOUNDS		
aniline	10	2.596
phenol	10	2.596
bis(2-chloroethyl)ether	6	1.558
2-chlorophenol	10	2.596
1,3-dichlorobenzene	10	2.596
1,4-dichlorobenzene	10	2.596
1,2-dichlorobenzene	10	2.596
benzyl alcohol	10	2.596
bis(2-chloroisopropyl)ether	6	1.558
2-methylphenol	10	2.596
n-nitroso-di-n-propylamine	10	2.596
4-methylphenol	10	2.596
hexachloroethane	6	1.558
nitrobenzene	10	2.596
isophorone	10	2.596
2-nitrophenol	6	1.558
2,4-dimethylphenol	10	2.596
bis(2-chloroetoxy)methane	6	1.558
2,4-dichlorophenol	12	3.115
1,2,4-trichlorobenzene	6	1.558
benzoic acid	15	3.894
naphthalene	6	1.558
4-chloroaniline	10	2.596
hexachlorobutadiene	6	1.558
4-chloro-3-methylphenol	10	2.596
2-methylnapthalene	6	1.558
hexachlorocyclopentadiene	10	2.596

TABLE 5-8

STACK GAS SEMIVOLATILE COMPOUNDS
DETECTION LIMITS

Compound	μg	μg/dscm[a]
2,4,6-trichlorophenol	15	3.894
2,4,5-trichlorophenol	15	3.894
2-chloronaphthalene	6	1.558
3-nitroaniline	6	1.558
dimethylphtalate	6	1.558
2,6-dintrotoluene	6	1.558
acenaphthylene	10	2.596
2-nitroaniline	6	1.558
acenaphthene	10	2.596
2,4-dinitrophenol	15	3.894
dibenzofuran	6	1.558
4-nitrophenol	10	2.596
2,4-dintrotoluene	6	1.558
diethylphthalate	6	1.558
fluorene	10	2.596
4-chlorophenylphenylether	6	1.558
4-nitroaniline	10	2.596
4,6-dinitro-2-methylphenol	15	3.894
n-nitrosodiphenylamine	6	1.558
4-bromophenol-phenylether	6	1.558
hexachlorobenzene	6	1.558
pentachlorophenol	15	3.894
phenanthrene	6	1.558
anthracene	6	1.558
di-n-butylphthalate	10	2.596
fluoranthene	6	1.558
benzidine	60	15.577
pyrene	10	2.596

TABLE 5-8

STACK GAS SEMIVOLATILE COMPOUNDS
DETECTION LIMITS

Compound	μg	μg/dscm[a]
butylbenzylphthalate	10	2.596
benzo(a)anthracene	6	1.558
3,3'-dichlorobenzidine	15	3.894
chrysene	10	2.596
bis(2-ethylhexyl)phthalate	10	2.596
di-n-octylphthalate	10	2.596
benzo(b)fluoranthene	10	2.596
benzo(k)fluoranthene	10	2.596
benzo(a)pyrene	10	2.596
indeno(1,2,3-cd)pyrene	15	3.894
dibenz(a,h)anthracene	15	3.894
benzo(g,h,i)perylene	15	3.894
ADDITIONAL CLEAN AIR COMPOUNDS		
n-nitroso-methyl ethylamine	20	5.192
acetophenone	20	5.192
n-nitroso-morpholine	20	5.192
o-toluidine	20	5.192
o-anisidine	20	5.192
2,4-diaminotoluene	20	5.192
1-chloronapthalene	20	5.192
azobenzene	20	5.192
4-aminobyphenyl	20	5.192
pentachloronitrobenzene	20	5.192
p-dimethylaminoazobenzene	20	5.192
2-acetylaminofluorine	20	5.192
7,12-dimethylbenzo(a)anthracene	20	5.192
3-methylchloranthrene	20	5.192

[a]Average value for four test runs.

TABLE 5-9

STACK GAS SEMIVOLATILE TENTATIVELY IDENTIFIED COMPOUNDS

Sample Name	Run #	Tentative Compound Name	Amount (μg)	Stack Conc. (μg/m³)
Run 1 Train Front DUN1-SVO-028	H04060	methanone, dicyclopropyl-	7.17	2.25
Run 1 Train Back DUN1-SVO-040	H04051	unknown	66.2	20.81
		hydroperoxide, 1,1-dimethylethyl-	1370	430.68
		3-cyclohexen-1-ol	21.7	6.82
		4-penten- 2-one, 4-methyl-	47.0	14.78
		2-cyclohexen-1-one	38.0	11.95
		1-propene, 1,2,3-trichloro-	13.0	4.09
		2-butanol,3-methyl-,acetate	20.3	6.38
		unknown	41.0	12.89
		decane, 3,3,4-trimethyl-	38.3	12.04
		cyclohexanol,2-chloro-, trans-	45.9	14.43
		1,2-cyclohexanediol	25.5	8.02
		cyclopropane, 1,1-dimethyl-2-methylene	10.9	3.43
		propanedinitrile, dicyclohexyl-	12.2	3.84
		1,2-benzenediol, (1,1-dimethylethyl)-	7.63	2.40
		2-propanol,1-[2-(2-methoxy-1-methoxy)-1-methylethoxy]-	18.2	5.72
		2,5,8,11-tetraoxatetradecan-13-ol, 4.7,10-trimethyl	58.2	18.30
		nonamide	26.2	8.24
		hexanedioic acid, dioctyl ester	10.5	3.30
		oxirane, 3-ethyl-2,2-dimethyl-	19.2	6.04
		1,5-heptadiene, 3,3,6-trimethyl	12.7	3.99

TABLE 5-9

STACK GAS SEMIVOLATILE TENTATIVELY IDENTIFIED COMPOUNDS

Sample Name	Run #	Tentative Compound Name	Amount (μg)	Stack Conc. (μg/m³)
Run 2 Train Front DUN2-SVO-109	H04071	unknown	10.4	2.43
		silane, (2-methoxyethoxy) trimethyl-	4.82	1.13
		silane, dimethyldi-2-propenyl-	7.04	1.64
		cyclohexanol, 2-chloro-, trans-	6.46	1.51
		cyclohexanol, 1-ethyl-	6.44	1.50
		bi-2-cyclohexen-1-yl	4.21	0.98
		2,6,10-dodecatrien-1-ol, 3,7,11-trimethyl-,[Z,E]-	6.37	1.49

TABLE 5-9

STACK GAS SEMIVOLATILE TENTATIVELY IDENTIFIED COMPOUNDS

Sample Name	Run #	Tentative Compound Name	Amount (μg)	Stack Conc. (μg/m³)
Run 2 Train Back DUN2-SVO-121	H04071	hydroperoxide, 1-methylethyl	94.9	22.17
		2-pentanone, 4-hydroxy-4-methyl-	1900	443.93
		7-oxabicyclo[4.1.0]heptane	42.2	9.86
		2-cyclohexen-1-ol	11.5	2.69
		ethanol, 1,1'-oxybis-, diacetate	47.1	11.00
		butanoic acid, 3-methyl-, 3-methyl-3-butenyl ester	19.2	4.49
		1-propene, 1,1,2-trichloro-	16.0	3.74
		benzeneacetic acid, α-oxo-, ethyl ester	39.6	9.25
		1,3-dioxolane-2-ethanol, 2-methyl-	27.3	6.38
		3-pentenoic acid, 4-methyl-	35.1	8.20
		1,2-cyclohexanediol, 1-methyl-, trans-	17.6	4.11
		cyclohexanol, 2-chloro-, trans-	40.7	9.51
		3,6-pyridazinedione, 1,2-dihydro-4-methyl-	17.1	4.00
		2-hexene, 4,4,5-trimethyl-	21.5	5.02
		3-pyridazinamine, 6-chloro-	10.7	2.50
		butanamide, 3-methyl-	69.0	16.12
		adipamide	20.6	4.81
		hexanedioic acid, dioctyl ester	18.8	4.39
		silacycloundec-6-yne, 1,1-dimethyl-	19.2	4.49
		ribitol, pentaacetate	13.1	3.06

TABLE 5-9

STACK GAS SEMIVOLATILE TENTATIVELY IDENTIFIED COMPOUNDS

Sample Name	Run #	Tentative Compound Name	Amount (μg)	Stack Conc. (μg/m³)
Run 3 Train Front DUN3-SVO-190	H04072	2-pentanol, 3-methyl-	5.70	1.40
		unknown	23.8	5.86
		silane, dimethyldi-2-propenyl-	6.21	1.53
		cyclohexanol, 2-chloro-, trans-	4.19	1.03
		octanoic acid, methyl ester	8.38	2.06
		10-octadecenoic acid, methyl ester	12.0	2.95
		3,7,11-tridecatrienenitrile , 4,8,12-trimethyl-	38.8	9.55
		n-cyano-n',n',n",n"-tetramethyl-1,3,5-triazinetriamine	7.31	1.80
		2-butanamine, hydrochloride	6.24	1.54
		pyrido[2,3-d]pyramidine, 4-phenyl-	4.41	1.09

TABLE 5-9

STACK GAS SEMIVOLATILE TENTATIVELY IDENTIFIED COMPOUNDS

Sample Name	Run #	Tentative Compound Name	Amount (μg)	Stack Conc. (μg/m³)
Run 3 Train Back DUN3-SVO-202	H04054	2,7 octanedione	78.0	19.19
		2-pentanone, 4-hydroxy-4-methyl-	1520	374.02
		2-cyclohexen-1-ol	22.5	5.54
		4-penten-2-one, 4-methyl-	40.2	9.89
		2-cyclohexen-1-one	22.0	5.41
		1-propene, 3,3,3-trichloro-	13.7	3.37
		1,2-propanedione, 1-phenyl-	40.8	10.04
		2-butanol, 3-methyl-, acetate	18.2	4.48
		unknown	34.2	8.42
		carbonic acid, dipentyl ester	12.1	2.98
		cyclohexanol, 2-chloro-, trans-	41.3	10.16
		1,2-cyclohexanediol	13.7	3.37
		cyclopropane, 1,1-dimethyl-2-methyl-2-methylene-	18.0	4.43
		propanedinitrile, dicyclohexyl	13.5	3.32
		3(2H)-pyridazinone, 6-chloro-	7.94	1.95
		2-propanol, 1-[1-methyl-2-(2-propenyloxy)ethoxy]-	10.6	2.61
		2-hydroxy-2,4-dimethyl-3-pentanone	54.2	13.34
		2-propanol, 1-(isooctyloxy)-2-methyl-	15.7	3.86
		hexanedioic acid, dioctyl ester	17.4	4.28
		1,5-heptadiene, 3,3,6-trimethyl-	18.6	4.58

TABLE 5-9

STACK GAS SEMIVOLATILE TENTATIVELY IDENTIFIED COMPOUNDS

Sample Name	Run #	Tentative Compound Name	Amount (μg)	Stack Conc. (μg/m³)
Run 4 Train Front DUN4-SVO-271	H04074	2-hexanone,3-hydroxy-3,5-dimethyl-	21.7	5.30
		nonane	1660	405.77
		furan, 2,3-dihydro-4-methyl-	44.5	10.88
		heptane, 4-methyl-	15.1	3.69
		cyclohexane, 1-methyl-2-propyl-	30.9	7.55
		decane	10.2	2.49

TABLE 5-9

STACK GAS SEMIVOLATILE TENTATIVELY IDENTIFIED COMPOUNDS

Sample Name	Run #	Tentative Compound Name	Amount (μg)	Stack Conc. (μg/m³)
Run 4 Train Back DUN4-SVO-283	H04055	2-pentene, 3,4-dimethyl-, (E)-	89.6	21.90
		2-pentanone, 4-hydroxy-4-methyl-	111	27.13
		2-cyclopenten-1-one, 2-methyl-	17.1	4.18
		nonane	1510	369.10
		2H-pyran, 3,4-dihydro-	27.5	6.72
		ethane, 1,1,2,2-tetrachloro-	12.8	3.13
		furan	14.4	3.52
		cyclohexane, 1,4-dimethyl-, cis-	58.2	14.23
		benzenecarbothioic acid	30.6	7.48
		hexanoic acid, 1-methylethyl ester	14.4	3.52
		undecane	14.1	3.45
		2-hexane, 1-methoxy-, (E)-	14.7	3.59
		cyclohexanol, 2-chloro-, trans-	148	36.18
		2-pentanone, 5-methoxy-	15.5	3.79
		cyclohexane, 1,2-dichloro-, trans-	67.0	16.38
		7-octen-2-one, 6-methyl-	18.9	4.62
		2-hexene, 4,4,5-trimethyl-	51.5	12.59
		bi-2-cyclohexen-1-yl	13.7	3.35
		hexadecanoic acid	22.2	5.43
		cyclooctanemethanol, α,α-dimethyl-	34.2	8.36

TABLE 5-10

SEMIVOLATILE RESULTS IN ASH SAMPLES

Sample ID	Sample No.	Compound	Concentration, μg/kg
Ash Extraction Blank	Run No. H04082	--	ND[a]
Furnace Ash	SVO-392	bis(2-ethylhexyl)phthalate	1640
Baghouse Ash	SVO-936	--	ND

[a]ND = None detected.

TABLE 5-11

SEMIVOLATILE TENTATIVELY IDENTIFIED COMPOUNDS
IN ASH SAMPLES

Sample Name	Sample No..	Tentative Compound Name	Amount (μg/kg)
Baghouse Ash	DUN4-SVO-936	nonane	158,000
		2,6,10-dodecatrien-1-ol, 3,7,11-trimethyl-,[Z,E]-	545
Furnace Ash	DUN4-SVO-392	propanoyl chloride, 2-methyl-	646
		nonane	249,000
		hexanoic acid, 1,2,3-propanetriyl ester	1040
		acenaphthylene	671
		1,2-benzenedicarboxylic acid, diisooctyl ester	7610

TABLE 5-12

PROCESS SAMPLES
SEMIVOLATILE RESULTS SUMMARY
RCRA COMPOUNDS AND ADDITIONAL CLEAN AIR COMPOUNDS
TEST RUN 1

Sample ID	Sample (Run) No.	Compound	Concentration, μg/L
Quench Liquid Pre Test	DUN1-SVO-079	--	ND[a]
Quench Liquid Post Test	DUN1-SVO-998	--	ND
Process Water Pre Test	(Not Sampled)		
Process Water Post Test	(Not Sampled)		
Liquid Extraction Blank	(H04090)	--	ND
Fuel Oil Pre Test	DUN1-VO-076	--	ND
Fuel Oil Post Test	DUN1-VO-991	--	ND
Fuel Oil Lab Blank	(H04122)	--	ND

[a]ND = None detected; detection limits provided in Appendix J.

TABLE 5-13

PROCESS SAMPLES
SEMIVOLATILE RESULTS SUMMARY
RCRA COMPOUNDS AND ADDITIONAL CLEAN AIR COMPOUNDS
TEST RUN 2

Sample ID	Sample (Run) No.	Compound	Concentration, μg/L
Quench Liquid Pre Test	DUN2-SVO-160	--	ND[a]
Quench Liquid Post Test	DUN2-SVO-989	--	ND
Process Water Pre Test	(Not Sampled)		
Process Water Post Test	(Not Sampled)		
Liquid Extraction Blank	(H04090)	--	ND
Fuel Oil Pre Test	DUN2-VO-157	--	ND
Fuel Oil Post Test	DUN2-VO-158	--	ND
Fuel Oil Lab Blank	(H04122)	--	ND

[a]ND = None detected; detection limits provided in Appendix J.

TABLE 5-14

PROCESS SAMPLES
SEMIVOLATILE RESULTS SUMMARY
RCRA COMPOUNDS AND ADDITIONAL CLEAN AIR COMPOUNDS
TEST RUN 3

Sample ID	Sample (Run) No.	Compound	Concentration, μg/L
Quench Liquid Pre Test	DUN3-SVO-241	--	ND[a]
Quench Liquid Post Test	DUN3-SVO-983	--	ND
Process Water Pre Test	DUN3-SVO-977	--	ND
Process Water Post Test	DUN3-SVO-974	--	ND
Liquid Extraction Blank	(HO4090)	--	ND
Fuel Oil Pre Test	DUN3-VO-238	--	ND
Fuel Oil Post Test	DUN3-VO-239	--	ND
Fuel Oil Lab Blank	(HO4122)	--	ND

[a]ND = None detected; detection limits provided in Appendix J.

TABLE 5-15

PROCESS SAMPLES
SEMIVOLATILE RESULTS SUMMARY
RCRA COMPOUNDS AND ADDITIONAL CLEAN AIR COMPOUNDS
TEST RUN 4

Sample ID	Sample (Run) No.	Compound	Concentration, µg/L
Quench Liquid Pre Test	DUN4-SVO-323	--	ND[a]
Quench Liquid Post Test	DUN4-SVO-967	--	ND
Process Water Pre Test	DUN4-SVO-961	--	ND
Process Water Post Test	DUN4-SVO-958	--	ND
Liquid Extraction Blank	(HO4090)	--	ND
Fuel Oil Pre Test	DUN4-VO-319	--	ND
Fuel Oil Post Test	DUN4-VO-320	--	ND
Fuel Oil Lab Blank	(HO4122)	--	ND

[a]ND = None detected; detection limits provided in Appendix J.

TABLE 5-16

SEMIVOLATILE TENTATIVELY IDENTIFIED COMPOUNDS
IN QUENCH LIQUID SAMPLES

Sample Name	Sample No.	Tentative Compound Name	Amount (μg/L)
Run 1 Quench Liquid Post	DUN1-SVO-998	2-pentanone, 4-hydroxy-4-methyl-	131
		7-oxabicyclo[4.1.0]heptane	79.8
		2-cyclohexen-1-ol	33.7
		nonane	2970
		2-cyclohexen-1-one	41.9
		1-propene, 1,1,2-trichloro-	30.7
		cyclohexanol, 2-bromo-, trans-	39.2
		N,N'-bis(2,6-dimethyl-6-nitrosohept-2-en-4-one	25.8
Run 2 Quench Liquid Post	DUN2-SVO-989	2,7-octanedione	12.6
		2-pentanone, 4-hydroxy-4-methyl-	109
		7-oxabicyclo[4.1.0]heptane	72.6
		2-cyclohexen-1-ol	30.9
		nonane	2290
		cevane-3,4,14,15,16,20-hexol,4,9-epoxy-,3-acetate, (3α,4α,15α,16β)	15.4
		2-cyclohexen-1-one	39.5
		1-propene, 1,1,2-trichloro-	17.4
		cyclohexanol, 2-bromo-, cis-	21.6
		propanedinitrile, dicyclohexyl-	23.7

TABLE 5-16

SEMIVOLATILE TENTATIVELY IDENTIFIED COMPOUNDS
IN QUENCH LIQUID SAMPLES

Sample Name	Sample No.	Tentative Compound Name	Amount (μg/L)
Run 3 Quench Liquid Post	DUN3-SVO-983	acetic acid, trifluoro-, anhydride	44.2
		2-pentanone, 4-hydroxy-4-methyl-	284
		7-oxabicyclo[4.1.0]heptane	160
		3-cyclohexen-1-ol	79.1
		hexane, 2-iodo-	31.7
		nonane	6410
		cevane-3,4,14,15,16,20-hexol, 4,9-epoxy-,3-acetate, 3β,4α,15α,16β	33.7
		2-cyclohexen-1-one	107
		1-propene, 1,1,2-trichloro-	34.3
		cyclohexanol, 2-chloro-, trans-	23.9
		cyclohexanol, 2-bromo-, cis-	31.0
		propanedinitrile, dicyclohexyl-	45.3
Run 4 Quench Liquid Post	DUN4-SVO-967	2,7-octadione	24.0
		2-pentaone, 4-hydroxy-4-methyl-	99.9
		7-oxabicyclo[4.1.0]heptane	70.1
		2-cyclohexen-1-ol	34.4
		nonane	2140
		1H-pyrazole	38.8
		1-propene, 1,1,2-trichloro-	25.4
		thiazole, 5-methyl-	12.2
		propanedinitrile, dicyclohexyl-	43.6

TABLE 5-17

STACK GAS ANALYSIS OF DIOXINS AND FURANS

Test Run No.	1	2	3	4
Sample Size (dscm):	3.18	4.28	4.06	4.09
Compound	Concentration (ng/dscm)			
TCDF	1.047	0.780	0.647	0.701
TCDD	0.968	0.706	0.760	0.838
PECDF	1.031	0.734	0.406	1.166
PECDD	0.349	0.537	0.519	0.877
HXCDF	0.786	0.680	0.544	1.005
HXCDD	1.713	1.888	1.791	2.860
HPCDF	0.443	0.423	0.330	0.064
HPCDD	0.770	1.047	0.991	0.953
OCDF	ND[a]	0.044	0.047	0.037
OCDD	0.138	0.126	ND	0.144
2,3,7,8 TCDD Toxicity Equivalent[b]	0.121	0.128	0.106	0.067

[a]ND = Not detected; detection limits are:

TR #1 OCDF 0.063 ng/dscm
TR #3 OCDD 0.049 ng/dscm

[b]Toxicity Equivalence Factors based on EPA Report 625/3-89/16.

TABLE 5-18

DETERMINATION OF TOTAL PCDDs/PCDFs IN MM5 TRAINS

			Amount Found (nanograms)									
Sample No.	Sample Description	SRI Sample No.	TCDF	TCDD	PeCDF	PeCDD	HxCDF	HxCDD	HpCDF	HpCDD	OCDF	OCDD
DUNB-SVO-366	Blank Train Solvent Blank	VO7690	ND[a]	ND	ND	ND	ND	ND	ND	ND	ND	ND
--	SRI Train Ext. Blank 1	VO7576	ND	ND	ND	ND	ND	ND	ND	ND	ND	ND
DUN1-SVO-042	Run 1 Train Solvent Blank	VO7696	ND	ND	ND	ND	ND	ND	ND	ND	ND	ND
DUN1-SVO-043	Run 1 Train Field Blank	VO7589	ND	ND	ND	ND	ND	ND	ND	ND	ND	ND
DUN1-SVO-044	Run 1 Train Filter Blank	VO7682	ND	ND	ND	ND	ND	ND	ND	ND	ND	ND
--	SRI Train Ext. Blank 2	VO7586	ND	ND	ND	ND	ND	ND	ND	ND	ND	ND
DUN3-SVO-123	Run 2 Train Solvent Blank	VO7691	ND	ND	ND	ND	ND	ND	ND	ND	ND	ND
DUN3-SVO-204	Run 3 Train Solvent Blank	VO7714	ND	ND	ND	ND	ND	ND	ND	ND	ND	ND
DUN3-SVO-285	Run 4 Train Solvent Blank	VO7701	ND	ND	ND	ND	ND	ND	ND	ND	ND	ND

TABLE 5-18

DETERMINATION OF TOTAL PCDDs/PCDFs IN MM5 TRAINS

			Amount Found (nanograms)									
Sample No.	Sample Description	SRI Sample No.	TCDF	TCDD	PeCDF	PeCDD	HxCDF	HxCDD	HpCDF	HpCDD	OCDF	OCDD
DUNB-SVO-352	Blank Train Front	V07577	ND[a]	ND	ND	ND	0.22	ND	0.38	ND	ND	ND
DUNB-SVO-314	Blank Train Back	V07578	ND	ND	ND	ND	ND	ND	ND	ND	ND	0.47
DUN1-SVO-028	Run 1 Train Front	V07588	ND	ND	ND	ND	ND	ND	ND	ND	ND	ND
DUN1-SVO-040	Run 1 Train Back	V07587	3.33	3.08	3.28	1.11	2.50	5.45	1.41	2.45	0.19	0.91
DUN2-SVO-109	Run 2 Train Front	V07683	ND	ND	ND	ND	ND	ND	ND	ND	ND	ND
DUN2-SVO-121	Run 2 Train Back	V07693	3.34	3.02	3.14	2.30	2.91	8.08	1.81	4.48	0.19	1.01
DUN3-SVO-190	Run 3 Train Front	V07590	ND	ND	ND	ND	ND	ND	ND	ND	ND	ND
DUN3-SVO-202	Run 3 Train Back	V07684	2.63	3.09	1.65	2.11	2.21	7.28	1.34	4.03	0.19	1.19
DUN4-SVO-271	Run 4 Train Front	V07591	ND	ND	ND	ND	ND	ND	ND	ND	ND	ND
DUN4-SVO-283	Run 4 Train Back	V07685	2.87	3.43	4.77	3.59	4.11	11.7	0.26	3.90	0.15	1.06

[a]ND = Not detected; detection limit is 0.02 ng for TCDFs and TCDDs; 0.10 ng for PeCDFs, PeCDDs, HxCDFs, HxCDDs, HpCDFs, and HpCDDs; and 0.20 ng for OCDFs and OCDDs.

TABLE 5-19

DETERMINATION OF TARGET PCDDs/PCDFs IN MM5 TRAINS

		Amount Found (nanograms)									
Sample No.	Sample Description	2,3,7,8 TCDF	2,3,7,8 TCDD	1,2,3, 7,8- PeCDF	2,3,4, 7,8- PeCDF	1,2,3, 7,8- PeCDD	1,2,3, 4,7,8- HxCDF	1,2,3, 6,7,8- HxCDF	1,2,3, 7,8,9- HxCDF	2,3,4, 6,7,8- HxCDF	1,2,3, 4,7,8- HxCDD
DUNB-SVO-366	Blank Train Solvent Blank	ND[b]	ND	ND	ND	ND	ND	ND	ND	ND	ND
--	SRI Train Ext., Blank 1	ND	ND	ND	ND	ND	ND	ND	ND	ND	ND
DUN1-SVO-042	Run 1 Train Solvent Blank	ND	ND	ND	ND	ND	ND	ND	ND	ND	ND
DUN1-SVO-043	Run 1 Train Field Blank	ND	ND	ND	ND	ND	ND	ND	ND	ND	ND
DUN1-SVO-044	Run 1 Train Filter Blank	ND	ND	ND	ND	ND	ND	ND	ND	ND	ND
--	SRI Train Ext., Blank 2	ND	ND	ND	ND	ND	ND	ND	ND	ND	ND
DUN3-SVO-123	Run 2 Train Solvent Blank	ND	ND	ND	ND	ND	ND	ND	ND	ND	ND
DUN3-SVO-204	Run 3 Train Solvent Blank	ND	ND	ND	ND	ND	ND	ND	ND	ND	ND
DUN3-SVO-285	Run 4 Train Solvent Blank	ND	ND	ND	ND	ND	ND	ND	ND	ND	ND

TABLE 5-19

DETERMINATION OF TARGET PCDDs/PCDFs IN MM5 TRAINS

		Amount Found (nanograms)								
Sample No.	Sample Description	1,2,3,6,7,8-HxCDD	1,2,3,7,8,9-HxCDD	1,2,3,4,6,7,8-HpCDF	1,2,3,4,7,8,9-HpCDF	1,2,3,4,6,7,8-HpCDD	OCDF	OCDD	Surrogate[a] (% Recov.)	2,3,7,8-TCDD Toxicity Equivalent[c]
DUNB-SVO-366	Blank Train Solvent Blank	ND[b]	ND	ND	ND	ND	ND	ND	0.732[a2] (91%)	0
--	SRI Train Ext., Blank 1	ND	ND	ND	ND	ND	ND	ND	0.745[a2] (93%)	0
DUN1-SVO-042	Run 1 Train Solvent Blank	ND	ND	ND	ND	ND	ND	ND	1.04[a2] (130%)	0
DUN1-SVO-043	Run 1 Train Field Blank	ND	ND	ND	ND	ND	ND	ND	1.62[a1] (81%)	0
DUN1-SVO-044	Run 1 Train Filter Blank	ND	ND	ND	ND	ND	ND	ND	0.777[a2] (97%)	0
--	SRI Train Ext., Blank 2	ND	ND	ND	ND	ND	ND	ND	0.710[a2] (89%)	0
DUN3-SVO-123	Run 2 Train Solvent Blank	ND	ND	ND	ND	ND	ND	ND	0.845 (106%)	0
DUN3-SVO-204	Run 3 Train Solvent Blank	ND	ND	ND	ND	ND	ND	ND	1.03 (129%)	0
DUN3-SVO-285	Run 4 Train Solvent Blank	ND	ND	ND	ND	ND	ND	ND	0.925 (116%)	0

TABLE 5-19

DETERMINATION OF TARGET PCDDs/PCDFs IN MM5 TRAINS

		Amount Found (nanograms)									
Sample No.	Sample Description	2,3,7,8 TCDF	2,3,7,8 TCDD	1,2,3, 7,8- PeCDF	2,3,4, 7,8- PeCDF	1,2,3, 7,8- PeCDD	1,2,3, 4,7,8- HxCDF	1,2,3, 6,7,8- HxCDF	1,2,3, 7,8,9- HxCDF	2,3,4, 6,7,8- HxCDF	1,2,3, 4,7,8- HxCDD
DUNB-SVO-352	Blank Train Front	ND[b]	ND	ND	ND	ND	ND	ND	ND	ND	ND
DUNB-SVO-314	Blank Train Back	ND	ND	ND	ND	ND	ND	ND	ND	ND	ND
DUN1-SVO-028	Run 1 Train Front	ND	ND	ND	ND	ND	ND	ND	ND	ND	ND
DUN1-SVO-040	Run 1 Train Back	0.158	0.020	0.199	0.418	ND	0.438	0.267	ND	0.374	ND
DUN2-SVO-109	Run 2 Train Front	ND	ND	ND	ND	ND	ND	ND	ND	ND	ND
DUN2-SVO-121	Run 2 Train Back	0.199	0.021	0.098	0.612	ND	0.226	ND	ND	0.542	ND
DUN3-SVO-190	Run 3 Train Front	ND	ND	ND	ND	ND	ND	ND	ND	ND	ND
DUN3-SVO-202	Run 3 Train Back	0.186	ND	0.169	0.381	ND	0.452	0.269	ND	0.375	ND
DUN4-SVO-271	Run 4 Train Front	ND	ND	ND	ND	ND	ND	ND	ND	ND	ND
DUN4-SVO-283	Run 4 Train Back	0.296	0.021	0.215	ND	ND	0.552	0.299	ND	0.499	ND

TABLE 5-19

DETERMINATION OF TARGET PCDDs/PCDFs IN MM5 TRAINS

		Amount Found (nanograms)								
Sample No.	Sample Description	1,2,3,6,7,8-HxCDD	1,2,3,7,8,9-HxCDD	1,2,3,4,6,7,8-HpCDF	1,2,3,4,7,8,9-HpCDF	1,2,3,4,6,7,8-HpCDD	OCDF	OCDD	Surrogate[a] (% Recov.)	2,3,7,8-TCDD Toxicity Equivalent[c]
DUNB-SVO-352	Blank Train Front	ND[b]	ND	.191	ND	ND	ND	ND	0.780[a2] (98%)	0.000191
DUNB-SVO-314	Blank Train Back	ND	ND	ND	ND	0.132	ND	0.472	1.67[a1] (84%)	0.00179
DUN1-SVO-028	Run 1 Train Front	ND	ND	ND	ND	ND	ND	ND	0.664[a2] (83%)	0
DUN1-SVO-040	Run 1 Train Back	ND	ND	0.709	0.104	1.43	0.185	0.911	1.06[a1] (53%)	0.386
DUN2-SVO-109	Run 2 Train Front	ND	ND	ND	ND	ND	ND	ND	0.649[a2] (81%)	0
DUN2-SVO-121	Run 2 Train Back	0.433	0.441	0.932	0.125	2.11	0.187	1.01	1.41[a1] (72%)	0.549
DUN3-SVO-190	Run 3 Train Front	ND	ND	ND	ND	ND	ND	ND	0.774[a2] (97%)	0
DUN3-SVO-202	Run 3 Train Back	0.334	0.359	0.833	0.106	2.227	0.19	1.11	1.01[a1] (50%)	0.429
DUN4-SVO-271	Run 4 Train Front	ND	ND	ND	ND	ND	ND	ND	0.624[a2] (78%)	0
DUN4-SVO-283	Run 4 Train Back	0.421	ND	0.992	0.140	2.41	0.15	1.06	1.60[a1] (80%)	0.275

[a]The surrogate is $^{37}C_{14}$-2,3,7,8-tetrachlorodibenzo[1,4]dioxin. All of the resin samples were spiked with 2.00 ng of the surrogate[(a1)] or with 0.800 of the surrogate[(a2)].
[b]ND = Not detected; detection limit is 0.02 ng for TCDFs and TCDDs; 0.10 ng for PeCDFs, PeCDDs, HxCDFs, HxCDDs, HpCDFs, and HpCDDs; and 0.20 ng for OCDF and OCDD.
[c]Toxicity Equivalence Factors based on EPA Report 625/3-89/16.

TABLE 5-20

DETERMINATION OF TOTAL PCDDs/PCDFs IN PROCESS WATER

			Concentration (ng/L)									
Sample No.	Sample Description	SRI Sample No.	TCDF	TCDD	PeCDF	PeCDD	HxCDF	HxCDD	HpCDF	HpCDD	OCDF	OCDD
--	SRI Liquid Extraction Blank	V07726	ND[a]	ND	ND	ND	ND	ND	ND	ND	ND	ND
DUN3-MT-977	Run 3 Pre	V07731	ND	ND	ND	ND	ND	ND	ND	ND	ND	ND
DUN-MT-974,975	Run 3 Post	V07759	ND	ND	ND	ND	ND	ND	ND	ND	ND	ND
DUN3-MT-974,975	Run 3 Post Matrix Spike	V07760	(138%)[b]	(129%)	(92%)	(128%)	(104%)	(111%)	(106%)	(119%)	(44%)	(111%)
DUN3-MT-974,975	Run 3 Post Matrix Spike	V07761	(151%)	(141%)	(97%)	(113%)	(106%)	(116%)	(107%)	(117%)	(56%)	(114%)
DUN4-MT-961	Run 4 Pre	V07750	ND	4.33	ND	ND	ND	ND	ND	ND	ND	ND
DUN4-MT-958	Run 4 Post	V07762	0.30	ND	ND	ND	ND	ND	ND	ND	ND	ND

[a]ND = Not detected; detection limit is 0.02 ng for TCDFs and TCDDs; 0.10 ng for PeCDFs, PeCDDs, HxCDFs, HxCDDs, HpCDFs, and HpCDDs; and 0.20 ng for OCDFs and OCDDs.
[b]A value in parenthesis represents the percent recovery of a matrix spike.

TABLE 5-21

DETERMINATION OF TARGET PCDDs/PCDFs IN PROCESS WATER

		Concentration (ng/L)									
Sample No.	Sample Description	2,3,7,8 TCDF	2,3,7,8 TCDD	1,2,3, 7,8- PeCDF	2,3,4, 7,8- PeCDF	1,2,3, 7,8- PeCDD	1,2,3, 4,7,8- HxCDF	1,2,3, 6,7,8- HxCDF	1,2,3, 7,8,9- HxCDF	2,3,4, 6,7,8- HxCDF	1,2,3, 4,7,8- HxCDD
--	SRI Liquid Extraction Blank	ND[b]	ND	ND	ND	ND	ND	ND	ND	ND	ND
DUN3-MT-977	Run 3 Pre	ND	ND	ND	ND	ND	ND	ND	ND	ND	ND
DUN3-MT-974,975	Run 3 Post	ND	ND	ND	ND	ND	ND	ND	ND	ND	ND
DUN3-MT-974,975	Run 3 Post Matrix Spike	(138%)[c]	(128%)	(87%)	(96%)	(127%)	(98%)	(91%)	(100%)	(127%)	(112%)
DUN3-MT-974,975	Run 3 Post Matrix Spike	(151%)	(141%)	(98%)	(97%)	(113%)	(110%)	(102%)	(94%)	(118%)	(116%)
DUN4-MT-961	Run 4 Pre	ND	ND	ND	ND	ND	ND	ND	ND	ND	ND
DUN4-MT-958	Run 4 Post	ND	ND	ND	ND	ND	ND	ND	ND	ND	ND

TABLE 5-21

DETERMINATION OF TARGET PCDDs/PCDFs IN PROCESS WATER

		Concentration (ng/L)								
Sample No.	Sample Description	1,2,3,6,7,8-HxCDD	1,2,3,7,8,9-HxCDD	1,2,3,4,6,7,8-HpCDF	1,2,3,4,7,8,9-HpCDF	1,2,3,4,6,7,8-HpCDD	OCDF	OCDD	Surrogate[a] (% Recov.)	2,3,7,8-TCDD Toxicity Equivalent[a]
--	SRI Liquid Extraction Blank	ND[b]	ND	ND	ND	ND	ND	ND	0.654 (82%)	0
DUN3-MT-977	Run 3 Pre	ND	ND	ND	ND	ND	ND	ND	0.774 (97%)	0
DUN3-MT-974,975	Run 3 Post	ND	ND	ND	ND	ND	ND	nd	3.70 (115%)	0
DUN3-MT-974,975	Run 3 Post Matrix Spike	(108%)	(114%)	(121%)	(91%)	(119%)	(44%)	(111%)	3.54 (139%)	NA[d]
DUN3-MT-974,975	Run 3 Post Matrix Spike	(115%)	(113%)	(127%)	(86%)	(117%)	(56%)	(114%)	3.37 (105%)	NA
DUN4-MT-961	Run 4 Pre	ND	ND	ND	ND	ND	ND	ND	1.91 (116%)	0
DUN4-MT-958	Run 4 Post	ND	ND	ND	ND	ND	ND	ND	1.75 (109%)	0

[a]The surrogate is $^{37}C_{14}$-2,3,7,8-tetrachlorodibenzo[1,4]dioxin. All of the samples were spiked with 0.800 of the surrogate. Toxicity Equivalence Factors based on EPA Report 625/3-89/16.
[b]ND = Not detected; detection limit is 0.02 ng (2 ng/kg) for TCDFs and TCDDs; 0.10 ng (10 ng/kg) for PeCDFs, PeCDDs, HxCDFs, HxCDDs, HpCDFs, and HpCDDs; and 0.20 ng (20 ng/kg) for OCDF and OCDD. The mass of ash taken for analysis was 0.010 kg.
[c]A value in parenthesis represents the percent recovery of a matrix spike.
[d]NA = Not Applicable

DUNGB5.W51 330

TABLE 5-22

DETERMINATION OF TOTAL PCDDs/PCDFs IN FUEL OIL

			Concentration (ng/L)									
Sample No.	Sample Description	SRI Sample No.	TCDF	TCDD	PeCDF	PeCDD	HxCDF	HxCDD	HpCDF	HpCDD	OCDF	OCDD
--	SRI Dilution Blank	VO7783	ND[a]	ND	ND	ND	ND	ND	ND	ND	ND	ND
DUN1-VO-076	Run 1 Pre	VO7848	ND	ND	ND	ND	ND	ND	ND	ND	ND	ND
DUN1-VO-991	Run 1 Post	VO7775	ND	ND	ND	ND	ND	ND	ND	ND	ND	ND
DUN2-VO-157	Run 2 Pre	VO7849	ND	ND	ND	ND	ND	ND	ND	ND	ND	ND
DUN2-VO-158	Run 2 Post	VO7787	ND	ND	ND	ND	ND	ND	ND	ND	ND	ND
DUN3-VO-238	Run 3 Pre	VO7852	ND	ND	ND	ND	ND	ND	ND	ND	ND	ND
DUN3-VO-239	Run 3 Post	VO7770	ND	ND	ND	ND	ND	ND	ND	ND	ND	ND
DUN3-VO-239	Run Post Matrix Spike	VO7772	(117%)[b]	(137%)	(105%)	(109%)	(114%)	(108%)	(110%)	(110%)	(107%)	(107%)
DUN3-VO-239	Run 3 Post Matrix Spike	VO7773	(122%)	(121%)	(107%)	(110%)	(120%)	(109%)	(112%)	(115%)	(106%)	(119%)
DUN4-VO-319	Run 4 Pre	VO7851	ND	ND	ND	ND	ND	ND	ND	ND	ND	ND
DUN4-VO-320	Run 4 Post	VO7786	ND	ND	ND	ND	ND	ND	ND	ND	ND	ND

[a]ND = Not detected; detection limit is 0.02 ng for TCDFs and TCDDs; 0.10 ng for PeCDFs, PeCDDs, HxCDFs, HxCDDs, HpCDFs, and HpCDDs; and 0.20 ng for OCDFs and OCDDs.
[b]A value in parenthesis represents the percent recovery of a matrix spike.

TABLE 5-23

DETERMINATION OF TARGET PCDDs/PCDFs IN FUEL OIL

		Concentration (ng/kg)									
Sample No.	Sample Description	2,3,7,8 TCDF	2,3,7,8 TCDD	1,2,3, 7,8- PeCDF	2,3,4, 7,8- PeCDF	1,2,3, 7,8- PeCDD	1,2,3, 4,7,8- HxCDF	1,2,3, 6,7,8- HxCDF	1,2,3, 7,8,9- HxCDF	2,3,4, 6,7,8- HxCDF	1,2,3, 4,7,8- HxCDD
--	SRI Fuel Oil Dilution Blank	ND[b]	ND	ND	ND	ND	ND	ND	ND	ND	ND
DUN1-VO-076	Run 1 Pre	ND	ND	ND	ND	ND	ND	ND	ND	ND	ND
DUN1-VO-991	Run 1 Post	ND	ND	ND	ND	ND	ND	ND	ND	ND	ND
DUN2-VO-157	Run 2 Pre	ND	ND	ND	ND	ND	ND	ND	ND	ND	ND
DUN2-VO-158	Run 2 Post	ND	ND	ND	ND	ND	ND	ND	ND	ND	ND
DUN3-VO-238	Run 3 Pre	ND	ND	ND	ND	ND	ND	ND	ND	ND	ND
DUN3-VO-239	Run 3 Post	ND	ND	ND	ND	ND	ND	ND	ND	ND	ND
DUN3-VO-239	Run 3 Post Matrix Spike	(117%)[c]	(137%)	(104%)	(106%)	(109%)	(110%)	(111%)	(111%)	(122%)	(110%)
DUN3-MT-239	Run 3 Post Matrix Spike	(122%)	(121%)	(105%)	(108%)	(110%)	(113%)	(114%)	(115%)	(136%)	(106%)
DUN4-VO-319	Run 4 Pre	ND	ND	ND	ND	ND	ND	ND	ND	ND	ND
DUN4-VO-320	Run 4 Post	ND	ND	ND	ND	ND	ND	ND	ND	ND	ND

TABLE 5-23

DETERMINATION OF TARGET PCDDs/PCDFs IN FUEL OIL

		Concentration (ng/kg)								
Sample No.	Sample Description	1,2,3,6,7,8-HxCDD	1,2,3,7,8,9-HxCDD	1,2,3,4,6,7,8-HpCDF	1,2,3,4,7,8,9-HpCDF	1,2,3,4,6,7,8-HpCDD	OCDF	OCDD	Surrogate[a] (% Recov.)	2,3,7,8-TCDD Toxicity Equivalent[a]
--	SRI Fuel Oil Dilution Blank	ND[b]	ND	ND	ND	ND	ND	ND	448 (112%)	0
DUN1-VO-076	Run 1 Pre	ND	ND	ND	ND	ND	ND	ND	327 (82%)	0
DUN1-VO-991	Run 1 Post	ND	ND	ND	ND	ND	ND	ND	419 (107%)	0
DUN2-VO-157	Run 2 Pre	ND	ND	ND	ND	ND	ND	ND	395 (100%)	0
DUN2-VO-158	Run 2 Post	ND	ND	ND	ND	ND	ND	ND	498 (127%)	0
DUN3-VO-238	Run 3 Pre	ND	ND	ND	ND	ND	ND	ND	337 (85%)	0
DUN3-VO-239	Run 3 Post	ND	ND	ND	ND	ND	ND	ND	451 (114%)	0
DUN3-VO-239	Run 3 Post Matrix Spike	(106%)	(109%)	(107%)	(114%)	(110%)	(107%)	(107%)	514 (130%)	NA[d]
DUN3-VO-239	Run 3 Post Matrix Spike	(116%)	(103%)	(114%)	(110%)	(115%)	(106%)	(118%)	424 (106%)	NA
DUN4-VO-319	Run 4 Pre	ND	ND	ND	ND	ND	ND	ND	414 (104%)	0
DUN4-VO-320	Run 4 Post	ND	ND	ND	ND	ND	ND	ND	463 (116%)	0

[a]The surrogate is $^{37}C_{14}$-2,3,7,8-tetrachlorodibenzo[1,4]dioxin. All of the samples were spiked with 0.800 of the surrogate. Toxicity Equivalence Factors based on EPA Report 625/3-89/16.
[b]ND = Not detected; detection limit is 0.02 ng (10 ng/kg) for TCDFs and TCDDs; 0.10 ng (50 ng/kg) for PeCDFs, PeCDDs, HxCDFs, HxCDDs, HpCDFs, and HpCDDs; and 0.20 ng (100 ng/kg) for OCDF and OCDD. The mass of sample taken for analysis was 0.002 kg.
[c]A value in parenthesis represents the percent recovery of a matrix spike.
[d]NA = Not Applicable

TABLE 5-24

DETERMINATION OF TOTAL PCDDs/PCDFs IN QUENCH LIQUID

			Concentration (ng/L)									
Sample No.	Sample Description	SRI Sample No.	TCDF	TCDD	PeCDF	PeCDD	HxCDF	HxCDD	HpCDF	HpCDD	OCDF	OCDD
--	SRI Liquid Ext. Blank	VO7726	ND[a]	ND	ND	ND	ND	ND	ND	ND	ND	ND
DUN3-MT-079	Run 1 Pre	VO7715	ND	ND	ND	ND	ND	ND	ND	ND	ND	ND
DUN-MT-998	Run 1 Post	VO7716	ND	ND	ND	ND	ND	ND	ND	ND	ND	0.74
DUN2-MT-160	Run 2 Pre	VO7717	ND	ND	ND	ND	ND	ND	ND	ND	ND	ND
DUN2-MT-989	Run 2 Post	VO7718	ND	ND	ND	ND	ND	ND	ND	ND	ND	ND
DUN3-MT-241	Run 3 Pre	VO7727	ND	ND	ND	ND	ND	ND	ND	ND	ND	ND
DUN3-MT-983,984	Run 3 Post	VO7746	ND	ND	ND	ND	ND	ND	ND	ND	ND	ND
DUN3-MT-983,984	Run 3 Post Matrix Spike	VO7747	(141%)[b]	(142%)	(108%)	(124%)	(127%)	(125%)	(121%)	(124%)	(110%)	(119%)
DUN3-MT-983,984	Run 3 Post Matrix Spike	VO7749	(150%)	(175%)	(114%)	(133%)	(119%)	(128%)	(117%)	(121%)	(115%)	(120%)
DUN4-MT-323	Run 4 Pre	VO7729	ND	ND	ND	ND	ND	ND	ND	ND	ND	ND
DUN4-MT-967	Run 4 Post	VO7790	ND	ND	ND	ND	ND	ND	ND	ND	ND	ND

[a]ND = Not detected; detection limit is 0.02 ng for TCDFs and TCDDs; 0.10 ng for PECDFs, PECDDs, HXCDFs, HXCDDs, HPCDFs, and HPCDDs; and 0.20 ng for OCDFs and OCDDs.
[b]A value in parenthesis represents the percent recovery of a matrix spike.

DUNGB5.W51 330

TABLE 5-25

DETERMINATION OF TARGET PCDDs/PCDFs IN QUENCH LIQUID

		Concentration (ng/L)									
Sample No.	Sample Description	2,3,7,8 TCDF	2,3,7,8 TCDD	1,2,3, 7,8- PeCDF	2,3,4, 7,8- PeCDF	1,2,3, 7,8- PeCDD	1,2,3, 4,7,8- HxCDF	1,2,3, 6,7,8- HxCDF	1,2,3, 7,8,9- HxCDF	2,3,4, 6,7,8- HxCDF	1,2,3, 4,7,8- HxCDD
--	SRI Liquid Extraction Blank	ND[b]	ND	ND	ND	ND	ND	ND	ND	ND	ND
DUN1-MT-079	Run 1 Pre	ND	ND	ND	ND	ND	ND	ND	ND	ND	ND
DUN1-MT-998	Run 1 Post	ND	ND	ND	ND	ND	ND	ND	ND	ND	ND
DUN2-MT-160	Run 2 Pre	ND	ND	ND	ND	ND	ND	ND	ND	ND	ND
DUN2-MT-989	Run 2 Post	ND	ND	ND	ND	ND	ND	ND	ND	ND	ND
DUN3-MT-241	Run 3 Pre	ND	ND	ND	ND	ND	ND	ND	ND	ND	ND
DUN3-MT-983,984	Run 3 Post	ND	ND	ND	ND	ND	ND	ND	ND	ND	ND
DUN4-MT-323	Run 4 Pre	ND	ND	ND	ND	ND	ND	ND	ND	ND	ND
DUN4-MT-967	Run 4 Post	ND	ND	ND	ND	ND	ND	ND	ND	ND	ND

TABLE 5-25

DETERMINATION OF TARGET PCDDs/PCDFs IN QUENCH LIQUID

		Concentration (ng/L)								
Sample No.	Sample Description	1,2,3, 6,7,8-HxCDD	1,2,3, 7,8,9-HxCDD	1,2,3,4, 6,7,8-HpCDF	1,2,3,4, 7,8,9-HpCDF	1,2,3,4, 6,7,8-HpCDD	OCDF	OCDD	Surrogate[a] (% Recov.)	2,3,7,8-TCDD Toxicity Equivalent
--	SRI Liquid Extraction Blank	ND[b]	ND	ND	ND	ND	ND	ND	0.654 (82%)	0
DUN1-MT-079	Run 1 Pre	ND	ND	ND	ND	ND	ND	ND	0.998 (64%)	0
DUN1-MT-998	Run 1 Post	ND	ND	ND	ND	ND	ND	0.739	1.81 (113%)	0
DUN2-MT-160	Run 2 Pre	ND	ND	ND	ND	ND	ND	ND	1.29 (83%)	0
DUN2-MT-989	Run 2 Post	ND	ND	ND	ND	ND	ND	ND	1.43 (92%)	0
DUN3-MT-241	Run 3 Pre	ND	ND	ND	ND	ND	ND	ND	1.54 (84%)	0
DUN3-MT-983,984	Run 3 Post	ND	ND	ND	ND	ND	ND	ND	3.04 (95%)	0
DUN4-MT-323	Run 4 Pre	ND	ND	ND	ND	ND	ND	ND	1.84 (101%)	0
DUN4-MT-967	Run 4 Post	ND	ND	ND	ND	ND	ND	ND	2.00 (121%)	0

[a]The surrogate is $^{37}C_{14}$-2,3,7,8-tetrachlorodibenzo[1,4]dioxin. All of the samples were spiked with 0.800 of the surrogate. Toxicity Equivalence Factors based on EPA Report 625/3-89/16.
[b]ND = Not detected; detection limit is 0.02 ng (2 ng/kg) for TCDFs and TCDDs; 0.10 ng (10 ng/kg) for PeCDFs, PeCDDs, HxCDFs, HxCDDs, HpCDFs, and HpCDDs; and 0.20 ng (20 ng/kg) for OCDF and OCDD. The volume of sample taken for analysis varied from 0.250 to 1.0 L.
[c]A value in parenthesis represents the percent recovery of a matrix spike.

DUN-BS.W51 330

TABLE 5-26

DETERMINATION OF TOTAL PCDDs/PCDFs IN ASH

			Concentration (ng/kg)									
Sample No.	Sample Description	SRI Sample No.	TCDF	TCDD	PeCDF	PeCDD	HxCDF	HxCDD	HpCDF	HpCDD	OCDF	OCDD
--	SRI Ash Blank	VO7681	ND[a]	ND	ND	ND	ND	ND	ND	ND	ND	ND
DUN4-SVO-936,937,938	Baghouse Ash	VO7694	261	1061	239	530	408	1769	724	2046	161	1691
DUN4-SVO-936,937,938	Baghouse Ash Matrix Spike	VO7706	(131%)[b]	(118%)	(114%)	(116%)	(113%)	(116%)	(116%)	(117%)	(95%)	(93%)
DUN4-SVO-936,937,938	Baghouse Ash Matrix Spike Duplicate	VO7707	(133%)	(133%)	(113%)	(109%)	(114%)	(115%)	(106%)	(123%)	(110%)	(74%)
DUN4-SVO-392,393,940	Furnace Ash	VO7702	ND	5.68	8.14	3.89	16.5	17.1	10.0	14.5	5.43	12.5
DUN4-SVO-392,393,940	Furnace Ash Matrix Spike	VO7703	(119%)	(111%)	(99%)	(99%)	(105%)	(115%)	(102%)	(104%)	(91%)	(103%)
DUN4-SVO-392,393,940	Furnace Ash, Matrix Spike Duplicate	VO7705	(115%)	(123%)	(93%)	(110%)	(116%)	(122%)	(108%)	(119%)	(106%)	(114%)

[a]ND = Not detected; detection limit is 0.02 ng (2 ng/kg) for TCDFs and TCDDs; 0.10 ng (10 ng/kg) for PECDFs, PECDDs, HXCDFs, HXCDDs, HPCDFs, and HPCDDs; and 0.20 ng (20 ng/kg) for OCDFs and OCDDs. The mass of ash taken for analysis was 0.010 kg.
[b]A value in parenthesis represents the percent recovery of a matrix spike.

TABLE 5-27

DETERMINATION OF TARGET PCDDs/PCDFs IN ASH SAMPLES

		Concentration (ng/kg)									
Sample No.	Sample Description	2,3,7,8 TCDF	2,3,7,8 TCDD	1,2,3, 7,8- PeCDF	2,3,4, 7,8- PeCDF	1,2,3, 7,8- PeCDD	1,2,3, 4,7,8- HxCDF	1,2,3, 6,7,8- HxCDF	1,2,3, 7,8,9- HxCDF	2,3,4, 6,7,8- HxCDF	1,2,3, 4,7,8- HxCDD
--	SRI Ash Blank	ND[b]	ND	ND	ND	ND	ND	ND	ND	ND	ND
DUN4-SVO-936,937,938	Baghouse Ash	14.3	ND	7.38	49.4	20.4	99.3	58.5	17.6	82.4	3.32
DUN4-SVO-936,937,938	Baghouse Ash Matrix Spike	(131%)[c]	(118%)	(118%)	(110%)	(116%)	(116%)	(111%)	(112%)	(113%)	(115%)
DUN4-SVO-936,937,938	Baghouse Ash Matrix Spike Duplicate	(133%)	(133%)	(113%)	(113%)	(109%)	(118%)	(110%)	(113%)	(115%)	(126%)
DUN4-SVO-392,393,940	Furnace Ash	ND	ND	3.66	4.66	3.89	3.73	3.41	4.11	5.43	3.02
DUN4-SVO-392,393,940	Furnace Ash Matrix Spike	(119%)	(111%)	(99%)	(98%)	(99%)	(105%)	(103%)	(106%)	(106%)	(110%)
DUN4-SVO-392,393,940	Furnace Ash Matrix Spike Duplicate	(115%)	(123%)	(98%)	(89%)	(110%)	(116%)	(118%)	(116%)	(113%)	(125%)

TABLE 5-27

DETERMINATION OF TARGET PCDDs/PCDFs IN ASH SAMPLES

		Concentration (ng/kg)								
Sample No.	Sample Description	1,2,3,6,7,8-HxCDD	1,2,3,7,8,9-HxCDD	1,2,3,4,6,7,8-HpCDF	1,2,3,4,7,8,9-HpCDF	1,2,3,4,6,7,8-HpCDD	OCDF	OCDD	Surrogate[a] (% Recov.)	2,3,7,8-TCDD Toxicity Equivalent
--	SRI Ash Blank	ND[b]	ND	ND	ND	ND	ND	ND	71.4 (89%)	0
DUN4-SVO-936,937,938	Baghouse Ash	174	124	392	70.5	1181	159	1691	72.1 (90%)	111
DUN4-SVO-936,937,938	Baghouse Ash Matrix Spike	(114%)	(119%)	(118%)	(114%)	(117%)	(94%)	(93%)	97.3 (122%)	NA[d]
DUN4-SVO-936,937,938	Baghouse Ash Matrix Spike Duplicate	(108%)	(113%)	(103%)	(108%)	(123%)	(110%)	(74%)	89.4 (112%)	NA
DUN4-SVO-392,393,940	Furnace Ash	ND	4.57	5.63	3.33	9.88	5.43	12.5	89.2 (111%)	7.08
DUN4-SVO-392,393,940	Furnace Ash Matrix Spike	(121%)	(115%)	(102%)	(103%)	(104%)	(91%)	(103%)	76.0 (95%)	NA
DUN4-SVO-392,393,940	Furnace Ash Matrix Spike Duplicate	(119%)	(122%)	(109%)	(107%)	(119%)	(106%)	(114%)	58.6 (73%)	NA

[a]The surrogate is $^{37}C_{14}$-2,3,7,8-tetrachlorodibenzo[1,4]dioxin. All of the samples were spiked with 0.800 of the surrogate. Toxicity Equivalence Factors based on EPA Report 625/3-89/16.
[b]ND = Not detected; detection limit is 0.02 ng (2 ng/kg) for TCDFs and TCDDs; 0.10 ng (10 ng/kg) for PECDFs, PECDDs, HXCDFs, HXCDDs, HPCDFs, and HPCDDs; and 0.20 ng (20 ng/kg) for OCDF and OCDD. The mass of ash taken for analysis was 0.010 kg.
[c]A value in parenthesis represents the percent recovery of a matrix spike.
[d]NA = Not Applicable

TABLE 5-28

STACK GAS ANALYSES FOR VOLATILE PRODUCTS
OF INCOMPLETE COMBUSTION

	Test Run			
	1	2	3	4
Sample Volume (dscm)	0.0786	0.0784	0.0784	0.0786
Emitted Substances[a]	Concentration, μg/dscm			
acetone	162	124	51	75
methylene chloride	0.36	ND[b]	ND	0.10
2-butanone	0.68	3.7	ND	2.1
chloroform	1.79	0.46	1.06	0.14
benzene	208	252	95	120
toluene	15	23	6.8	4.6
1,1,2-trichloroethene	ND	ND	ND	0.28
dibromochloromethane	0.24	ND	ND	ND
bromoform	0.24	0.59	0.95	0.28

[a]Values blank corrected.
[b]ND = Not detected; detection limits for volatile organics are given in Table 5-29.

TABLE 5-29

VOST
STACK GAS DETECTION LIMITS
FOR VOLATILE ORGANIC COMPOUNDS

Number	Compound	ng	µg/dscm[a]
1	chloromethane	5	0.064
2	vinyl chloride	5	0.064
3	bromomethane	10	0.127
4	chloroethane	10	0.127
5	1,1-dichloroethene	5	0.064
6	acetone	10	0.127
7	methyliodide	5	0.064
8	carbon disulfide	20	0.255
9	methylene chloride	5	0.064
10	trans-1,2-dichloroethene	5	0.064
11	1,1-dichloroethane	5	0.064
12	2-butanone	20	0.255
14	chloroform	5	0.064
15	1,1,1-trichloroethene	10	0.127
16	carbon tetrachloride	5	0.064
18	benzene	5	0.064
19	1,2-dichloroethene	5	0.064
21	trichloroethene	5	0.064
22	1,2-dichloropropane	5	0.064
23	bromodichloromethane	5	0.064
24	cis-1,3-dichloropropene	5	0.064
25	2-hexanone	5	0.064
27	toluene	5	0.064
28	trans-1,3-dichloropropene	5	0.064
29	1,1,2-trichloroethene	5	0.064
30	tetrachloroethene	5	0.064
31	4-methyl-2-pentanone	5	0.064

TABLE 5-29

VOST
STACK GAS DETECTION LIMITS
FOR VOLATILE ORGANIC COMPOUNDS

Number	Compound	ng	μg/dscm[a]
32	dibromochloromethane	5	0.064
34	chlorobenzene	5	0.064
35	ethylbenzene	5	0.064
36	m- & p-xylene	5	0.064
37	o-xylene	5	0.064
38	styrene	5	0.064
39	bromoform	5	0.064
41	1,1,2,2-tetrachloroethane	5	0.064

[a]Average value for all four test runs.

TABLE 5-30

STACK GAS VOST VOLATILE ORGANICS RESULTS SUMMARY
TEST RUN 1

Pair	Description	Sample No.	Compound	Quantity (ng)
1	Tenax	VO-045	Acetone	3614
			Chloroform	13.5
			Benzene	5634
			Toluene	350
			Dibromochloromethane	6.3
			Bromoform	18.7
	Tenax Charcoal	VO-046	Acetone	799
	Condensate	VO-057	Acetone	83.5
			Methylene Chloride	7.1
			Chloroform	210
			Toluene	124
2	Tenax	VO-047	Acetone	2391
			2-Butanone	53.1
			Chloroform	16.3
			Benzene	3714
			Toluene	370
			Dibromochloromethane	12.7
	Tenax Charcoal	VO-048	Acetone	686
	Condensate	VO-058	Acetone	84.3
			Chloroform	133
			Toluene	83.4
3	Tenax	VO-049	Acetone	2091
			Chloroform	11.2
			Benzene	3192
			Toluene	392
	Tenax Charcoal	VO-050	Acetone	619
	Condensate	VO-059	Acetone	79.5
			Chloroform	137
			Toluene	99
4	Tenax	VO-051	Acetone	1681
			Chloroform	14.9
			Benzene	3824
			Toluene	388
	Tenax Charcoal	VO-052	Acetone	622
			Methylene Chloride	21.03
			Toluene	23.9
	Condensate	VO-060	Acetone	93.4
			Chloroform	137
			Toluene	110

TABLE 5-30

STACK GAS VOST VOLATILE ORGANICS RESULTS SUMMARY
TEST RUN 1

Pair	Description	Sample No.	Compound	Quantity (ng)
Field Blank	Tenax	VO-053	--	ND[a]
	Tenax Charcoal	VO-054	--	ND
Trip Blank	Tenax	VO-136	--	ND
	Tenax Charcoal	VO-137	--	ND
	Condensate	VO-142	Acetone Chloroform Toluene	18.6 125 320

[a]ND = None detected; detection limits for volatile compounds are given in Table 5-29.

TABLE 5-31

STACK GAS VOST VOLATILE ORGANICS RESULTS SUMMARY
TEST RUN 2

Pair	Description	Sample No.	Compound	Quantity (ng)
1	Tenax	VO-126	Acetone	2581
			2-Butanone	120
			Chloroform	12.8
			Benzene	6342
			Toluene	394
			Bromoform	45.9
	Tenax Charcoal	VO-127	Acetone	627
			Toluene	6.38
	Condensate	VO-138	Acetone	89.9
			Chloroform	117
			Toluene	253
2	Tenax	VO-128	Acetone	1039
			2-Butanone	102
			Chloroform	8.7
			Benzene	4504
			Toluene	429
	Tenax Charcoal	VO-129	Acetone	670
			Chloroform	5.1
			Toluene	50.6
	Condensate	VO-139	Acetone	92
			Chloroform	113
			Toluene	253
3	Tenax	VO-130	Acetone	2169
			2-Butanone	69.6
			Chloroform	9.4
			Benzene	5304
			Toluene	489
	Tenax Charcoal	VO-131	Acetone	585
	Condensate	VO-140	Acetone	86
			Chloroform	118
			Toluene	275
4	Tenax	VO-132	Acetone	1301
			Benzene	3597
			Toluene	405
	Tenax Charcoal	VO-133	Acetone	474
	Condensate	VO-141	Acetone	68.9
			Chloroform	109
			Toluene	268

TABLE 5-31

STACK GAS VOST VOLATILE ORGANICS RESULTS SUMMARY
TEST RUN 2

Pair	Description	Sample No.	Compound	Quantity (ng)
Field Blank	Tenax	VO-134	--	ND[a]
	Tenax Charcoal	VO-135	--	ND
Trip Blank	Tenax	VO-136	--	ND
	Tenax Charcoal	VO-137	--	ND
	Condensate	VO-142	Acetone Chloroform Toluene	18.6 125 320

[a]ND = None detected; detection limits for volatile compounds are given in Table 5-29.

TABLE 5-32

STACK GAS VOST VOLATILE ORGANICS RESULTS SUMMARY
TEST RUN 3

Pair	Description	Sample No.	Compound	Quantity (ng)
1	Tenax	VO-207	Acetone	794
			Chloroform	12.7
			Benzene	1881
			Toluene	108
			Bromoform	46.3
	Tenax Charcoal	VO-208	Acetone	245
			Toluene	6.38
	Condensate	VO-219	Acetone	39
			Chloroform	127
			Toluene	84.2
2	Tenax	VO-209	Acetone	680
			Chloroform	6.2
			Benzene	1742
			Toluene	128
	Tenax Charcoal	VO-210	Acetone	189
	Condensate	VO-220	Acetone	31.7
			Chloroform	125
			Toluene	100
3	Tenax	VO-211	Acetone	662
			Chloroform	11.1
			Benzene	1842
			Toluene	153
			Bromoform	28.2
	Tenax Charcoal	VO-212	Acetone	277
	Condensate	VO-221	Acetone	29
			Chloroform	119
			Toluene	96
4	Tenax	VO-213	Acetone	761
			Chloroform	6.2
			Benzene	1985
			Toluene	138
	Tenax Charcoal	VO-214	Acetone	276
	Condensate	VO-222	Chloroform	122
			Toluene	116

TABLE 5-32

STACK GAS VOST VOLATILE ORGANICS RESULTS SUMMARY
TEST RUN 3

Pair	Description	Sample No.	Compound	Quantity (ng)
Field Blank	Tenax	VO-215	--	ND[a]
	Tenax Charcoal	VO-216	--	ND
Trip Blank	Tenax	VO-298	--	ND
	Tenax Charcoal	VO-299	--	ND
	Condensate	VO-304	Chloroform Toluene	109 300

[a]ND = None detected; detection limits for volatile compounds are given in Table 5-29.

TABLE 5-33

STACK GAS VOST VOLATILE ORGANICS RESULTS SUMMARY
TEST RUN 4

Pair	Description	Sample No.	Compound	Quantity (ng)
1	Tenax	VO-288	Acetone	1218
			2-Butanone	44.8
			Chloroform	5.8
			Benzene	2952
			Toluene	75.5
	Tenax Charcoal	VO-289	Acetone	300
	Condensate	VO-300	Acetone	57
			Chloroform	106
			Toluene	226
2	Tenax	VO-290	Acetone	830
			Chloroform	5.1
			Benzene	2174
			Toluene	60.8
	Tenax Charcoal	VO-291	Acetone	252
	Condensate	VO-301	Acetone	40.7
			Chloroform	110
			Toluene	245
3	Tenax	VO-292	Acetone	916
			2-Butanone	84.4
			Benzene	2278
			Toluene	129
	Tenax Charcoal	VO-293	Acetone	369
	Condensate	VO-302	Acetone	28.6
			Chloroform	107
			Toluene	240
4	Tenax	VO-294	Acetone	1537
			2-Butanone	34.7
			Benzene	2054
			Toluene	93.8
	Tenax Charcoal	VO-295	Acetone	308
	Condensate	VO-303	Acetone	56.7
			Methylene Chloride	8.1
			Chloroform	84.1
			Toluene	200

TABLE 5-33

STACK GAS VOST VOLATILE ORGANICS RESULTS SUMMARY
TEST RUN 4

Pair	Description	Sample No.	Compound	Quantity (ng)
Field Blank	Tenax	VO-296	--	ND[a]
	Tenax Charcoal	VO-297	--	ND
Trip Blank	Tenax	VO-298	--	ND
	Tenax Charcoal	VO-299	--	ND
	Condensate	VO-304	Chloroform Toluene	109 300

[a]ND = None detected; detection limits for volatile compounds are given in Table 5-29.

TABLE 5-34

STACK GAS VOST VOLATILE TENTATIVELY IDENTIFIED COMPOUNDS

Sample Name	File #	Tentative Compound Name	Amount (μg)	Stack Conc. (μg/dscm)
Test Run 1 Pair 1 Tenax DUN1-VO-045	P03802	Unknown	1.68	86.15
		silane, fluorotrimethyl-	0.490	25.13
		Unknown	0.062	3.18
		hexane	0.037	1.90
		cyclotrisiloxane, hexamethyl-	0.896	45.95
		disiloxane, ethenylpentamethyl-	0.466	23.90
		trisiloxane, octamethyl-	0.172	8.82
Test Run 1 Pair 1 T/C DUN1-VO-046	P03806	Unknown	5.0	256.41
		silane, fluorotrimethyl-	0.866	44.41
Test Run 1 Cond. 1 DUN1-VO-057	P03739	Unknown	0.858	44.00
Test Run 1 Pair 2 Tenax DUN1-VO-047	P03810	Unknown	1.7	87.18
		silane, fluorotrimethyl-	0.389	19.95
		hexane	0.027	1.38
		pyridine, 2-phenyl-	0.033	1.69
		Unknown	0.028	1.44
		1. acetic acid, (trimethylsilyl)- 2. silanol, trimethyl- (Both low probability)	0.021	1.08
		2H-1,4-benzothiazine, 3,4-dihydro-	0.151	7.74
		cyclotrisiloxane, hexamethyl-	1.01	51.79
		silane, diethoxydimethyl-	0.385	19.74
		trisiloxane, octamethyl-	0.096	4.92

STACK GAS VOST VOLATILE TENTATIVELY IDENTIFIED COMPOUNDS

Sample Name	File #	Tentative Compound Name	Amount (μg)	Stack Conc. (μg/dscm)
Test Run 1 Pair 2 T/C DUN1-VO-048	P03807	Unknown	9.52	488.21
		silane, fluorotrimethyl-	0.591	30.31
Test Run 1 Cond. 2 DUN1-VO-058	P03740	Unknown	0.724	37.13
Test Run 1 Pair 3 Tenax DUN1-VO-049	P03811	Unknown	1.74	88.32
		silane, fluorotrimethyl-	0.380	19.29
		Unknown	0.062	3.15
		hexane	0.052	2.64
		2H-1,4-benzothiazine, 3,4-dihydro-	0.048	2.44
		Unknown	0.034	1.73
		cyclotrisiloxane, hexamethyl-	0.924	46.90
		silane, diethoxydimethyl- (Low probability)	0.389	19.75
		trisiloxane, octamethyl-	0.079	4.01
Test Run 1 Pair 3 T/C DUN1-VO-050	P03808	Unknown	8.51	431.98
		silane, fluorotrimethyl-	0.641	32.54
Test Run 1 Cond. 3 DUN1-VO-059	P03741	Unknown	0.746	37.87
Test Run 1 Pair 4 Tenax DUN1-VO-051	P03812	Unknown	0.998	50.40
		hexane	0.025	1.26
		Unknown	0.018	0.91
		1. acetic acid, (trimethylsilyl)- 2. silanol, trimethyl-	0.307	15.51
		Unknown	0.052	2.63
		cyclotrisiloxane, hexamethyl-	1.04	52.53
		silane, diethoxydimethyl-	0.380	19.19

TABLE 5-34

STACK GAS VOST VOLATILE TENTATIVELY IDENTIFIED COMPOUNDS

Sample Name	File #	Tentative Compound Name	Amount (μg)	Stack Conc. (μg/dscm)
Test Run 1 Pair 4 T/C DUN1-VO-052	P03809	Unknown	4.92	248.48
		silane, fluorotrimethyl-	0.517	26.11
		methane, trichlorofluoro-	0.239	12.07
Test Run 1 Cond. 4 DUN1-VO-060	P03742	Unknown	0.753	38.03

TABLE 5-34

STACK GAS VOST VOLATILE TENTATIVELY IDENTIFIED COMPOUNDS

Sample Name	File #	Tentative Compound Name	Amount (μg)	Stack Conc. (μg/dscm)
Test Run 2 Pair 1 Tenax DUN2-VO-126	P03813	Unknown	1.70	85.43
		silane, fluorotrimethyl-	0.521	26.18
		(E)-3-penten-1-ol (low probability)	0.048	2.41
		2-butenal, (Z)- or (E)-isomer	0.031	1.56
		2-methyl furan	0.066	3.32
		2H-1,4-benzothiazine, 3,4-dihydro-	0.185	9.30
		cyclotrisiloxane, hexamethyl-	2.58	129.65
		1. 1H-benzotriazole, 5-methoxy- 2. 2H-indol-2-one, 1,3-dihydro-5-hydro- (Both low probability)	0.428	21.51
Test Run 2 Pair 1 T/C DUN2-VO-127	P03822	Unknown	6.36	319.60
		silane, fluorotrimethyl-	0.649	32.61
Test Run 2 Cond. 1 DUN2-VO-138	P03744	Unknown	0.748	37.59
Test Run 2 Pair 2 Tenax DUN2-VO-128	P03828	Unknown	2.41	123.59
		silane, fluorotrimethyl-	0.170	8.72
		hexane	0.050	2.56
		1. acetic acid, (trimethylsilyl)- 2. silanol, trimethyl-	0.327	16.77
		Unknown	0.050	2.56
		cyclotrisiloxane, hexamethyl-	1.18	60.51
		silane, diethoxydimethyl-	0.470	24.10

TABLE 5-34

STACK GAS VOST VOLATILE TENTATIVELY IDENTIFIED COMPOUNDS

Sample Name	File #	Tentative Compound Name	Amount (μg)	Stack Conc. (μg/dscm)
Test Run 2 Pair 2 T/C DUN2-VO-131	P03823	Unknown	9.60	492.31
		silane, fluorotrimethyl-	0.924	47.38
Test Run 2 Cond. 2 DUN2-VO-139	P03745	Unknown	0.699	35.85
Test Run 2 Pair 3 Tenax DUN2-VO-130	P03829	Unknown	1.37	70.62
		silane, fluorotrimethyl-	0.354	18.25
		Unknown	0.030	1.55
		hexane	0.047	2.42
		2-cyclopenten-1-one	0.035	1.80
		2H-1,4-benzothiazine, 3,4-dihydro-	0.140	7.22
		arsenous acid, tris(trimethylsilyl)-	1.51	77.84
		rhodanine (Low probability)	0.420	21.65
Test Run 2 Pair 3 T/C DUN2-VO-131	P03824	Unknown	7.41	381.96
		silane, fluorotrimethyl-	0.632	32.58
Test Run 2 Cond. 3 DUN2-VO-140	P03746	Unknown	0.722	37.22
Test Run 2 Pair 4 Tenax DUN2-VO-132	P03830	Unknown	1.29	66.15
		silane, fluorotrimethyl-	0.219	11.23
		hexane	0.060	3.08
		Unknown	0.039	2.00
		Unknown	0.112	5.74
		cyclotrisiloxane, hexamethyl-	0.880	45.13
		silane, diethoxydimethyl-	0.266	13.64

TABLE 5-34

STACK GAS VOST VOLATILE TENTATIVELY IDENTIFIED COMPOUNDS

Sample Name	File #	Tentative Compound Name	Amount (μg)	Stack Conc. (μg/dscm)
Test Run 2 Pair 4 T/C DUN2-VO-133	P03825	Unknown	8.61	441.54
		silane, fluorotrimethyl-	0.629	32.26
Test Run 2 Cond. 4 DUN2-VO-141	P03747	Unknown	0.703	36.05

TABLE 5-34

STACK GAS VOST VOLATILE TENTATIVELY IDENTIFIED COMPOUNDS

Sample Name	File #	Tentative Compound Name	Amount (μg)	Stack Conc. (μg/dscm)
Test Run 3 Pair 1 Tenax DUN3-VO-207	P03831	Unknown	0.906	46.46
		silane, fluorotrimethyl-	0.224	11.49
		Unknown	0.013	0.67
		Unknown	0.014	0.72
		Unknown	0.012	0.62
		Unknown	0.011	0.56
		cyclotrisiloxane, hexamethyl-	0.435	22.31
		silane, diethoxydimethyl- (Low probability)	0.145	7.44
Test Run 3 Pair 1 T/C DUN3-VO-208	P03841	Unknown	10.9	558.97
		silane, fluorotrimethyl-	0.553	28.36
Test Run 3 Cond. 1 DUN3-VO-219	P03749	Unknown	0.721	36.97
Test Run 3 Pair 2 Tenax DUN3-VO-209	P03832	Unknown	4.28	218.37
		silane, fluorotrimethyl-	0.431	21.99
		cyclotrisiloxane, hexamethyl-	0.520	26.53
		tetrahydro-1,3-thiazine-2-thione (Low probability)	0.117	5.97
Test Run 3 Pair 2 T/C DUN3-VO-210	P03842	Unknown	11.5	586.73
		silane, fluorotrimethyl-	0.388	19.80
Test Run 3 Cond. 2 DUN3-VO-220	P03750	Unknown	0.553	28.21

TABLE 5-34

STACK GAS VOST VOLATILE TENTATIVELY IDENTIFIED COMPOUNDS

Sample Name	File #	Tentative Compound Name	Amount (µg)	Stack Conc. (µg/dscm)
Test Run 3 Pair 3 Tenax DUN3-VO-211	P03846	Unknown	1.88	96.41
		silane, fluorotrimethyl-	0.367	18.82
		Unknown	0.039	2.00
		Unknown	0.034	1.74
		Unknown	0.089	4.56
		silane, diethoxydimethyl- (Low probability)	0.230	11.79
Test Run 3 Pair 3 T/C DUN3-VO-212	P03843	Unknown	11.5	589.74
		silane, fluorotrimethyl-	0.374	19.18
Test Run 3 Cond. 3 DUN3-VO-221	P03751	Unknown	0.625	32.05
Test Run 3 Pair 4 Tenax DUN3-VO-213	P03847	Unknown	0.776	39.39
		silane, fluorotrimethyl-	0.273	13.86
		Unknown	0.021	1.07
		hexane	0.029	1.47
		Unknown	0.049	2.49
		cyclotrisiloxane, hexamethyl-	0.606	30.76
		1. carbamodithioic acid, acetyl-, meth 2. 2H-indol-2-one, 1,3-dihydro-5-hydro-	0.281	14.26
Test Run 3 Pair 4 T/C DUN3-VO-214	P03844	Unknown	7.25	368.02
		silane, fluorotrimethyl-	0.625	31.73
Test Run 3 Cond. 4 DUN3-VO-222	P03752	Unknown	0.574	29.14

STACK GAS VOST VOLATILE TENTATIVELY IDENTIFIED COMPOUNDS

Sample Name	File #	Tentative Compound Name	Amount (μg)	Stack Conc. (μg/dscm)
Test Run 4 Pair 1 Tenax DUN4-VO-288	P03848	Unknown	1.55	79.08
		silane, fluorotrimethyl-	0.496	25.31
		Unknown	0.036	1.84
		Unknown	0.024	1.22
		Unknown	0.027	1.38
		2-methyl-furan	0.036	1.84
		Unknown	0.023	1.17
		1,2-benzisothiazol-3(2H)-one	0.428	21.84
		cyclotrisiloxane, hexamethyl-	0.748	38.16
		tetrahydro-1,3-thiazine-2-thione	0.205	10.46
Test Run 4 Pair 1 T/C DUN4-VO-289	P03859	Unknown	12.2	622.45
		silane, fluorotrimethyl-	0.533	27.19
Test Run 4 Cond. 1 DUN4-VO-300	P03759	Unknown	0.570	29.08
Test Run 4 Pair 2 Tenax DUN4-VO-290	P03849	Unknown	0.555	28.46
		silane, fluorotrimethyl-	0.224	11.49
		tetrahydro-3-methyl-furan	0.011	0.56
		3(2H)-pyridazinone, 6-methyl-	0.013	0.67
		Unknown	0.015	0.77
		Unknown	0.027	1.38
		Unknown	0.015	0.77
		Unknown	0.063	3.23
		cyclotrisiloxane, hexamethyl-	0.486	24.92
		silane, diethoxydimethyl-	0.195	10.00

TABLE 5-34

STACK GAS VOST VOLATILE TENTATIVELY IDENTIFIED COMPOUNDS

Sample Name	File #	Tentative Compound Name	Amount (μg)	Stack Conc. (μg/dscm)
Test Run 4 Pair 2 T/C DUN4-VO-291	P03860	Unknown	13.1	671.79
		silane, fluorotrimethyl-	0.417	21.38
Test Run 4 Cond. 2 DUN4-VO-301	P03760	Unknown	0.716	36.72
Test Run 4 Pair 3 Tenax DUN4-VO-292	P03850	Unknown	0.877	44.52
		silane, fluorotrimethyl-	0.236	11.98
		hydroxylamine, O-pentyl-	0.035	1.78
		Unknown	0.017	0.86
		Unknown	0.028	1.42
		Unknown	0.018	0.91
		1,2-butenal, (E)-	0.013	0.66
		Unknown	0.019	0.96
		Unknown	0.016	0.81
		Unknown	0.023	1.17
		Unknown	0.071	3.60
		cyclotrisiloxane, hexamethyl-	0.678	34.42
		urea, 2-propenyl-	0.049	2.49
		Unknown	0.179	9.09
Test Run 4 Pair 3 T/C DUN4-VO-293	P03861	Unknown	12.7	644.67
		silane, fluorotrimethyl-	0.353	17.92
Test Run 4 Cond. 3 DUN4-VO-302	P03762	Unknown	0.648	32.89

TABLE 5-34

STACK GAS VOST VOLATILE TENTATIVELY IDENTIFIED COMPOUNDS

Sample Name	File #	Tentative Compound Name	Amount (μg)	Stack Conc. (μg/dscm)
Test Run 4 Pair 4 Tenax DUN4-VO-294	P03865	Unknown	2.85	144.67
		silane, fluorotrimethyl-	0.786	39.90
		Unknown	0.043	2.18
		Unknown	0.068	3.45
		Unknown	0.044	2.23
		Unknown	0.037	1.88
		Unknown	0.057	2.89
		1,2-benzisothiazol-3(2H)-one	0.265	13.45
		cyclotrisiloxane, hexamethyl-	0.672	34.11
		silane, diethoxydimethyl-	0.265	13.45
Test Run 4 Pair 4 T/C DUN4-VO-295	P03862	Unknown	5.13	260.41
		Unknown	0.051	2.59
Test Run 4 Cond. 4 DUN4-VO-303	P03766	Unknown	0.536	27.21

TABLE 5-35

FUEL OIL SAMPLES
VOLATILE ORGANIC COMPOUNDS

Test Run	Sample ID	Sample No.	Compound	Concentration (μg/mg)
1	Pre Test	VO-076	M&P Xylene O-Xylene	1.28 ND[a]
	Post Test	VO-991	M&P Xylene O-Xylene	0.93[b] ND
2	Pre Test	VO-157	M&P Xylene O-Xylene	1.29 ND
	Post Test	VO-158	M&P Xylene O-Xylene	1.1 0.33[b]
3	Pre Test	VO-238	M&P Xylene O-Xylene	1.28 ND
	Post Test	VO-239	M&P Xylene O-Xylene	1.09[b] ND
4	Pre Test	VO-319	M&P Xylene O-Xylene	1.39 0.39[b]
	Post Test	VO-320	M&P Xylene O-Xylene	1.38 0.25[b]
Blanks	Methanol Water	PO3879	M&P Xylene O-Xylene	ND ND
	Lab Water	PO3870	M&P Xylene O-Xylene	ND ND

[a]ND = none detected
[b]Reported value based on signal below method detection level. An estimate was attempted due to dilution of the original sample.

TABLE 5-36

AQUEOUS SAMPLES VOLATILE ORGANICS SUMMARY

Test Run	Sample ID	Sample No.	Compound	Concentration (μg/L)
1	Quench Liquid Pre Test	VO-994	--	ND[a]
	Quench Liquid Post Test	VO-996	--	ND
	Process Water Pre Test	(Not Sampled)		
	Process Water Post Test	(Not Sampled)		
	Water Lab Blank	PO3781	--	ND
2	Quench Liquid Pre Test	VO-987	--	ND
	Quench Liquid Post Test	VO-985	--	ND
	Process Water Pre Test	(Not Sampled)		
	Process Water Post Test	(Not Sampled)		
	Water Lab Blank	PO3781	--	ND
3	Quench Liquid Pre Test	VO-981	--	ND
	Quench Liquid Post Test	VO-979	--	ND
	Process Water Pre Test	VO-972	bromoform	10.8
	Process Water Post Test	VO-969	acetone bromoform	8.3 13.3
	Water Lab Blank	PO3781	--	ND
4	Quench Liquid Pre Test	VO-965	--	ND
	Quench Liquid Post Test	VO-963	--	ND
	Process Water Pre Test	VO-956	acetone bromoform	6.5 13.6
	Process Water Post Test	VO-954	bromoform	8.21
	Water Lab Blank	PO3781	--	ND

[a]ND = None detected; detection limits provided in Table 5-37.

TABLE 5-37

VOLATILE ORGANICS
DETECTION LIMITS IN AQUEOUS SAMPLES

Compound	Detection Limit (μg/L)
chloromethane	1
vinyl chloride	1
bromomethane	2
chloroethane	2
1,1-dichloroethene	1
acetone	2
methyl iodide	1
carbon disulfide	4
methylene chloride	1
trans-1,2-dichloroethene	1
1,1-dichloroethane	1
2-butanone	4
chloroform	1
1,1,1-trichloroethane	2
carbon tetrachloride	1
benzene	1
1,2-dichloroethane	1
trichloroethene	1
1,2-dichloropropane	1
bromodichloromethane	1
cis-1,3-dichloropropene	1
2-hexanone	1
toluene	1
trans-1,2-dichloropropene	1
1,1,2-trichloroethane	1
tetrachloroethene	1
4-methyl-2-pentanone	1

TABLE 5-37

VOLATILE ORGANICS
DETECTION LIMITS IN AQUEOUS SAMPLES

Compound	Detection Limit (μg/L)
dibromochloromethane	1
chlorobenzene	1
ethylbenzene	1
m- & p-xylene	1
o-xylene	1
styrene	1
bromoform	1
1,1,2,2-tetrachloroethane	1

TABLE 5-38

VOLATILE TENTATIVELY IDENTIFIED COMPOUNDS
IN QUENCH LIQUID SAMPLES

Sample Name	File No.	Tentative Compound Name	Amount (μg/L)
Test Run 1 Post DUN1-VO-996	PO3789	Unknown	575
Test Run 2 Post DUN2-VO-985	PO3791	Unknown	512
Test Run 3 Post DUN3-VO-979	PO3793	Unknown	495
Test Run 4 Post DUN4-VO-963	PO3795	Unknown	636

TABLE 5-39

VOLATILE RESULTS IN ASH

Sample ID	Sample No.	Compound	Concentration, μg/kg
Lab Blank Water	PO3870	--	ND[a]
Primary Chamber Ash[b] (TCLP)	VO-390	--	ND
Baghouse Ash[b] (TCLP)	VO-396	acetone	90

[a]ND = None detected.
[b]Ash samples were collected as a composite of all four test runs.

TABLE 5-40

VOLATILE TENTATIVELY IDENTIFIED COMPOUNDS IN ASH SAMPLE

Sample Name	Sample No.	Tentative Compound Name	Amount ($\mu g/g$)
Baghouse Ash (12/12/94)	DUN4-VO-396	No tentatively identified compounds	--
Furnace Ash (12/12/94)	DUN4-VO-390	No tentatively identified compounds	--

TABLE 5-41

METHOD 5 ACID TRAIN CONDITIONS AND RESULTS

		Test Run			
Parameter	Units	1	2	3	4
Date	--	12/5/94	12/6/94	12/7/94	12/8/94
Sample Time	minutes	120	120	120	120
Sample Volume	dscf dscm	56.10 1.59	63.56 1.80	66.04 1.87	66.49 1.88
Stack Gas Flow Rate	dscfm acfm	2893 5915	2837 5984	2893 6056	2977 6181
Stack Gas Temperature	°F	230	237	234	232
Stack Gas Moisture	%	36.4	37.9	37.7	37.2
Percent Isokinetic	%	105.1	100.0	101.9	99.7
HCl Concentration	mg/dscm	54.441	60.220	62.745	64.562
HCl Emission Rate	lb/hr	0.59	0.63	0.68	0.72
HF Concentration	mg/dscm	54.441	60.220	61.823	69.045
HF Emission Rate	lb/hr	0.59	0.64	0.67	0.77
Part. Catch	mg	5.5	4.9	2.9	4.2
Part. Concentration					
@ 7% O_2	gr/dscf mg/dscm	0.0021 4.847	0.0017 3.849	0.0010 2.309	0.0014 3.287
@ 12% CO_2	gr/dscf mg/dscm	0.0024 5.539	0.0019 4.356	0.0012 2.658	0.0017 3.770
Oxygen Concentration[a]	%	11.0	11.1	11.6	11.5
CO_2 Concentration[a]	%	7.5	7.5	7.0	7.1
Leak Checks:					
Pitot Pre Test		Pass	Pass	Pass	Pass
Pitot Post Test		Pass	Pass	Pass	Pass
Train Pre Test	cfm at in. Hg	0.005 15.0	0.002 15.0	0.002 15.0	0.003 15.5
Train Post Test	cfm at in. Hg	0.002 10.5	0.007 14.0	0.002 12.0	0.002 12.0

[a]Orsat values at stack.

TABLE 5-42

ACID TRAIN RESULTS
HCl IN TEST RUN 1

Sample No.	Identification	Volume, mL	Dilution Factor	Chloride, ppm	HCl, μg	CL_2, μg
DUN1-C1-003	Impinger 1	434	25	6.368	71,039	
DUN1-C1-004	Impinger 2	520	3	9.266	14,862	
DUN1-C1-005	Impinger 3	203	1	1.503	314	
DUN1-C1-006	Impinger 4	193	1	0.418		161.35
DUN1-C1-007	Impinger 5	187	10	0.252		942.48
TOTALS		1537			86,215	1,103.83
DUN1-C1-008	0.1N H_2SO_4 Blank	147	1	ND[a]	ND	--
DUN1-C1-009	0.1N NaOH Blank	95	1	ND	--	ND

[a]ND = Not detected

DUNGB5.W51 330

TABLE 5-43

ACID TRAIN RESULTS
HCl IN TEST RUN 2

Sample No.	Identification	Volume, mL	Dilution Factor	Chloride, ppm	HCl, μg	CL_2, μg
DUN2-Cl-084	Impinger 1	412	25	8.387	88,820	
DUN2-Cl-085	Impinger 2	505	3	9.971	15,532	
DUN2-Cl-086	Impinger 3	203	3	4.531	2,837	
DUN2-Cl-087	Impinger 4	210	3	0.359		452.34
DUN2-Cl-088	Impinger 5	190	6	0.405		923.40
TOTALS		1520			107,189	1,375.74
DUN2-Cl-089	0.1N H_2SO_4 Blank	69	1	ND[a]	ND	--
DUN2-Cl-090	0.1N NaOH Blank	113	1	ND	--	ND

[a]ND = Not detected

TABLE 5-44

ACID TRAIN RESULTS
HCl IN TEST RUN 3

Sample No.	Identification	Volume, mL	Dilution Factor	Chloride, ppm	HCl, μg	CL_2, μg
DUN3-C1-165	Impinger 1	395	25	9.505	96,506	
DUN3-C1-166	Impinger 2	435	3	10.079	13,524	
DUN3-C1-167	Impinger 3	437	3	5.707	7,693	
DUN3-C1-168	Impinger 4	170	3	0.407		415.14
DUN3-C1-169	Impinger 5	190	10	0.175		665.00
TOTALS		1627			117,723	1,080.14
DUN3-C1-170	0.1N H_2SO_4 Blank	68	1	ND[a]	ND	--
DUN3-C1-171	0.1N NaOH Blank	75	1	ND	--	ND

[a]ND = Not detected

DUNGB5.W51 330

TABLE 5-45

ACID TRAIN RESULTS
HCl IN TEST RUN 4

Sample No.	Identification	Volume, mL	Dilution Factor	Chloride, ppm	HCl, μg	CL_2, μg
DUN4-C1-246	Impinger 1	455	25	8.823	103,189	
DUN4-C1-247	Impinger 2	475	3	9.153	13,410	
DUN4-C1-248	Impinger 3	345	3	4.467	4,754	
DUN4-C1-249	Impinger 4	175	3	0.759		796.95
DUN4-C1-250	Impinger 5	180	10	0.187		673.20
TOTALS		1630			121,353	1,470.15
DUN4-C1-251	0.1N H_2SO_4 Blank	56	1	ND[a]	ND	--
DUN4-C1-252	0.1N NaOH Blank	83	1	ND	--	ND

[a]ND = Not detected

TABLE 5-46

ACID TRAIN RESULTS
HF IN TEST RUN 1

Sample No.	Identification	Volume, mL	Dilution Factor	Fluoride, ppm	HF, μg
DUN1-C1-003	Impinger 1	434	25	5.311	60,657
DUN1-C1-004	Impinger 2	520	3	15.612	25,637
DUN-C1-005	Impinger 3	203	1	0.907	194
DUN-C1-006	Impinger 4	193	1	0.137	27.83
DUN-C1-007	Impinger 5	187	10	0.059	116.14
TOTALS		1537			86,632

*ND = Not detected

DUNGB5.W51 330

TABLE 5-47

ACID TRAIN RESULTS
HF IN TEST RUN 2

Sample No.	Identification	Volume, mL	Dilution Factor	Fluoride, ppm	HF, μg
DUN2-C1-084	Impinger 1	412	25	6.739	73,065
DUN2-C1-085	Impinger 2	505	3	18.947	30,215
DUN2-C1-086	Impinger 3	203	3	8.796	5,639
DUN2-C1-087	Impinger 4	210	1	0.177	39.13
DUN2-C1-088	Impinger 5	190	1	0.097	19.40
TOTALS		1520			108,631

*ND = Not detected

TABLE 5-48

ACID TRAIN RESULTS
HF IN TEST RUN 3

Sample No.	Identification	Volume, mL	Dilution Factor	Fluoride, ppm	HF, μg
DUN3-C1-165	Impinger 1	395	25	7.425	77,181
DUN3-C1-166	Impinger 2	435	3	17.619	24,203
DUN3-C1-167	Impinger 3	437	3	9.941	13,719
DUN3-C1-168	Impinger 4	170	3	0.276	148.17
DUN3-C1-169	Impinger 5	190	10	0.085	170.00
TOTALS		1627			115,421

*ND = Not detected

DUNGB5.W51 330

TABLE 5-49

ACID TRAIN RESULTS
HF IN TEST RUN 4

Sample No.	Identification	Volume, mL	Dilution Factor	Fluoride, ppm	HF, μg
DUN4-C1-246	Impinger 1	455	25	7.811	93,526
DUN4-C1-247	Impinger 2	475	3	17.243	25,865
DUN4-C1-248	Impinger 3	345	3	8.612	9,383
DUN4-C1-249	Impinger 4	175	3	0.436	240.95
DUN4-C1-250	Impinger 5	180	10	0.128	242.53
TOTALS		1630			129,257

*ND = Not detected

TABLE 5-50

METHOD 5 MULTIPLE METALS TRAIN CONDITIONS AND RESULTS

		Test Run			
Parameter	Units	1	2	3	4
Date	--	12/05/94	12/06/94	12/07/94	12/08/94
Sample Time	minutes	120	120	120	120
Sample Volume	dscf dscm	61.84 1.75	68.35 1.94	68.97 1.95	67.35 1.91
Stack Gas Flow Rate	dscfm	2942	2903	2717	2763
Stack Gas Temperature	°F	232	237	236	230
Stack Gas Moisture	%	37.59	37.72	40.22	37.30
Percent Isokinetic	%	106.6	93.2	100.5	96.5
Part. Catch	mg	4.7	4.5	5.5	38.8
Particulate Concentration					
@ 7% O_2	gr/dscf mg/dscm	0.0016 3.553	0.0014 3.207	0.0017 3.812	0.0125 28.701
@ 12% CO_2	gr/dscf mg/dscm	0.0018 4.034	0.0016 3.641	0.0019 4.356	0.0145 33.143
Oxygen Concentration[a]	%	10.8	11.2	11.0	11.3
CO_2 Concentration[a]	%	7.7	7.4	7.5	7.2
Leak Checks:					
Pitot Pre Test		pass	pass	pass	pass
Pitot Post Test		pass	pass	pass	pass
Train Pre Test	cfm at in. Hg	0.002 15.0	0.006 19.0	0.005 16.0	0.003 16.0
Train Post Test	cfm at in. Hg	0.000 9.0	0.002 10.0	0.000 10.0	0.001 9.0

[a]Orsat values at stack.

TABLE 5-51

STACK GAS ANALYSES FOR METALS

		Test Run 1	Test Run 2	Test Run 3	Test Run 4
Sample Volume (dscm)		1.59/1.75[a]	1.75/1.94[a]	1.95	1.91
Emitted Substances[b]		Concentration, μg/dscm[c]			
Metals	Antimony	ND[d]	ND	ND	ND
	Arsenic	ND	ND	ND	ND
	Barium	5.7	6.4	6.9	6.7
	Beryllium	ND	ND	0.01	0.006
	Cadmium	6.5	0.4	ND	4.6
	Chromium	11.3	7.1	7.3	35
	Cobalt	ND	ND	ND	2.8
	Copper	12.5	5.0	1.1	32
	Lead	ND	58	ND	5.0
	Manganese	31	18	27	231
	Mercury	0.46	0.32	0.61	0.63
	Nickel	5.1	4.0	4.0	54
	Selenium	ND	ND	ND	ND
	Silver	ND	ND	ND	ND
	Thallium	ND	ND	ND	ND
	Tin	4.5	5.2	29	47
	Vanadium	ND	ND	0.8	4.4
	Zinc	12	16	7.5	488

[a]Concentration for front half is based on M5AT data and concentration for back half is based on MMT data. These were added to determine a total concentration. Sample volumes were:

	TR #1	TR #2
M5AT dscm	1.59	1.75
MMT dscm	1.75	1.94

[b]Reported with two significant figures if greater than 1 μg/dscm and one significant figure if less than 1 μg/dscm.
[c]Values blank corrected based on field blanks.
[d]ND = Not detected; detection limits listed in Table 5-56.

TABLE 5-52

STACK GAS METALS RESULTS - TEST RUN 1
(All Results Reported in Total μg)

			Field Blank	
Metal	Front[a]	Back[b]	Front[a]	Back[b]
Antimony	<5.00	<5.25	<5.00	<5.60
Arsenic	<5.00	<5.25	<5.00	<5.60
Barium	8.70	9.91	26.8	<2.24
Beryllium	<0.500	<0.525	<0.500	<0.560
Cadmium	10.3	<0.525	<0.500	<0.560
Chromium	17.0	13.2	11.1	<1.12
Cobalt	<2.00	<2.10	<2.00	<2.24
Copper	19.8	3.32	<2.00	<3.92
Lead	<5.00	<3.25	<5.00	<5.60
Manganese	28.6	36.4	<2.00	13.3
Mercury	<0.100[c]	<0.833	Not Analyzed	<0.575[d]
Nickel	12.9	<2.10	4.75	<2.24
Selenium	<5.00	<5.25	<5.00	<5.60
Silver	<5.00	<5.25	<5.00	<5.60
Thallium	<1.00	<1.05	<1.00	<1.12
Tin	<2.00	16.7	<2.00	8.88
Vanadium	<1.00	<1.05	<1.00	<1.12
Zinc	37.1	15.2	25.3	7.26

[a]Because the MMT front half sample was consumed testing for mercury, the balance of the metals analysis was done using the front half M5AT sample. The front half blank is the M5AT blank.
[b]The back half sample is from the MMT. The corresponding MMT blank was used for blank correction.
[c]Mercury is MMT data.
[d]The HNO_3/H_2O_2 impinger solutions were analyzed for mercury; none was detected

TABLE 5-53

STACK GAS METALS RESULTS - TEST RUN 2
(All Results Reported in Total μg)

			Field Blank	
Metal	Front[a]	Back[b]	Front[a]	Back[b]
Antimony	<5.00	<5.30	<5.00	<5.60
Arsenic	<5.00	<5.30	<5.00	<5.60
Barium	7.05	12.3	26.8	<2.24
Beryllium	<0.500	<0.530	<0.500	<0.560
Cadmium	0.752	<0.530	<0.500	<0.560
Chromium	12.4	12.4	11.1	<1.12
Cobalt	<2.00	<2.12	<2.00	<2.24
Copper	8.98	3.79	<2.00	3.92
Lead	<5.00	112	<5.00	<5.60
Manganese	20.7	26.8	<2.00	13.3
Mercury	<0.100[a]	0.615	Not Analyzed	<0.575[d]
Nickel	9.73	2.32	4.75	<2.24
Selenium	<5.00	<5.30	<5.00	<5.60
Silver	<5.00	<5.30	<5.00	<5.60
Thallium	<1.00	<1.06	<1.00	<1.12
Tin	<2.00	18.9	<2.00	8.88
Vanadium	<1.00	<1.06	<1.00	<1.12
Zinc	44.5	17.2	25.3	7.26

[a]Because the MMT front half sample was consumed testing for mercury, the balance of the metals analysis was done using the front half M5AT sample. The front half blank is the M5AT blank.
[b]The back half sample is from the MMT. The corresponding MMT blank was used for blank correction.
[c]Mercury is MMT data.
[d]The HNO_3/H_2O_2 impinger solutions were analyzed for mercury, none was detected

TABLE 5-54

STACK GAS METALS RESULTS - TEST RUN 3
(All Results Reported in Total μg)

			Field Blank	
Metal	Front	Back	Front	Back
Antimony	<5.00	<5.30	<5.00	<5.60
Arsenic	<5.00	<5.30	<5.00	<5.60
Barium	12.9	13.4	28.8	<2.24
Beryllium	0.561	0.530	0.534	<0.560
Cadmium	<0.500	0.530	<0.500	<0.560
Chromium	9.48	13.4	8.67	<1.12
Cobalt	<2.00	<2.12	<2.00	<2.24
Copper	4.32	4.51	2.76	3.92
Lead	<5.00	<5.30	<5.00	<5.60
Manganese	25.2	45.6	4.70	13.3
Mercury	<0.500	1.19	<0.500	<0.575[a]
Nickel	8.65	4.06	4.82	<2.24
Selenium	<5.00	<5.30	<5.00	<5.60
Silver	<5.00	<5.30	<5.00	<5.60
Thallium	<1.00	<1.06	<1.00	<1.12
Tin	<2.00	65.3	<2.00	8.88
Vanadium	<1.00	1.48	<1.00	<1.12
Zinc	32.9	22.0	44.6	7.26

[a]The HNO_3/H_2O_2 impinger solutions were analyzed for mercury; none was detected

TABLE 5-55

STACK GAS METALS RESULTS - TEST RUN 4
(All Results Reported in Total μg)

			Field Blank	
Metal	Front	Back	Front	Back
Antimony	<5.00	<5.30	<5.00	<5.60
Arsenic	<5.00	<5.30	<5.00	<5.60
Barium	29.5	12.1	28.8	<2.24
Beryllium	0.545	<0.530	0.534	<0.560
Cadmium	7.58	1.25	<0.500	<0.560
Chromium	62.8	13.5	8.67	<1.12
Cobalt	5.31	<2.12	<2.00	<2.24
Copper	64.0	4.34	2.76	3.92
Lead	9.63	<5.30	<5.00	<5.60
Manganese	246	214	4.70	13.3
Mercury	<1.00	1.20	<0.500	<0.575[a]
Nickel	105	2.54	4.82	<2.24
Selenium	<5.00	<5.30	<5.00	<5.60
Silver	<5.00	<5.30	<5.00	<5.60
Thallium	<1.00	<1.06	<1.00	<1.12
Tin	<2.00	98.5	<2.00	8.88
Vanadium	8.38	<1.06	<1.00	<1.12
Zinc	949	34.1	44.6	7.26

[a]The HNO_3/H_2O_2 impinger solutions were analyzed for mercury; none was detected

TABLE 5-56

METALS
DETECTION LIMITS IN STACK GAS
(For Metals Not Detected in Either Front or Back of Sample)

Metal	TR #1 µg/dscm	TR #2 µg/dscm	TR #3 µg/dscm	TR #4 µg/dscm
Antimony	3.15	2.78	2.71	2.78
Arsenic	3.15	2.78	2.71	2.78
Barium	NA[a]	NA	NA	NA
Beryllium	0.315	0.278	NA	NA
Cadmium	NA	NA	NA	NA
Chromium	NA	NA	NA	NA
Cobalt	1.26	1.11	1.09	NA
Copper	NA	NA	NA	NA
Lead	3.15	NA	2.71	NA
Manganese	NA	NA	NA	NA
Mercury	NA	NA	NA	NA
Nickel	NA	NA	NA	NA
Selenium	3.15	2.78	2.71	2.78
Silver	3.15	2.78	2.71	2.78
Thallium	0.63	0.56	0.54	0.56
Tin	NA	NA	NA	NA
Vanadium	0.63	0.56	NA	NA
Zinc	NA	NA	NA	NA

[a]NA = Not Applicable. Detectable quantity of the metal was found in either the front half or the back half of the sample.

TABLE 5-57

METALS RESULTS IN QUENCH LIQUID SAMPLES
(All results in μg/mL)

Metal	Test Run 1 (12-5-94)		Test Run 2 (12-6-94)		Test Run 3 (12-7-94)		Test Run 4 (12-8-94)	
	DUN1-MT-078 Pre-Test	DUN1-MT-081 Post-Test	DUN2-MT-159 Pre-Test	DUN2-MT-162 Post-Test	DUN3-MT-240 Pre-Test	DUN3-MT-243 Post-Test	DUN4-MT-321 Pre-Test	DUN4-MT-324 Post-Test
Antimony	<0.0625	<0.0625	<0.0625	<0.0625	<0.0625	<0.0625	<0.0625	<0.0625
Arsenic	<0.0625	<0.0625	<0.0625	<0.0625	<0.0625	<0.0625	<0.0625	<0.0625
Barium	<0.0250	0.0277	<0.0250	<0.0250	<0.0250	<0.0250	<0.0250	<0.0250
Beryllium	<0.00625	<0.00625	<0.00625	<0.00625	<0.0625	<0.00625	<0.00625	<0.00625
Cadmium	<0.00625	0.0248	0.0106	0.0137	0.00776	0.0306	0.0122	0.0491
Chromium	<0.0125	0.0722	<0.0125	0.0192	0.0560	0.0130	<0.0125	<0.0125
Cobalt	<0.0250	0.0727	<0.0250	0.0419	<0.0250	0.0522	<0.0250	0.0573
Copper	0.0481	0.385	0.581	0.232	0.0507	0.325	0.0495	0.258
Lead	<0.0625	<0.0625	<0.0625	<0.0625	<0.0625	<0.0625	<0.0625	<0.0625
Manganese	2.00	4.97	2.24	3.26	2.16	4.97	2.44	6.31
Mercury[a]	<0.001	<0.001	<0.001	<0.001	<0.005	<0.001	<0.001	<0.001
Nickel	0.181	1.68	0.235	0.957	0.177	0.979	0.480	0.934
Selenium	<0.0625	<0.0625	<0.0625	<0.0625	<0.0625	<0.0625	<0.0625	<0.0625
Silver	<0.0625	<0.0625	<0.0625	<0.0625	<0.0625	<0.0625	<0.0625	<0.0625
Thallium[b]	<0.0125	<0.0125	<0.0125	<0.0125	<0.0125	<0.0125	<0.0125	<0.0125
Tin	<0.0250	<0.0250	<0.0250	<0.0250	<0.0250	<0.0250	<0.0250	<0.0250
Vanadium	<0.0125	0.0195	<0.0125	0.0193	<0.0125	0.0453	<0.0125	0.0261
Zinc	0.181	1.11	0.247	0.744	0.211	1.07	0.239	1.40

[a]Mercury was determined by cold vapor AAS.
[b]Thallium was determined by graphite furnace AAS.
NOTE: Numbers with the prefix "<" indicate quantity less than detectable limits.

TABLE 5-58

METALS ANALYSES - PROCESS WATER SAMPLES
(All results in μg/mL)

Metal	Test Run 3 (12-7-94)		Test Run 4 (12-8-94)	
	DUN3-MT-976 Pre-Test	DUN3-MT-973 Post-Test	DUN4-MT-960 Pre-Test	DUN4-MT-957 Post-Test
Antimony	<0.0625	<0.0625	<0.0625	<0.0625
Arsenic	<0.0625	<0.0625	<0.0625	<0.0625
Barium	<0.0250	<0.0250	<0.0250	<0.0250
Beryllium	<0.00625	<0.00625	<0.00625	<0.00625
Cadmium	<0.00625	<0.00625	<0.00625	<0.00625
Chromium	<0.0125	<0.0125	<0.0125	<0.0125
Cobalt	<0.0250	<0.0250	<0.0250	<0.0250
Copper	<0.0250	<0.0250	<0.0250	<0.0250
Lead	<0.0625	<0.0625	<0.0625	<0.0625
Manganese	<0.0250	<0.0250	<0.0250	<0.0250
Mercury[a]	<0.001	0.002	<0.001	<0.001
Nickel	<0.0250	<0.0250	<0.0250	<0.0250
Selenium	<0.0625	<0.0625	<0.0625	<0.0625
Silver	<0.0625	<0.0625	<0.0625	<0.0625
Thallium[b]	<0.0125	<0.0125	<0.0125	<0.0125
Tin	<0.0250	<0.0250	0.0260	<0.0250
Vanadium	<0.0125	<0.0125	<0.0125	<0.0125
Zinc	<0.0250	<0.0250	<0.0250	<0.0250

[a]Mercury was determined by cold vapor AAS.
[b]Thallium was determined by graphite furnace AAS.
NOTE: Numbers with prefix "<" indicate quantity less than detectable limits.

DUNGB5.W51 330

TABLE 5-59

METALS RESULTS IN FUEL OIL SAMPLES
(All results in μg/g)

Metal	Test Run 1 (12-5-94)		Test Run 2 (12-6-94)		Test Run 3 (12-7-94)		Test Run 4 (12-8-94)	
	DUN1-MT-074 Pre-Test	DUN1-MT-075 Post-Test	DUN2-MT-155 Pre-Test	DUN2-MT-156 Post-Test	DUN3-MT-236 Pre-Test	DUN3-MT-237 Post-Test	DUN4-MT-317 Pre-Test	DUN4-MT-318 Post-Test
Antimony	5.68	8.79	<5.00	<5.00	<5.00	<5.00	6.96	<5.00
Arsenic	<5.00	<5.00	<5.00	<5.00	<5.00	<5.00	<5.00	<5.00
Barium	<2.00	<2.00	<2.00	<2.00	<2.00	<2.00	<2.00	<2.00
Beryllium	<0.500	<0.500	<0.500	<0.500	<0.500	<0.500	<0.500	<0.500
Cadmium	<0.500	<0.500	<0.500	<0.500	<0.500	<0.500	<0.500	<0.500
Chromium	<1.00	<1.00	0.981	<1.00	<1.00	1.10	1.52	<1.00
Cobalt	<2.00	<2.00	<2.00	<2.00	<2.00	<2.00	<2.00	<2.00
Copper	<2.00	<2.00	<2.00	<2.00	<2.00	<2.00	<2.00	<2.00
Lead	<5.00	<5.00	<5.00	<5.00	<5.00	<5.00	<5.00	<5.00
Manganese	<2.00	<2.00	<2.00	<2.00	<2.00	<2.00	<2.00	<2.00
Mercury[a]	<0.100	<0.100	<0.005	<0.005	<0.009	<0.100	<0.100	<0.100
Nickel	<2.00	<2.00	<2.00	<2.00	<2.00	<2.00	<2.00	<2.00
Selenium	<5.00	6.88	<5.00	<5.00	<5.00	<5.00	<5.00	<5.00
Silver	<5.00	<5.00	<5.00	<5.00	<5.00	<5.00	<5.00	<5.00
Thallium[b]	<1.00	<1.00	<1.00	<1.00	<1.00	<1.00	<1.00	<1.00
Tin	4.04	8.50	3.30	1.13	2.29	1.20	6.14	2.06
Vanadium	<1.00	<1.00	<1.00	<1.00	<1.00	<1.00	<1.00	<1.00
Zinc	<2.00	<2.00	<2.00	<2.00	<2.00	<2.00	<2.00	<2.00

[a]Mercury was determined by cold vapor AAS.
[b]Thallium was determined by graphite furnace AAS.
NOTE: Numbers with prefix "<" indicate quantity less than detectable limits.

TABLE 5-60

METALS ANALYSES OF COMPOSITE[a] ASH SAMPLES
(All results in μg/g)

Metal	DUN4-MT-388 Furnace Ash	DUN4-MT-934 Baghouse Ash
Antimony	35.9	12.2
Arsenic	35.2	33.9
Barium	1.495	43.5
Beryllium	0.630	<0.500
Cadmium	7.55	52.3
Chromium	3.87	323
Cobalt	19.6	41.0
Copper	159	300
Lead	33.5	1112
Manganese	6433	2608
Mercury[b]	<0.500	<0.500
Nickel	563	554
Selenium	160	245
Silver	<5.00	28.3
Thallium[c]	<1.00	<1.00
Tin	9.80	192
Vanadium	33.4	24.1
Zinc	318	9919

[a]Composite samples of all four test runs; collected at end of trial burn.
[b]Mercury was determined by cold vapor AAS.
[c]Thallium was determined by graphite furnace AAS.

Note: Numbers with prefix "<" indicates quantity less than detectable limits.

TABLE 5-61

REACTIVITY AND pH

				Reactivity (mg/L)	
Test Run	Sample ID	Sample Description	pH	CN	S
1	DUN1-VO-993 DUN1-MT-080	Quench Liquid Pre Quench Liquid Pre	4.1	<0.010	<0.5
	DUN1-VO-997 DUN1-MT-999	Quench Liquid Post Quench Liquid Post	2.6	<0.005	<0.5
2	DUN2-VO-988 DUN2-MT-161	Quench Liquid Pre Quench Liquid Pre	4	<0.008	<0.5
	DUN2-VO-986 DUN2-MT-990	Quench Liquid Post Quench Liquid Post	2.9	<0.005	<0.5
3	DUN3-VO-982 DUN3-MT-242	Quench Liquid Pre Quench Liquid Pre	4	<0.010	<0.5
	DUN3-VO-980 DUN3-MT-984	Quench Liquid Post Quench Liquid Post	2.8	<0.017	<0.5
	DUN3-VO-971 DUN3-MT-978	Process Water Pre Process Water Pre	8.5	<0.009	<0.5
	DUN3-VO-970 DUN3-MT-975	Process Water Post Process Water Post	8.2	0.018	<0.5
4	DUN4-VO-960 DUN4-MT-322	Quench Liquid Pre Quench Liquid Pre	4.1	<0.007	<0.5
	DUN4-VO-964 DUN4-MT-968	Quench Liquid Post Quench Liquid Post	3.1	<0.010	<0.5
	DUN4-VO-955 DUN4-MT-962	Process Water Pre Process Water Pre	7.5	<0.009	<0.5
	DUN4-VO-953 DUN4-MT-959	Process Water Post Process Water Post	7.7	0.008	<0.5

TABLE 5-62

REACTIVITY OF ASH SAMPLES

			Reactivity	
Test Run	Sample ID	Sample Description	CN	S
[a]	H590-88-2	Baghouse Ash	0.025	<2.00
[a]	H590-88-3	Furnace Ash	0.024	<2.00

[a]Samples are composites of all four test runs.

TABLE 5-63

AGENT FEED RATE AND DRE

	Test Run			
	1	2	3	4
Agent Feed (lb/hr)	10.3	10.3	10.3	10.3
Agent Concentration at LOQ (mg/m^3)	<0.00006	<0.00006	<0.00006	<0.00006
Average Gas Flow (acfm)[a]	6,029	6,046	6,001	5,953
Upper Limit of Agent Emission (lb/hr)[b]	$<1.355 \times 10^{-6}$	$<1.359 \times 10^{-6}$	$<1.348 \times 10^{-6}$	$<1.338 \times 10^{-6}$
DRE (%)	>99.9999868	>99.9999868	>99.9999869	>99.9999870

[a]Average of M5AT and MMT.
[b]Calculated from LOQ; maximum emission rate which could have escaped detection.

TABLE 5-64

TOTAL HYDROCARBONS IN STACK GAS
(Expressed as Propane)

Test Run	Gas Stream Monitor (ppm)	Condensate (ppm)	Total (ppm)	Stack Gas Flow (dscfm)	Emission Rate (lb/hr)
1	8.5	ND[a]	8.5	2796	0.16
2	8.5	ND	8.5	2923	0.17
3	5.0	ND	5.0	2929	0.10
4	9.0	ND	9.0	2875	0.18

[a]ND = Not detected; detection limits in condensate are <10 mg/L.

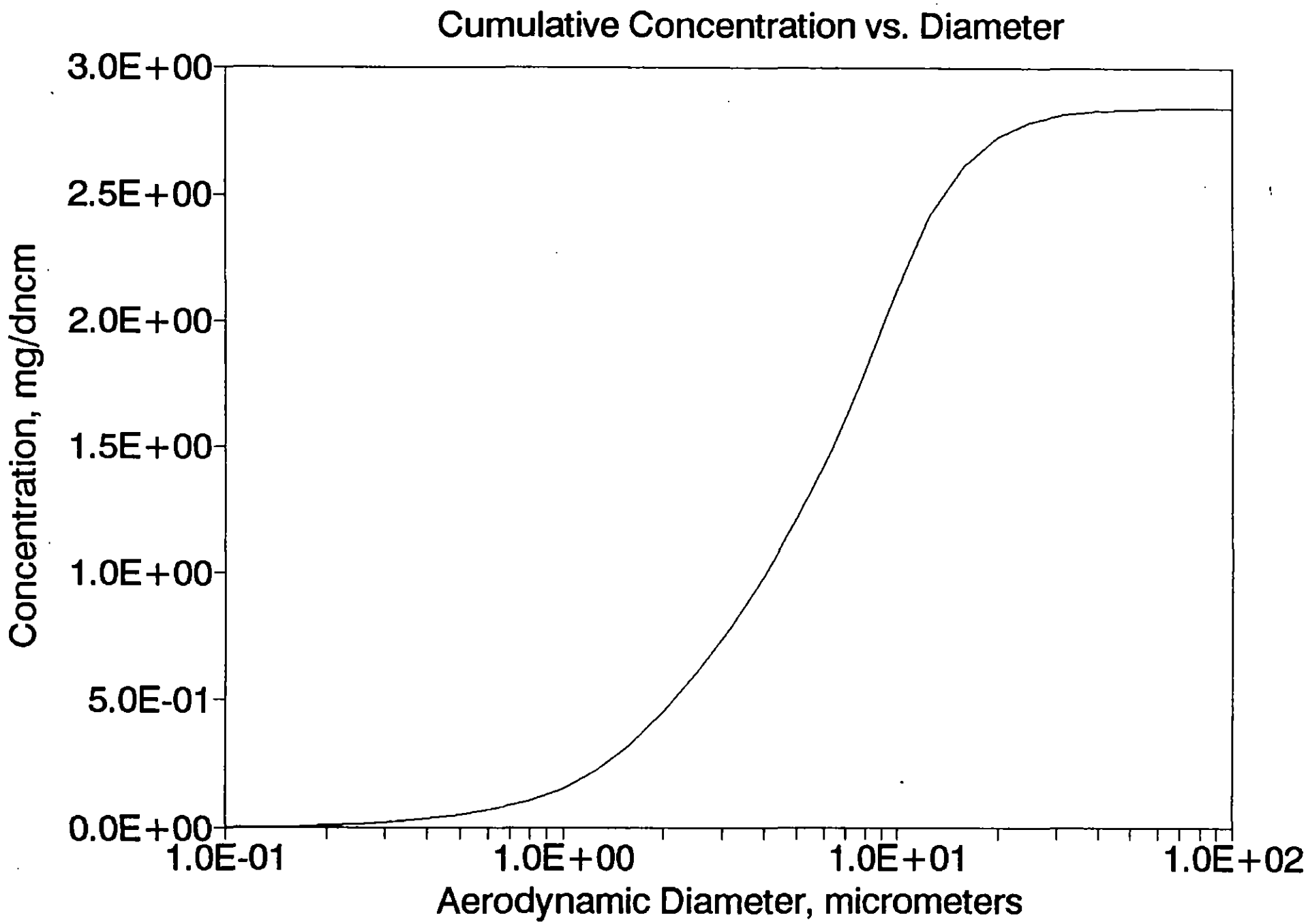

FIGURE 5-6
(TEST RUNS 2, 3 AND 4)

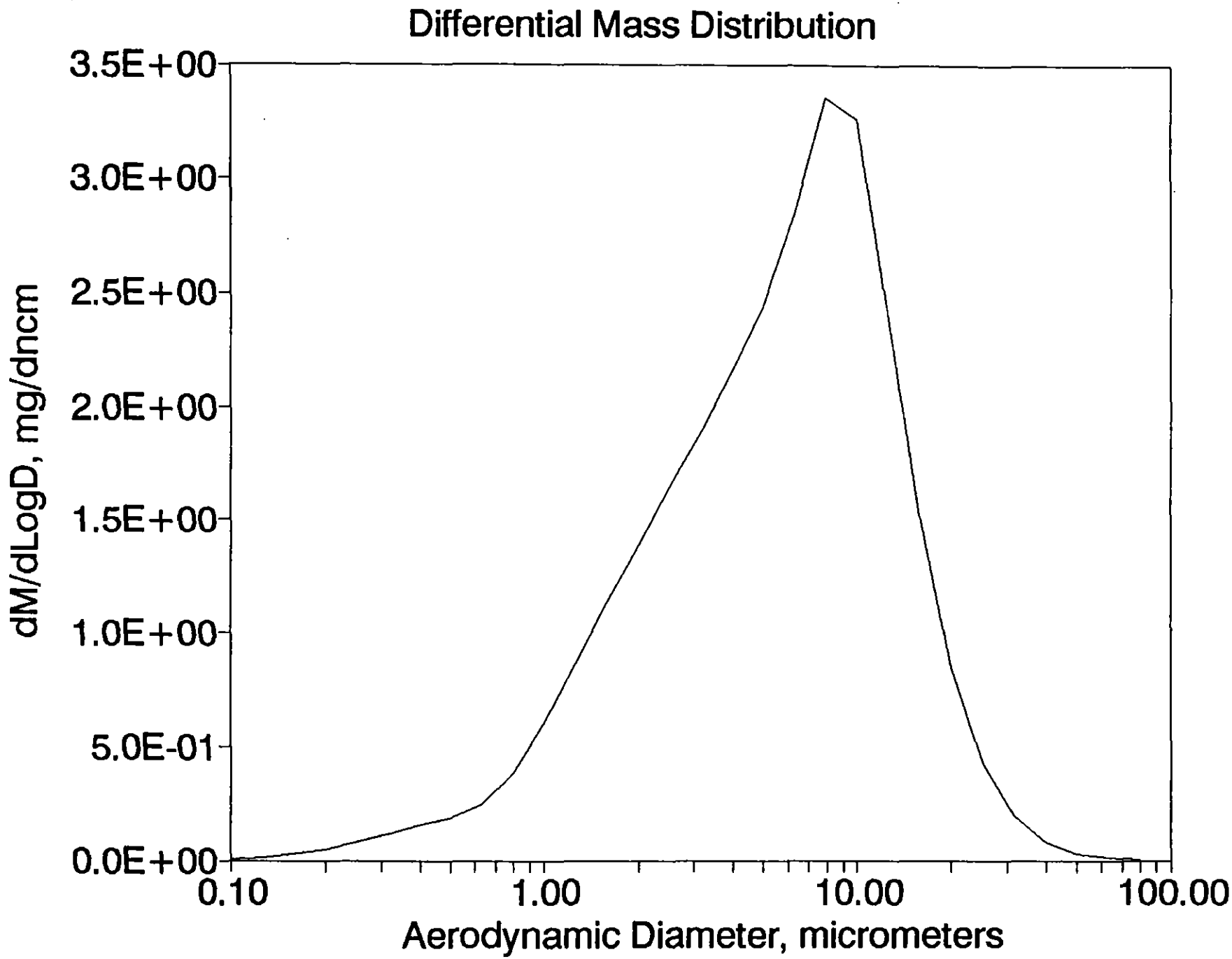

FIGURE 5-5
(TEST RUNS 2, 3 AND 4)

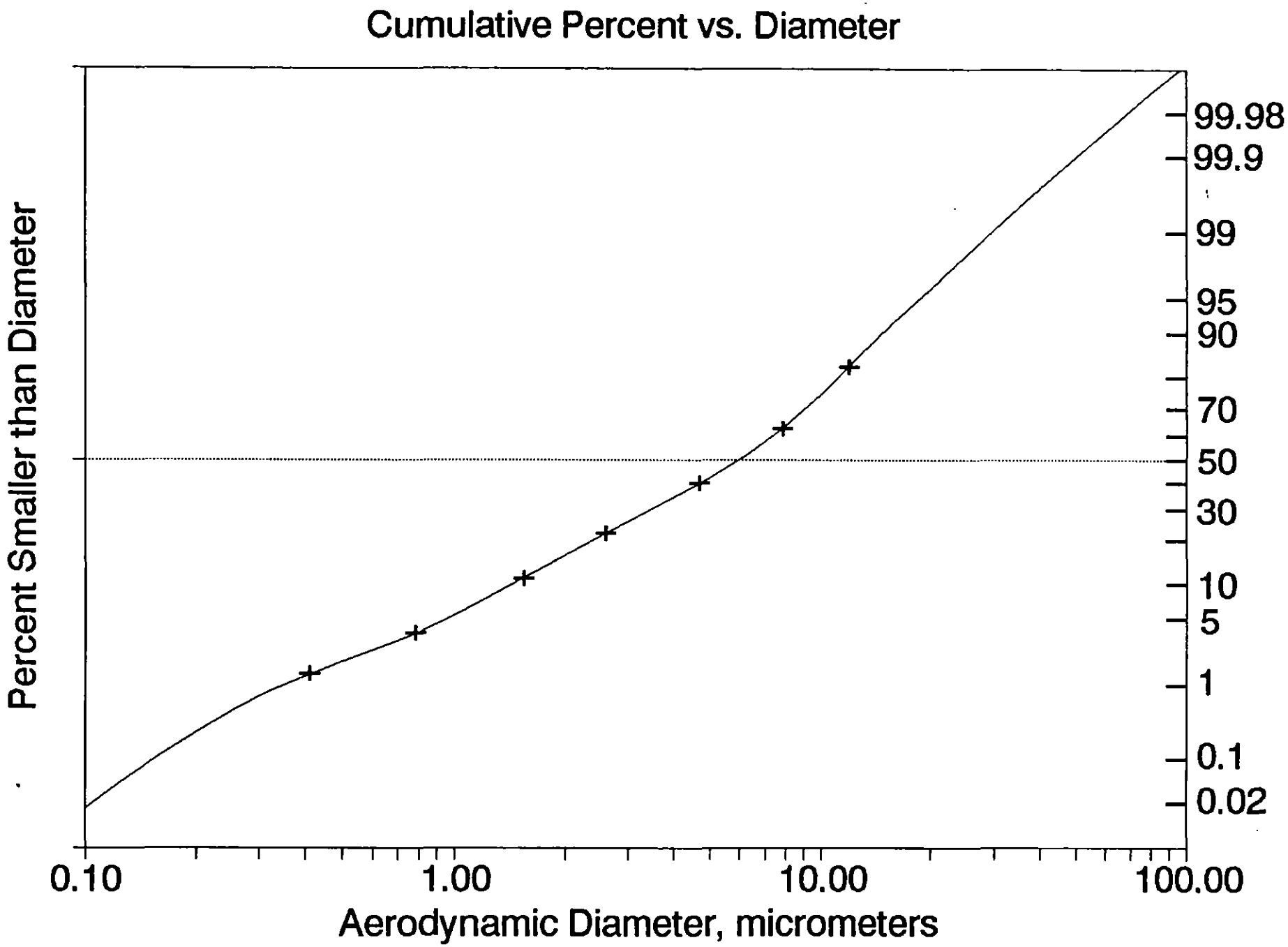

FIGURE 5-4
(TEST RUNS 2, 3 AND 4)

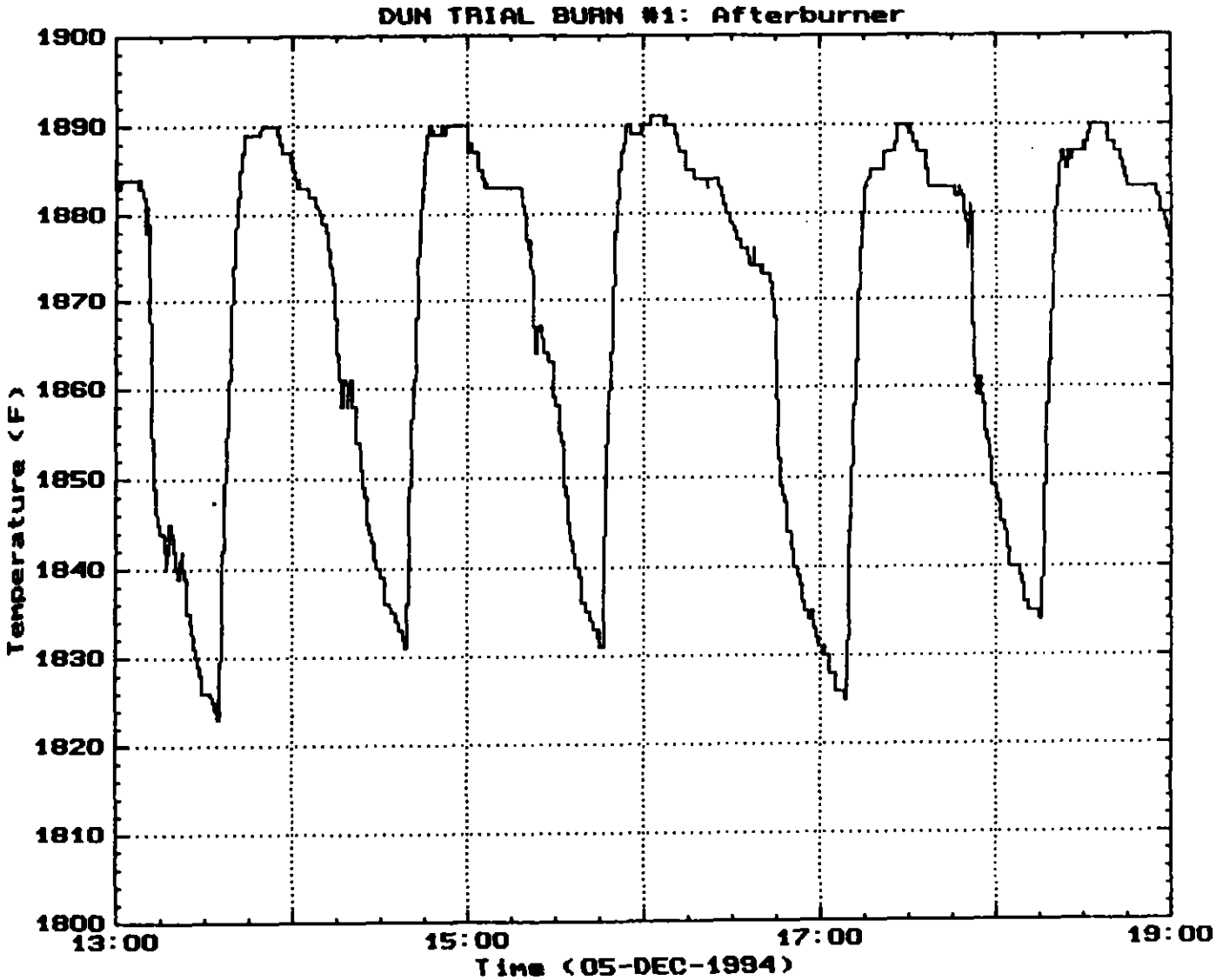

FT:07-TE-388 Exhaust Duct Temp.

FIGURE 5-3

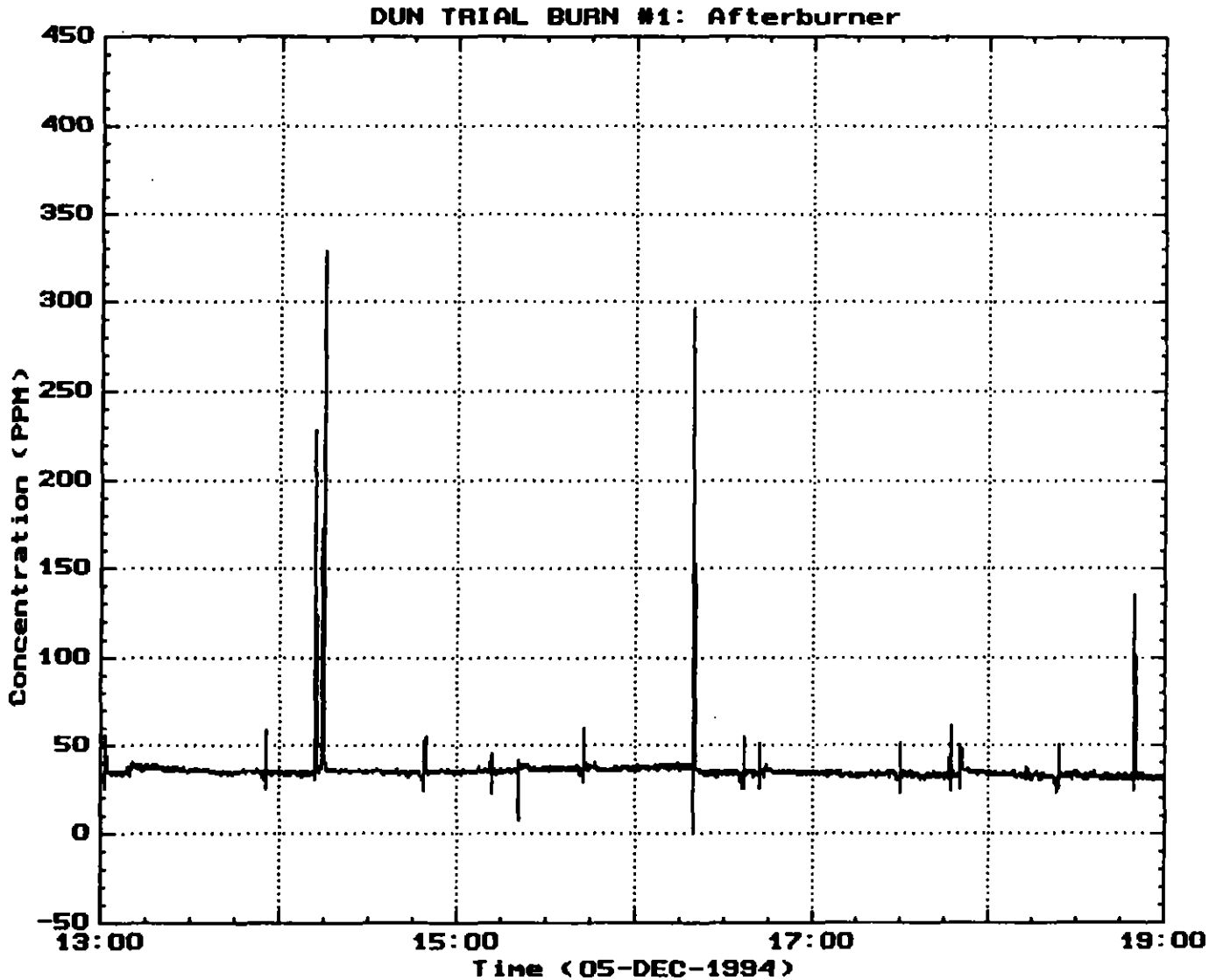

FT:07-AIT-201 CO (@ 7% O2)

FIGURE 5-2

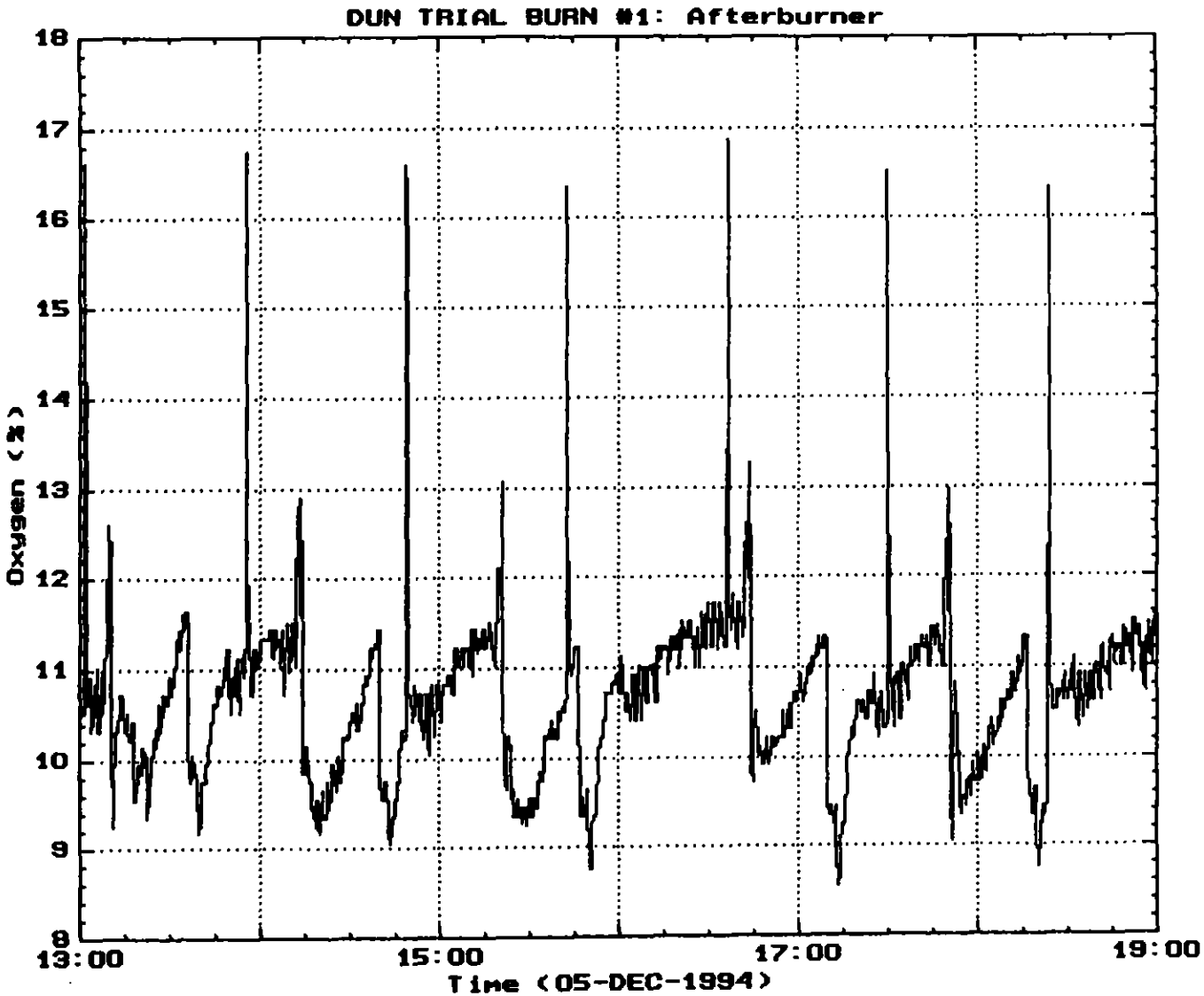

FT:07-AIT-40 Oxygen Concentration

FIGURE 5-1

6.0 QUALITY ASSURANCE AND QUALITY CONTROL

6.1 BACKGROUND

Assuring valid results in a sampling and analysis program of the type carried out here requires that a thorough quality assurance/quality control (QA/QC) program be followed. Such a QA/QC program was followed in all functions that pertained to the analyses performed in this program. Typical QA/QC methods are instrument and sampling-system calibrations, interruption of processing protocol, initial and continuing instrument-calibration verifications, sample preservation and identification, replicate samples and analyses, analysis of blank samples, matrix spikes, and surrogates (where appropriate), and maintaining chain-of-custody documentation for all samples. Details regarding the QA/QC programs implemented by each participant can be found in Appendix G (Southern Research Institute (SRI) Analytical Test Plan). Results of the QA/QC activities are provided in several other appendices and are summarized below.

As a routine QA/QC procedure, the laboratory analyzed both blank and spiked samples. The blank samples included method blanks (laboratory reagents), field blanks, and trip blanks. Blanks were prepared according to the appropriate methods and procedures. An extraction blank was prepared for each day of extractions. A blank was analyzed each day after the daily calibration check and before the analysis of samples for volatile organics. The spiked samples consisting of matrix spikes and matrix spike duplicates were analyzed according to Environmental Protection Agency (EPA)-certified methods appropriate for the specific analytes that were determined and quantified in this work. The blank samples were used to detect any contamination that may have been introduced in the field or the laboratory and to establish background values that could be used to adjust or correct routine analytical results.

Matrix-spiked and duplicate matrix-spiked samples were also prepared by the applicable methods. Each process sample matrix (water, quench liquid and fuel oil) had associated with it a matrix spike and a matrix spike duplicate that was prepared from one of the sets of samples. The matrix spikes were used to check the performance and the recovery efficiencies of the various analytical methods used in this work. The matrix spike and matrix spike duplicate analyses were performed in connection with the determinations of volatile organics, semivolatile organics, Polychlorinated dibenzo-p-dioxins/Polychlorinated dibenzo furans (PCDD/Fs), and metals. Also, internal standards and surrogate standards were used in all organics analyses. Moreover, the reagents used to prepare the Method 5 Acid Train (M5AT) were spiked with chloride at three levels to measure recovery. The Modified Method 5s (MM5s) were spiked with one dioxin and two other chlorinated compounds prior to sampling to monitor train retention. In addition, blank MM5s, M5ATs, and Multiple Metals Trains (MMTs) were opened to ambient air, assembled, and then disassembled. After rinsing these trains and collecting the rinses, all extracts and components (filter, sorbent, etc.) were sent to the laboratory for analysis. The resulting information was used to identify contamination associated with the recovery operation. The blank data were reported with the sample sheets; spikes and duplicates were as indicated below. The appendices covering each type of sample relate which blanks and standards were analyzed with each sample.

The precision of the analyses was measured by preparing and analyzing several kinds of spikes and duplicates for all sample types. The surrogates and analytes used for spiking were chosen from among those that were suggested in the SW-846 methods. For each method and matrix, the difference between the two duplicate analyses (matrix spike and matrix spike duplicate) results was used to estimate the precision of the analysis, and the average spike recovery was used to estimate the bias of the analysis. The surrogate spikes, which were authentic standards that were added to every sample prior to sample processing and analysis, were used to provide QC on every sample by constantly monitoring for unusual matrix effects and gross sample-processing errors. The surrogate standards were compounds that were not likely to be found in the matrix.

Volatile organic analysis (VOA) and volatile organic sampling train (VOST) samples were shipped to SRI so that the analyses of the samples could be completed within two weeks of sample collection. Other samples were shipped as rapidly as Department of Transportation (DOT) regulations allowed and were analyzed promptly. Samples that required refrigeration were shipped in ice chests and packed with ice packs to maintain a temperature of 4°C. Any exceptions to this practice are noted in the following sections in which specific analyses are discussed.

Chain of custody procedure was modified on Johnston Island to facilitate the movement of samples to SRI in Birmingham, AL and METCO in Addison, TX. Chain of custody seals were intact on the samples received at SRI.

6.2 SEMIVOLATILE ORGANIC ANALYSIS

The stack-gas QA/QC samples included a field blank that consisted of an entire MM5 train; trip blanks that consisted of a filter, an XAD-2 sorbent trap, and all reagents required for the train assembly; and a laboratory blank for each matrix and for each day that samples were prepared.

The XAD-2 sorbent was cleaned with methylene chloride according to SW-846 Method 0010. After the extraction, the methylene chloride was analyzed by gas chromatograph/mass spectrometry (GC/MS) to verify that the sorbent was contaminant-free prior to preparing the sorbent cartridges.

Before being shipped to the field, the XAD-2 sorbent traps were spiked with 114 μg of 2,4-dichlorophenol-d_3, 205 μg of 1,2,4-trichlorobenzene-d_3, and 2 ng of 2,3,7,8-tetrachlorodibenzo-p-dioxin-$^{37}Cl_4$. These spikes were used to indicate the recovery of chlorinated acids, neutrals, and dioxins from the sample trains.

The requirement to analyze process water and quench liquid samples was not part of SRI's original scope of work. The decision to analyze process water and quench liquid samples for semivolatile organic compounds was made on 19 Dec 94. The seven-day holding time for extraction had passed. The process liquid samples analyzed for semivolatiles were kept at ambient temperature during transportation to SRI.

Additionally, it should be noted that the sample identity numbers assigned to the process water and quench liquid samples follow the form DUNO-MT-000. These samples were originally collected for metals analysis and when it was determined that semivolatile analyses would also be required on these samples, aliquots were withdrawn from the metals samples.

In the case of fuel oils, the aliquots for semivolatile analysis were withdrawn from the samples originally collected for volatile analysis. These samples had been assigned identify numbers following the DUNO-VO-000 form.

The recoveries for the MM5 semivolatile field spikes are given in Table 6-1. The trip blank and field blank samples exhibited a good recovery for both surrogates. Recoveries of the second surrogate from samples for Test Runs 1, 2 and 3 were very low or not detected. The extraction surrogates for these samples were generally acceptable indicating a probable loss of compound during sampling or transit. All other recoveries ranged from 53% to 95% for the field spikes.

Recoveries of the spikes used to quantitate extraction efficiencies for semivolatile compounds from the MM5 trains are indicated on the data sheets in Appendix J, along with similar information for process liquids and ash samples. Fuel oil samples were diluted as required to allow analysis on instrument. Surrogates were spiked in the diluted fuel oil samples.

Most extraction surrogate recoveries were within acceptable limits. However, several samples yielded low recoveries of one or more surrogates. Low recoveries of the acid surrogates in the quench liquid samples may be low due to the low pH of the samples. Although the pH of the sample was adjusted with 50% (by wt.) caustic solution prior to acid extraction, a pH in the range of 8 to 10 may have caused retention of the acidic compounds in the aqueous phase. The most volatile acid surrogate (2-fluorophenol) yielded very low recoveries in several of the MM5 train samples and the baghouse ash samples. This surrogate may have been lost by volatilization from the sample.

Matrix spike and matrix spike duplicate results for the ash, process liquids, and fuel oil samples are also listed in Appendix J. Recoveries were also low for the acid matrix spikes in the quench liquid samples.

Table 6-2 shows the concentrations of semivolatile compounds found in the blanks prepared at the analytical laboratory. Table 6-3 indicates levels of target compounds found in the trip and field blanks for the MM5. No target compounds were detected in any of these blanks.

A portion of the sample extract for the baghouse ash composite sample (DUN4-SVO-936,937,938) was lost when the sample created a strong reaction during the concentration step. Therefore, the analysis was done on the unspiked sample, matrix spike and matrix spike duplicate. The results of these analyses indicate that no target compounds were present in the ash.

6.3 VOLATILE ORGANIC ANALYSIS

The QC samples for the volatiles analyses included blanks (each 12 hour shift), surrogates (each sample), and matrix spike/matrix spike duplicates (each matrix except VOST).

The VOST tubes were conditioned for a minimum of 16 hours at 180°C under a flow of pre-purified nitrogen prior to being sent to the field. Two sets of tubes from each batch were then analyzed to confirm that no interfering compounds were present. The tubes were then sealed and stored at 4°C or below, until used.

Internal standards and surrogates were added to all samples immediately prior to analysis by GC/MS. The volatile internal standards included the following, added at 0.25 μg to VOST tubes, and at 50 μg/L to condensates, and aqueous process samples:

Bromochloromethane
1,4-Difluorobenzene
Chlorobenzene-d_5

Volatile surrogates were added to all samples prior to analysis at a level of 0.25 μg. These compounds included the following:

Toluene-d_8
1,2-Dichloroethane-d_4
4-Bromofluorobenzene

The acceptable range of recoveries for the surrogates was assumed to be 50%-150%. Actual recoveries for surrogates from ash, aqueous process samples and condensates were as follows:

1,2-Dichloroethane-d_4	87% - 102%
Toluene-d_8	81% - 101%
4-Bromofluorobenzene	34% - 107%

The 34% recovery for 4-bromofluorobenzene was observed in DUN4-VO-292, the tenax tube for pair 3 run 4. Recovery of 4-bromofluorobenzene was greater than 50% in all other cases.

The surrogate recoveries for each sample are given in Appendix I.

VOST Audit samples were not received for this trial burn.

Matrix spike and matrix spike duplicate results for ash, process samples and fuel oil are given in Tables 6-4 through 6-8. All recoveries were within acceptable limits. The precision as determined by the relative differences of the matrix spike and matrix spike duplicates agreed to within 15% for all materials.

6.4 METALS ANALYSIS

Quality control data for metals analysis included analyte recoveries, train performance, sample tracking and custody documentation. The most significant difficulty encountered during the analysis of samples for metals was the failure of the mercury analyzer. In order to meet holding times for the exhaust gas samples, mercury analyses were subcontracted to a second laboratory.

As a QC protocol, the laboratory analyzed blank, duplicate, and spiked samples of each matrix. To determine matrix effects on the metal analyses, the process samples were spiked with each of the eighteen metals analyzed. Target limits for metal recoveries were 70-130%.

The metals spiking results for the process samples are given in Tables 6-9 through 6-11. The MMT QC analyses are reported in Tables 6-12 and 6-13. The metals QC data for the acid train is given in Table 6-14. Matrix spike data for baghouse ash and furnace ash samples are presented in Tables 6-15 and 6-16.

The front portions of Metals Trains for Runs 1 and 2 were consumed in order to meet Mercury holding times. These fractions were replaced by front portions for Runs 1 and 2 from Method 5 Acid Train. Mercury QC analysis is shown in Table 6-17.

Metal matrix spikes and duplicate analyses were within acceptable limits for most sample matrices. Exceptions and possible explanations for poor recoveries are addressed for each sample matrix below.

Spike recoveries for process water QC samples were very good for 16 of the 18 metals analyzed with relative percent differences from 0 to 17%. Silver and tin recoveries were low due to the formation of insoluble chlorides.

The laboratory experienced few problems with the analysis of quench liquid digestates analyzed by ICP.

Quench liquid spike recoveries were within the target range with good precision for each element analyzed except silver. The low silver recovery for the matrix spike duplicates indicates possible formation of insoluble silver chloride.

Matrix spike and duplicate analysis for fuel oil samples produced acceptable recoveries with good precision for most metals. Low silver and tin spike recoveries are attributable to formation of insoluble salts during digestion of the samples. Recoveries for thallium are low but consistent. Low thallium recovery values are the result of background interference observed in the unspiked sample. The background interference made recovery appear falsely low. Silver in fuel oil, as in previously discussed matrices, also gave poor reproducibility.

QC analysis for MMT samples involved spiking mock sample solution with each of the metals determined before preparation and analysis. MMT front half QC analysis produced excellent recoveries with good precision for all elements except silver and tin. Silver recoveries are low due to the formation of insoluble silver chloride. The low tin recoveries may also result from the formation of an insoluble salt during sample digestion.

Matrix spike and duplicate analysis of the baghouse ash and bottom ash produced variable recoveries for most of the metals analyzed. Silver recoveries were low due to the formation of insoluble silver chloride. The concentration of barium, chromium, manganese and zinc in the sample were too high for meaningful spike recovery. High spike recoveries indicate a high bias for antimony. Selenium and thallium recoveries were low. Antimony recovery was high due to unresolvable spectral interferences at the wavelengths used for analysis. Nickel recovery did not exhibit good precision.

In general, it should be noted that the baghouse and furnace ash samples were not homogeneous. The baghouse ash had what appeared to be scale in it. The furnace ash had bits of metal in it. This situation could have contributed to the poor precision and accuracy for several of the metals (i.e., chrome, nickel, zinc, and manganese).

High antimony recoveries appeared to be the result of spectral interferences at the wavelengths used for this analysis. When this problem was first encountered at 206 nanometres, the use of other wavelengths for nickel was investigated. This approach did not yield improved recoveries. It appears that iron can present a spectral interference across the most sensitive wavelengths available for antimony.

Nickel recoveries for the matrix spikes did not exhibit good precision, in addition to the contribution to the result of the non-homogenous nature of the samples described previously. This may have been due to variability in the spikes themselves since the unspiked sample results showed better precision than the matrix spikes.

6.5 HCl AND HF ANALYSIS

Blind M5AT field matrix spike samples were run using chlorides for quality control. The results are shown on Table 6-18. The recovery of chlorides ranged from 96% to 123% indicating confidence in the results.

6.6 DIOXIN

Before being shipped to the field, the XAD-2 sorbent traps were spiked with 2 ng of $^{37}Cl_4$-2,3,7,8-tetrachlorodibenzo-p-dioxin. These spikes were used to indicate the recovery of dioxins from the sample trains. This same compound was used as a cleanup standard for the non MM5 samples.

The PCDD/Fs analysis used several cleanup steps, and labeled standards were used to measure recoveries in ash, quench liquid, process water and fuel oil. An aliquot of $^{37}Cl_4$-2,3,7,8-TCDD as a cleanup-recovery standard was added to the dioxin fraction after extraction but prior to PCDD/Fs cleanup except for MM5 samples. Immediately before the analysis step, the labeled internal standards were added. The quantification of PCDD/Fs was based on the isotopically labelled standards spiked prior to extraction and the recovery of the compounds was estimated using the internal standards.

The recoveries of $^{37}Cl_4$-2,3,7,8-TCDD (i.e., the field spike-recovery standard for MM5 samples are given in Table 6-19. Generally, good recoveries were obtained for this compound, which had been spiked onto the XAD-2 resin in the MM5 tubes. Good recoveries for this compound were also observed when it was spiked into non-MM5 samples prior to cleanup.

The results for the matrix spike for each process sample are given in Tables 6-20 through 6-22 and in Appendix H. Table 6-23 shows the PCDD/Fs results for matrix spike and matrix spike duplicate for ash samples. The recovery of each component was good, and the relative difference between the matrix spike and matrix spike duplicate for each compound was generally less than 20%, which was considered good.

6.7 QA/QC SUMMARY

The results of the QA/QC samples indicate that sample collection and analysis were performed in adherence to method criteria. Spike recoveries were adequate in most cases.

A continuous emission monitor (CEM) audit was conducted prior to the start of the test runs.

All outputs from the instruments were reviewed for errors in data interpretation or instrument malfunction by the analyst. The analyst supervisor (usually a Section Head or Division Head) audited the computation steps and verified the calculations. The final transfer of data from the notebooks to the final report were checked by a Senior Scientist responsible for compiling the analytical report.

TABLE 6-1

RECOVERIES OF MM5 FIELD SPIKES

		Surrogate 1			Surrogate 2		
Sample Description	Sample No.	μg Spiked	μg Found	% Recovery	μg Spiked	μg Found	% Recovery
Trip Blank		101	77.0	76.3	206	195	94.8
Field Blank Resin		101	92.8	91.9	206	154	74.8
Run 1 Train Resin		101	86.6	85.8	206	4.73	2.3
Run 2 Train Resin		101	78.6	77.8	206	ND[a]	0
Run 3 Train Resin		101	54.4	53.9	206	ND	0
Run 4 Train Resin		101	71.3	70.6	206	171	83.1

Surrogate 1 = 2,4-Dichlorophenol-d^3
Surrogate 2 = 1,2,4-Trichlorobenzene-d^3

[a]ND = None Detected

TABLE 6-2

SEMIVOLATILE RESULTS SUMMARY
LABORATORY BLANKS

Blank ID	Run No.	Matrices	Compound	Concentration, μg/L
Lab Blank	HO4049	(MM5 Train TR 1, 2 & 3)	No Target Compounds Detected	
Lab Blank	HO4073	(MM5 Train TR4) (TR2: Brine & Scrubber) (TR3: Brine & Scrubber)	No Target Compounds Detected	
Lab Blank	HO4082	(Ash Samples)	No Target Compounds Detected	
Lab Blank	HO4090	(Quench Liquid + Process Water)	No Target Compounds Detected	
Lab Blank	HO4122	(Fuel Oils)	No Target Compounds Detected	

TABLE 6-3

SEMIVOLATILE QUALITY CONTROL ANALYSES

Sample Description	Run No.	Target Compound	Amount, μg
Field Blank Filter	HO4059	No Target Compounds Detected	
Field Blank Resin	HO4050	No Target Compounds Detected	
Trip Blank Resin	HO4076	No Target Compounds Detected	
Trip Blank Filter	HO4077	No Target Compounds Detected	
Blank Train Solvent Blank	HO4081	No Target Compounds Detected	
Run 1 Train Solvent Blank	HO4075	No Target Compounds Detected	

TABLE 6-4

FURNACE ASH VOA MATRIX SPIKE DATA
RUN 4 (DUN4-VO-390)

Target Compound Spike[a]	MATRIX SPIKE		MATRIX SPIKE DUPLICATE		Relative Percent Difference
	(μg/g)	(% Rec.)	(μg/g)	(% Rec.)	
1,2-Dichloroethane	0.22	88	0.21	84	4.7
Benzene	0.24	96	0.24	96	0
Trichloroethene	0.23	92	0.23	92	0
Toluene	0.24	96	0.24	96	0
Chlorobenzene	0.23	92	0.23	92	0

[a]Matrix Spike (MS) and Matrix Spike Duplicates (MSD) were each spiked at 0.25 μg/g.

TABLE 6-5

BAGHOUSE ASH VOA MATRIX SPIKE DATA
RUN 4 (DUN4-VO-396)

Target Compound Spike[a]	MATRIX SPIKE		MATRIX SPIKE DUPLICATE		Relative Percent Difference
	(μg/g)	(% Rec.)	(μg/g)	(% Rec.)	
1,2-Dichloroethane	0.44	88	0.48	96	8.7
Benzene	0.45	90	0.49	98	8.5
Trichloroethene	0.47	94	0.47	94	0
Toluene	0.48	0.24	0.50	100	4.1
Chlorobenzene	0.44	88	0.47	94	6.6

[a]Amount of Spike was 0.5 μg/g for Matrix Spike (MS) and Matrix Spike Duplicate (MSD)

TABLE 6-6

QUENCH LIQUID VOA MATRIX SPIKE DATA
RUN 4 POST TEST RUN (DUN4-VO-963)

Target Compound Spike[a]	MATRIX SPIKE		MATRIX SPIKE DUPLICATE		Relative Percent Difference
	(μg/L)	(% Rec.)	(μg/L)	(% Rec.)	
1,2-Dichloroethane	47.0	94	46.2	92	1.7
Benzene	48.6	97	49.5	99	1.8
Trichloroethene	49.2	98	48.4	96	1.7
Toluene	50.7	101	50.9	102	0.4
Chlorobenzene	46.9	93	45.8	91	2.4

[a]Matrix Spike (MS) and Matrix Spike Duplicate (MSD) were each spiked at 50 μg/L

TABLE 6-7

PROCESS WATER VOA MATRIX SPIKE DATA
RUN 4 PRETEST (DUN4-VO-956)

Target Compound Spike[a]	MATRIX SPIKE		MATRIX SPIKE DUPLICATE		Relative Percent Difference
	(μg/L)	(% Rec.)	(μg/L)	(% Rec.)	
1,2-Dichloroethane	43.4	97	45.8	92	5.1
Benzene	47.5	99	54.7	109	14.2
Trichloroethene	48.8	98	49.5	99	1.4
Toluene	50.8	102	50.5	101	0.6
Chlorobenzene	45.2	90	47.6	95	5.2

[a]Amount of Spike was 50 μg/L (each compound)

TABLE 6-8

FUEL OIL SAMPLES VOA MATRIX SPIKE DATA
RUN 4 PRETEST (DUN4-VO-319)

Target Compound Spike[a]	MATRIX SPIKE		MATRIX SPIKE DUPLICATE		Relative Percent Difference
	(μg/mg)	(% Rec.)	(μg/mg)	(% Rec.)	
1,2-Dichloroethane	12.1	97	12.0	96	0.8
Benzene	11.1	89	11.3	90	1.8
Trichloroethene	11.8	94	11.5	92	2.6
Toluene	12.0	96	12.1	97	0.8
Chlorobenzene	11.2	90	11.2	90	0

[a]Spike amount for each compound was 12.5 μg/mg

TABLE 6-9

METALS QC TABLE PROCESS WATER POST TEST - TEST RUN 4
SAMPLE NO.: DUN4-MT-957
(All results in μg/mL)

Compound	Digestion Blank	Sample	Sample Duplicate	Spike Level	Matrix Spike Recovery		Matrix Spike Duplicate Recovery		Relative % Difference
					μg/mL	%	μg/mL	%	
Antimony	<0.050	<0.050	<0.050	1.00	1.00	100	0.990	99	1
Arsenic	<0.050	<0.050	<0.050	2.00	1.92	96	1.98	99	3
Barium	<0.020	<0.020	<0.020	1.00	0.963	96	0.958	96	0
Beryllium	<0.005	<0.005	<0.005	0.500	0.478	96	0.473	95	1
Cadmium	<0.005	<0.005	<0.005	0.500	0.524	105	0.511	102	3
Chromium	<0.010	<0.010	<0.010	0.500	0.477	95	0.561	112	16
Cobalt	<0.020	<0.020	<0.020	1.00	0.970	97	0.978	98	1
Copper	<0.020	<0.020	<0.020	1.00	0.992	99	0.984	98	1
Lead	<0.050	<0.050	<0.050	4.00	4.02	101	3.93	98	3
Manganese	<0.020	<0.020	<0.020	0.500	0.513	103	0.537	107	4
Nickel	<0.020	<0.020	<0.020	1.00	0.979	98	1.16	116	17
Selenium	<0.050	<0.050	<0.050	2.00	1.89	95	1.89	95	0
Silver[a]	<0.050	<0.050	<0.050	1.00	<0.050	--	<0.050	--	--
Tin[a]	<0.020	<0.020	<0.020	1.00	0.0942	9	0.0981	10	11
Thallium[b]	<0.010	<0.010	<0.010	0.100	0.0852	85	0.0858	86	1
Vanadium	<0.010	<0.010	<0.010	1.00	0.977	98	0.975	98	0
Zinc	<0.020	<0.020	<0.020	1.00	0.992	99	0.979	98	1

[a]Due to chloride ions in the samples, silver could not be recovered.
[b]Thallium was determined by graphite furnace AAS.

DUNGB6.W51 330

TABLE 6-10

METALS QC TABLE QUENCH LIQUID POST TEST - TEST RUN 2
SAMPLE NO.: DUN2-MT-162
(All results in μg/mL)

Compound	Digestion Blank	Sample	Sample Duplicate	Spike Level	Matrix Spike Recovery		Matrix Spike Duplicate Recovery		Relative % Difference
					μg/mL	%	μg/mL	%	
Antimony	<0.050	<0.050	<0.050	1.00	0.894	89	0.885	89	0
Arsenic	<0.050	<0.050	<0.050	2.00	1.98	99	1.90	95	4
Barium	<0.020	<0.020	<0.020	1.00	1.00	100	0.996	100	0
Beryllium	<0.005	<0.005	<0.005	0.500	0.489	98	0.472	94	4
Cadmium	<0.005	0.0110	0.0115	0.500	0.537	105	0.521	102	3
Chromium	<0.010	0.0153	0.0195	0.500	0.514	99	0.501	97	2
Cobalt	<0.020	0.0335	0.0350	1.00	1.02	102	0.993	99	3
Copper	<0.020	0.186	0.195	1.00	1.19	100	1.18	99	1
Lead	<0.050	<0.050	<0.050	4.00	3.96	99	3.94	99	0
Manganese	<0.020	2.61	2.73	0.500	3.25	116	3.21	108	7
Nickel	<0.020	0.766	0.806	1.00	1.77	98	1.80	101	3
Selenium	<0.050	<0.050	<0.050	2.00	1.84	92	1.91	96	4
Silver[a]	<0.050	<0.050	<0.050	1.00	<0.050	--	<0.050	--	--
Tin	<0.020	<0.020	<0.020	1.00	0.783	78	0.995	96	21
Thallium[b]	<0.010	<0.010	<0.010	0.100	0.126	126	0.132	132	5
Vanadium	<0.010	0.0155	0.0135	1.00	0.961	95	0.994	98	3
Zinc	<0.020	0.595	0.651	1.00	1.59	97	1.62	100	3

[a]Due to chloride ions in the samples, silver could not be recovered.
[b]Thallium was determined by graphite furnace AAS.

TABLE 6-11

METALS QC TABLE FUEL OIL PRE TEST - TEST RUN 3
SAMPLE NO.: DUN3-MT-236
(All results in μg/mL)

Compound	Digestion Blank	Sample	Sample Duplicate	Spike Level	Matrix Spike Recovery		Matrix Spike Duplicate Recovery		Relative % Difference
					μg/mL	%	μg/L	%	
Antimony	<0.050	<0.050	<0.050	1.00	1.05	105	0.984	98	7
Arsenic	<0.050	<0.050	<0.050	2.00	1.99	100	1.92	96	4
Barium	<0.020	<0.020	<0.020	1.00	1.07	107	0.991	99	8
Beryllium	<0.005	<0.005	<0.005	0.500	0.519	104	0.485	97	7
Cadmium	<0.005	<0.005	<0.005	0.500	0.569	114	0.528	106	7
Chromium	<0.010	<0.010	<0.010	0.500	0.535	107	0.498	100	7
Cobalt	<0.020	<0.020	<0.020	1.00	1.04	104	0.985	99	5
Copper	<0.020	<0.020	<0.020	1.00	1.06	106	0.981	98	8
Lead	<0.050	<0.050	<0.050	4.00	4.18	105	3.84	96	9
Manganese	<0.020	<0.020	<0.020	0.500	0.553	111	0.522	104	7
Nickel	<0.020	<0.020	<0.020	1.00	1.08	108	1.01	101	7
Selenium	<0.050	<0.050	<0.050	2.00	2.16	108	2.21	111	3
Silver[a]	<0.050	<0.050	<0.050	1.00	0.150	15	0.0868	9	50
Tin	<0.020	0.230	<0.020	1.00	0.321	30	0.279	26	14
Thallium[b]	<0.010	<0.010	<0.010	0.100	0.0644	64	0.0562	56	13
Vanadium	<0.010	<0.010	<0.010	1.00	1.08	108	0.996	100	8
Zinc	<0.020	<0.020	<0.020	1.00	1.05	105	0.966	97	8

[a]Due to chloride ions in the sample, silver could not be recovered.
[b]Thallium was determine by graphite furnace AAS; although observation of peaks made it evident that there was <0.010 μg/mL of thallium in the samples, background interferences made recoveries falsely low.

DUNGB6.W51 330

TABLE 6-12

MMT METALS ANALYSIS QC
FRONT HALF METHOD SPIKE
(All results in μg/mL)

Compound	Digestion Blank	Spike Level	Matrix Spike Recovery		Matrix Spike Duplicate Recovery		Relative % Difference
			μg/mL	%	μg/mL	%	
Antimony	<0.050	1.00	0.973	97	0.995	100	3
Arsenic	<0.050	2.00	1.98	99	2.02	101	2
Barium	<0.020	1.00	0.976	98	0.995	100	2
Beryllium	<0.005	0.500	0.467	93	0.490	98	5
Cadmium	<0.005	0.500	0.554	111	0.569	114	3
Chromium	<0.010	0.500	0.497	99	0.508	102	3
Cobalt	<0.020	1.00	0.988	99	1.01	101	2
Copper	<0.020	1.00	0.998	100	1.01	101	1
Lead	<0.050	4.00	4.17	104	4.26	107	3
Manganese	<0.020	0.500	0.512	102	0.523	105	3
Nickel	<0.020	1.00	1.02	102	1.04	104	2
Selenium	<0.050	2.00	1.96	98	1.98	99	1
Silver[a]	<0.050	1.00	<0.050	--	<0.050	--	--
Tin	<0.020	1.00	0.0322	3	0.0346	3	0
Thallium[b]	<0.010	0.100	0.107	107	0.110	110	3
Vanadium	<0.010	1.00	0.962	96	0.964	96	0
Zinc	<0.020	1.00	1.07	107	1.07	107	0

[a]Due to chloride ions in the sample, silver could not be recovered.
[b]Thallium was determined by graphite furnace AAS.

TABLE 6-13

MMT METALS ANALYSIS QC
BACK HALF METHOD SPIKE
(All results in μg/mL)

Compound	Method Blank	Spike Level	Matrix Spike Recovery		Matrix Spike Duplicate Recovery		Relative % Difference
			μg/mL	%	μg/mL	%	
Antimony	<0.050	1.00	0.899	90	0.902	90	0
Arsenic	<0.050	2.00	1.70	85	1.81	91	7
Barium	<0.020	1.00	0.927	93	0.943	94	1
Beryllium	<0.005	0.500	0.448	90	0.456	91	1
Cadmium	<0.005	0.500	0.497	99	0.505	101	2
Chromium	<0.010	0.500	0.461	92	0.473	95	3
Cobalt	<0.020	1.00	0.929	93	0.952	95	2
Copper	<0.020	1.00	0.969	97	0.979	98	1
Lead	<0.050	4.00	3.91	98	4.00	100	2
Manganese	<0.020	0.500	0.494	99	0.499	100	1
Nickel	<0.020	1.00	0.957	96	0.987	99	3
Selenium	<0.050	2.00	1.80	90	1.84	92	2
Silver[a]	<0.050	1.00	0.686	69	0.778	78	12
Tin	0.0425	1.00	0.0954	10	0.0717	7	35
Thallium[b]	<0.010	0.100	0.0839	84	0.0986	99	16
Vanadium	<0.010	1.00	0.954	95	0.975	98	3
Zinc	<0.020	1.00	0.957	96	0.982	98	2

[a]Due to chloride ions in the sample, silver could not be recovered.
[b]Thallium was determined by graphite furnace AAS.

DUNGB6.W51 330

TABLE 6-14

METALS ANALYSIS QC TABLE - FMMT (ACID TRAIN)
METHOD SPIKE ON MICROWAVE DIGESTION BLANK
(All results in μg/mL)

Compound	Digestion Blank	Spike Level	Matrix Spike	% Recovery
Antimony	<0.050	1.00	1.04	104
Arsenic	<0.050	2.00	2.05	106
Barium[a]	<0.020	1.00	0.0288	3
Beryllium	<0.005	0.500	0.492	98
Cadmium	<0.005	0.500	0.584	117
Chromium	<0.010	0.500	0.523	105
Cobalt	<0.020	1.00	1.05	105
Copper	<0.020	1.00	1.02	102
Lead	<0.050	4.00	2.90	73
Manganese	<0.020	0.500	0.541	108
Nickel	<0.020	1.00	1.05	105
Selenium	<0.050	2.00	1.96	98
Silver[b]	<0.050	1.00	0.0139	1
Tin	<0.020	1.00	0.0420	4
Thallium[c]	<0.010	0.100	0.0901	90
Vanadium	<0.010	1.00	0.998	100
Zinc	<0.020	1.00	1.05	105

[a]Due to the method required for microwave digestion, free fluorides reduce the barium present in solution.
[b]Due to counter ions in the sample, silver could not be recovered.
[c]Thallium was determined by graphite furnace AAS.

TABLE 6-15

BAGHOUSE ASH METALS ANALYSIS QC TABLE
SAMPLE NO.: DUN4-MT-939
(All results in μg/mL)

Compound	Digestion Blank	Sample	Sample Duplicate	Spike Level	Matrix Spike Recovery		Matrix Spike Duplicate Recovery		Relative % Difference
					μg/mL	%	μg/mL	%	
Antimony[a]	<0.050	0.123	0.458	1.00	4.51	422	4.23	394	7
Arsenic	<0.050	0.341	0.314	2.00	2.22	95	2.03	85	11
Barium	<0.020	0.437	0.431	1.00	1.42	99	1.42	99	0
Beryllium	<0.005	<0.005	<0.005	0.500	0.462	92	0.466	93	1
Cadmium	<0.005	0.609	0.610	0.500	1.13	104	1.15	108	4
Chromium[b]	<0.010	3.25	3.35	0.500	3.55	50	3.47	34	38
Cobalt	<0.020	0.412	0.407	1.00	1.39	98	1.37	96	1
Copper	<0.020	3.12	3.18	1.00	4.17	102	3.97	82	22
Lead	<0.050	12.1	12.1	4.00	16.2	103	16.1	100	3
Manganese[b]	<0.020	26.3	28.3	1.00	26.8	--	26.3	--	--
Nickel[b]	<0.020	5.57	5.74	1.00	6.58	92	6.39	73	23
Selenium	<0.050	2.46	2.49	2.00	2.48	--	2.18	--	--
Silver[c]	<0.050	0.285	0.253	1.00	0.486	22	0.489	22	0
Tin	0.0238	1.93	1.99	1.00	2.00	4	2.04	8	200
Thallium[d]	<0.010	<0.010	<0.010	0.100	0.0425	43	0.0457	46	7
Vanadium	<0.010	0.242	0.238	1.00	1.12	88	1.13	89	1
Zinc[d]	<0.020	99.7	104	1.00	98.5	--	99.7	--	--

[a]No antimony peaks in this sample type were completely resolvable due to interferences at acceptable wavelengths.
[b]Spike level was too low in comparison to the amount of analyte present.
[c]Due to chloride ions in the samples, silver could not be recovered.
[d]Thallium was determined by graphite furnace AAS; although observation of peaks made it evident that there was <0.010 μg/mL of thallium in the samples, background interferences made recoveries falsely low.

DUNGB6.W51 330

TABLE 6-16

FURNACE ASH METALS ANALYSIS QC TABLE
SAMPLE NO.: DUN4-MT-388
(All results in μg/mL)

Compound	Digestion Blank	Sample	Sample Duplicate	Spike Level	Matrix Spike Recovery		Matrix Spike Duplicate Recovery		Relative % Difference
					μg/mL	%	μg/mL	%	
Antimony[a]	<0.050	0.362	0.366	1.00	5.15	479	4.78	442	8
Arsenic	<0.050	0.355	0.347	2.00	2.22	93	2.14	89	4
Barium[b]	<0.020	15.1	14.5	1.00	15.4	60	15.3	50	18
Beryllium	<0.005	0.00636	0.00641	0.500	0.467	92	0.472	93	1
Cadmium	<0.005	0.0762	0.0792	0.500	0.574	99	0.540	92	7
Chromium[b]	<0.010	3.90	4.03	0.500	3.61	–	4.67	70	–
Cobalt	<0.020	0.197	0.214	1.00	1.13	92	1.14	93	1
Copper	<0.020	1.61	1.69	1.00	2.52	87	2.52	87	0
Lead	<0.050	0.338	0.349	4.00	4.10	94	4.33	100	6
Manganese[b]	<0.020	65.0	62.5	1.00	64.5	70	65.8	200	96
Nickel	<0.020	5.68	6.36	1.00	6.46	44	6.84	82	60
Selenium	<0.050	1.61	1.59	2.00	1.76	16	1.62	2	156
Silver[c]	<0.050	<0.050	0.050	1.00	0.156	16	0.174	17	6
Tin	0.0279	0.0989	0.159	1.00	0.961	83	0.510	38	74
Thallium[d]	<0.010	<0.010	<0.010	0.100	0.0249	25	0.0189	19	27
Vanadium	<0.010	0.337	0.344	1.00	1.31	97	1.29	95	2
Zinc[b]	<0.020	3.21	2.96	1.00	4.57	148	5.29	220	39

[a]No antimony peaks in this sample type were completely resolvable due to interferences at standard wavelengths.
[b]Spike level was too low in comparison with the amount of analyte present.
[c]Due to chloride ions in the samples, silver could not be recovered.
[d]Thallium was determined by graphite furnace AAS; although observation of peaks made it evident that there was <0.010 μg/mL of thallium in the samples, background interferences made recoveries falsely low.

DUNGB6.W51 330

TABLE 6-17

METALS QC ANALYSIS FOR MERCURY

Sample ID	Sample Type	Percent Recovery
DUN1-MT-101-102	Combined $KMnO_4$ Impingers and HCl Rinse	104
DUN3-MT-182-183	Combined $KMnO_4$ Impingers and HCl Rinse	90
DUN4-MT-941	Bottom Ash	96
DUN2-MT-156	Fuel Oil	99
DUN5-MT-1004[a]	METQC179	112

[a]This was a blind QC sample from SRI which was inadvertently spiked below the subcontractor's detection limit. The subcontractor spiked on top of SRI's spike and their recovery is reflected.

TABLE 6-18

ACID TRAIN QC[a]

Sample No.	Spike Added µg/mL	Conc. Found µg/mL	% Recovery
DUN4-Cl-943	248.7	247.55	100
DUN4-Cl-944	24.87	27.06	109
DUN4-Cl-945	2.49	2.43	98
DUN4-Cl-946	2.49	2.38	96
DUN4-Cl-947	24.87	30.49	123
DUN4-Cl-948	248.7	250.30	101

[a]All of the spikes added were chloride ions

TABLE 6-19

TARGET PCDD/Fs IN MM5 TRAINS QC ANALYSES

Sample No.	Sample Description	SRI Sample No.	Surrogate[a] Amount (ng)		Percent Recovery
			Spike	Recovered	
DUNB-SVO-366	Blank Train Solvent Blank	VO7690	0.800	0.732	91
--	SRI Train Ext. Blank 1	VO7576	0.800	0.745	93
DUN1-SVO-042	Run 1 Train Solvent Blank	VO7696	0.800	1.04	130
DUN1-SVO-043	Run 1 Train Field Blank	VO7589	2.00	1.62	81
DUN1-SVO-044	Run 1 Train Filter Blank	VO7682	0.800	0.777	97
--	SRI Train Ext. Blank 2	VO7586	0.800	0.710	89
DUN3-SVO-123	Run 2 Train Solvent Blank	VO7691	0.800	0.845	106
DUN3-SVO-204	Run 3 Train Solvent Blank	VO7714	0.800	1.03	129
DUN3-SVO-285	Run 4 Train Solvent Blank	VO7701	0.800	0.925	116
DUNB-SVO-352	Blank Train Front	VO7577	0.800	0.780	98
DUNB-SVO-314	Blank Train Back	VO7578	2.00	1.67	84
DUN1-SVO-028	Run 1 Train Front	VO7588	0.800	0.664	83
DUN1-SVO-040	Run 1 Train Back	VO7587	2.00	1.06	53
DUN2-SVO-109	Run 2 Train Front	VO7683	0.800	0.649	81
DUN2-SVO-121	Run 2 Train Back	VO7693	2.00	1.41	72
DUN3-SVO-190	Run 3 Train Front	VO7590	0.800	0.774	97
DUN3-SVO-202	Run 3 Train Back	VO7684	2.00	1.01	50
DUN4-SVO-271	Run 4 Train Front	VO7591	0.800	0.624	78
DUN4-SVO-283	Run 4 Train Back	VO7685	2.00	1.60	80

[a]The surrogate is $^{37}Cl_4$-2,3,7,8-tetrachlorodibenzo[1,4]dioxin.

TABLE 6-20

TOTAL PCDD/Fs IN PROCESS WATER QC ANALYSES

	Recoveries of Matrix Spikes	
	Test Run 3 Post Test DUN3-MT-974, 975	
	Matrix Spike (SRI V07760)	Matrix Spike Duplicate (SRI V07761)
TCDF	138%	151%
TCDD	129%	141%
PeCDF	92%	97%
PeCDD	128%	113%
HxCDF	104%	106%
HxCDD	111%	116%
HpCDF	106%	107%
HpCDD	119%	117%
OCDF	44%	56%
OCDD	111%	114%

TABLE 6-21

TOTAL PCDD/Fs IN QUENCH LIQUID QC SAMPLES

	Recoveries of Matrix Spikes	
	Test Run 3 Post Test DUN3-MT-983, 984	
	Matrix Spike (SRI V07747)	Matrix Spike Duplicate (SRI V07749)
TCDF	141%	150%
TCDD	142%	175%
PeCDF	108%	114%
PeCDD	124%	133%
HxCDF	127%	119%
HxCDD	125%	128%
HpCDF	121%	117%
HpCDD	124%	121%
OCDF	110%	115%
OCDD	119%	120%

TABLE 6-22

TOTAL PCDD/Fs IN FUEL OIL QC ANALYSES

	Recoveries of Matrix Spikes	
	Test Run 3 Post Test DUN3-VO-239	
	Matrix Spike (SRI VO7772)	Matrix Spike Duplicate (SRI VO7773)
TCDF	117%	122%
TCDD	137%	121%
PeCDF	105%	107%
PeCDD	109%	110%
HxCDF	114%	120%
HxCDD	108%	109%
HpCDF	110%	112%
HpCDD	110%	115%
OCDF	107%	106%
OCDD	107%	119%

TABLE 6-23

TOTAL PCDD/Fs IN ASH SAMPLES QC ANALYSES

	Recoveries of Matrix Spikes			
	Baghouse Ash DUN4-SVO-936, 937, 938		Furnace Ash DUN4-SVO-392, 393, 940	
	Matrix Spike (SRI V07706)	Matrix Spike Duplicate (SRI V07707)	Matrix Spike (SRI V07703)	Matrix Spike Duplicate (SRI V07705)
TCDF	131%	133%	119%	115%
TCDD	118%	133%	111%	123%
PeCDF	114%	113%	99%	93%
PeCDD	116%	109%	99%	110%
HxCDF	113%	114%	105%	116%
HxCDD	116%	115%	115%	122%
HpCDF	116%	106%	102%	108%
HpCDD	117%	123%	104%	119%
OCDF	95%	110%	91%	106%
OCDD	93%	74%	103%	114%

B091

with GB

RESULTS OF THE RCRA TRIAL BURN FOR THE LIQUID INCINERATOR AT THE JOHNSTON ATOLL CHEMICAL AGENT DISPOSAL SYSTEM

Prepared for

PROGRAM MANAGER FOR CHEMICAL DEMILITARIZATION
ENVIRONMENTAL AND MONITORING DIVISION

SRI-APC-91-190-6967-006-F-R4

Southern Research Institute

RESULTS OF THE RCRA TRIAL BURN WITH GB FEED FOR THE LIQUID INCINERATOR AT THE JOHNSTON ATOLL CHEMICAL AGENT DISPOSAL SYSTEM

Prepared for

PROGRAM MANAGER FOR
CHEMICAL DEMILITARIZATION
ENVIRONMENTAL AND MONITORING DIVISION

SOUTHERN RESEARCH INSTITUTE
2000 Ninth Avenue South
P.O. Box 55305
Birmingham, AL 35255-5305

June 17, 1991
SRI-APC-91-190-6967-006-F-R4

RESULTS OF THE RCRA TRIAL BURN WITH GB FEED FOR THE LIQUID INCINERATOR AT THE JOHNSTON ATOLL CHEMICAL AGENT DISPOSAL SYSTEM

Executive Summary

Under Congressional mandate, the Department of the Army must dispose of existing stocks of obsolete chemical warfare agent munitions. The first full-scale facility for accomplishing this task is the Johnston Atoll Chemical Agent Disposal System (JACADS). JACADS consists of four incineration systems: the Liquid Incinerator (LIC) for the disposal of liquid agents, the Deactivation Furnace System (DFS) for the disposal of energetic materials, the Metal Parts Furnace (MPF) for the decontamination of metal munitions and metal parts that have been in contact with chemical agents, and the Dunnage Incinerator (DUN) for the disposal of packing material and other dunnage associated with the munitions. JACADS eventually will be used to destroy chemical munitions and storage containers filled with nerve agents (GB and VX) and with sulfur mustard (H and HD).

As part of the initial performance evaluations of the JACADS facility (i.e., operations verification tests, or OVTs), Southern Research Institute (SRI), in concert with other subcontractors, coordinated and carried out sampling and sample analyses in conjunction with three incinerator runs that were performed in the LIC facility on December 5 and 6, 1990. The feed material employed in these burns was liquid agent GB, whose major component (isopropyl methylphosphonofluoridate) was thus considered to be the principal organic hazardous constituent (POHC). The purpose of this test was to show that the LIC could destroy GB efficiently while operating in an environmentally safe manner. This report summarizes the field activities, chemical analyses, and data analyses associated with these tests.

The specific objectives of this project were to:

1. Perform a RCRA (Resource Conservation and Recovery Act) Trial Burn for the LIC.

2. Measure RCRA-regulated particulates, gaseous, and vapor emissions.

3. Measure other chemical emissions of potential concern.

4. Collect mass- and energy-balance data.

During each trial burn, samples were collected at various locations within the process to allow the calculation of destruction and removal efficiency (DRE) and removal efficiency (RE) for the RCRA-regulated substances.

The samples collected from the exhaust streams were analyzed for both organic and inorganic products of incomplete combustion (PICs), including

volatile compounds, semivolatile compounds [such as polychlorinated dibenzo-(p)-dioxins and dibenzofurans (PCDD/F)], metals, particulates, and HCl. In addition, solid and liquid waste samples from the plant were analyzed to identify any hazardous components that were present.

Operations data on the JACADS LIC processes were obtained and used to compute heat and mass balances.

The regulated parameters for the JACADS plant included concentration and DRE for GB, particulate concentrations, HCl emissions, incinerator temperatures, and combustion efficiency. All parameters met RCRA requirements. Although low levels of volatile and semivolatile PICs were found in the stack emissions, the compounds that were detected were typical for this sample matrix when the incinerator is operating under normal conditions. Likewise, the low levels of organics that were found in the waste samples from the plant were also typical for these sample materials.

Target metals in the stack gases were either undetectable or were emitted at level of less than 0.003 pounds per hour. In addition, the analyses of waste samples from the LIC indicated that, except for lead in the Scrubber Brine from Run 1 and Run 2, no metals were present that would cause the waste to be classified as hazardous.

Furthermore, the heat- and material-balance calculations indicated that the LIC was operating according to specifications and that air infiltration or dilution was not extensive enough to have affected the trial burn results. Moreover, the results of the analyses of QA/QC samples (blanks, surrogate spikes, matrix spikes, and duplicates) indicated that the data obtained during this test were representative. Hence, similar tests may be carried out in the future to evaluate the effect of an increase in the production capacity of the LIC.

TABLE OF CONTENTS

		Page
	Executive Summary	ii
1.	INTRODUCTION	1
1.1	Purpose of the Test Program	1
1.2	Objectives of the Test Program	2
1.3	Scope of This Report	3
2.	SUMMARY OF DATA	4
2.1	RCRA Regulated Parameters	4
2.1.1	Steady State Operating Conditions	4
2.1.2	Destruction of Chemical Agent	4
2.2	Nonregulated Parameters	9
2.2.1	Products of Incomplete Combustion	11
2.2.2	Dioxin/Furan	11
2.2.3	Metals	12
2.3	QA/QC	12
2.4	Heat and Mass Balances	13
3.	TEST FACILITY DESCRIPTION	14
3.1	JACADS Description	14
3.2	LIC Description	14
3.3	Agent for RCRA Trial Burn	21
3.4	Sampling Locations	23
3.5	Facility Instrumentation	25
4.	TEST PROCEDURES	27
4.1	Preparation for Testing	27
4.2	Continuous Collection Methods	27
4.2.1	Continuous Emission Monitors	27
4.2.2	Chemical Agent Monitors	27
4.3	Manual Sample-Collection Methods	27
4.3.1	Modified Method Five	28
4.3.2	Volatile Organic Sampling Train (VOST)	28
4.3.3	Method Five Acid Train	28
4.3.4	Multiple Metals Train (MMT)	32
4.3.5	Orsat	32
4.3.6	Support Methods	32
4.4	Sample Collection Sequence	33
4.5	Sampling Contingency Plan	35
4.6	Analysis	38
4.6.1	Semivolatile Organic Analysis	38
4.6.2	Volatile Organic Analysis	40
4.6.3	Anions Analysis	41
4.6.4	Metals Analysis	41
4.6.5	pH	42
4.6.6	Particulates	42

(continued)

TABLE OF CONTENTS (continued)

		Page
5.	TEST RESULTS	43
5.1	Introduction	43
5.2	Process Data	43
5.2.1	Process Data Acquisition	43
5.2.2	Orsat	49
5.2.3	Chemical Agent	49
5.3	Test Occurences	51
5.3.1	First Trial Burn	51
5.3.2	Second Trial Burn	51
5.3.3	Third Trial Burn	51
5.3.4	Summary of Test Occurrences	52
5.4	Categories of Analytical Data	52
5.4.1	Results from the Determinations of Semivolatile Organics	52
5.4.2	Volatile Organic Results	69
5.4.3	Anion Analysis	79
5.4.4	Metals Analysis	85
5.4.5	pH Analysis	94
5.4.6	Particulate Measurements	96
5.5	Chemical Agent - Principal Organic Hazardous Constituent	96
5.5.1	Results	96
5.5.2	Destruction and Removal Efficiency	97
6.	QUALITY ASSURANCE AND QUALITY CONTROL	98
6.1	Background	98
6.2	Semivolatile Organic Analysis	99
6.3	Volatile Organic Analysis	114
6.4	Metals Analysis	115
6.5	HCl Analysis	115
6.6	QA/QC Summary	121
APPENDIX A	OPERATOR LOGS	A-1
APPENDIX B	PROCESS DATA	B-1
APPENDIX C	SAMPLING DATA	C-1

(continued)

TABLE OF CONTENTS (continued)

		Page
APPENDIX D	GC/MS SUMMARY SHEETS	D-1
APPENDIX E	CHAIN OF CUSTODY AND LOG SHEETS	E-1
APPENDIX F	SAMPLING METHOD DESCRIPTIONS	F-1
APPENDIX G	METCO REPORT	G-1
APPENDIX H	HEAT AND MASS BALANCE	H-1
APPENDIX I	HEAT AND MASS BALANCE PROGRAMS	I-1
APPENDIX J	TEST PLAN	J-1
APPENDIX K	CONTINUOUS EMISSIONS MONITOR DATA	K-1

LIST OF TABLES

Table		Page
1-1	REGULATORY LEVELS FOR METALS IN INCINERATOR PROCESS SAMPLES	3
2-1	SUMMARY OF RESULTS	5
2-2	METHOD 5 ACID TRAIN RESULTS	6
2-3	METHOD 5 MULTIPLE METALS TRAIN RESULTS	6
2-4	DETAILS OF MM5 SAMPLING	7
2-5	DETAILS OF VOST SAMPLING	7
2-6	CHEMICAL AGENT COLLECTION	8
2-7	SAMPLES WITH LEAD CONCENTRATIONS ABOVE REGULATORY LIMIT	9
2-8	SYSTEM PERFORMANCE FOR NONREGULATED PARAMETERS	10
3-1	LIC SAMPLING LOCATIONS	23
3-2	LOCATION OF SAMPLING POINTS METHOD 5 ACID TRAIN AND METHOD 5 MULTIPLE METALS TRAIN	24
3-3	LOCATION OF SAMPLING POINTS FOR MM-5 TRAIN	25
3-4	FACILITIES EMISSIONS MONITORING INSTRUMENTATION	26
4-1	SUMMARY OF SAMPLING AND ANALYSIS ACTIVITY	36
5-1	LIC PDAR DATA	44
5-2	PROCESS DATA FROM MANUAL STACK SAMPLING	45
5-3	INTREGATED ORSAT DATA	49
5-4	COMBUSTION EFFICIENCY RESULTS	50
5-5	DETAILS OF MM5 SAMPLING	53
5-6	PCDD/F DETERMINATION IN MM5 SAMPLES	54
5-7	MODIFIED METHOD 5 SEMIVOLATILE RESULTS SUMMARY	56

(continued)

LIST OF TABLES (continued)

Table		Page
5-8	PCDD/F DETERMINAITON Fuel Oil	59
5-9	PCDD/F DETERMINATION Caustic	60
5-10	PCDD/F DETERMINATION Scrubber Liquor	61
5-11	PCDD/F DETERMINATION Scrubber Brine	62
5-12	PCDD/F DETERMINATION Process Water	63
5-13	PCDD/F DETERMINATION Refractory Salt	64
5-14	SEMIVOLATILE RESULTS SUMMARY RUN 1	66
5-15	SEMIVOLATILE RESULTS SUMMARY RUN 2	67
5-16	SEMIVOLATILE RESULTS SUMMARY RUN 3	68
5-17	VOST VOLATILE ORGANICS RESULTS SUMMARY RUN 1	70
5-18	VOST VOLATILE ORGANICS RESULTS SUMMARY RUN 2	72
5-19	VOST VOLATILE ORGANICS RESULTS SUMMARY RUN 3	74
5-20	AQUEOUS VOLATILE ORGANIC SUMMARY	77
5-21	METHOD 5 ACID TRAIN RESULTS	79
5-22	METHOD 5 ACID TRAIN RESULTS	81
5-23	ANION CONCENTRATIONS	84
5-24	METHOD 5 MULTIPLE METALS TRAIN RESULTS	85
5-25	METHOD 5 METAL TRAIN RESULTS BLANK RUN	87
5-26	METHOD 5 METAL TRAIN RESULTS RUN 1	88
5-27	METHOD 5 METAL TRAIN RESULTS RUN 2	89
5-28	METHOD 5 METAL TRAIN RESULTS RUN 3	90
5-29	METAL ANALYSIS RESIDUE SAMPLES	92
5-30	SAMPLE pH	95

(continued)

LIST OF TABLES (continued)

Table		Page
6-1	MM5 FIELD SPIKES	101
6-2	SEMIVOLATILES QUALITY CONTROL SAMPLES FOR THE LIC RCRA TRIAL BURN	102
6-3	SEMIVOLATILES QUALITY CONTROL SAMPLES FOR THE LIC RCRA TRIAL BURN	103
6-4	SEMIVOLATILES QUALITY CONTROL SAMPLES FOR THE LIC RCRA TRIAL BURN	104
6-5	SEMIVOLATILES QUALITY CONTROL SAMPLES FOR THE LIC RCRA TRIAL BURN	105
6-6	SEMIVOLATILES QUALITY CONTROL SAMPLES FOR THE LIC RCRA TRIAL BURN	106
6-7	PCDD/F DETERMINATION EPA Audit Samples (RCRA-LIC)	107
6-8	SPIKED SAMPLE QUALITY CONTROL PERCENT RECOVERIES AND RELATIVE PERCENT DEVIATION (% RPD) OF PCDD/F COMPOUNDS Post Test Caustic (3J-2-055MS, 3J-2-056MSD) From Run 2 RCRA for LIC	108
6-9	SPIKED SAMPLE QUALITY CONTROL PERCENT RECOVERIES AND RELATIVE PERCENT DEVIATION (% RPD) OF PCDD/F COMPOUNDS Post Test Fuel Oil (3J-2-002MS, 3J-2-002MSD) From Run 2 RCRA for LIC	109
6-10	SPIKED SAMPLE QUALITY CONTROL PERCENT RECOVERIES AND RELATIVE PERCENT DEVIATION (% RPD) OF PCDD/F COMPOUNDS Post Test Scrubber Brine (3J-2-045MS, 3J-2-046MSD) From Run 2 RCRA for LIC	110
6-11	SPIKED SAMPLE QUALITY CONTROL PERCENT RECOVERIES AND RELATIVE PERCENT DEVIATION (% RPD) OF PCDD/F COMPOUNDS Post Test Process Water (3J-2-052MS, 3J-2-053MSD) From Run 2 RCRA for LIC	111
6-12	SPIKED SAMPLE QUALITY CONTROL PERCENT RECOVERIES AND RELATIVE PERCENT DEVIATION (% RPD) OF PCDD/F COMPOUNDS Post Test Scrubber Liquor (3J-2-047MS, 3J-2-048MSD) From Run 2 RCRA for LIC	112

(continued)

LIST OF TABLES (continued)

Table		Page
6-13	SPIKED SAMPLE QUALITY CONTROL PERCENT RECOVERIES AND RELATIVE PERCENT DEVIATION (% RPD) OF PCDD/F COMPOUNDS Post Test Refractory Salt (4K-2-055MS, 3J-2-055MSD) From Run 2 RCRA for LIC	113
6-14	TYPICAL VOST SURROGATE RECOVERIES	114
6-15	VOST AUDIT RESULTS FOR AUDIT CYLINDER 3AL-2015	115
6-16	VOLATILES QUALITY CONTROL SAMPLES FOR THE LIC RCRA TRIAL BURN	116
6-17	VOLATILES QUALITY CONTROL SAMPLES FOR THE LIC RCRA TRIAL BURN	117
6-18	VOLATILES QUALITY CONTROL SAMPLES FOR THE LIC RCRA TRIAL BURN	118
6-19	VOLATILES QUALITY CONTROL SAMPLES FOR THE LIC RCRA TRIAL BURN	119
6-20	METAL ANALYSIS MATRIX SPIKE RESULTS	120
6-21	CHLORIDE SPIKE RESULTS	121

LIST OF FIGURES

Figure		Page
3-1	LOCATION OF JOHNSTON ATOLL RELATIVE TO OTHER ISLANDS	15
3-2	MAP OF JOHNSTON ATOLL	16
3-3	JACADS SIMPLIFIED PROCESS FLOW DIAGRAM	17
3-4	SCHEMATIC DIAGRAM OF THE LIQUID INCINERATOR (LIC)	18
3-5	PROCESS DIAGRAM AND SAMPLING POINTS FOR POLLUTION ABATEMENT SYSTEM (PAS)	20
3-6	MPF, DFS, AND LIC STACK SAMPLE POINT LOCATIONS	22
4-1	EPA MODIFIED METHOD 5 TRAIN (MM5)	29
4-2	VOLATILE ORGANICS SAMPLING TRAIN (VOST)	30
4-3	METHOD 5 TRAIN	31
4-4	TIMING OF SAMPLING DURING A TYPICAL TRIAL BURN	34
5-1	LIC-1 FUEL FLOWS	46
5-2	LIC-2 FUEL FLOWS	47
5-3	LIC-3 FUEL FLOWS	48

LIST OF ACRONYMS

ACAMS	Automatic Chemical Agent Monitoring System
ASC	Allowable Stack Concentration
BTU	British Thermal Unit
CAMDS	Chemical Agent Munitions Disposal System
CEM	Continuous Emission Monitor
COC	Chain of Custody
DFS	Deactivation Furnace System
DNCM	Dry normal cubic meter (Standard temperature and pressure)
DRE	Destruction and Removal Efficiency
DSCF	Dry standard cubic foot
ECR	Explosion Containment Room
EPA	Environmental Protection Agency
GC/ECD	Gas Chromatography/Electron Capture Detection
GC/MS	Gas Chromatography/Mass Spectrometry
gph	gallons per hour
HDC	Heated discharge conveyer
HpCDD	Heptachlorodibenzodioxin
HpCDF	Heptachlorodibenzofuran
HRGC/HRMS	High Resolution Gas Chromatography/High Resolution Mass Spectrometry
HxCDD	Hexachlorodibenzodioxin
HxCDF	Hexachlorodibenzofuran
in. w.c.	inches water column
JACADS	Johnson Atoll Chemical Agent Disposal System
kscfh	thousands of standard cubic feet per hour
lb/cf	pounds per cubic foot
lb/hr	pounds per hour
LIC	Liquid Incinerator
μg/mL	Microgram per milliliter
MM5	Modified Method 5 Sampling Train
MMT	Multiple Metals Sampling Train
M5AT	Method 5 Acid Train
NDIR	Nondispersive Infrared
ng/m^3	Nanogram per cubic meter
OCDD	Octachlorodibenzodioxin
OVT	Operations Verification Tests
PAS	Pollution Abatement System
PCBs	Polychlorinated Biphenyls
PCDD/F	Polychlorinated Dibenzodioxins/furans
PDAR	Process Data Acquisition and Reporting
PeCDD	Pentachlorodibenzodioxin
PeCDF	Pentachlorodibenzofuran
PM Cml Demil	Program Manager for Chemical Demilitarization
POHC	Principle Organic Hazardous Constituents
ppb	Parts per billion
ppm	Parts per million
R&D	Research and Development

(continued)

LIST OF ACRONYMS (continued)

RCl	Total chlorinated hydrocarbons
RCRA	Resource Conservation and Recovery Act
RSM	Rocket Shear Machine
S/F Tubes	Shipping and Firing Tubes
SRI	Southern Research Institute
STEM	Sampling Train for Energetic Materials
SW-846	Test Methods for Evaluating Solid Waste
TCDD	Tetrachlorodibenzodioxin
TCDF	Tetrachlorodibenzofuran
TCLP	Toxicity Characteristic Leaching Procedure
TSCA	Toxic Substances Control Act
UE&C	United Engineers and Constructors
VOA	Volatile Organic Analytes or Analysis
VOST	Volatile Organic Sampling Train

RESULTS OF THE RCRA TRIAL BURN WITH GB FEED FOR THE LIQUID INCINERATOR AT THE JOHNSTON ATOLL CHEMICAL AGENT DISPOSAL SYSTEM

1. INTRODUCTION

1.1 *Purpose of the Test Program*

Under Congressional mandate, the Department of the Army must dispose of existing stocks of obsolete chemical warfare agent munitions. Accordingly, the Army intends to operate eight facilities throughout the country to dispose of chemical agents. Most of these agents are to be thermally destroyed in Liquid Agent Incinerators (LICs), the first of which constructed at Johnston Atoll is called the Johnston Atoll Chemical Agent Disposal System (JACADS). JACADS was constructed for the full-scale demilitarization of chemical munitions and storage containers and for the detoxification of nerve agents (GB and VX) and mustard agents (H and HD). Other combustion facilities at JACADS besides the LIC are a Deactivation Furnace System (DFS), a Dunnage Incinerator (DUN), and a Metals Parts Furnace (MPF).

The Army has scheduled the operations verification tests (OVTs) of the JACADS facility and is currently in the process of conducting them. The completion of the OVTs at Johnston Atoll is pivotal because, by Congressional Order, no chemical-agent disposal may be conducted at any Army facility except the one at Tooele Army Depot in Tooele, Utah, until the completion of the performance evaluation at Johnston Atoll. Congress enacted Public Law 100-456 on September 29, 1988, National Defense Authorization Act, FY 1989, establishing a deadline of December 31, 1990, to complete the OVT at Johnston Atoll. The deadline for eliminating the United States chemical agent stockpile is April 30, 1997.

In partial fulfillment of the OVT requirements, three trial burns were performed in the LIC at JACADS on December 5 and 6, 1990, with liquid agent GB as the feed material. These trial burns were conducted to demonstrate compliance with the Resource Conservation and Recovery Act (RCRA) during the destruction of GB in the LIC. This document is the report for the sampling and analysis of the LIC during the trial burns. The report has been prepared by Southern Research Institute (SRI) for the Program Manager for Chemical Demilitarization (PM Cml Demil). The work described here was carried out by SRI under subcontract to United Engineers and Constructors (UE&C) as a part of their prime contract (DACA87-86-C-0098) with PM Cml Demil.

Throughout these tests, the LIC was evaluated against RCRA-specified performance criteria. These system-performance criteria pertained to the destruction and removal efficiency (DRE) of the principal organic hazardous constituent (POHC), the emission from the exhaust stack of particulate matter, carbon monoxide and acid gas, the characteristics of the combustion residue, and the various parameters relating to furnace operation. The pertinent criteria may be summarized as follows:

- The DRE of GB must be 99.99% or greater, and GB concentration in the stack must be below 1 allowable stack concentration (ASC) (0.0003 mg/dncm).

- Particulate emissions from the exhaust stack must not exceed 180 mg/dncm (0.08 grains per dry standard cubic foot) when corrected for 7% oxygen content in the exhaust gas.

- Carbon monoxide concentration must be no greater than 100 ppm in the exhaust in order to meet the combustion efficiency requirement.

- The removal of HCl (hydrogen chloride, or hydrochloric acid) from the exhaust gas by the PAS must be 99.9% or greater, or the HCl emission rate must be less than 4 pounds per hour.

- At steady-state operating rates, Primary Chamber exhaust-gas temperatures in the range of 2550-2850 °F and Secondary Chamber exhaust-gas temperatures in the range from 1850 to 2150 °F must be maintained during trial-burn periods.

- The incinerator-process samples and residues (brine, liquor, caustic, process water, salts) must be subjected to the Toxicity Characteristic Leaching Procedure (TCLP). The resulting liquids must then be analyzed and found to contain concentrations of the metals listed in Table 1-1 that are below the regulatory limits indicated in the table. Otherwise, the corresponding process residues will be considered hazardous for disposal purposes. GB must be below 20 ppb.

1.2 Objectives of the Test Program

The objectives of this program were to meet the RCRA permit requirements as outlined above and to:

- Monitor the LIC exhaust-stack emissions for:
  - O_2 (oxygen)
  - CO_2 (carbon dioxide)
  - Volatile and semivolatile products of incomplete combustion (PICs)
  - Polychlorinated dibenzo-p-dioxins and dibenzofurans (PCDD/F)
  - Trace Metals

TABLE 1-1. REGULATORY LEVELS FOR METALS IN INCINERATOR RESIDUE LEACHATES

Metal name	Regulatory limits (μg/ml)
Arsenic	5.0
Barium	100.0
Cadmium	1.0
Chromium (total)	5.0
Lead	5.0
Mercury	0.2
Selenium	1.0
Silver	5.0

- Analyze the incinerator solid and liquid process samples for:
  - Volatile and semivolatile PICs
  - PCDD/F
  - F^- (Fluoride, soluble)
  - PO_4^{-3} (Phosphate, soluble)
  - pH
- Calculate heat and mass balances for the LIC based on operational data collected during the tests.

1.3 Scope of This Report

This report presents the test procedures and results for three GB trial burns (i.e., three test runs) in the LIC at JACADS, as well as the findings from the concomitant evaluation of the associated pollution abatement system (PAS).

The sampling team included three sampling coordinators from SRI and a seven-member sampling crew from METCO Environmental, Inc., Dallas, TX. The sample analyses for organics and inorganics were performed by SRI in SRI's corporate laboratories, except that PAS incinerator process liquids were analyzed for volatile organic analytes by RECRA Environmental, Inc., Amherst, NY. METCO performed the Orsat analyses. Observers were present from the Environmental Protection Agency (EPA), PM Cml Demil, Southwest Research Institute (SwRI), and UE&C.

2. SUMMARY OF DATA

2.1 RCRA-Regulated Parameters

A summary of LIC system performance relative to RCRA criteria is presented in Table 2-1. Four manual sampling trains were used to quantify stack-gas emissions. These were: an EPA Modified Method 5 (MM5) Train for sampling semivolatile organic compounds and PCDD/F; an EPA Method 5 acid train for sampling HCl and HF (hydrogen fluoride, or hydrofluoric acid); an EPA Method 5 Multiple Metals train (MMT) for sampling metals and particulate matter; and an EPA volatile organics sampling train (VOST) for collecting volatile organic compounds. Bulk gas compositions of O_2, CO, CO_2 were determined manually by Orsat analysis. In addition, continuous emission monitoring systems (CEMs) were used to provide data on O_2, CO. GB was monitored with ACAMS. Some of the operating conditions and results for the above sampling trains are presented in Tables 2-2 through 2-5. All sampling trains passed the required pretest and post-test leak checks.

2.1.1 Steady-State Operating Conditions

The average temperature of the Primary Chamber exhaust during each burn was 2700 °F (range = 2696 to 2712 °F). The average Secondary Chamber exhaust temperature was 2000 °F (range = 1992 to 2072). The GB feed rate was 750 pounds per hour throughout each sampling period.

2.1.2 Destruction of Chemical Agent

Stack emissions of GB were not detected during the LIC trial burns. The sensitivity (Limit of Quantitation) of the GB monitoring system (i.e., the Automatic Continuous Air Monitoring System or ACAMS) was an average of five times lower than the Allowable Stack Concentration (ASC) for GB (0.0003 mg/m^3). Based on this ability, the actual level of GB detectable was below 0.00006 mg/m^3. The application of stack height, wind speed, and temperature to an estimate of GB vapor concentration at this level would yield a dispersed concentration well below the Surgeon General's limit for general population exposure to agent GB (0.000003 mg/m^3).

TABLE 2-1. SUMMARY OF SYSTEM TEST CONDITIONS AND RESULTS

Parameter	Units	Burn LIC1	Burn LIC2	Burn LIC3	Requirement
GB Feed Rate	lb/hr	750	750	750	
GB Concentration	mg/m^3	<0.0003	<0.0003	<0.0003	<0.0003
Incinerator	°F				
Primary Exhaust		2701	2701	2699	2700 ± 150
Secondary Exhaust		2001	2000	1998	2000 ± 150
Combustion Efficiency	%	99.96	99.94	99.96	≥99.9
DRE - GB	%	>99.999998	>99.999998	>99.999998	≥99.99
Particulate Matter corrected to 7% O_2	mg/m^3	3.7	4.2	3.9	<180
HCl Emissions	lb/hr	≤0.0023	≤0.035	≤0.013	<4
Stack Dry Gas Flow	lb/hr	31500	30800	29100	
Oxygen[a]	%	14.6	14.4	14.6	
Carbon Dioxide[a]	%	4.5	4.6	4.5	
Carbon Monixide corrected to 7%, O_2	ppm	19	26	18	<100

[a]Orsat values.

TABLE 2-2. METHOD 5 ACID TRAIN CONDITIONS AND RESULTS

Parameter	Units	Run 1	Run 2	Run 3
Date	--	12/5/90	12/6/90	12/6/90
Sample Time	minutes	120	120	120
Sample Volume	dscf	93.29	63.30	56.90
Stack Gas Flow Rate	dscf/hr	413000	414000	375000
Stack Gas Temperature	°F	197	196	197
Stack Gas Moisture	%	38.6	38.4	38.2
Percent Isokinetic		103.2	99.2	98.4
HCl Catch	mg	0.234	2.43	0.891
HCl Emission Rate	lb/hr	0.0023	0.035	0.013

TABLE 2-3. METHOD 5 MULTIPLE METALS TRAIN CONDITIONS AND RESULTS

Parameter	Units	Run 1	Run 2	Run 3
Date	--	12/5/90	12/6/90	12/6/90
Sample Time	minutes	72	72	72
Sample Volume	dscf	55.42	53.60	55.14
Stack Gas Flow Rate	dscf/hr	418000	396000	392000
Stack Gas Temperature	°F	198	196	198
Stack Gas Moisture	%	37.8	38.5	38.4
Percent Isokinetic		100.9	103.1	107.0
Particulate Conc. at 7% O_2	mg/dncm	3.74	4.23	3.89

TABLE 2-4. DETAILS OF MM5 SAMPLING

Parameter	Units	Run 1	Run 2	Run 3
Date	--	12/5/90	12/6/90	12/6/90
Sample Time	minutes	240	240	240
Sample Volume	dscf	127.96	124.84	134.43
Stack Gas Flow Rate	dscf/hr	443000	426000	442000
Stack Gas Temperature	°F	194	198	198
Percent Isokinetic		94.4	95.6	98.9

TABLE 2-5. DETAILS OF VOST SAMPLING

Run No.	Date	Time	Volume Sampled (Liters[a])
1-A	12/5/90	1131-1211	19.7
1-B		1228-1507	20.3
1-C		1544-1624	19.8
1-D		1651-1731	19.8
2-A	12/6/90	0726-0806	20.1
2-B		0820-1042	20.0
2-C		1113-1223	19.8
2-D		1245-1325	19.8
3-A	12/6/90	1625-1705	20.0
3-B		1721-1802	19.6
3-C		1820-2020	19.8
3-D		2050-2130	20.0

[a]29.92 "Hg, 68 °F (760 mm Hg, 20 °C).

The assays conducted during the emissions testing of the LIC with an agent feed rate of 750 pounds per hour verified the destruction of GB within the LIC as indicated in Table 2-6.

TABLE 2-6. CHEMICAL AGENT MONITORING

	Run 1	Run 2	Run 3
Date	12-5-90	12-6-90	12-6-90
Run time	continuous	continuous	continuous
Quant. limit[a]	.19	.21	.21
Alarm point[a]	.79	.79	.79
Instrument	87-05-055	87-05-055	87-05-055
Maximum agent concentration (mg/m^3)	<0.0003	<0.0003	<0.0003

[a]Multiple of ASC (0.0003 mg/m^3).

The DRE for GB in each of the three trial burns was greater than 99.999998%. This result exceeded the RCRA requirement of at least 99.99% DRE for GB. The DRE calculations are given in Section 5-5. Assay for agent in the aqueous and solid process samples were found to be less than 20 parts per billion (ppb), which is the accepted drinking water standard for GB.

- Particulate Emissions

Data from the multiple-metals sampling train were used to calculate particulate emissions. Particulate concentrations (corrected to 7% O_2) in the three LIC GB trial burns were 3.7, 4.2, and 3.9 mg/dncm. Hence, the LIC particulate-emission levels were well below the RCRA particulate limit of 180 mg/dncm at an oxygen content of 7%. The corresponding measured particulate concentrations after correction of the data to 12% CO_2 (this is not a RCRA requirement but is required as an alternative manner of reporting particulate results by certain state agencies) were 4.6, 5.1, and 4.8 mg/dncm.

- HCl and HF Emissions

The HCl emission rates for the three burns were, respectively, ≤0.0023 lb/hr, ≤0.035 lb/hr, and ≤0.013 lb/hr. The allowable limit for HCl emission is 4 lb/hr. Thus, the measured HCl emission rate for each run was well under the limit. The removal efficiency (RE) could not be calculated because no measurement of HCl input was made (GB contains no chlorine). The corresponding emission rates for HF were 0.11, 0.24, and 0.20 lb/hr.

- Combustion Efficiency

Combustion efficiency (CE) is calculated from the amounts of CO and CO_2 in the stack gas according to equation 2.1:

$$\% \ CE = \frac{[CO_2] - [CO]}{[CO_2]} \times 100\% \qquad 2.1$$

The hourly combustion efficiencies for the trial burn tests ranged from

The hourly combustion efficiencies for the trial burn tests ranged from 99.94% to 99.99%. These combustion efficiencies satisfied the regulatory requirement of 99.9% for this parameter.

- Analyses of Incinerator-Process Samples for Metals

The process water, scrubber brine, scrubber liquor, and caustic solution were analyzed for arsenic, barium, cadmium, chromium, lead, selenium, silver, and mercury. These process media are contained within the loops of the pollution abatement system (sampling locations are listed in Table 3-1). Lead concentrations above the regulatory limits were present in three of the scrubber brine samples as shown in Table 2-7.

The scrubber-brine samples indicated a transient concentration of lead. This is apparent from the decrease in lead concentration between Runs 1 and 2. The highest concentration found was prior to the start of emission testing. This pretest sample was collected within 15 minutes of steady-state operations for Run 1. Measureable concentrations of lead were not found in the post-test sample from Run 2 or in the pretest and post-test from Run 3. Based on this information, it appears that the high lead concentration may have been caused by a transient event within the PAS that was unrelated to chemical-agent feed operations. All other process samples were within the regulatory limits for all parameters tested.

TABLE 2-7. SAMPLES WITH LEAD CONCENTRATIONS ABOVE THE REGULATORY LIMIT

No.	Sample ID	Sample No.	Concentration of lead found, mg/mL	Regulatory limit, mg/mL
1	Scrubber Brine Pretest	3J-1-006	57.7	5.0
1	Scrubber Brine Post Test	3J-1-027	40.9	5.0
2	Scrubber Brine Pretest	3J-2-006	24.2	5.0

All samples were prepared according to SW-846 Method No. 3010 and analyzed by SW-846 Method No. 6010.

2.2 Nonregulated Parameters

Results from the VOST, MM5, and M5MMT sampling are summarized in Table 2-8.

TABLE 2-8. SYSTEM PERFORMANCE FOR NONREGULATED PARAMETERS

Emitted substances[b]		Concentration, $\mu g/m^3$[a] Run 1	Run 2	Run 3
Products of Incomplete Combustion (PICs)				
Volatile Organics	Chloromethane	410	330	340
	Benzene	45	ND[c]	ND
	Methylene chloride	1400	14	130
	Acetone	50	25	34
	2-Butanone	42	33	37
	4-Methyl-2-pentanone	4.7	ND	ND
	2-Hexanone	3.5	ND	ND
	Tetrachloroethene	1.2	0.2	0.8
	1,1,2,2-Tetrachloroethane	1.0	ND	ND
	Styrene	3.3	ND	ND
	Xylenes	0.9	ND	ND
	Bromoform	2.8	3.0	1.0
	Toluene	0.7	0.8	1.1
	1,1,1-Trichloroethane	5.4	ND	NR[d]
	1,2-Dichloropropane	ND	490	ND
	cis-1,3-Dichloropropene	ND	420	ND
	Vinyl Acetate	ND	0.7	ND
Semivolatile Organics	2-Methylphenol	120	71	35
	4-Methylphenol	832	24	ND
	3-Methylphenol	10	1.3	ND
	Dimethyl phthalate	7.2	21	17
	Diethyl phthalate	423	9.4	30
	Di-n-butyl phthalate	4.9	7.5	5.5
	Di-n-octyl phthalate	22	ND	ND
	bis(2-Ethylhexyl)-phthalate	ND	12	12
Polychlorinated Dibenzo-p-dioxins and Dibenzofurans	Tetra CDD/F	8E-5	2E-5	2E-5
	Octa CDD/F	8E-5	ND	ND

(continued)

TABLE 2-8. SYSTEM PERFORMANCE FOR NONREGULATED PARAMETERS (continued)

Emitted substances[b]		Concentration, $\mu g/m^3$[a]		
		Run 1	Run 2	Run 3
Metals	Arsenic	ND	ND	14
	Lead	16	6.4	6.1
	Barium	6.7	40	ND
	Boron	6.4	120	15
	Phosphorous (asP)	250	270	77
	Zinc	51	160	NR
	Nickel	0.3	NR	NR
	Manganese	54	34	16

[a]Reported with two significant figures if greater than 1 $\mu g/m^3$ and one significant figure if less than 1 $\mu g/m^3$.
[b]Values corrected for the amount found in the field blank.
[c]ND = 0.6 $\mu g/m^3$ for volatile organics; 2.8 $\mu g/m^3$ for semivolatile organics; 6E-6 $\mu g/m^3$ for PCDD/F; 6.7 $\mu g/m^3$ for As; 2.7 $\mu g/m^3$ for Ba.
[d]NR = Not reported, field blank value larger than sample.

2.2.1 Products of Incomplete Combustion

Volatile PICs found during the LIC trial burn were identical in analyte makeup and were generally even lower in concentration than those found during previous blank fuel-oil burns conducted on the DFS and LIC in 1989 (Volatile and Semivolatile Emission Test on JACADS Liquid Incinerator System (Blank Fuel Oil Burn) Sept. 29, 1989, Southwest Research Project 01-1301-548). Specifically, bromoform, acetone, 2-butanone, and methylene chloride levels were lower during these LIC trial burns than those found during the blank fuel-oil testing. Although chloromethane levels were higher than those found during blank testing, this compound is expected with any incineration process, and the levels were consistent with those that have been found elsewhere in similar systems.

Semivolatile PICs consisted primarily of methyl phenols and phthalates and were found at similar levels during blank fuel-oil burns conducted on the DFS and LIC systems during 1989.

Accordingly, no significant chemical-agent-related degradation products were found among the incomplete combustion products from the LIC trial burns. That is, all compounds that were found were related to the fuel oil used to fire the system and were thus entirely consistent in character and concentration with the gases and vapors that are emitted during any other typical fossil-fuel combustion operation.

2.2.2 Dioxin/Furan

Dioxins and furans were found in the LIC stack emissions during the trial burns at levels approaching the quantition limits; the emitted

concentrations of total dioxin/furan from the LIC ranged from 0.02 to 0.16 ng/m^3. But previous studies of municipal incinerators have demonstrated emissions of dioxins in the 50- to 7000-ng/m^3 range. Moreover, conversations with EPA personnel involved in the assessment of incinerators relative to dioxin/furan emissions suggests that a level of 10 ng/m^3 should not cause concern.

The pattern of the dioxin/furan emissions displays a steadily downward trend from 0.16 to 0.02 ng/m^3 across Runs 1, 2 and 3. Indeed, the lowest dioxin/furan levels that were observed in this study (0.02 ng/m^3) approached the quantification limit of the analytical method. Furthermore, continued operation probably would have shown an even further reduction in the emission rate because there are no chlorine feed sources other than, perhaps, the process water and the fuel-oil contaminants. An assumption of nondetectable dioxin/furan emissions after continued operations with this agent is, therefore, supported by these findings.

2.2.3 Metals

Metals emissions from the LIC were limited to the analytes that were expected (Pb, Ba, P, As, Ni, Mn) given the acidic gas stream and the duct composition. The concentrations of these substances were well below the regulatory limits (Guidance on Metals and Hydrogen Chloride for Hazardous Waste Incinerators. Vol. IV of the Hazardous Waste Incineration Guidance Series, Draft, March 1989, USEPA-OSW).

2.3 Quality Assurance/Quality Control

All data were judged to be representative based on the quality control data obtained. This quality control data includes analyte recoveries, train performance, sample tracking and custody documentation. Details can be found in Section 6. All samples that were successfully collected were analyzed and no losses were experienced in custody transfer, shipping, laboratory preparation, or analysis except that the container for the acetone front wash from the M5AT for Run 1 was broken. But this accident had no impact on the data because the M5AT was not used to calculate particulate levels and the acetone wash was not necessary for measurement of acid levels.

Recoveries of surrogate spikes and matrix spikes typically were within the expected ranges. In instances where a spike was outside the recommended range, an evaluation of other quality control data pertinent to the sample analysis invariably affirmed that the data were of acceptable quality. The following conclusions concerning data quality can be drawn for the analyte groups within the various matrices:

- Volatile, semivolatile, and PCDD/F surrogate recoveries were within method limits.

- The results for volatile and semivolatile organic-compound matrix spikes for the incinerator-process samples were generally within the method advisory limits. Some recoveries outside the advisory

limits were observed in the semivolatile analyses and were probably a result of matrix effects. PCDD/F matrix-spike results for the incinerator process samples were within applicable method limits.

- Instrument tuning, calibration, and internal-standard recoveries met criteria for all volatile and semivolatile assays.

- HCl recoveries from matrix spikes and blind field spikes were all within the acceptable limits of the applicable methods.

- Metal matrix spike and duplicate sample recollected were within acceptable limits established by the applicable methods for most inorganics in most samples. As anticipated, samples that contained chloride gave low recovery of silver and the 18% caustic samples gave low recovery for all metals.

2.4 Heat and Mass Balances

Heat and mass balances were carried out around the LIC. Details of these balances can be found in Appendix H. The mass balances revealed that approximately 37% of the total gas flow out of the stack could be accounted for by measured input streams to the primary and secondary chambers of the incinerator. Another 21% could be accounted for by evaporation of water from the Quench and PAS needed to account for the measured stack moisture content. The remaining 42% may be presumed to be unmetered furnace room ventilation air which is introduced by design between the exhaust of the secondary chamber and the inlet to the quench.

Excellent closure (100% to 108%) was obtained for carbon, the one constituent that entered only in the fuel and agent. This indicates that the incinerator flue gases were totally conveyed to the stack and that no other combustion sources contributed to the stack flow.

The total energy input rate from the fuel oil and GB agent was 11.55 million BTU per hour for the primary chamber in all three tests. The energy input rate for the secondary chamber from the fuel oil feed was about 1.6 million BTU per hour (range 1.53 to 1.68). These rates are based on the Lower Heating Values of the fuel oil and agent. So the total energy input ranged from 13.1 to 13.2 million BTU per hour. About 0.2 million BTU per hour of the primary and secondary chamber losses were recovered in the ventilation air. Estimated heat losses from the combined primary and secondary chambers based on mass flows and temperatures were 2.0 to 2.2 million BTU per hour (3.7 to 3.9 million BTU/hr including evaporation of water sprayed into secondary). The energy required for evaporating water in the Quench and PAS in quantities sufficient to account for the measured stack gas moisture contents was about 9.4 million BTU per hour. The losses in heating the scrubber brine and liquor plus the sensible heat carried by the flue gas exiting the PAS totaled about 1.9 million BTU per hour. Thus the calculated total input heat rate was about 89% of the calculated net losses.

3. TEST FACILITY DESCRIPTION

3.1 JACADS Description

Figure 3-1 shows the location of Johnston Atoll in the central Pacific Ocean. This atoll is quite isolated from populated islands in the region. lying about 825 miles southwest of the Hawaiian Islands, 900 miles northwest of Palmyra Island, 1350 miles north of Howland Island, and 940 miles southeast of Midway Island. The closest land to Johnston Atoll is the French Frigate Shoals, about 530 miles away. Figure 3-2 illustrates the general layout of Johnston Island, the principal island of four on the atoll. All four of the islands are wholly or largely manmade, with Johnston Island being about 2 miles long by 1/2 mile wide. The LIC is contained within the JACADS facility area shown in Figure 3-2.

Figure 3-3 is a simplified flow diagram of the treatment process. The overall JACADS treatment process is based on the destruction of toxic agents by incineration. Once the anticipated plant operations are underway, the munitions-processing step includes initial removal of explosives and draining of the toxic agent. The DFS processes (1) drained rockets and mines, (2) explosives and propellants removed from cartridges and projectiles, and (3) spent decontamination solution. The MPF thermally decontaminates all drained ton containers and drained munitions (with their explosives and propellants removed) other than rockets and mines. The drained toxic agents are burned in the LIC, possibly along with spent decontamination-solution. The DUN burns contaminated and noncontaminated dunnage.

Offgases from the DFS, the MPF, and the LIC are scrubbed by a PAS. The DUN has a dry offgas cleaning system. The scrubber liquid from the wet scrubbers is pumped and fed to dryers to reduce the brine to a dry salt.

3.2 LIC Description

The LIC is designed to destroy liquid chemical agents (GB, VX, HD) and spent decontamination solutions. Agents will not be blended together. Rather, they will be processed during separate "campaigns" with complete facility clean-up between each agent type. Figure 3-4 illustrates the principal components of the LIC system. Sampling locations are indicated by the letters C, D, E and J and are described in Table 3-1. The LIC consists of two refractory-lined combustion chambers followed by a quench and a Pollution Abatement System (PAS). Agent is introduced into the Primary Incineration Chamber that is followed by a Secondary Chamber where the destruction of the agent is completed and into which liquid decontaminant solutions can be introduced and thermally destroyed. The Primary Chamber is fueled by the agent itself with auxiliary heat input from JP5, if needed. The Primary Chamber exhaust-gas temperature is nominally 2700 °F. Each of eight sensors for the Primary Chamber is monitored continuously. The parameters measured are:

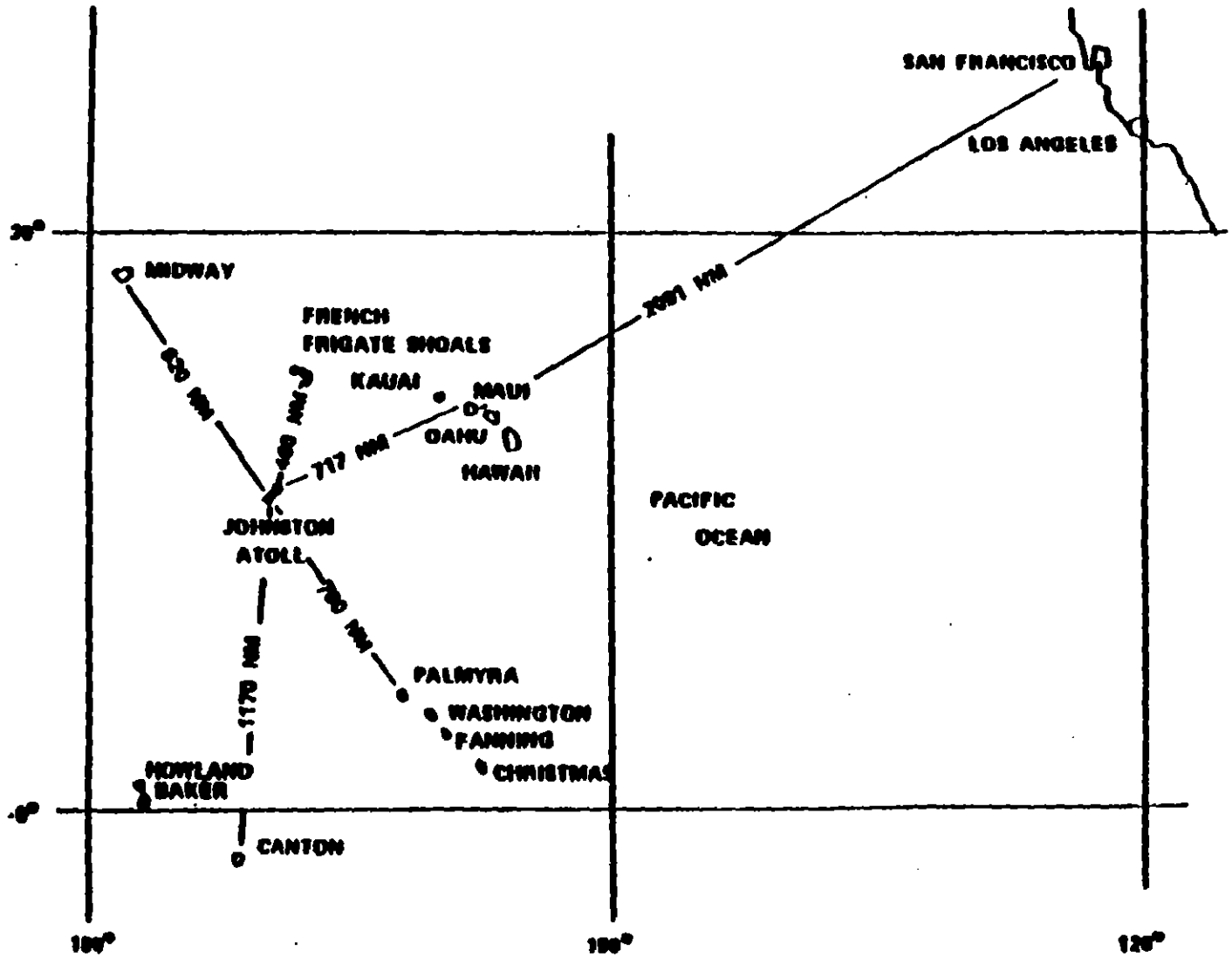

Figure 2.1 LOCATION OF JOHNSTON ATOLL RELATIVE TO OTHER ISLANDS

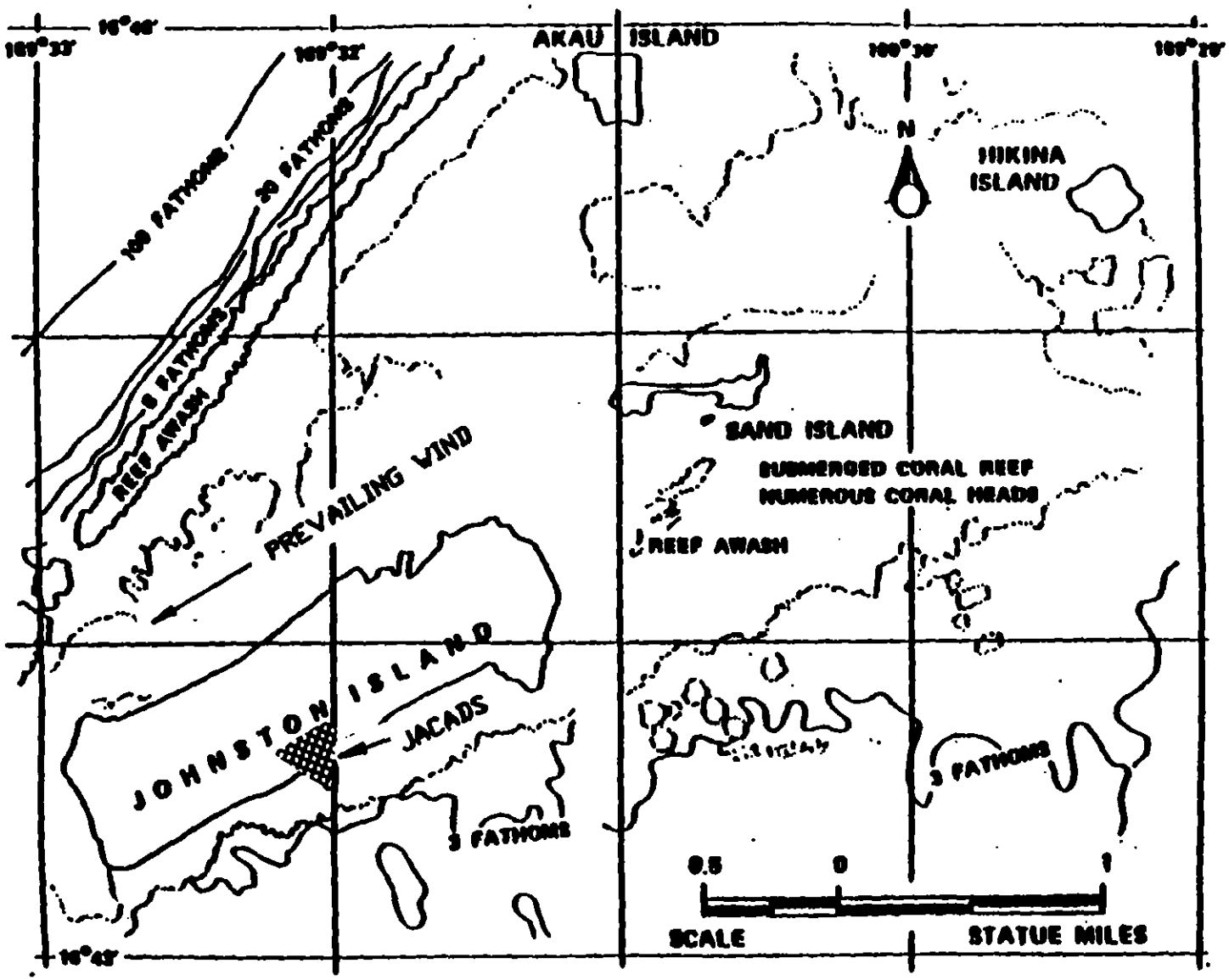

Figure 3-2. MAP OF JOHNSTON ATOLL

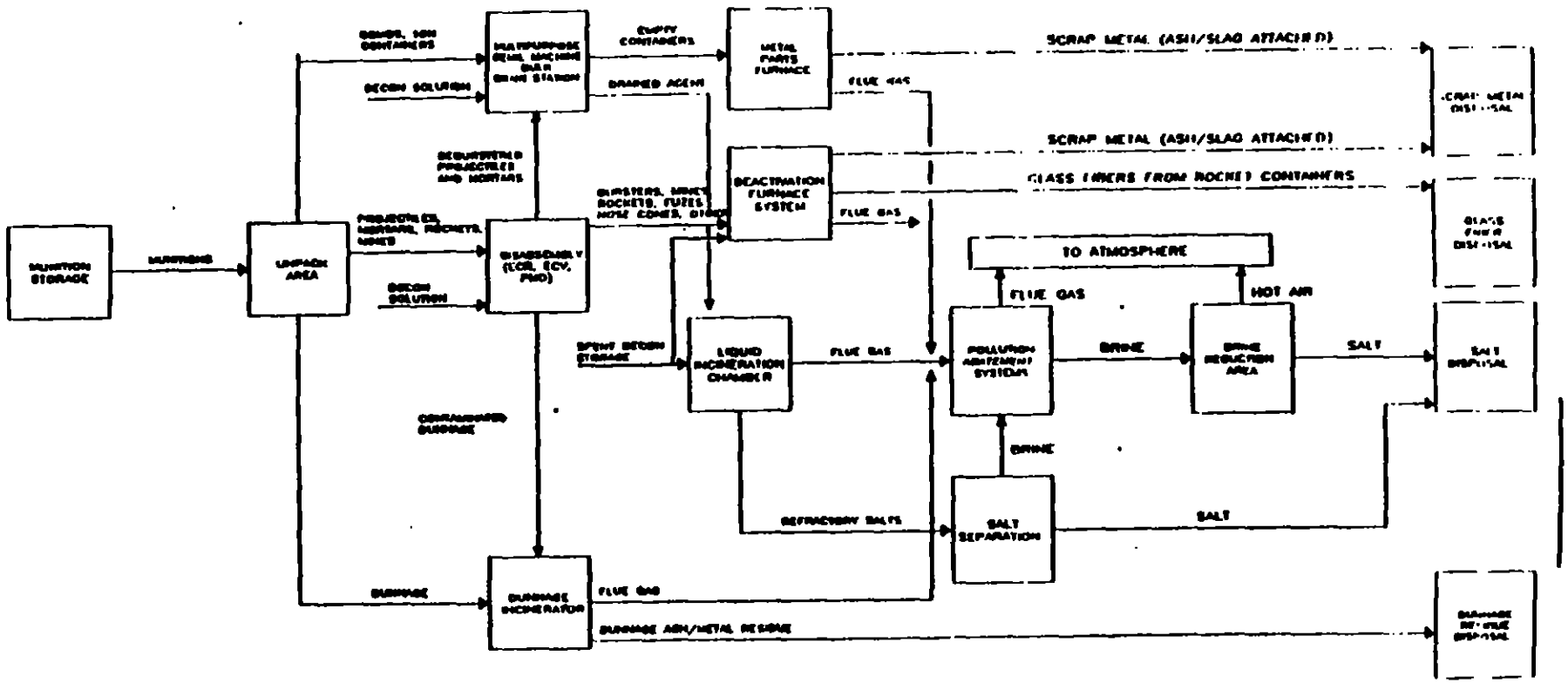

Figure 3-3. JACADS SIMPLIFIED PROCESS FLOW DIAGRAM.

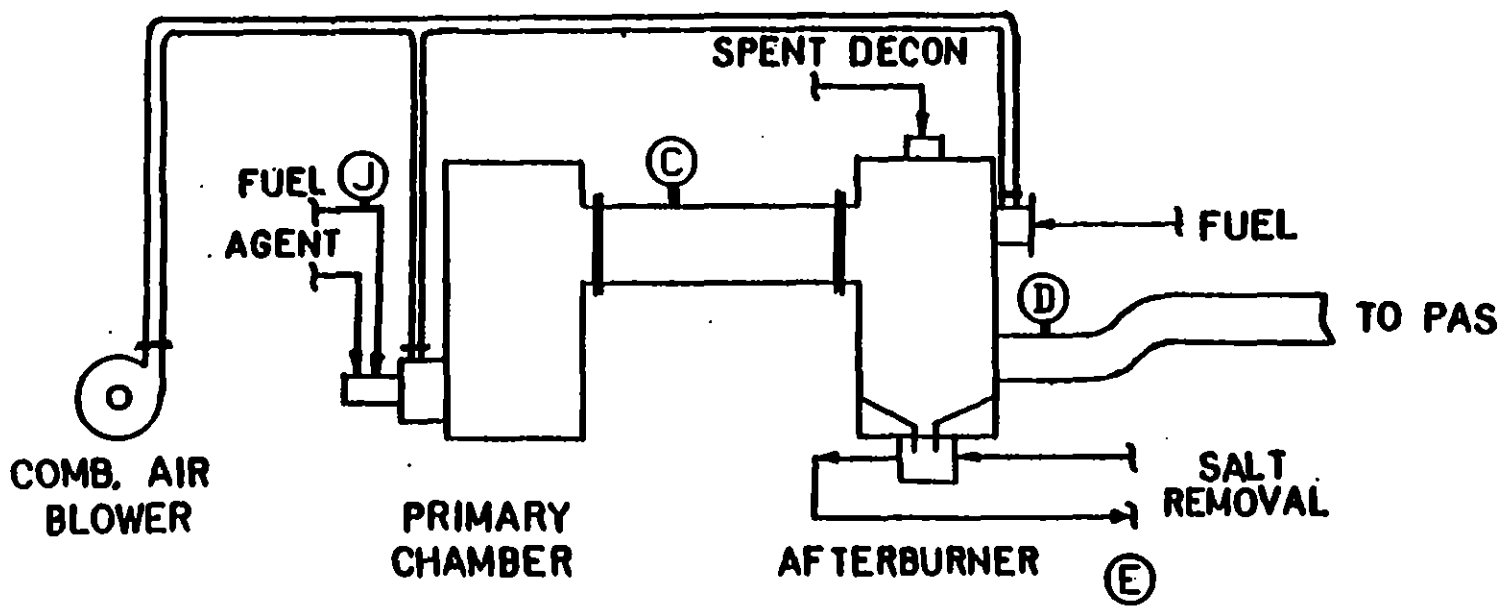

Figure 3-4. **Schematic Diagram of the Liquid Incinerator (LIC)**

fuel flow
agent flow
combustion-air flow
propane flow
exhaust-gas temperature
wall temperature
pressure
exhaust O_2 concentration

The Secondary Chamber is fueled by JP5 and has a nominal exhaust-gas temperature of 2000 °F. Seven sensors for the Secondary Chamber are monitored continuously. These are:

fuel flow
water/decon solution flow
propane flow
combustion-air flow
exhaust-gas temperature
exhaust O_2 concentration
exhaust CO concentration

In addition, the ventilation-air temperature is logged continuously in the furnace room.

Combustion gases from the Secondary Chamber pass through a PAS for discharge to the atmosphere. The PAS is illustrated in Figure 3-5.

A general description of the PAS subsystems and their function is provided below:

(a) The quench tower cools the exhaust gases before they enter the venturi scrubber. Clear water or scrubber brine from the packed tower sump is sprayed into the quench tower to reduce the temperature of the flue gas. The operating parameters pertaining to the quench tower that are monitored are:

inlet-gas temperature
brine flow rate
exhaust-gas temperature

(b) The venturi scrubber is a variable-plug throat design. Scrubber brine from the packed tower sump is injected into the top of the venturi. Brine droplets formed in the venturi collect particlate matter principally by collision, and neutral salts are formed from acid gases such as HCl and HF by reaction with the caustic in the brine. The venturi scrubber is designed to remove 95% of all particles larger than 0.5 microns. The sensors monitoring the venturi parameters are:

brine flow rate
brine pH
brine density
pressure drop

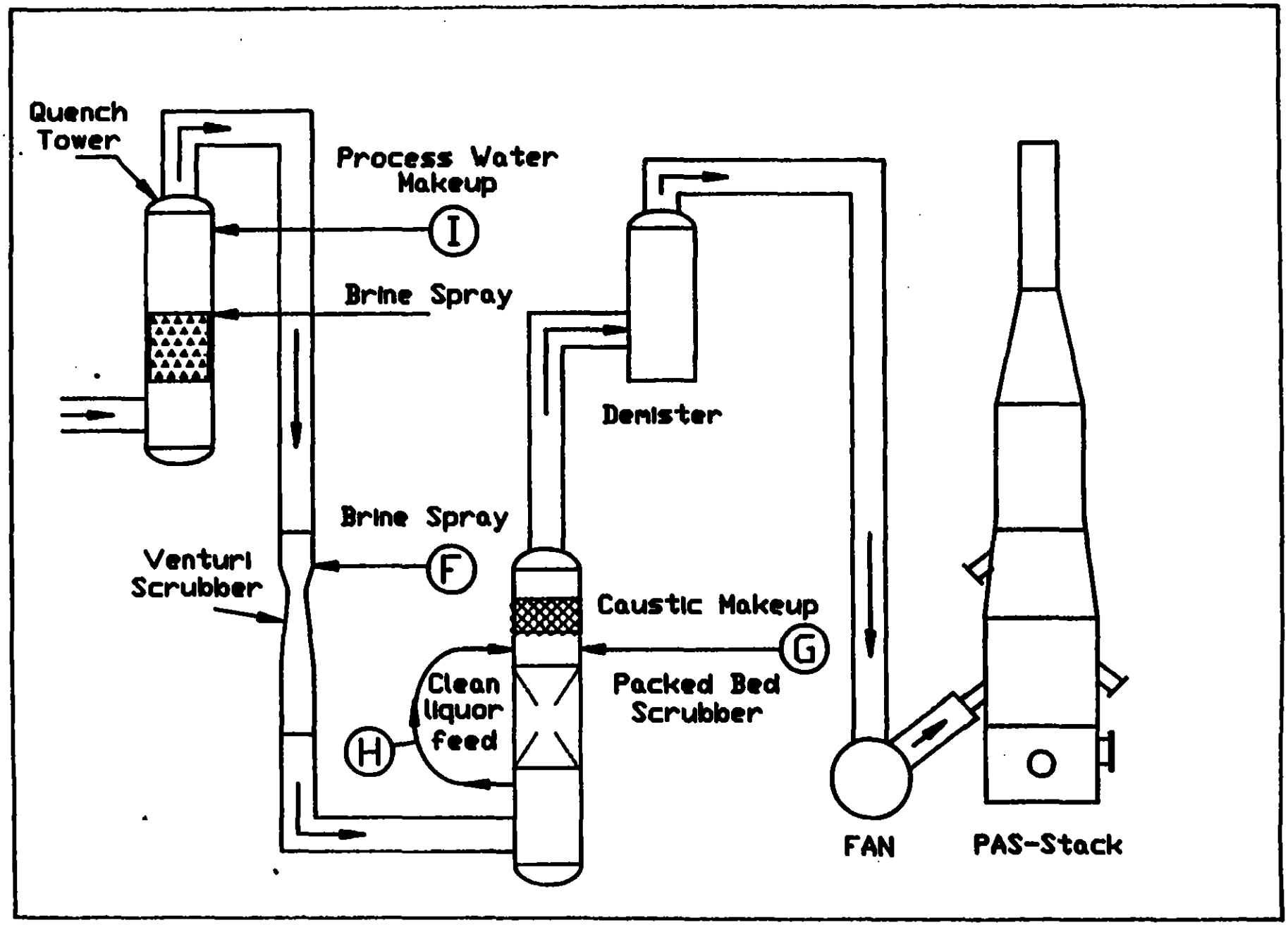

FIGURE 3-5. Process Diagram and Sampling Points for Pollution A tement System (PAS)

(c) The packed-bed scrubber tower operates at 85 percent of flooding and is designed to provide at least 95 percent sulfur dioxide removal. The packed bed consists of polypropylene Interlox saddles. Clear liquor is used to irrigate the packed-bed section of the tower, and further acid gas removal is effected in the packed bed by reaction with caustic in the clear liquor. The sensors monitored for the packed-bed are:

liquor flow rate
liquor pH
liquor density
pressure drop

(d) The demisters remove liquid carryover from the packed bed. They also remove the fine H_3PO_4 mist that is formed when gas laden with P_2O_5 is cooled with water. The P_2O_5 is produced by the incineration of chemical agents VX or GB. The pressure drop across the demisters is continuously monitored.

(e) The induced-draft fan moves the exhaust gases through the PAS. Dampers control the flow to maintain a negative pressure in the LIC. The electrical current drawn by the fan is monitored continuously.

(f) A 100-ft stack serves to exhaust the clean gases to the atmosphere. This stack is of varying diameter due to its function as the end system for three of the four incinerators/kilns. This is the only PAS subsystem in the JACADS facility that is common to all four incinerators. Figure 3-6 illustrates the stack and the letters on the figure indicate the sampling locations described in Table 3-1. The stack parameters that are monitored continuously are CO, O_2 and chemical agents are monitored by ACAMS.

The LIC waste streams include the stack exhaust gas, the scrubber brines, and the refractory salts. The scrubber brines are moved through a holding tank before they are processed in moisture-removal and salt-drumming operations. The refractory salts are generated on a periodic basis and are drummed for appropriate disposal.

3.3. Agent for RCRA Trial Burn

Agent GB was the material being incinerated during this set of trial burns. There are no POHCs from 40CFR261, Appendix VIII, in any of the materials fed into the LIC. However, GB, VX, and HD are toxic chemical compounds and are, therefore, appropriate candidate materials for designation as POHCs. Because GB represents the majority of the material to be fed to the LIC, and because this agent has, thus far, always been the most difficult of the three to incinerate, this agent was selected as the POHC for trial-burn purposes.

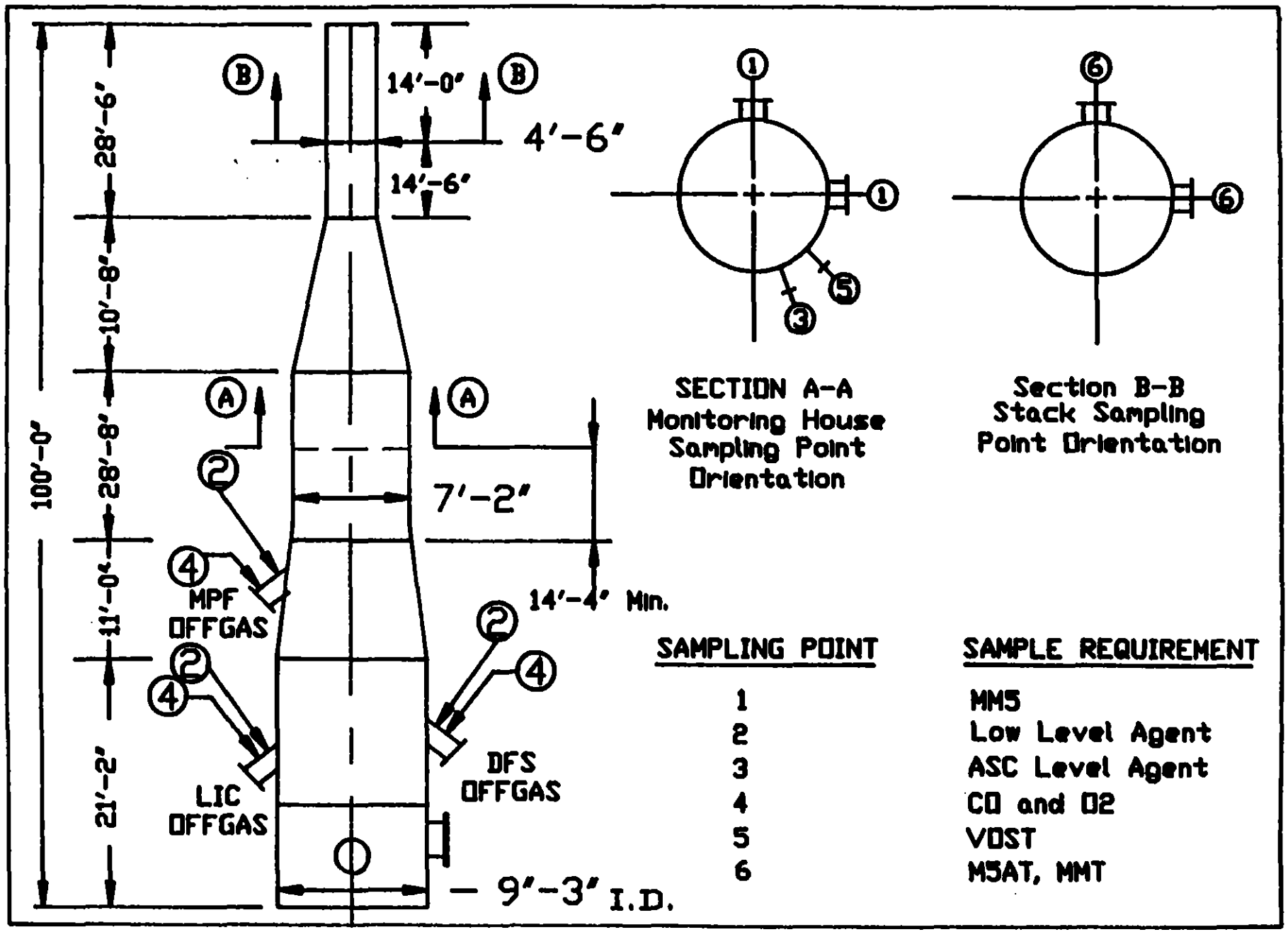

FIGURE 3-6. MPF, DFS, AND LIC STACK SAMPLE POINT LOCATIONS

The chemical name for GB is isopropyl methyl phosphonofluoridate ($C_4H_{10}FO_2P$, M.W. = 140). It has a specific gravity of 1.09 (liquid) relative to water at 40 °C and 4.8 (vapor) relative to air, a specific heat of 0.416 BTU/lb °F, a boiling point of 316 °F, a heat of vaporization of 144 BTU/lb, and a higher heat of combustion of 10,073 BTU/lb. The agent-feed rate during these tests was 750 lb/hr. The maximum design agent-feed rate for the LIC was 1200 lb/hr.

3.4 Sampling Locations

A summary of the sampling locations and sample types is given in Table 3-1. The sampling location for the MM5 was approximately 52 ft above the ground. The sampling ports were located 13 ft (1.81 stack diameters) downstream from a constriction in the stack and 19 ft 5 in. (2.71 stack diameters) upstream from a constriction in the stack. The stack-sampling location for the M5AT and M5MMT was 86 feet above ground. These ports were 12 feet (2.67 stack diameters) below the top of the stack and 13.5 feet (3 stack diameters) from the nearest upstream flow disturbance. Because of the close proximity of flow disturbances to the sampling levels, the sampling traverses were made with the maximum number of points (24) called for by the EPA methods. The actual points that were used are detailed in Tables 3-2 and 3-3.

TABLE 3-1. LIC SAMPLING LOCATIONS

Site from Figure 3-4 and 3-6	Location on Figure 5-1	Matrix	Sampling Method
A	Stack Platform	Exhaust	M5AT MMT
B	Common House	Exhaust	MM5 VOST CEM ACAMS
C	Primary Chamber	Primary Exhaust	CEM
D	Secondary Chamber	Secondary Exhaust	CEM
E	Salt Removal System	Salt Residue	Scoop
F	PAS Valve 896	Brine	Tap and Line

(continued)

TABLE 3-1 (continued)

Site from Figure 3-5 and 3-6	Location on Figure 5-1	Matrix	Sampling Method
G	Caustic Makeup NaOH Valve 312	Caustic	Tap and Line
H	PAS Valve 901	Scrubber Liquor	Tap and Line
I	Process Water DSC valve 506	Water	Tap and Line
J	Oil Valve 427	Fuel Oil	Tap and Line

TABLE 3-2. LOCATION OF SAMPLING POINTS
M5AT AND MMT

Point Number	Percent of Diameter From Wall	Distance From Wall
1	2.1	1 1/8 "
2	6.7	3 5/8 "
3	11.8	6 3/8 "
4	17.7	9 9/16"
5	25.0	13 1/2 "
6	35.6	19 3/16"
7	64.4	34 11/16"
8	75.0	40 3/8 "
9	82.3	44 5/16"
10	88.2	47 1/2 "
11	93.3	50 1/4 "
12	97.9	52 3/4 "

The sampling ports are located 13 ft (2.90 stack diameters) downstream from a constriction in the stack and 14 ft 1/2 in. (3.13 stack diameters) upstream from the outlet of the stack. The locations of the sampling points were calculated from the following:

Port and Wall Thickness = 4 1/8 in.
Inside Stack Diameter = 53 7/8 in.

TABLE 3-3. LOCATION OF SAMPLING POINTS FOR MM5 TRAIN

Point Number	Percent of Diameter From Wall	Distance From Wall
1	2.1	1 13/16"
2	6.7	5 3/4 "
3	11.8	10 3/16"
4	17.7	15 1/4 "
5	25.0	21 9/16"
6	35.6	30 11/16"
7	64.4	55 7/16"
8	75.0	64 9/16"
9	82.3	70 7/8 "
10	88.2	75 15/16"
11	93.3	80 3/8 "
12	97.9	84 5/16"

The sampling ports are located 13 ft (1.81 stack diameters) downstream from a constriction in the stack and 19 ft 5 in. (2.71 stack diameters) upstream from the outlet of the stack. The locations of the sampling points were calculated from the following:

Port and Wall Thickness = 8 13/16 in.
Inside Stack Diameter = 86 1/8 in.

3.5 Facility Instrumentation

The JACADS LIC facility includes several continuous gas-emission analyzers (CEMs) and a process data logging system (PDAR). Specifically, there are O_2 monitors at the exhaust of the Primary Chamber, at the exhaust of the Secondary Chamber, and at the stack. Moreover, CO monitors are located at the exhaust of the Secondary Chamber and at the stack, and ACAMS units are located at the LIC fan outlet and at the stack to provide agent-concentration data and rapid warning of detectable agent in the flue gases. Table 3-4 provides a general summary of the CEM characteristics and specifications for the LIC.

Process data is logged by the PDAR system continuously throughout all operations of the JACADS facility. Data are taken at approximately one-second intervals and averaged over a time span of four minutes. For each averaging period the minimum, maximum, and average value of each process variable is logged.

TABLE 3-4. FACILITIES EMISSIONS MONITORING INSTRUMENTATION

Parameter	Model & Type of Instrument	Sampling Location	Type of Output	Design Range	Operating Range	Accuracy	Precision
Oxygen	Thermax Model 45 Paramagnetic Analyzer	Exhaust Stack Primary Outlet Secondary Outlet	4 to 20 ma	0 to 25% Oxygen in Exhaust Gases	2 to 18% Oxygen in Exhaust Gases	±1% of full scale	±1% of full scale
Carbon Monoxide	Anarad Model AR-50R NDIR	Exhaust Stack Secondary Outlet	4 to 20 ma	0 to 1,000 ppm in Exhaust Gases	5 to 200 ppm in Exhaust Gases	±1% of full scale	±1% of full scale
GB	ACAMS Gas Chromatography	Exhaust Stack	0 to 1 Volt	0.00001 to 1 mg/m^3	0.00001 to 0.001 mg/m^3 or 52 part per trillion by volume (pptv)	±25%	±25%

4. TEST PROCEDURES

4.1 Preparation for Testing

All equipment and instrumentation was calibrated as required and was rendered operational prior to the start of the test. The sample feed consisted of GB that had been collected from M55 rockets. The rockets had been previously destroyed in the DFS. The agent feed rate during these tests was 750 lb/hr.

The incinerator and PAS operating criteria are as follows;

Primary Chamber exhaust temperature	2700 ± 150 °F
Secondary Chamber exhaust temperature	2000 ± 150 °F
Carbon monoxide	≤100 ppm hourly avg.
Carbon monoxide	200 ppm peak
Scrubber liquid flow	≥395 gpm
Packed Bed delta P	1 - 10 in. H_2O
Venturi delta P	5 - 50 in. H_2O
Scrubber pH	≥7

4.2 Continuous Monitoring Methods

4.2.1 Continuous Emission Monitors

Continuous emission monitors are used at JACADS to determine CO and CO_2. The monitors are checked for drift and span every 24 hr. The daily checks are included in Appendix K.

4.2.2 Chemical Agent Monitors

The ACAMS is an automated gas chromatograph that is designed to analyze chemical agents. The sequence of analysis for an ACAMS unit is as follows: collect samples onto a solid sorbent tube, thermally desorb samples into an analytical column, then the column is heated using a temperature program so the compounds elute from the column to the flame-photometric detector. The detector quantitatively measures phosphorus compounds as GB and VX or sulfur compound as mustard.

The ACAMS units are calibrated every 30 days to alarm set-points of 0.0003 mg/m^3 for GB stack sampling. A calibration challenge is also performed every 12 hr, and set-points are recalibrated if necessary. ACAMS calibration and challenge data are included in Appendix K.

4.3 Manual Sample-Collection Methods

Sampling was performed according to the "Sampling and Analytical Protocol for the Resource Conservation and Recovery Act (RCRA) Trial Burns and the Toxic Substance Control Act (SCA) Demonstration Test Burn at JACADS" (included as Appendix J). Standard methods were used to collect the samples. A brief description of the methodology that was employed and the samples that were generated is presented within this section.

4.3.1 Modified Method Five (MM5)

Method 0010 from SW846 was used to collect samples for determinations of semivolatile PICs and dioxins/furans. The method utilized a Method 5 train in combination with a porous-polymer (XAD-2) sorbent tube. The front half of the train consisted of a heated, glass-lined probe and a heated filter. The back half consisted of a water-cooled condenser, one XAD-2 sorbent tube, and a moisture-collection flask prior to the Method 5 series of impingers. A line drawing of the sampling system is presented in Figure 4-1.

All train glassware was cleaned with a 1:1 solution of methanol/ methylene chloride prior to use. All connections were sealed with DuPont Krytox grease. The MM5 train was set up to collect 3 to 4 m^3 of stack gas over a 3- to 4-hr period. A minimum volume 105 ft^3 is required by the cited method, but a volume of 120 ft^3 was collected during the LIC trial burns to enhance sensitivity. During recovery, all glassware prior to the solid sorbent was rinsed first with toluene, then with methanol/methylene chloride to generate two separate rinse samples. The filter, sorbent, and condensate were then collected, resulting in a total of five fractions for analysis.

4.3.2 Volatile Organic Sampling Train (VOST)

Method 0030 from SW846 was used to collect samples for volatile organic compound assay. The sampling train in this case consisted of a heated quartz-lined probe, a water-cooled condenser, a Tenax-GC sorbent tube, a moisture-collection flask, another water-cooled condenser, a Tenax-GC/charcoal sorbent tube, and silica gel. A line drawing of this system is presented in Figure 4-2. All of the sorbent tubes and the condensate samples were recovered from this system for laboratory analysis. Several sorbent tubes were included as blank samples for each of the three runs. Each run provided four pairs of stack-sample sorbent tubes, each pair representing approximately 20 L of stack gases. This was a nonisokinetic sampling method.

4.3.3 Method Five Acid Train (M5AT)

Method 0050 of SW846 was used in the collection of samples for the determination of acid gases. The train is shown in Figure 4-3. Dilute H_2SO_4 was used to collect HCl. Sodium hydroxide at a concentration of 0.1 N was used following the acid impinger to collect free chlorine. The sampling process was isokinetic; hence, particles as well as acid gases could be determined. A minimum sample volume of 30 ft^3 was required. Actual sample volumes were approximately 60 to 90 ft^3. Recovery of the probe wash, filter, 2 acidic and 2 caustic impingers generated six samples for analysis.

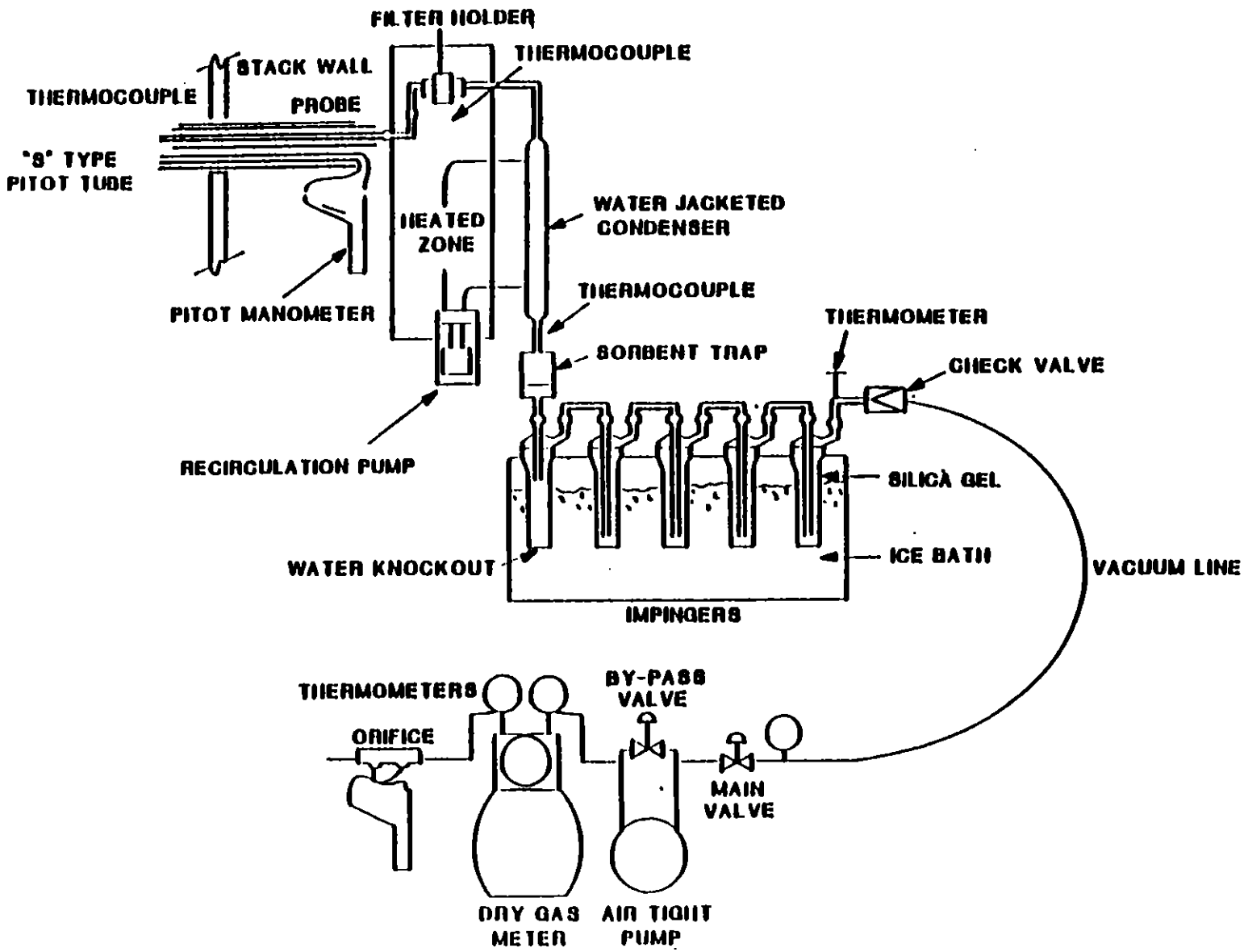

Figure 4-1. EPA Modified Method 5 Train (MM5)

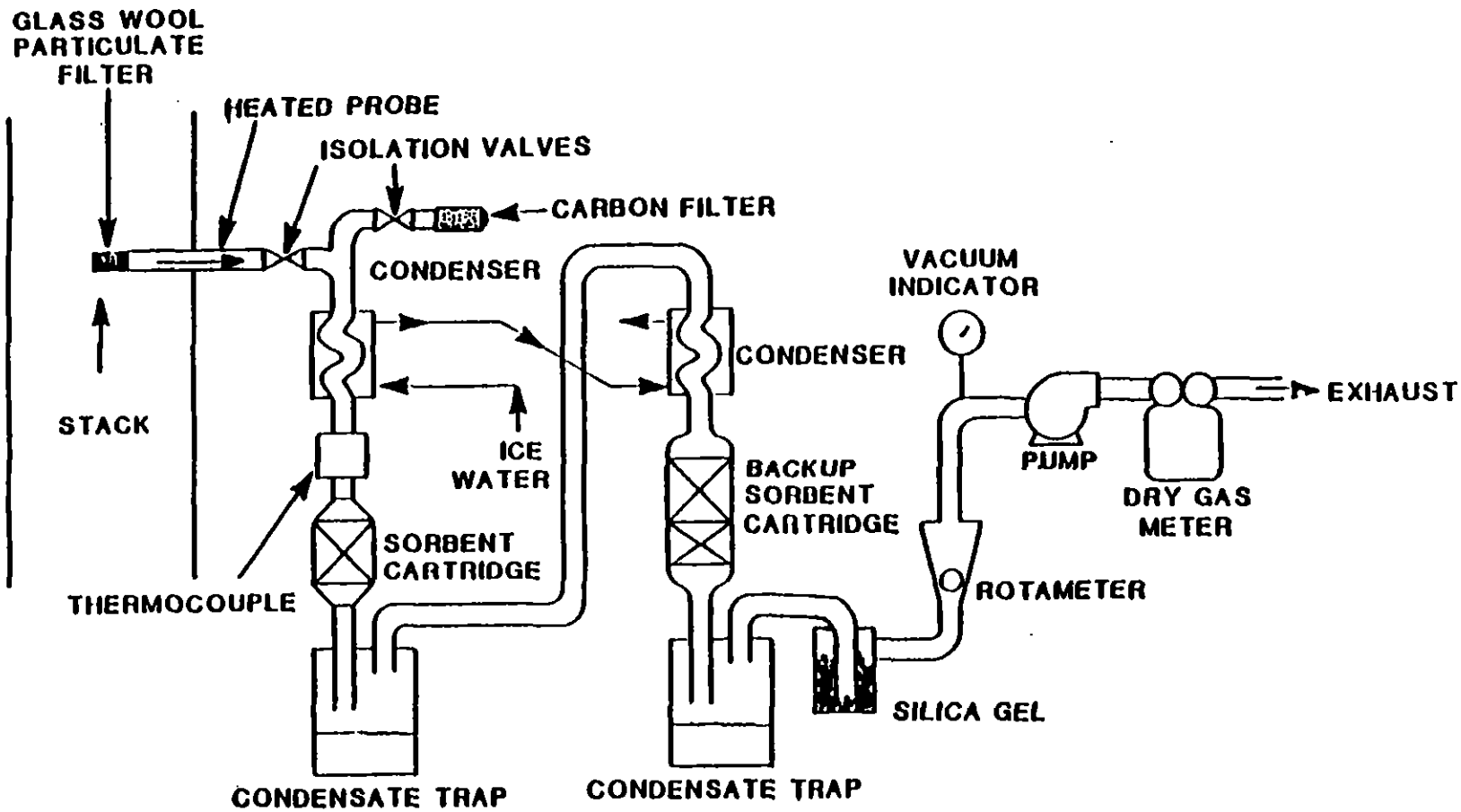

Figure 4-2. Volatile Organics Sampling Train (VOST)

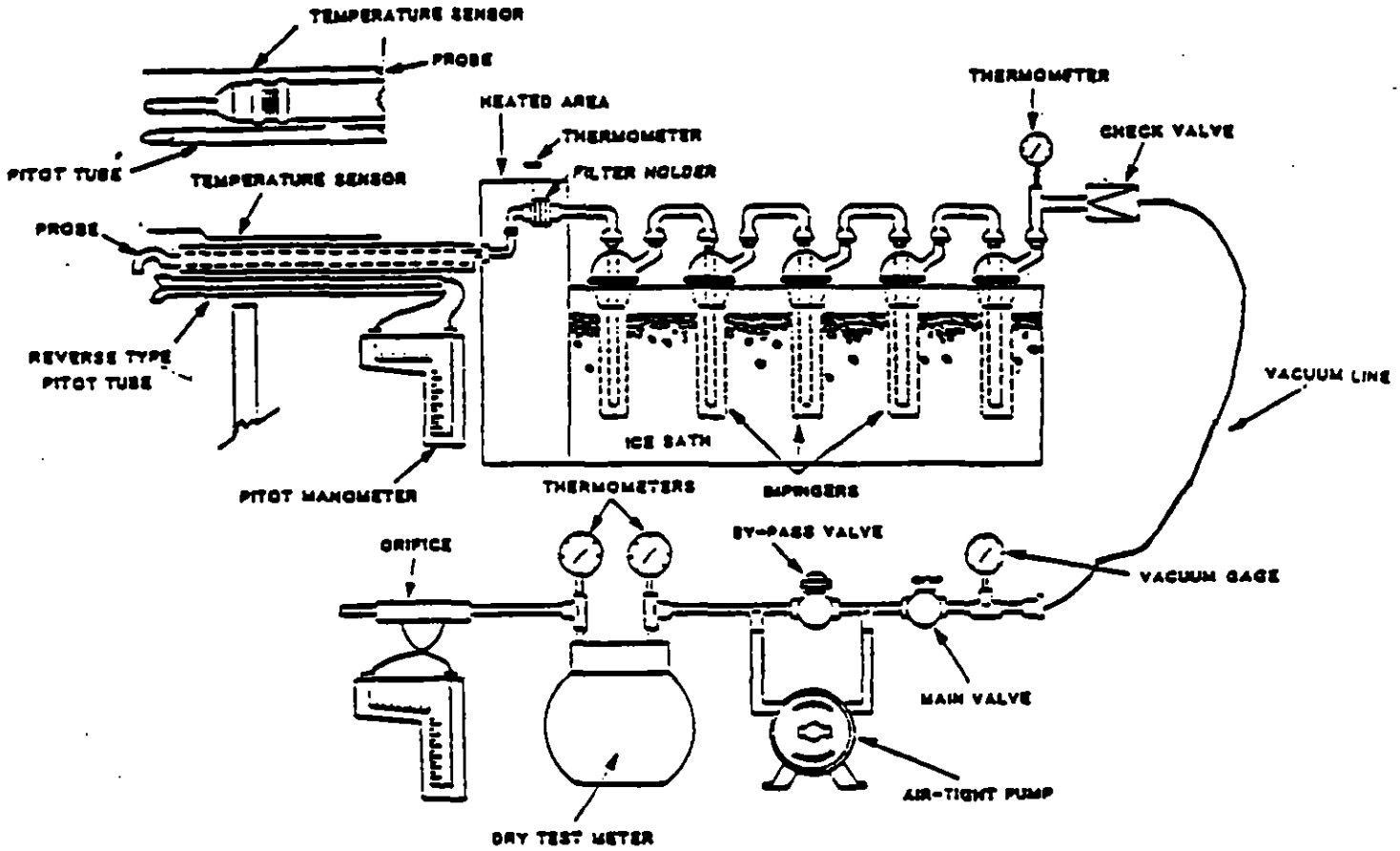

Figure 4-3. Method 5 Train. (Impinger contents for M5AT and MMT described in test.)

4.3.4 Multiple Metals Train (MMT)

Collection of samples for the determination of metal analytes was carried out with a Method 5 train equipped with additional impingers containing appropriate scrubbing solutions. Figure 4-3 presents the train configuration. Two nitric acid/H_2O_2 impingers were positioned to scrub all metals other than mercury from the gas stream, and these impingers were followed by two additional $H_2SO_4/KMnO_4$ impingers for the collection of mercury. This train was isokinetic, and particulate material could be determined gravimetrically. A minimum volume of 30 ft^3 was required; however, to enhance sensitivity, approximately 50 ft^3 were collected during the LIC testing. The resulting nine train fractions were submitted to the laboratory for analysis.

4.3.5 Orsat

Manual Orsat (EPA Method 3) were used to quantify CO, CO_2, and O_2 for molecular weight determinations. The Orsat apparatus is a portable gas system that consists of a measuring buret and three or four gas-absorption pipets connected to a manifold. Gases were collected through a moisture-removal system.

4.3.6 Support Methods

EPA Method 1, 2, and 4 were used for determination of traverse points, velocity profiles, and moisture content as required in all isokinetic sampling efforts.

4.3.6.1 Traverse Point Determination

The physical dimensions of the stack configuration relative to bends and flow disturbances will dictate the number of traverse points according to EPA Method 1. Traverses using 24 sampling points at each port were required for the sampling-port locations on the JACADS incinerator-exhaust stack.

4.3.6.2 Velocity Profile

EPA Method 2 is used for determination of velocity profiles. A preliminary velocity traverse was made at each sampling platform to evaluate cyclonic flow, but none was found. Preliminary velocity measurements were performed at each sampling location for all traverse points identified by EPA Method 1. These profiles were used in the determination of nozzle sizes and sampling rates.

4.3.6.3 Moisture Determination

A calculation of the type described in EPA Method 4, which was based on stack conditions in addition to actual gravimetric determinations, was conducted prior to the test burns. Moisture values determined from each train were then used to correct subsequent sampling events.

4.4 Sample Collection Sequence

The general sequence of events in carrying out the trial burns was as follows:

Bring the LIC up to the intended operating conditions (feed rates, air flows, temperatures, etc). During the JP5 preheat period and agent feed ramp-up period, prepare the sampling trains for the run (clean glassware, load filters, load impingers, etc.) and perform leak checks of the trains.

Once the LIC reaches the operating condition with agent feed, allow a 15- to 20-min delay for stabilization. During this delay period, collect the pretest samples of fuel oil, caustic, process water, brine, and scrubber liquor. (Analyses of the pretest and post-test fuel oil, caustic, and process-water samples provide information regarding target compounds which might enter the system as contaminants in these feed streams. Analyses of the pretest brine and liquor samples provide information regarding pre-existing concentrations of target compounds in these incinerator process streams.)

At the end of the stabilization period, begin stack sampling (MM5, M5AT, VOST trains, and first-hour Orsat).

At the end of each hour of sampling, begin a new Orsat sample, and analyze the previous Orsat sample.

As each set of samples is recovered, assign a unique sample number to each individual element included in it (ie., filter, impinger contents, impinger rinse), label each container, record pertinent information regarding each container in a logbook, and preserve the sample as appropriate (i.e., chill if required). Then transfer custody of the samples from the sampling team to the Sample Coordinator and document the transfer of custody.

At the midpoint of the test, after 120 minutes of sampling with the MM5, halt the sampling process briefly to make a port change with the MM5 train, recover the M5AT train, and prepare the MMT train for sampling. During the port change the agent feed is discontinued to permit minor LIC system maintenance (filter and strainer cleaning). The agent feed is resumed and after ramping to the final feed rate a 15-20 minute stabilization period is provided. Then resume sampling with the MM5 and MMT and continue to completion with each train.

At the conclusion of all stack sampling, collect the post-test samples of scrubber liquor, brine, fuel oil, caustic, and process water.

Following recovery and transfer of all samples to the Sample Coordinator, remove the samples from the JACADS facility to a secure storage area and pack them per EPA, DOT, and Military Airlift Command requirments for preservation and shipment.

Ship all samples by air as soon as possible. Give first priority to the most time-sensitive samples if space or flight regulations do not permit all samples to be shipped on the first available aircraft. (The

hazardous nature of some acids and flammable solvents prevents them from being shipped on passenger-carrying aircraft.)

Document the chain-of-custody transfers during shipment through detailed shipping manifests that require a signature transfer at each step other than internally in a commercial freight-handling system such as Federal Express.

Samples of 5-min duration for the particulate matter and for HCl were taken isokinetically at each traverse point using an EPA-type heated, glass-lined probe (M5AT). Moreover, samples of 3-min duration for the particulate matter and for heavy metals were also taken isokinetically at each traverse point using an EPA-type heated, glass-lined probe (MMT). Finally, semivolatile samples of 10-min duration were taken isokinetically at each traverse point using an EPA-type heated, glass-lined probe (MM5).

Each sampling train was initially leak-checked at the nozzle before each test at 15 in. of mercury vacuum and again leak-checked at the nozzle after each test at the highest vacuum reading recorded during the test. The pitot-tube lines were checked for leaks before and after each test run against a leak criterion of "not greater than 0.1 in. of mercury in 2 min". Pretest leaks were corrected prior to the start of sampling. The lines were also checked for clearance and the console manometer was zeroed before each test.

In summary, for each run, most stack sampling was conducted simultaneously. Figure 4-4 illustrates the timing for sampling during a test. The M5AT sampling process concluded somewhat before the midpoint of the overall test period, and the M5MMT sampling process started at the beginning of the third hour of sampling.

```
MM5              ************************************************
MMT                                      ***************
M5AT             ************************
VOST             *********   **********   *********   *********
ORSAT            * - - - - - * - - - - - * - - - - - * - - - - - *
PAS SAMPLES      *                                               *
                 0           1            2           3           4

                                         Time, hours
```

Figure 4.4. Timing of sampling during a typical trial-burn test.

The samples for analysis included:

a. Particulate concentration at the stack platform: two samples per test (M5AT and MMT).

b. HCl and HF concentration at the stack platform: one sample per test (M5AT).

c. Selected metals in stack emissions at the stack platform: one sample per test (MMT).

d. Volatile and semivolatile organic emissions in the common house. (MM5 and VOST)

e. CO_2 in the common house (Orsat).

f. NO_x in the common house.

g. CO and O_2 in the exhaust gases.

h. PAS brine sampled at beginning and during test from the pH sensor flush tap adjacent to PAS Valve 896.

i. Caustic makeup sampled at beginning and end of each test from NaOH Valve 312.

j. Process feed water sampled at the beginning and end of each test from DCS Valve 506.

k. Salt residue from the incineration chambers sampled at the end of the test series.

l. Fuel oil from the DFS Valve 427. (Oil pump exhaust tap).

m. Scrubber liquor sampled at the beginning and during the test from the pH sensor flush tap adjacent to PAS Valve 901.

No brine salt was sampled during the test. Table 4-1 summarizes the sampling and analysis procedures. The sampling procedures are also summarized in Appendix H.

4.5 Sampling Contingency Plan

The following contingency plans were adopted and used in these tests:

Upset conditions in the incinerator, such as the loss of a key monitor or agent alarm, or any non-steady-state incinerator condition, will result in a feed stoppage. Sampling operations will be affected by the upset condition as defined below:

Upset of 30 or less minutes	Stop trains in stack
Upset greater than 30 minutes	Remove and cap trains
Upset greater than 2 hours	Stop test
Cumulative feed stop of 2 hours	Stop test

Leak checks must be performed when trains are removed from the stack; if leaks are found, the test must be terminated.

TABLE 4-1. SUMMARY OF SAMPLING AND ANALYSIS ACTIVITY[a]

Sampling method	Sample description	Sampling period (minutes)	Sampling location	Analytical parameters	Analytical method
EPA VOST	Volatile Organic Sample Train Slow VOST	160	Stack House	Volatile PICs	EPA 8240/5040
EPA M5AT	Method 5 Acid Train	120	Stack Platform	Particulates HCl, HF	EPA 5 EPA 300 Ion Selective Electrode
EPA MM5	Modified Method Five	240	Stack House	Semi-volatile PICs PCDD/F	EPA 8270 EPA 8290
M5 Metals	Method 5 Metals Train	72	Stack Platform	Particulates, Selected Metals	EPA 5 EPA 6010/7420
EPA Ref Method 3	Orsat, CEMS	240	Stack House	CO_2, O_2, CO	EPA 3
Tap and Line	Brine		pH sensor flush tap adjacent to valve 896	EP Toxicity Metals pH Anions PCDD/F Volatile PICs Semivolatile PICs	EPA 6010/7470 EPA 9040 EPA 300 EPA 8290 EPA 8240 EPA 8270
Tap and Line	Scrubber Liquor		pH sensor flush tap adjacent to valve 901		

(continued)

TABLE 4-1 (continued)

Sampling method	Sample description	Sampling period (minutes)	Sampling location	Analytical parameters	Analytical method
Tap and Line	Process Water		DFS valve 506		
Tap and Line	Caustic		NaOH valve 312		
Scoop	Refractory Salt		Bottom of incinerator		
ACAMS	Process Monitor	240	Stackhouse LIC Duct	GB	Extraction/GC

[a]Appendix J contains the test plan and has more detailed descriptions of sampling and analysis methods.

4.6 Analysis

The procedures that were used for preparing and analyzing samples are described briefly in this section. The test plan in Appendix J also describes the analytical methods. The methods were based on standard EPA procedures, which are referenced below according to method number. Any deviations from the standard methods are documented with supporting QA/QC results.

4.6.1 Semivolatile Organics Analysis

4.6.1.1 Extractions

The XAD-2 resin cartridges for the MM5 were prepared according to SW846 Method 0010. The resin was treated for extraction of its impurities with methylene chloride for 18 hr and dried with a gentle flow of pure nitrogen. A 40-g sample of the resin was then subjected to extraction and the extract analyzed by GC/MS prior to packing the resin cartridges; no contamination was found. The resin cartridges were spiked with 10 μg of 2,4,6-trichlorophenol-$^{13}C_6$, 200 ng of 1,2,4-trichlorobenzene-d_3 and 2 ng of 2,3,7,8-tetrachlorodibenzo-p-dioxin-$^{37}Cl_4$ prior to shipment to the field.

MM5 samples were extracted from the sorbent cartridges according to SW846 Method 3540. The XAD-2 resin cartridges and filters were spiked with PCDD/F isotope-dilution standards, which consisted of the following fourteen $^{13}C_{12}$-labeled compounds: 2,3,7,8-TCDF, 1,2,3,7,8-PeCDF, 2,3,4,7,8-PeCDF, 1,2,3,4,7,8-HxCDF, 1,2,3,6,7,8-HxCDF, 1,2,3,7,8,9-HxCDF, 1,2,3,4,6,7,8-HpCDF, 1,2,3,4,7,8,9-HpCDF, 2,3,7,8-TCDD, 1,2,3,7,8-PeCDD, 1,2,3,4,7,8-HxCDD, 1,2,3,6,7,8-HxCDD, 1,2,3,4,6,7,8-HpCDD, and OCDD. In addition, the base-neutral-acid surrogates, which consisted of phenol-d_6, fluorophenol, nitrobenzene-d_5, fluorobiphenyl, and terphenyl-d_{14} were also added. All sorbent and filter samples were Soxhlet-extracted, and liquid impinger samples were liquid-liquid extracted by SW846 Method 3510. All extracts were concentrated and combined to make a single sample from each MM5. Each of the resulting samples was concentrated to 10 mL, of which 1 mL was allotted for the determination of semivolatile organics and 9 mL for determination of PCDD/Fs.

Aqueous samples (PAS brine, caustic makeup, feed water) were treated for extraction by the liquid-liquid extraction method given in SW846 Method 3510. 500 mL of each sample was placed in a separatory funnel, pH-adjusted to between 5 and 9 (if necessary), and spiked with the chlorinated organic surrogates and with the PCDD/F isotope-dilution standards. The sample was then subjected to three extractions with methylene chloride. During the ensuing sample-concentration step, the solvent was exchanged to hexane and concentrated to 10 mL, of which 1 mL was used for determination of semivolatile organics and 9 mL for PCDD/F determination.

Samples for PCDD/F analysis were cleaned up according to Method 8290. No further cleanup was performed on the portion of the sample reserved for the determination of semivolatile organics. The PCDD/F extract was partitioned against 20% aqueous KOH, 5% aqueous NaCl, several portions of concentrated H_2SO_4, and 5% aqueous NaCl (in that order). The extract was evaporated to 2 mL and eluted through an alumina column (Woelm Super 1). The fraction obtained from the 8% methylene chloride/hexane eluent was found to contain the components of interest, and this fraction was used for further cleanup and analysis. All samples were also cleaned up with an AX-21 carbon column. The toluene fraction was subjected to analysis by HRGC/HRMS.

The refractory salt sample was treated for extraction according to the Soxhlet method in SW846 Method 3540. A 10-g portion of the salt was mixed with 10 g of anhydrous sodium sulfate. The sample was then spiked with the semivolatile organic surrogates and PCDD/F isotope-dilution standards and combined with 300 mL of toluene for the extraction step. The extract was concentrated to near dryness and made up to 10 mL in hexane. A 1-mL aliquot was taken for semivolatile organics determination and 9 mL for PCDD/F determination.

The fuel-oil samples were prepared by weighing 2 g of each sample into a 10-mL volumetric flask, adding the semivolatile organics surrogates and PCDD/F isotope-dilution standards, removing the spiking solvent by evaporation with nitrogen, and diluting the sample to 10 mL with hexane. The sample was split as described above, with 1 mL for semivolatile organics determination and 9 mL for PCDD/F determination.

4.6.1.2 Analytical Procedures for Determining Semivolatile Organics

4.6.1.2.1 Polychlorinated Dibenzo(p)dioxins and Polychlorinated Dibenzofurans

Samples designated for PCDD/F analyses were analyzed by HRGC/HRMS according to EPA Method 8290.

Thus, we analyzed a series of samples for the following components:

- 2,3,7,8-TCDF
- 2,3,7,8-TCDD
- 1,2,3,7,8-PeCDF
- 2,3,4,7,8-PeCDF
- 1,2,3,7,8-PeCDD
- 1,2,3,4,7,8-HxCDF
- 1,2,3,6,7,8-HxCDF
- 1,2,3,7,8,9-HxCDF
- 2,3,4,6,7,8-HxCDF
- 1,2,3,4,7,8-HxCDD
- 1,2,3,6,7,8-HxCDD
- 1,2,3,7,8,9-HxCDD
- 1,2,3,4,6,7,8-HpCDF
- 1,2,3,4,7,8,9-HpCDF
- 1,2,3,4,6,7,8-HpCDD
- OCDF
- OCDD

The samples were also analyzed for total TCDFs, total TCDDs, total PeCDFs, total PeCDDs, total HxCDFs, total HxCDDs, total HpCDFs, and total HpCDDs. SW846 Method No. 8290 was used except 14 instead of 9 isotopically labeled internal standards, 2 isotopically labeled recovery standards, and 1 isotopically labeled cleanup standard were used.

Five-point calibration curves were generated for the components. The calibration curves for 2,3,7,8-TCDF and 2,3,7,8-TCDD cover the range from 0.02 to 4 ng; the curves for the 2,3,7,8-PeCDFs, 2,3,7,8-PeCDDs, 2,3,7,8- HxCDFs, 2,3,7,8-HxCDDs, 2,3,7,8-HpCDFs, and 2,3,7,8-HpCDDs extend from 0.10 to 20 ng; and the curves for OCDF and OCDD extend from 0.2 to 40 ng in 20 μL of solution.

The GC/MS analysis conditions are given below:

Instrument: VG 70S GC/MS equipped with HP5890 GC
Column: J&W DB-5, 60 m x 0.32-mm i.d., 0.25-μm film
Column Temp: 100 °C hold 2 min, then ramp up to 180 °C at
20 °C/min, hold 1 min, then ramp to 220 °C at
5 °C/min, hold 14 min, then ramp to 300 °C at
5 °C/min, hold 7 min
Carrier Flow: He at 1.5 mL/min
Injector Temp: 275 °C
Interface Temp: 300 °C
Injection Volume: 2 μL
Data System: VG 11/250J

4.6.1.2.2 Base-Neutral-Acid Analysis

The MM5 samples, as well as the process-liquid, fuel-oil, and refractory-salt samples, were analyzed for base-neutral-acid compounds. The fuel-oil samples were diluted before analysis because of the high levels of semivolatile compounds that occurred naturally in the fuel oil and that interfered with the analysis. Internal standards were added immediately before analysis by GC/MS. The GC/MS conditions are given below:

Instrument: HP 5971 GC/MS equipped with HP 5890 GC
Column: HP-5, 30 m x 0.32-mm i.d., 0.32-μm film
Column Temp: 40 °C hold 3 min, then ramp to 300 °C at
8 °C/min, then hold
Carrier flow: He at 1 mL/min
Injector Temp: 290 °C
Interface Temp: 260 °C
Injection Volume: 1 μL
Data System: HP DOS

4.6.2 Volatile Organics Analysis

Stack gases were analyzed for VOAs by SW846 Methods 5040 and 8240 with VOST sampling and GC/MS analysis. Liquid-incinerator residues were analyzed for VOAs by SW846 Method 8240. All analyses were by GC/MS.

4.6.2.1 VOST Analysis

VOST tubes were analyzed for volatile organics by SW846 Method 5040 with VOST sampling, and VOST condensates were analyzed by SW846 Method 8240. The analysis conditions are given below.

VOST tubes were prepared by packing the tubes with clean Tenax-GC and charcoal. The sorbents were treated for extraction of their impurities with ethanol and dried with a gentle flow of pure nitrogen. The packed tubes were conditioned at 180 °C for a minimum of 12 hr with pure nitrogen flowing through them. One set of tubes from each batch was then analyzed to confirm that no contaminants were present. The tubes were sealed and stored at 4 °C or below until use.

Internal standards and surrogates were added to all samples immediately prior to analysis by GC/MS. The volatile internal standards were bromochloromethane, 1,4-difluorobenzene, and chlorobenzene-d_5; each was added

in the amount of 0.25 μg to both VOST tubes and condensate samples. Volatile surrogates were toluene-d_8, 1,2-dichloroethane-d_4, and bromofluorobenzene (BFB); they were each added in the amount of 0.25 μg. Although BFB was added to VOST samples, the high boiling point of this compound makes it a poor choice as a surrogate for VOST analysis.

The GC/MS analysis conditions are listed below:

Purge and Trap: Tekmar LSC-2, Trap-Tenax-GC/Silica gel
Purge: 11 min
Desorb Temperature: 200 °C
Desorb Time: 4 min
GC: HP 5840
Column: 6 ft x 2-mm-i.d. SP 1000 on Carbopak B
Program: 4 °C hold 4 min, then ramp to 220 °C at 8 °C/min.
MS: HP 5985
Scan: 35 to 260 amu at 3 s/scan
Source Temperature: 200 °C
Interface: Jet Separator, 250 °C

4.6.2.2 VOA Analysis

The analyses of the process samples for volatile organics was completed by RECRA Environmental, Inc. (Amherst, New York). RECRA is a current EPA CLP Lab, and they used Method 8240. Their instrument was a Finnigan Incos 50 mass spectrometer equipped with a Hewlett-Packard 5890 GC and a Tekmar 2000 purge and trap with a Tekmar 2016 autosampler.

4.6.3 Anions Analysis

The M5AT samples were analyzed for chloride and fluoride. The process samples were analyzed for fluoride and phosphate. Fluoride from the M5AT was analyzed by ion-selective electrode and all other anions were determined by ion chromatography.

The ion-chromatographic conditions are listed below:

Instrument: Dionex 2000i/SP with conductivity detection
Column: Ion Pac AS-4A
Eluent: 0.75 mM sodium bicarbonate/2.0 mM sodium carbonate
Flow Rate: 2.0 mL/min
Injection Volume: 100 μL

4.6.4 Metals Analysis

The MMT and TCLP metals other than mercury were determined by inductively coupled plasma atomic-emission spectrometry (ICP) according to SW846 Method No. 6010. These analyses were performed on a Perkin-Elmer Plasma 40 Emission Spectrometer. Samples were prepared for analysis as set forth in SW846 Method No. 3010, which involves acid digestion. The ICP wavelengths that were used

No. 3010, which involves acid digestion. The ICP wavelengths that were used are listed below.

Metal	Wavelength, nm
Arsenic	193.696
Selenium	196.026
Chromium	205.552
Antimony	206.833
Zinc	213.856
Cadmium	214.438
Phosphorus	214.914
Lead	220.353
Nickel	231.604
Barium	233.527
Boron	249.773
Manganese	257.610
Vanadium	292.402
Beryllium	313.042
Silver	328.068
Thallium	276.8

Mercury was determined in TCLP and MMT samples by cold-vapor atomic-absorption spectrometry at 253.7 nm (SW-846 Method No. 7470) with an Instrumentation Laboratory Model IL551 AA/AE Spectrometer equipped with a Model 440 Atomic Vapor assembly.

4.6.5 pH Measurements

The pH levels of the liquid-process samples were measured prior to the analyses of these samples for other parameters. The pH values were determined by combination glass electrode (with internal reference electrode) according to SW-846 Method 9040.

4.6.6 Particulates

Particulates were quantified in the acetone-probe rinse and in the filter from the MMT. These samples were dried to a constant weight in a desiccator and weighed with an analytical balance.

5. TEST RESULTS

5.1 Introduction

The test results for the LIC trial burn describe the LIC process characteristics, the furnace-operating parameters, the nature of the LIC stack emissions, and the chemical content of the incinerator residues. These results allow the calculation of such RCRA-required parameters as the DRE for the POHC, the GB concentrations in the stack, the combustion efficiencies, the particulate emissions, the HCl emissions, the steady-state furnace-operating temperatures, the CO concentrations in the stack, and the concentrations of certain metals in the process residues. Additionally, data are available from the monitoring of stack emissions for O_2, CO_2, PICs, PCDD/F, and metals and from the analysis of incinerator-process samples (process water, scrubber liquor, scrubber brine, caustic, and refractory salt) for PICs, PCDD/F, F^-, PO_4^{-3}, and pH.

5.2 Process Data

5.2.1 Process Data Aquisition and Recording

Process conditions for the three trial burn runs are summarized in Tables 5-1 and 5-2. The data represent averages over the time spans of the runs and were compiled from PDAR (Process Data Acquisition and Recording) system records and manual stack-sampling logs. The available data indicate that the required temperature conditions, as specified in the RCRA permit application, were maintained throughout the runs. The CO concentration data in the PDAR log were not the raw measurements but were, instead, the values that were obtained after correction of the measurements to an O_2 concentration of 7%. Figures 5-1, 5-2, and 5-3 provide graphic illustrations of the fuel-flow rates and sampling periods during the test to show that sampling occured during times when the LIC was at a steady state.

TABLE 5-1. LIC PDAR DATA

	Trial Burn 1			Trial Burn 2			Trial Burn 3		
	Min.	Max.	Average	Min.	Max.	Average	Min.	Max.	Average
Agent flow, lb/hr	741	759	750	715	799	750	726	766	750
Pri. comb, air flow, kscfh	137	139	138	137.1	137.7	137.4	134.1	137.7	136
Pri. comb, fuel flow, gph	34.9	37.8	36.0	34.6	38.3	36.0	34.6	38.3	36.0
Pri. exhaust temp., °F	2696	2705	2701	2696	2712	2701	2487	2709	2699
Pri. exhaust O_2, %	- - Not in service[a] - - - - - -			- - Not in service- - - - - - - -			- - Not in service - -		
Sec. comb, air flow, kscfh	18.9	21.4	19.9	19.1	22.3	21.0	19.0	24.1	21.9
Sec. comb, fuel flow, gph	11.3	13.4	12.4	11.8	13.9	13.0	11.8	15.1	13.6
Decon flow, gpm[b]	1.32	3.48	3.30	1.49	3.51	3.29	1.64	3.43	3.29
Sec. exhaust O_2, %	6.3	11.8	6.61	5.5	15.6	6.4	0	14.1	6.4
Sec. exhaust CO, ppm	11	66	18.7	5	24	11.2	9	33	14.8
Sec. exhaust temp., °F	1994	2066	2001	1992	2072	2000	1837	2073	1998
Vent air temp., °F	124	127	125	122	125	124	122	125	124
Quench inlet temp., °F	801	813	808	804	817	811	809	880	815
Quench spray rate, gpm	65	68	66.2	68	71	68.7	67	71	68.5
Quench exit temp., °F	171	187	184	178	182	180	178	183	181
Brine pH	8.1	10.3	9.27	7.8	10.4	9.25	7.9	9.6	9.27
Venturi brine flow, gpm	156	176	170	156	177	170	153	177	168
Venturi dp, in. w.c.	26.7	36.5	31.9	28	37.3	32.0	26.5	36.9	32.0
Brine density, lb/cf	62.5	62.8	62.6	62.3	62.8	62.5	62.7	62.9	62.8
Liquor pH	8.1	11.2	9.55	7.8	10.8	9.34	7.6	11.1	9.28
Scrubber dp, in. w.c.	3.7	4.6	4.2	3.7	4.8	4.2	3.5	4.4	4.1
Scrubber liq. flow, gpm	577	620	599	578	618	599	578	618	599
Entrainment sep. dp, in. w.c.	0.1	0.2	0.13	0.2	0.2	0.2	0.2	0.2	0.2
Liquor density, lb/cf	60	60	60	60	60	60	60	60	60
Demister dp, in. w.c.	8.6	9.3	9.0	8.4	9.5	9.0	8.7	9.3	9.0
Fan amps	35	38	36	34	38	36.3	23	38	35.9
Stack CO, ppm	13	33	18.8	20	62	26	0	63	18
Stack O_2, %	13.9	17.3	14.1	13.9	18.2	14.1	13.9	18.2	14.1
Agent Concentration, GB	ND[c]	ND	ND	ND	ND	ND	ND	ND	ND

[a]This is a noncritical item.
[b]Decon in these tests was only water.
[c]ND indicates less than 0.0003 mg^3/m^3

TABLE 5-2. PROCESS DATA FROM MANUAL STACK SAMPLING

	BURN No.		
	LIC 1	LIC 2	LIC 3
Gas flow, acfm	13900	13500	12500
Gas temperature, °F	198	196	197
Percent moisture	38.2	38.5	38.2
Percent O_2 (dry)	14.6	14.4	14.6
Percent CO_2 (dry)	4.5	4.6	4.5
Total gas flow, lb/hr	43500	42600	40200
Dry gas flow, lb/hr	31500	30800	29100

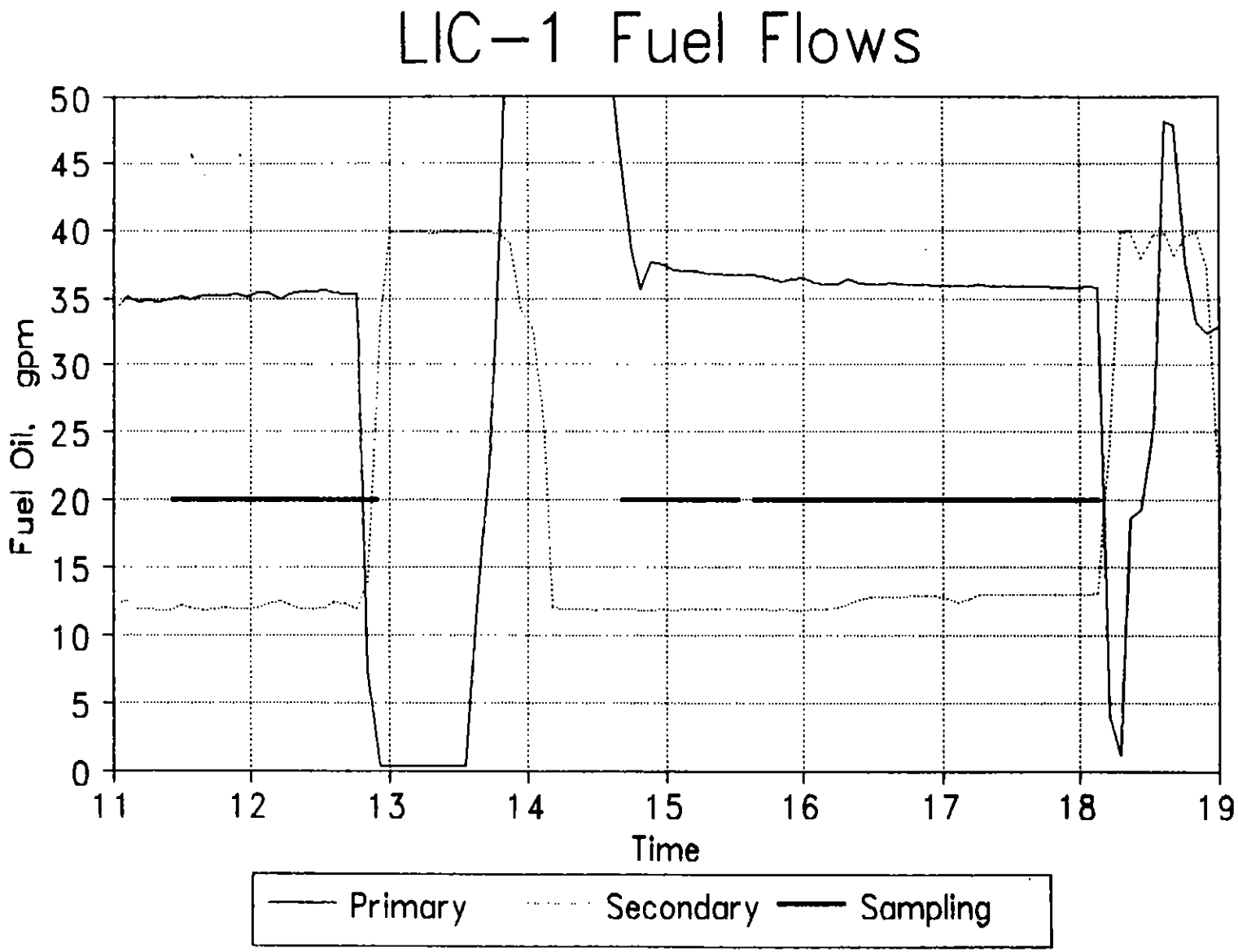

FIGURE 5-1 LIC-1 FUEL FLOWS

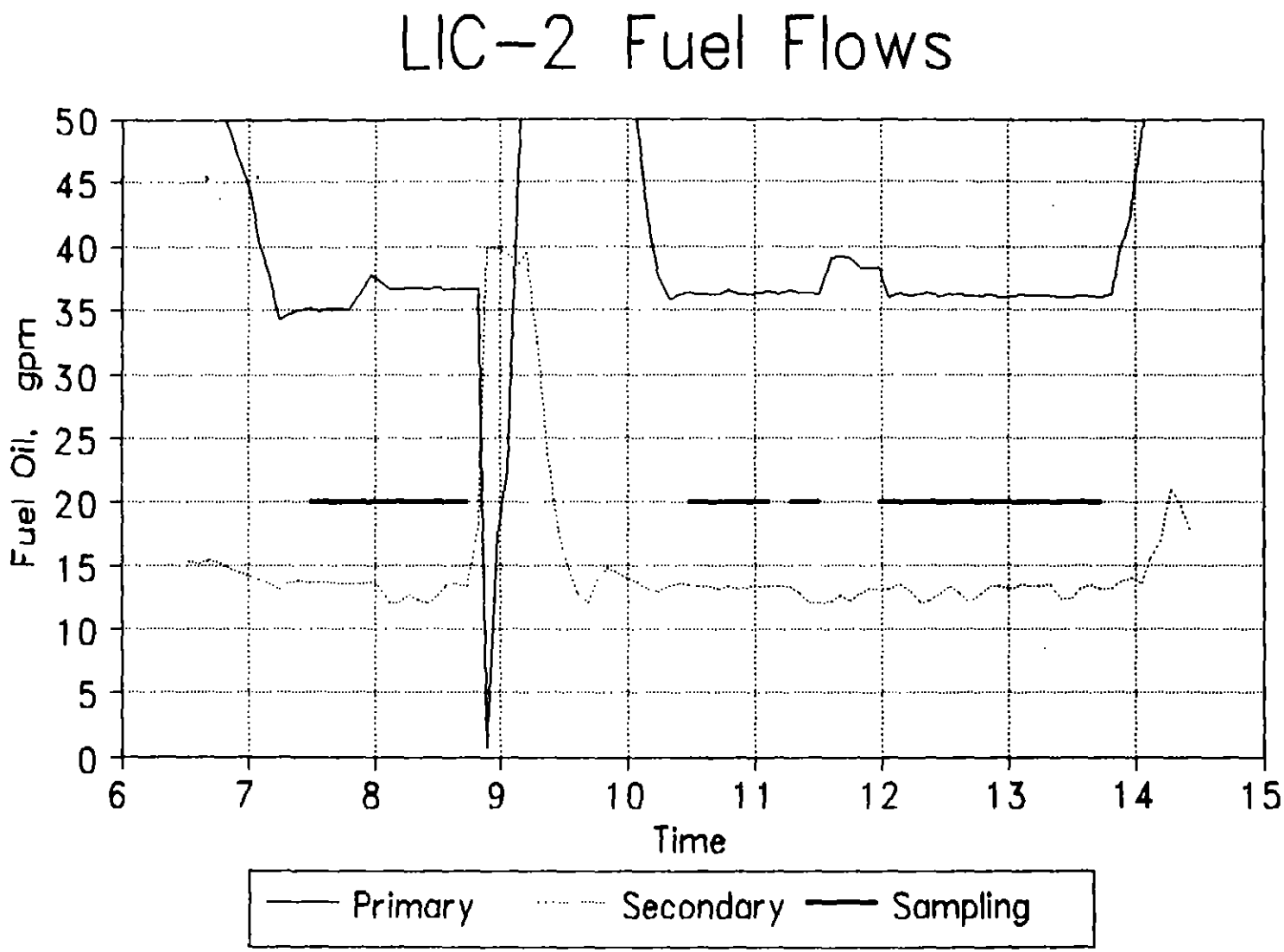

FIGURE 5-2 LIC-2 FUEL FLOWS

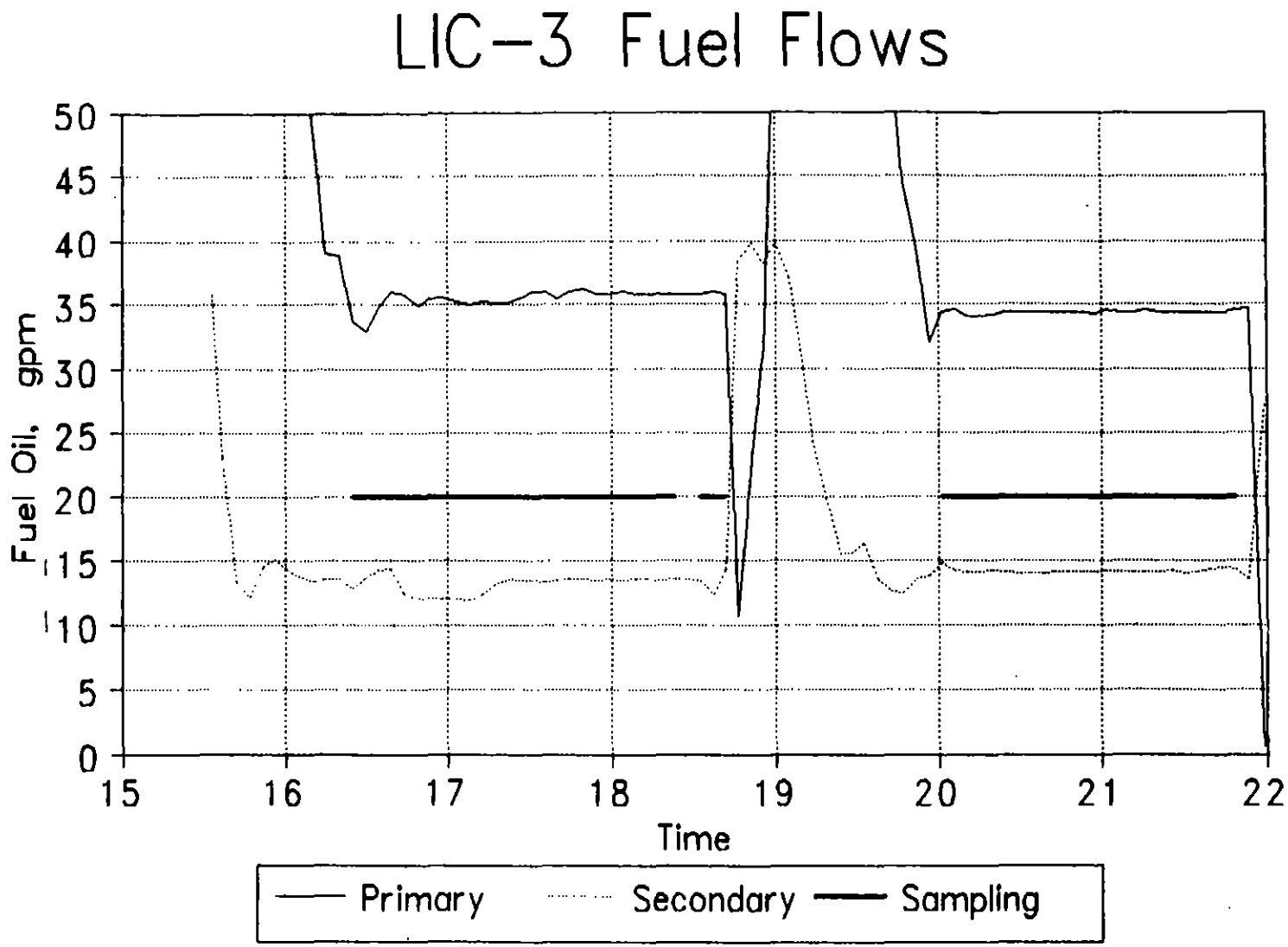

FIGURE 5-3 LIC-3 FUEL FLOWS

5.2.2 Orsat

Orsat data are presented in Table 5-3 from which the CO and CO_2 values were used to calculate combustion efficiency. Combustion efficiencies calculated from hourly average CO and CO_2 concentrations are given in Table 5-4. The CO and CO_2 data show that the required combustion efficiency was obtained throughout the runs.

5.2.3 Chemical Agent

The concentration of agent GB in the stack gas was measured by ACAMS and found to be less than 0.0003 mg/m^3 at all times during the three runs. In addition, all process samples were certified to contain less than 20 ppb of GB.

TABLE 5-3. INTREGATED ORSAT DATA

Date	Time	Carbon Dioxide (% Vol.)	Oxygen (% Vol.)	Carbon Monoxide (% Vol.)	Nitrogen (% Vol.)
12/5/90	1131 - 1231	4.3	14.7	0.0	81.0
LIC-1	1231 - 1529	4.4	14.6	0.0	81.0
	1537 - 1637	4.6	14.4	0.0	81.0
	1637 - 1737	4.4	14.6	0.0	81.0
12/6/90	0726 - 0826	4.6	14.4	0.0	81.0
LIC-2	0826 - 1108	4.6	14.4	0.0	81.0
	1115 - 1245	4.6	14.4	0.0	81.0
	1245 - 1345	4.6	14.4	0.0	81.0
12/6/90	1625 - 1725	4.5	14.5	0.0	81.0
LIC-3	1725 - 1825	4.3	14.7	0.0	81.0
	1829 - 2050	4.5	14.5	0.0	81.0
	2050 - 2150	4.5	14.5	0.0	81.0

TABLE 5-4. COMBUSTION EFFICIENCY RESULTS

Date	Test Hour	CO ppm	CO_2 ppm	COMB. EFF[a] %
10/5/90	1	18.5	43000	99.96
LIC-1	2	18.6	44000	99.96
	3	17.8	46000	99.96
	4	16.8	44000	99.96
10/6/90	1	25.4	46000	99.94
LIC-2	2	26.8	46000	99.94
	3	27.2	46000	99.94
	4	26.2	46000	99.94
10/6/90	1	23.2	45000	99.95
LIC-3	2	23.7	43000	99.94
	3	19.0	45000	99.96
	4	6.5	45000	99.99

[a]Comb. Eff = $\frac{[CO_2] - [CO]}{[CO_2]} \times 100\%$

5.3 Test Occurences

Preheating of the LIC system was accomplished by burning JP5. Once the gas and wall temperatures of the incineration chamber had stabilized at the appropriate values, the agent-feed process commenced. The agent-feed rate was then slowly increased to the rate chosen for the trial burns, 750 lb/hr. When the 750-lb/hr feed rate was reached, an additional 10- to 15-min stabilization time was allowed, after which sampling began. No liquid decontaminant was fed to the incinerator during these burns.

5.3.1 First Trial Burn

For the first trial burn, sampling began at 1131 hours on 12/5/90 and proceeded until 1247 hours, when a flame-failure sensor problem in the primary chamber resulted in an agent-feed shutdown. The sample trains were removed and plugged after 0.5 hr of downtime. The trains were then leak-checked prior to restart. The primary chamber was refired at 1325 hours, agent feed recommenced at 1418 hours, and sampling was restarted at 1447 hours. After the restart, the burn proceeded with no further difficulties of this nature.

Early in the burn, the probe for the oxygen analyzer that monitored the primary-chamber exhaust gas failed. EPA observers concurred that this failure (and the concomitant loss of the primary exhaust oxygen data) was not sufficient cause to stop the trial burn. Indeed, the analyzer remained out of service through the remaining two trial burns. Pretest process samples for the first trial burn were collected between 1110 and 1130 hours, and post-test samples were collected between 1800 and 1830 hours.

5.3.2 Second Trial Burn

Sampling for the second trial burn began at 0726 hours on 12/6/90 and proceeded until 0846 hours, when plugging of the oxygen-analyzer probe for the secondary-chamber exhaust gas, along with a malfunction in a stack ACAMS unit, resulted in a shutdown of the agent feed. The agent feed was restarted at 0942 hours and sampling was resumed at 1028 hours. During this interruption, the sample trains were removed and plugged after 1/2 hour of downtime and were leak-checked prior to restart. At 1129 hours, a malfunction in a furnace-room ACAMS unit resulted in a short-term reduction of the agent-feed rate, during which sampling was again suspended. Normal operations resumed at 1200 hours and the burn was completed with no further incidents. Sampling ended at 1345 hours. Pretest process samples were collected between 0700 and 0726 hours; post-test samples were collected between 1400 and 1430 hours.

5.3.3 Third Trial Burn

Agent feeding for the third trial burn began at 1546 hours, and sampling commenced at 1625 hours, on 12/6/90. A primary-chamber flame-failure sensor problem occurred at 1839 hours, resulting in a shutdown of the agent-feed process. Agent feeding resumed at 1924 hours, and sampling resumed at 2000 hours. The sample trains were removed and plugged after 1/2 hour of downtime and were leak-checked prior to restart. Sampling was completed at 2150 hours with no further incidents having taken place. Pretest process samples were collected between 1615 and 1625 hours. Post-test samples were collected between 2150 and 2230 hours. After all three runs had been completed and the LIC had cooled, a refractory salt sample was obtained from the incinerator on December 13, 1990.

5.3.4 Summary of Test Occurrences

The nominal feed rate established for this test was 750 lb/hr, which was the highest rate at which stable combustion conditions could be maintained. A flame-failure sensor reading resulted in a feed shutdown during the first burn, which halted sampling for the maximum allowable time of 2 hr. But sampling was resumed before the downtime limit was exceeded. During the second burn, a stack ACAMS malfunction and a subsequent furnace-room ACAMS malfunction resulted in two agent-feed stoppages. The accumulated downtime from the two stoppages was less than the 2-hr allowable limit. During the third burn, a primary chamber flame-failure sensor problem caused an agent-feed shutdown, but the duration of the sampling downtime was well under the 2-hr limit. Since the samples were obtained without exceeding the limits for interruptions that were specified in the test plan, the validity of the samples was endorsed by the EPA observers and by other test participants for the purpose of meeting RCRA requirements.

5.4 Categories of Analytical Data

The analytical data for the LIC trial burns are tabulated in this section according to type of analysis as follows:

The results of the determinations of semivolatile organic compounds include those from the analysis of both MM5 samples and process samples for PCDD/F and for other semivolatile organic compounds.

The results of the determinations of volatile organic compounds were obtained from the analyses of both VOST tubes and liquid process samples.

The results of the anion determinations include HCl and HF concentrations that were measured in the stack with the M5AT, as well as F^- and PO_4^{-3} concentrations in the process samples (liquid and salt).

The data from the determinations of metals include the results for 17 elements in the stack (from the MMT) and for 8 elements in the process samples (liquid and salt).

The pH measurements were obtained only for the liquid process samples.

Measurements of particulate mass were made on samples from the MMT.

5.4.1 Results from the Determinations of Semivolatile Organics

The conditions that prevailed during the collection of samples in the MM5 sampling train are delineated in Table 5-5. The table gives details of the train operating parameters and leak checks.

TABLE 5-5. DETAILS OF MM5 SAMPLING

Parameter	Units	Run 1	Run 2	Run 3
Date	--	12/5/90	12/6/90	12/6/90
Sample Time	minutes	240	240	240
Sample Volume	dscf	127.96	124.84	134.43
Stack Gas Flow Rate	dscf/hr	443000	426000	442000
Stack Gas Temperature	°F	194	198	198
Percent Isokinetic		94.4	95.6	98.9
Stack Gas Moisture	%	37.7	37.2	36.8
Oxygen Conc.	%	14.6	14.4	14.6
CO_2 Conc.	%	4.4	4.6	4.5
Leak Checks:				
Pitot Pretest		pass	pass	pass
Pitot Post Test		pass	pass	pass
Train Pretest, cfm		0.004 @ 16" Hg	0.005 @ 15" Hg	0.002 @ 15" Hg
Train Post Test, cfm		0.003 @ 20" Hg	0.002 @ 20" Hg	0.005 @ 19" Hg

Table 5-6 summarizes the PCDD/F results. Levels of PCDD/F found in the stack gas were approaching the instrument limit of detection. The incinerator influent for this trial burn contained only trace amounts of chlorinated compounds; hence, the formation of significant amounts of PCDD/Fs in the process was not expected.

TABLE 5-6. PCDD/F DETERMINATION
in MM5 Samples

Sample Description	Sponsor Sample No.	Amount Found, ng Compounds				
		Tetra	Penta	Hexa	Hepta	Octa
Lab Blank (MM5)	--	ND[a]	ND	ND	ND	ND
Blank Train Filter & XAD	3J-1-064, 076	ND	ND	ND	ND	0.23
Field Blank	3J-1-078, 077	ND	ND	ND	0.42	1.6
Sample Train, Trip Blank	3J-2-108	ND	ND	ND	ND	ND
Sample Train-Field Blank, Run 1	3J-1-120	ND	ND	ND	ND	ND
Sample Train-Field Blank, Run 2	3J-2-107	ND	ND	2.2	ND	ND
Sample Train-Field Blank, Run 3	3J-3-093	ND	ND	ND	0.41	1.69
Sample Train, Run 1	3J-1-109, 119	0.30	ND	ND	ND	0.27
Sample Train, Run 2	3J-2-096, 106	0.067	ND	ND	ND	ND
Sample Train, Run 3	3J-3-082, 092	0.081	ND	ND	ND	0.38

[a]ND = Not detected. Detection Limits:

TCDD/F	0.02 ng
PCDD/F	0.1 ng
HxCDD/F	0.1 ng
HpCDD/F	0.1 ng
OCDD/F	0.2 ng

Table 5-7 summarizes the results of the determinations of the other semivolatile compounds. Low levels of 2-methylphenol, 3-methylphenol, and 4-methylphenol were found in MM5 samples from each of the three runs. However, these compounds were also present in the blank train and in field blanks. In addition, all of the sample-train extracts, including those from the blank sample train, contained one or more phthalate esters. Phthalate esters are used as plasticizers and are found in almost all types of samples at various levels. Appendix D gives data sheets from the GC/MS analyses that were performed for determining the PCDD/Fs and other semivolatile analytes.

TABLE 5-7. MODIFIED METHOD 5 SEMIVOLATILE RESULTS SUMMARY

Run #	Sample ID	Sample No.	Compounds	Amount µg
Blank	Lab blank	--	2-Methylphenol	140
			Di-n-octylphthalate	11
			4-Nitrophenol	39
	Trip blank	3J-1-74, 75, 77, 78, 79	2-Methylphenol	130
			4-Methylphenol	91
			3-Methylphenol	27
	Blank Train	3J-1-64 through 71	2-Methylphenol	230
			4-Methylphenol	120
			Benzoic acid	34
			3-Methylphenol	33
			Diethylphthalate	14
			bis(2-Ethylhexyl)phthalate	15
1	Field blank	3J-1-117, 118, 120, 121	Benzyl alcohol	72
			4-Methylphenol	97
			2-Methylnaphthalene	11
			Di-n-octylphthalate	22
	Sample Train #1	3J-1-119 and 3J-1-109 through 116	2-Methylphenol	450
			4-Methylphenol	210
			Dimethylphthalate	26
			3-Methylphenol	36
			Diethylphthalate	85
			Di-n-butylphthalate	18
			Di-n-octylphthalate	100

(continued)

TABLE 5-7. (continued)

Run #	Sample ID	Sample No.	Compounds	Amount µg
2	Trip blank	3J-2-108	Benzyl alcohol	300
			2-Methylphenol	36
			3-Methylphenol	31
	Field blank	3J-2-104, 105, 107	2-Methylphenol	75
			4-Methylphenol	53
			3-Methylphenol	19
	Sample Train #2	3J-2-106 and 3J-2-96 through 103	2-Methylphenol	330
			4-Methylphenol	140
			3-Methylphenol	23
			Dimethylphthalate	74
			Diethylphthalate	34
			Di-n-butylphthalate	13
			bis(2-Ethylhexyl)phthalate	43
3	Field blank	3J-3-90, 91, 93	2-Methylphenol	160
			4-Methylphenol	39
			3-Methylphenol	14
	Sample Train #3	3J-3-92 and 3J-3-82 through 89	2-Methylphenol	290
			Dimethylphthalate	64
			Diethylphthalate	110
			Di-n-butylphthalate	21
			bis(2-Ethylhexyl)phthalate	45

The samples of process liquids (water, liquor, brine, and caustic), fuel oil, and refractory salt were analyzed for PCDD/Fs. Tables 5-8, 5-9, 5-10, 5-11, 5-12, and 5-13 give the results of these analyses. The only PCDD/Fs that were detected were small amounts of OCDD and certain related compounds in several of the samples. The tabulated results have been converted to the corresponding 2,3,7,8-tetrachlodibenzo-p-dioxin toxicity-equivalence (TE) values. TE is the concentration of 2,3,7,8-TCDD that yields the same toxicity as the mixture of PCDD/Fs that were found in the samples. The TE can be calculated as:

TE = 1.00 [2,3,7,8-TCDD] + 0.10 [2,3,7,8-TCDF] + 0.5 ([1,2,3,7,8-PeCDD] + [2,3,4,7,8-PeCDD]) + 0.05 [1,2,3,7,8-PeCDF] + 0.1 ([1,2,3,4,7,8-HxCDD] + [1,2,3,6,7,8-HxCDD] + [1,2,3,7,8,9-HxCDD] + [1,2,3,4,7,8-HxCDF] + [1,2,3,6,7,8-HxCDF] + [2,3,4,6,7,8-HxCDF]) + 0.01 ([1,2,3,4,6,7,8-HpCDD] + [1,2,3,4,6,7,8-HpCDF] + [1,2,3,4,7,8,9-HpCDF]) + 0.001 ([OCDD]+[OCDF])

The factors used to calculate TE were taken from "Update of Toxicity Equivalency Factors (TEFs) for Estimating Risks Associated with Exposures to Mixtures of Chlorinated Dibenzo-p-Dioxins and Dibenzofurans (CDDs/CDFs)," March 1989, (EPA 625/3-89/-16). Guidance from EPA indicates that only actual values, and not detection limits, should be used in a TE calculation. Consequently, no TE results are reported for samples with no detected PCDD/Fs. Even in the samples that contained PCDD/Fs, the levels of such substances were close to the detection limits.

TABLE 5-8. PCDD/F DETERMINATION
Fuel Oil

Sample Description	Sample	Concentration, ng/L Compounds					2,3,7,8-TCDD Toxicity Equivalent
		Tetra	Penta	Hexa	Hepta	Octa	
Lab Blank	--	ND[a]	ND	ND	ND	ND	NR[b]
Pretest, Run 1	3J-1-001	ND	ND	ND	ND	ND	NR
Post Test, Run 1	3J-1-022	ND	ND	ND	ND	ND	NR
Pretest, Run 2	3J-2-001	ND	ND	ND	ND	ND	NR
Post Test, Run 2	3J-2-022	ND	ND	ND	ND	ND	NR
Pretest, Run 3	3J-3-001	ND	ND	ND	ND	ND	NR
Post Test, Run 3	3J-3-022	ND	ND	ND	ND	ND	NR

[a]ND = Not Detected. Detection Limits:

Tetra	10 ng/L
Penta	50 ng/L
Hexa	50 ng/L
Hepta	50 ng/L
Octa	100 ng/L

[b]NR = Not reported, no value can be calculated.

TABLE 5-9. PCDD/F DETERMINATION
Caustic

Sample Description	Sample	Concentration, ng/L Compounds					2,3,7,8-TCDD Toxicity Equivalent
		Tetra	Penta	Hexa	Hepta	Octa	
Lab Blank	--	ND[a]	ND	ND	ND	ND	NR[b]
Pretest, Run 1	3J-1-011	ND	ND	ND	ND	ND	NR
Post Test, Run 1	3J-1-032	ND	ND	ND	ND	ND	NR
Pretest, Run 2	3J-2-011	ND	ND	ND	ND	ND	NR
Post Test, Run 2	3J-2-032	ND	ND	ND	ND	ND	NR
Pretest, Run 3	3J-3-011	ND	ND	ND	ND	0.44	0.00044
Post Test, Run 3	3J-3-034	ND	ND	ND	ND	ND	NR

[a]ND = Not Detected. Detection Limits:

Tetra	0.04 ng/L
Penta	0.20 ng/L
Hexa	0.20 ng/L
Hepta	0.20 ng/L
Octa	0.40 ng.L

[b]NR = Not reported, no value can be calculated.

TABLE 5-10. PCDD/F DETERMINATION
Scrubber Liquor

Sample Description	Sample	Concentration, ng/L Compounds					2,3,7,8-TCDD Toxicity Equivalent
		Tetra	Penta	Hexa	Hepta	Octa	
Lab Blank	--	ND[a]	ND	ND	ND	ND	NR[b]
Lab Blank (for 3J-2-025)	--	ND	ND	ND	ND	ND	NR
Pretest, Run 1	3J-1-002	ND	ND	ND	ND	ND	NR
Post Test, Run 1	3J-1-023	ND	ND	ND	ND	ND	NR
Pretest, Run 2	3J-2-002	ND	ND	ND	ND	ND	NR
Post Test, Run 2	3J-2-025	ND	ND	ND	ND	ND	NR
Pretest, Run 3	3J-3-002	ND	ND	ND	ND	1.6	0.0016
Post Test, Run 3	3J-3-025	ND	ND	ND	ND	ND	NR

[a]ND = Not Detected. Detection Limits:

Tetra	0.04 ng/L
Penta	0.20 ng/L
Hexa	0.20 ng/L
Hepta	0.20 ng/L
Octa	0.40 ng/L

[b]NR = Not reported, no value can be calculated.

TABLE 5-11. PCDD/F DETERMINATION
Scrubber Brine

Sample Description	Sample	Concentration, ng/L Compounds					2,3,7,8-TCDD Toxicity Equivalent
		Tetra	Penta	Hexa	Hepta	Octa	
Lab Blank	--	ND[a]	ND	ND	ND	ND	NR[b]
Pretest, Run 1	3J-1-005	ND	ND	ND	ND	ND	NR
Post Test, Run 1	3J-1-026	ND	ND	ND	ND	ND	NR
Pretest, Run 2	3J-2-005	ND	ND	ND	ND	ND	NR
Post Test, Run 2	3J-2-026	ND	ND	ND	ND	ND	NR
Pretest, Run 3	3J-3-005	ND	ND	ND	ND	ND	NR
Post Test, Run 3	3J-3-026	ND	ND	ND	ND	ND	NR

[a]ND = Not Detected. Detection Limits:
Tetra 0.04 ng/L
Penta 0.20 ng/L
Hexa 0.20 ng/L
Hepta 0.20 ng/L
Octa 0.40 ng/L
[b]NR = Not reported, no value can be calculated.

TABLE 5-12. PCDD/F DETERMINATION
Process Water

Sample Description	Sample	Concentration, ng/L Compounds					2,3,7,8-TCDD Toxicity Equivalent
		Tetra	Penta	Hexa	Hepta	Octa	
Lab Blank	--	ND[a]	ND	ND	ND	ND	NR[b]
Pretest, Run 1	3J-1-008	ND	ND	ND	ND	ND	NR
Post Test, Run 1	3J-1-029	ND	ND	ND	ND	ND	NR
Pretest, Run 2	3J-2-009	ND	ND	ND	ND	0.26	0.00026
Post Test, Run 2	3J-2-029	ND	ND	ND	ND	ND	NR
Pretest, Run 3	3J-3-008	ND	ND	ND	ND	0.70	0.00070
Post Test, Run 3	3J-3-029	ND	ND	ND	ND	0.55	0.00055

[a]ND = Not detected. Detection Limits:

Tetra	0.04 ng/L
Penta	0.20 ng/L
Hexa	0.20 ng/L
Hepta	0.20 ng/L
Octa	0.40 ng/L

[b]NR = Not reported, no value can be calculated.

TABLE 5-13. PCDD/F DETERMINATION
Refractory Salt

Sample Description	Sample	Concentration, ng/kg Compounds					2,3,7,8-TCDD Toxicity Equivalent
		Tetra	Penta	Hexa	Hepta	Octa	
Lab Blank	--	NR[a]	NR	NR	NR	NR	NR
Refractory Salt	3J-Salt	ND[b]	ND	12	21	26	1.4

[a]NR - Not reported. Extremely low recoveries of isotopically labeled surrogates were found. No PCDD/F were found.

[b]ND - Not detected. Detection Limits:

Tetra	2 ng/kg
Penta	10 ng/kg
Hexa	10 ng/kg
Hepta	10 ng/kg
Octa	20 ng/kg

Tables 5-14, 5-15, and 5-16 summarize the results of the analyses of these media for the semivolatile compounds in the three runs, and the corresponding results from the laboratory blanks are listed in Table 5-15. Low levels of the plasticizers di-n-octylphthalate and bis-(2-ethylhexyl)phthalate were present in some of the samples of scrubber liquor, scrubber brine, and process water, but they were also present in the lab blanks. In addition, 4-chloro-3-methylphenol was present in the Run 1 scrubber-brine pretest sample. Furthermore, all of the fuel-oil samples contained significant amounts of naphthalene and 2-methylnaphthalene, but these compounds are common constituents of JP-5.

TABLE 5-14. SEMIVOLATILE RESULTS SUMMARY
RUN 1

Sample ID	Sample No.	Compound	Concentration µg/L
Scrubber brine pretest	3J-1-005	4-Chloro-3-methylphenol	15.6
Scrubber brine post-test	3J-1-026	bis(2-Ethylhexyl)phthalate	14.6
		Di-n-octylphthalate	11.2
Scrubber liquor pretest	3J-1-002	bis(2-Ethylhexyl)phthalate	10.6
		Di-n-octylphthalate[a]	18.4
Scrubber liquor post-test	3J-1-023	Di-n-octylphthalate[a]	10.2
Process water pretest	3J-1-008	--	
Process water post-test	3J-1-029	--	
Caustic pretest	3J-1-011	--	
Caustic post-test	3J-1-032	--	
Fuel oil pretest	3J-1-001	Naphthalene	12800
		2-Methylnaphthalene	25300
Fuel oil post-test	3J-1-022	Naphthalene	11800
		2-Methylnaphthalene	22700

[a]Compound also in the blank.

TABLE 5-15. SEMIVOLATILE RESULTS SUMMARY
RUN 2

Sample ID	Sample No.	Compound	Concentration µg/L
Scrubber brine pretest	3J-2-005	--	
Scrubber brine post-test	3J-2-026	--	
Scrubber liquor pretest	3J-2-002	--	
Scrubber liquor post-test	3J-2-023	Di-n-octylphthalate	14.0
Process water pretest	3J-2-009	--	
Process water post-test	3J-2-029	--	
Caustic pretest	3J-2-011	--	
Caustic post-test	3J-2-032	--	
Fuel oil pretest	3J-2-001	Naphthalene	12500
		2-Methylnaphthalene	24200
Fuel oil post-test	3J-2-022	Naphthalene	12100
		2-Methylnaphthalene	22500

TABLE 5-16. SEMIVOLATILE RESULTS SUMMARY
RUN 3

Sample ID	Sample No.	Compound	Concentration µg/L
Scrubber brine pretest	3J-3-005	--	
Scrubber brine post-test	3J-3-026	--	
Scrubber liquor pretest	3J-3-002	--	
Scrubber liquor post-test	3J-3-025	--	
Process water pretest	3J-3-008	Di-n-octylphthalate[a]	19.4
Process water post-test	3J-3-029	Di-n-octylphthalate[a]	12.6
Caustic pretest	3J-3-011	--	
Caustic post-test	3J-3-034	--	
Fuel oil pretest	3J-3-001	Naphthalene 2-Methylnaphthalene	13100 26400
Fuel oil post-test	3J-3-022	Naphthalene 2-Methylnaphthalene	12800 28000
Lab Blank (Scrubber liquor)		Di-n-octylphthalate	15.0
Lab Blank (Process water)		bis(2-Ethylhexyl)phthalate	10.9
Lab Blank (Caustic)		--	--
Lab Blank (Scrubber brine)		--	--

[a]Compound also in the blank.

5.4.2 Results from the Determinations of Volatile Organics

The results of the analyses of VOST samples for volatile organics are summarized in Tables 5-17, 5-18, and 5-19 as total ng collected. All samples contained some methylene chloride and several samples also contained acetone. Both of these compounds are common laboratory solvents; therefore, it is probable that these findings are the result of laboratory contamination. Similarly, most of the Tenax-GC and Tenax-GC/charcoal samples, including the field and trip blanks, contained 2-butanone, which is another common laboratory contaminant.

Twelve of the samples contained chloromethane, six contained bromoform, six contained toluene, and six contained tetrachloroethene. Other compounds that were present in one or more samples included benzene, 4-methyl-2-pentanone, 2-hexanone, 1,1,2,2-tetrachloroethane, styrene, o- and p-xylene, 1,1,1-trichloroethane, 1,2-dichloropropane, cis-1,3-dichloropropene, and vinyl acetate. Benzene and styrene are known Tenax-GC decomposition products. Bromoform is a common trihalomethane found in many water supplies and may be introduced into the incinerator through process-water inputs. In these tests, the amount of VOST condensate collected was 40 mL.

TABLE 5-17. VOST VOLATILE ORGANICS RESULTS SUMMARY
RUN 1

Sample ID	Sample No.	Compound	Amount ng
Condensate Blank	3J-1-108	Methylene Chloride	2920
		Acetone	728
Condensate No. 1	3J-1-104	Methylene Chloride	1820
		Acetone	1050
Condensate No. 2	3J-1-105	Methylene Chloride	11900
		Acetone	3350
		Toluene	448
Condensate No. 3	3J-1-106	Methylene Chloride	4080
Condensate No. 4	3J-1-107	Methylene Chloride	400
		Acetone	552
Field Blank Tenax, Tenax-Charcoal	3J-1-100, 101	Methylene Chloride	69.5
		2-Butanone	65.1
Trip Blank Tenax, Tenax-Charcoal	3J-1-102, 103	Methylene Chloride	102
		Acetone	73.9
		2-Butanone	77.6
Pair No. 1 Tenax, Tenax-Charcoal	3J-1-092, 093	Chloromethane	4860
		Methylene Chloride	104
		Acetone	185
		2-Butanone	791
		Benzene	57.0
		4-Methyl-2-Pentanone	373
		2-Hexanone	282
		Tetrachloroethene	91.5
		1,1,2,2-Tetrachloroethane	78.9
		Styrene	260
		o- and p-Xylene	74.4
Pr. No. 2 Tenax, Tenax-Charcoal	3J-1-094, 095	Chloromethane	9610
		Methylene Chloride	394
		Acetone	407
		2-Butanone	841
		Benzene	3550
		Bromoform	70.2
		Toluene	53.2

(continued)

TABLE 5-17. (continued)

Sample ID	Sample No.	Compound	Amount ng
Pair No. 3 Tenax, Tenax-Charcoal	3J-1-096, 097	Chloromethane	4580
		Methylene Chloride	191
		Acetone	285
		2-Butanone	785
		Bromoform	75.6
		Toluene	53.1
Pair No. 4 Tenax, Tenax-Charcoal	3J-1-098, 099	Chloromethane	13700
		Methylene Chloride	486
		Acetone	226
		2-Butanone	1030
		1,1,1,-Trichloroethane	431
		Bromoform	76.9

TABLE 5-18. VOST VOLATILE ORGANICS RESULTS SUMMARY
RUN 2

Sample ID	Sample No.	Compound	Amount ng
Condensate Blank	3J-2-95	Methylene Chloride	5040
		Acetone	1570
Condensate No. 1	3J-2-91	Methylene Chloride	4520
		Acetone	1230
Condensate No. 2	3J-2-92	Methylene Chloride	3540
		Acetone	2030
Condensate No. 3	3J-2-93	Methylene Chloride	472
		Acetone	504
Condensate No. 4	3J-2-94	Methylene Chloride	4280
		Acetone	1390
Field Blank Tenax, Tenax-Charcoal	3J-2-89, 90	Methylene Chloride	294
		Acetone	220
		Tetrachloroethene	59.6
		Toluene	141
Pair No. 1 Tenax, Tenax-Charcoal	3J-2-81, 82	Chloromethane	4000
		Methylene Chloride	235
		Acetone	698
		2-Butanone	110
		1,2-Dichloropropane	39200
		cis-1,3-Dichloropropene	33800
		Tetrachloroethene	71.6
		Toluene	115
Pair No. 2 Tenax, Tenax-Charcoal	3J-2-83, 84	Chloromethane	5340
		Methylene Chloride	463
		Acetone	306
		2-Butanone	1150
		Bromoform	77.5

(continued)

TABLE 5-18. (continued)

Sample ID	Sample No.	Compound	Amount ng
Pair No. 3 Tenax, Tenax-Charcoal	3J-2-85, 86	Chloromethane	3920
		Methylene Chloride	193
		Acetone	675
		2-Butanone	981
		Vinyl Acetate	54.5
		Bromoform	76.1
		Toluene	88.5
Pair No. 4 Tenax, Tenax-Charcoal	3J-2-87, 88	Chloromethane	12900
		Methylene Chloride	491
		Acetone	80.4
		2-Butanone	435
		Bromoform	82.8

TABLE 5-19. VOST VOLATILE ORGANICS RESULTS SUMMARY
RUN 3

Sample ID	Sample No.	Compound	Amount ng
Condensate Blank	3J-3-81	Methylene Chloride	4960
		Acetone	1630
Condensate No. 1	3J-3-77	Methylene Chloride	5960
		Acetone	1850
Condensate No. 2	3J-3-78	Methylene Chloride	668
Condensate No. 3	3J-3-79	Methylene Chloride	3140
		Acetone	1100
Condensate No. 4	3J-3-80	Methylene Chloride	712
		Acetone	996
Trip Blank Tenax, Tenax-Charcoal	3J-3-75, 76	Methylene Chloride	145
Field Blank Tenax, Tenax-Charcoal	3J-3-73, 74	Chloromethane	450
		Methylene Chloride	329
		Acetone	51.9
		2-Butanone	354
		1,1,1-Trichloroethane	105
		Toluene	64.1
Pair No. 1 Tenax, Tenax-Charcoal	3J-3-65, 66	Chloromethane	19200
		Methylene Chloride	375
		Acetone	314
		2-Butanone	760
		1,1,1-Trichloroethane	68.2
		Bromoform	77.2
		Toluene	54.3
Pair No. 2 Tenax, Tenax-Charcoal	3J-3-67, 68	Chloromethane	7780
		Methylene Chloride	805
		Acetone	226
		2-Butanone	801

(continued)

TABLE 5-19. (continued)

Sample ID	Sample No.	Compound	Amount ng
Pair No. 3 Tenax, Tenax-Charcoal	3J-3-69, 70	Chloromethane	10000
		Methylene Chloride	3610
		Acetone	286
		2-Butanone	1110
		Toluene	96.0
Pair No. 4 Tenax, Tenax-Charcoal	3J-3-71, 72	Chloromethane	4400
		Methylene Chloride	88.8
		Acetone	210
		2-Butanone	590
		Tetrachloroethene	66.3

Volatile Organics in the liquid process samples are summarized in Table 5-20. Low levels of the common laboratory solvents, acetone and 2-butanone, were found in several of the process samples. The post-test process-water samples from Runs 2 and 3 also contained bromoform at levels that were slightly above the detection limit of 5 $\mu g/L$.

TABLE 5-20. AQUEOUS VOLATILE ORGANIC SUMMARY

Run No.	Sample ID	Sample No.	Compound	Concn, μg/L
1	Scrubber Liquor Pretest	3J-1-014, 015	ND[a]	ND
	Scrubber Liquor Post-Test	3J-1-035, 036	ND	ND
	Scrubber Brine Pretest	3J-1-016, 017	Acetone	15
	Scrubber Brine Post-Test	3J-1-037, 038	ND	ND
	Process Water Pretest	3J-1-018, 019	ND	ND
	Process Water Post-Test	3J-1-039, 040	Acetone	9[b]
	Caustic Pretest	3J-1-020, 021	Acetone	91[b]
	Caustic Post-Test	3J-1-041, 042	Acetone	74[b]
2	Scrubber Liquor Pretest	3J-2-014, 015	ND	ND
	Scrubber Liquor Post-Test	3J-2-035, 036	ND	ND
	Scrubber Brine Pretest	3J-2-016, 017	ND	ND
	Scrubber Brine Post-Test	3J-2-037, 038	ND	ND
	Process Water Pretest	3J-2-018, 019	Acetone	9[b]
	Process Water Post-Test	3J-2-039, 040	Acetone	17
			Bromoform	7
	Caustic Pretest	3J-2-020, 021	Acetone	84[b]
	Caustic Post-Test	3J-2-041, 042	Acetone	60[b]
			2-Butanone	10

(continued)

TABLE 5-20. (continued)

Run No.	Sample ID	Sample No.	Compound	Concn, μg/L
3	Scrubber Liquor Pretest	3J-3-014, 015	ND	ND
	Scrubber Liquor Post-Test	3J-3-035, 036	ND	ND
	Scrubber Brine Pretest	3J-3-016, 017	ND	ND
	Scrubber Brine Post-Test	3J-3-037, 036	Acetone	8[b]
	Process Water Pretest	3J-3-018, 019	Acetone	10[b]
	Process Water Post-Test	3J-3-039, 040	Acetone	11[b]
			Bromoform	6
	Caustic Pretest	3J-3-020, 021	Acetone	35[b]
	Caustic Post-Test	3J-3-041, 042	Acetone	69[b]
			2-Butanone	18

[a]ND - Not Detected (No compounds detected with concentrations greater than detection limit at 5 μg/L).
[b]Compound present in the lab blank.

5.4.3 Anion Determinations

The anions Cl^- and F^- were measured in the stack gas to determine the levels of HCl and HF in the emissions from the incinerator; the required samples were collected with an M5AT. Details of the operating parameters for the M5AT are presented in Table 5-21 and indicate that the sampling for acids was valid. The anions measured in the incinerator-residue samples were F^- and PO_4^{3-}.

TABLE 5-21. METHOD 5 ACID TRAIN RESULTS

Parameter	Units	Run 1	Run 2	Run 3
Date	--	02/5/90	12/6/90	12/6/90
Sample Time	minutes	120	120	120
Sample Volume	dscf	93.29	63.30	56.90
Stack Gas Flow Rate	dscf/hr	413000	414000	375000
Stack Gas Temperature	°F	197	196	197
Stack Gas Moisture	%	38.6	38.4	38.2
Percent Isokinetic		103.2	99.2	98.4
HCl Catch	mg	0.234	2.43	0.891
HCl Emission Rate	lb/hr	≤0.0023	≤0.035	≤0.013
Oxygen Conc.	%	14.7	14.4	14.6
CO_2 Conc.	%	4.4	4.6	4.4
HF Catch	mg	11.58	16.66	13.64
HF Emission Rate	lb/hr	0.113	0.240	0.198
Leak Checks:				
Pitot Pretest		pass	pass	pass
Pitot Post-Test		pass	pass	pass
Train Pretest, cfm		0.000 @ 15" Hg	0.004 @ 15" Hg	0.000 @ 17" Hg
Train Post-Test, cfm		0.001 @ 15" Hg	0.000 @ 15" Hg	0.001 @ 10.5" Hg

Table 5-22 gives the results of the analyses of the M5AT for HCl, Cl_2, and HF. By using both H_2SO_4 and NaOH impingers the M5AT differentiates between HCl and Cl_2 in the stack. The amounts of HCl in the samples were low; that is, the HCl levels found in the real samples and in the blank samples were comparable in magnitude. The HCl emission rates in the three test runs were, respectively, 0.0023, 0.035, and 0.013 lb/hr -- all far below the allowable limit of 4 lb/hr. The corresponding HF emission rates (for which there are no regulatory requirements) were 0.11, 0.24, and 0.20 lb/hr. But the HF input rate to the PAS would have been 107 lb/hr if the fluorine in the agent had been quantitatively converted to HF. Thus, the PAS collection efficiency for HF under these circumstances would have been 99.90%, 99.78%, and 99.81%. (There is no collection-efficiency requirement for HF.)

Field data sheets for the above sampling trains are provided in Appendix G. Complete tabulations of reduced data and calculations of concentrations for the trains are provided in Appendix C.

TABLE 5-22. METHOD 5 ACID TRAIN RESULTS

Sample ID	Sample No.	Total µg HCl	Cl_2	HF
Blank Train				
Filter 3QA48	3J-1-043	10		8
Front Wash, Acetone[a]	3J-1-044	16		4
Imp 1,2,3	3J-1-045	74		13
Imp 4,5	3J-1-046		39	18
	Total	100	39	43
0.1N H_2SO_4 Blank	3J-1-047	18		3
0.1N NaOH Blank	3J-1-048		22	10
DI H_2O Blank	3J-1-049	10		3
Acetone Blank	3J-1-050	5		3
	Total	33	22	19
Run 1				
Filter 3QA51	3J-1-080	8		23
Front Wash, Acetone	3J-1-081	Lost Sample		
Imp 1	3J-1-082	77		6,821
Imp 2	3J-1-083	73		2,637
Imp 3	3J-1-084	84		1,413
Imp 4	3J-1-085		62	703
Imp 5	3J-1-086		35	25
	Total	242	97	11,622
0.1N H_2SO_4 Blank	3J-1-087	2,263		3
0.1N NaOH Blank	3J-1-088		30	25
DI H_2O Blank	3J-1-089	14		3
Acetone Blank	3J-1-090	10		2
Blank, Filter 3QA55	3J-1-091	6		5
	Total	2,293	30	38
Run 2				
Filter 3QA56	3J-2-059	4		29
Front Wash, Acetone[a]	3J-2-060	17		4
Imp 1	3J-2-061	725		12,215
Imp 2	3J-2-062	813		3,084
Imp 3	3J-2-063	888		1,251
Imp 4,5	3J-1-064		833	90
	Total	2,447	833	16,673

(continued)

TABLE 5-22. (continued)

Sample ID	Sample No.	Total µg HCl	Cl_2	HF
Run 2 (cont)				
0.1N H_2SO_4 Blank	3J-2-065	11		2
0.1N NaOH Blank	3J-2-066		11	4
DI H_2O Blank	3J-2-067	1,512		2
Acetone Blank	3J-1-068	4		2
	Total	1,527	11	10
Run 3				
Filter 3QA54	3J-3-043	3		41
Front Wash, Acetone[a]	3J-3-044	5,070		79
Imp 1	3J-3-045	253		10,054
Imp 2	3J-3-046	471		2,826
Imp 3	3J-3-047	167		627
Imp 4,5	3J-3-048		518	22
	Total	5,964	518	13,649
0.1N H_2SO_4 Blank	3J-3-049	8		2
0.1N NaOH Blank	3J-3-050		12	2
DI H_2O Blank	3J-3-051	369		2
Acetone Blank	3J-3-052	4		2
	Total	381	12	8

The process liquids, fuel oil, and refractory salt were analyzed for fluoride and phosphate; Table 5-23 gives the fluoride and phosphate results. The highest concentrations of fluoride and phosphate were found in the scrubber liquor and scrubber brine.

TABLE 5-23. ANION CONCENTRATIONS

Run No.	Sample ID	Sample No.	Concentration (mg/L) F^-	PO_4^{-3}
1	Process Water Pretest	3J-1-010	0.060	ND[a]
	Process Water Post-Test	3J-1-031	0.043	ND
	Scrubber Liquor Pretest	3J-1-004	150	430
	Scrubber Liquor Post-Test	3J-1-025	470	1400
	Scrubber Brine Pretest	3J-1-007	17,000	17,000
	Scrubber Brine Post-Test	3J-1-028	12,000	27,000
	Caustic Pretest	3J-1-013	0.54	13
	Caustic Post-Test	3J-1-034	0.57	<10
	Fuel Oil Pretest	3J-1-001	9.2	ND
	Fuel Oil Post-Test	3J-1-022	0.30	ND
2	Process Water Pretest	3J-2-010	0.031	ND
	Process Water Post-Test	3J-2-031	0.10	0.19
	Scrubber Liquor Pretest	3J-2-004	170	600
	Scrubber Liquor Post-Test	3J-2-024	12,000	30,000
	Scrubber Brine Pretest	3J-2-007	8,600	19,000
	Scrubber Brine Post-Test	3J-2-028	11,000	33,000
	Caustic Pretest	3J-2-013	0.45	<10
	Caustic Post-Test	3J-2-034	1.9	<10
	Fuel Oil Pretest	3J-2-001	0.26	ND
	Fuel Oil Post-Test	3J-2-022	1.2	ND
3	Process Water Pretest	3J-3-010	0.060	<0.10
	Process Water Post-Test	3J-3-031	87	170
	Scrubber Liquor Pretest	3J-3-004	380	1,000
	Scrubber Liquor Post-Test	3J-3-023	470	1,800
	Scrubber Brine Pretest	3J-3-007	11,000	30,000
	Scrubber Brine Post-Test	3J-3-028	14,000	35,000
	Caustic Pretest	3J-3-013	0.48	29
	Caustic Post-Test	3J-3-032	0.57	<10
	Fuel Oil Pretest	3J-3-001	0.25	ND
	Fuel Oil Post-Test	3J-3-022	1.2	ND
Refractory Salt		3J-Salt-1	1.8	1,800

[a]ND = Not Detected (PO_4^{-3} detection limit 0.10 mg/L or 1.5 g/kg).

5.4.4 Metals analysis

Samples intended for the determination of metals were collected from the stack emissions with an MMT. Table 5-24 indicates the operating parameters for this train. Particulate materials were also collected with the MMT, and the results of particle-concentration measurements are also detailed in the table.

TABLE 5-24. METHOD 5 MULTIPLE METALS TRAIN CONDITIONS AND RESULTS

Parameter	Units	Run 1	Run 2	Run 3
Date	--	12/5/90	12/6/90	12/6/90
Sample Time	minutes	72	72	72
Sample Volume	dscf	55.42	53.60	55.14
Stack Gas Flow Rate	dscf/hr	418000	396000	392000
Stack Gas Temperature	°F	198	196	198
Stack Gas Moisture	%	37.8	38.5	38.4
Percent Isokinetic		100.9	103.1	107.0
Particulate Conc. at 7% O_2	mg/dncm	3.74	4.23	3.89
Oxygen Conc.	%	14.5	14.4	4.5
CO_2 Conc.	%	4.5	4.6	4.5
Total Particulate Catch wgt	mg	2.7	3.0	2.8
Leak Checks:				
Pitot Pretest		pass	pass	pass
Pitot Post Test		pass	pass	pass
Train Pretest, cfm		0.002 @ 17" Hg	0.004 @ 15" Hg	0.000 @ 16" Hg
Train Post Test, cfm		0.002 @ 10" Hg	0.001 @ 10" Hg	0.000 @ 11"Hg

The remaining results for the MMT are given in Tables 5-25, 5-26, 5-27, and 5-28. These results show that nine of the metals were found in one or more of the samples, but in most cases, these metals were also present in the blanks. Emission rates corrected for blank responses are also provided in Tables 5-25 through 5-28, and complete tabulations of reduced data and calculatons of concentrations for the train samples are provided in Appendix C. There are no regulatory limits for metal concentrations in these sample media; however, the concentrations of most metals were near or below the applicable method detection limits.

TABLE 5-25. METHOD 5 METAL TRAIN RESULTS
BLANK RUN

Sample Description	Sample No.	Amount Found, Total µg																
		Tl	As	Se	Cr	Cd	Pb	Ba	B	V	Ag	Sb	P	Zn	Ni	Mn	Be	Hg
Front Half																		
Acetone Blank	3J-1-062	ND[a]	ND	ND	ND	ND	ND	ND	6.7	ND	ND	ND	12	ND	ND	ND	ND	ND
0.1N HNO_3 Blank	3J-1-063																	
Filter 3QA50	3J-1-051																	
Front Wash (Acetone)	3J-1-052	ND	ND	ND	ND	ND	ND	ND	ND	ND	17	ND	27	22	12	ND	ND	ND
Front Wash (0.1N HNO_3)	3J-1-053																	
Back Half																		
Impinger Blank	3J-1-059	ND	ND	ND	ND	ND	ND	ND	160	ND	ND	ND	150	39	ND	ND	ND	ND
Impinger 1	3J-1-054																	
Impinger 2	3J-1-055	ND	ND	ND	ND	ND	7.1	ND	190	ND	ND	ND	200	44	100	ND	ND	ND
Impinger 3	3J-1-056																	

[a]ND - Not detected. Detection limits for Tl - 40 µg, As - 10 µg, Se - 4 µg, Cr - 4 µg, Cd - 4 µg, Pb - 4 µg, Ba - 4 µg, B - 4 µg, V - 4 µg, Ag - 5 µg, Sb - 4 µg, P - 4 µg, Zn - 4 µg, Ni - 4 µg, Mn - 4 µg, Be - 4 µg and Hg - 0.5 µg.

TABLE 5-26. METHOD 5 METAL TRAIN RESULTS
RUN 1

Sample Description	Sample No.	Amount Found, Total µg																
		Tl	As	Se	Cr	Cd	Pb	Ba	B	V	Ag	Sb	P	Zn	Ni	Mn	Be	Hg
Front Half																		
Acetone Blank	3J-1-133	ND[a]	ND	ND	ND	ND	ND	ND	ND	ND	ND	ND	ND	ND	ND	ND	ND	ND
0.1N HNO_3 Blank	3J-1-134																	
Filter 3QA52	3J-1-122																	
Front Wash (Acetone)	3J-1-123	ND	ND	ND	ND	ND	5.6	ND	7.9	ND	ND	ND	330	25	ND	ND	ND	ND
Front Wash (0.1N HNO_3)	3J-1-124																	
Back Half																		
Impinger Blank	3J-1-130	ND	ND	ND	ND	ND	ND	ND	170	ND	ND	ND	81	17	6.8	5.3	ND	ND
Impinger 1	3J-1-125																	
Impinger 2	3J-1-126	ND	ND	ND	ND	ND	19	11	270	ND	ND	ND	150	73	7.2	90	ND	ND
Impinger 3	3J-1-127																	
Net Emission Rate, lb/hr		ND	ND	ND	ND	ND	4.1 E-4	1.7 E-4	1.7 E-3	ND	ND	ND	6.6 E-3	1.3 E-3	6.6 E-6	1.4 E-3	ND	ND

[a]ND - Not detected. Detection limits for Tl - 40 µg, As - 10 µg, Se - 4 µg, Cr - 4 µg, Cd - 4 µg, Pb - 4 µg, Ba - 4 µg, B - 4 µg, V - 4 µg, Ag - 5 µg, Sb - 4 µg, P - 4 µg, Zn - 4 µg, Ni - 4 µg, Mn - 4 µg, Be - 4 µg and Hg - 0.5 µg.

TABLE 5-27. METHOD 5 METAL TRAIN RESULTS
RUN 2

Sample Description	Sample No.	Amount Found, Total µg																
		Tl	As	Se	Cr	Cd	Pb	Ba	B	V	Ag	Sb	P	Zn	Ni	Mn	Be	Hg
Front Half																		
Acetone Blank	3J-2-079	ND[a]	ND	ND	ND	ND	ND	ND	ND	ND	ND	ND	ND	ND	ND	ND	ND	ND
0.1N HNO_3 Blank	3J-2-080																	
Filter 3QA57	3J-2-069																	
Front Wash (Acetone)	3J-2-070	ND	ND	ND	ND	ND	ND	ND	ND	ND	ND	ND	330	20	ND	12	ND	ND
Front Wash (0.1N HNO_3)	3J-2-071																	
Back Half																		
Impinger Blank	3J-2-076	ND	ND	ND	ND	ND	ND	ND	180	ND	ND	ND	98	23	98	15	ND	ND
Impinger 1	3J-2-072																	
Impinger 2	3J-2-073	ND	ND	ND	ND	ND	9.7	6.0	370	ND	ND	ND	170	250	52	54	ND	ND
Impinger 3	3J-2-074																	
Net Emission Rate, lb/hr		ND	ND	ND	ND	ND	1.6 E-4	9.7 E-5	3.0 E-3	ND	ND	ND	6.5 E-3	4.0 E-3	0	8.4 E-4	ND	ND

[a]ND - Not detected. Detection limits for Tl - 40 µg, As - 10 µg, Se - 4 µg, Cr - 4 µg, Cd - 4 µg, Pb - 4 µg, Ba - 4 µg, B - 4 µg, V - 4 µg, Ag - 5 µg, Sb - 4 µg, P - 4 µg, Zn - 4 µg, Ni - 4 µg, Mn - 4 µg, Be - 4 µg and Hg - 0.5 µg.

TABLE 5-28. METHOD 5 METAL TRAIN RESULTS
RUN 3

Sample Description	Sample No.	Amount Found, Total μg																
		Tl	As	Se	Cr	Cd	Pb	Ba	B	V	Ag	Sb	P	Zn	Ni	Mn	Be	Hg
Front Half																		
Acetone Blank	3J-3-063	ND[a]	ND	ND	ND	ND	ND	ND	ND	ND	ND	ND	ND	33	ND	13	ND	ND
0.1N HNO_3 Blank	3J-3-064																	
Filter 3QA58	3J-3-053																	
Front Wash (Acetone)	3J-3-054	ND	22	ND	ND	ND	ND	ND	6.8	ND	ND	ND	33	18	ND	39	ND	ND
Front Wash (0.1N HNO_3)	3J-3-055																	
Back Half																		
Impinger Blank	3J-3-060	ND	ND	ND	ND	ND	ND	ND	210	ND	ND	ND	110	38	10	ND	ND	ND
Impinger 1	3J-3-056																	
Impinger 2	3J-3-057	ND	ND	ND	ND	ND	9.6	ND	220	ND	ND	ND	200	50	8.3	ND	ND	ND
Impinger 3	3J-3-058																	
Net Emission Rate, lb/hr		ND	3.4 E-4	ND	ND	ND	1.5 E-5	ND	3.4 E-4	ND	ND	ND	1.9 E-3	0	0	4.0 E-4	ND	ND

[a]ND - Not detected. Detection limits for Tl - 40 μg, As - 10 μg, Se - 4 μg, Cr - 4 μg, Cd - 4 μg, Pb - 4 μg, Ba - 4 μg, B - 4 μg, V - 4 μg, Ag - 5 μg, Sb - 4 μg, P - 4 μg, Zn - 4 μg, Ni - 4 μg, Mn - 4 μg, Be - 4 μg and Hg - 0.5 μg.

The results of the analyses of incinerator-process samples for metals are given in Table 5-29. Lead was the only metal present at levels above the regulatory limits. Specifically, the pretest and post-test samples of scrubber brine from Run 1, as well as the pretest scrubber-brine sample from Run 2, contained lead concentrations greater than the regulatory limit of 5 μg/mL.

TABLE 5-29. METAL ANALYSIS PROCESS SAMPLES

Run	Sample ID	Sample No.	Concentration, µg/mL							
			As	Se	Cr	Cd	Pb	Ba	Ag	Hg
1	Scrubber Liquor Pretest	3J-1-003	0.060	ND[a]	ND	ND	0.46	ND	ND	ND
	Scrubber Liquor Post Test	3J-1-024	0.083	ND	0.042	ND	1.1	ND	ND	ND
	Scrubber Brine Pretest	3J-1-006	0.70	ND	0.63	0.67	58[b]	0.23	ND	ND
	Scrubber Brine Post Test	3J-1-027	0.59	ND	0.29	0.50	41[b]	0.26	ND	ND
	Process Water Pretest	3J-1-009	ND	ND	ND	0.084	ND	ND	ND	ND
	Process Water Post Test	3J-1-030	0.060	ND	ND	ND	ND	ND	ND	ND
	Caustic Pretest	3J-1-012	ND	ND	ND	ND	0.051	0.053	ND	ND
	Caustic Post Test	3J-1-030	ND	0.047	ND	ND	0.048	0.046	ND	ND
	Fuel Oil Pretest	3J-1-001	ND	ND	ND	ND	ND	ND	ND	ND
	Fuel Oil Post Test	3J-1-022	ND	ND	ND	ND	ND	ND	ND	ND
2	Scrubber Liquor Pretest	3J-2-003	0.040	ND	ND	ND	0.44	ND	ND	ND
	Scrubber Liquor Post Test	3J-2-024	0.75	ND	0.056	0.050	2.6	0.34	ND	ND
	Scrubber Brine Pretest	3J-2-006	0.34	ND	0.37	0.27	24[b]	0.17	ND	ND
	Scrubber Brine Post Test	3J-2-027	0.79	ND	0.17	0.042	3.0	0.15	ND	ND
	Process Water Pretest	3J-2-009	ND	ND	ND	ND	0.057	ND	ND	ND
	Process Water Post Test	3J-2-030	ND	ND	ND	ND	ND	ND	ND	ND
	Caustic Pretest	3J-2-012	ND	0.14	ND	ND	0.058	0.077	ND	ND
	Caustic Post Test	3J-2-033	0.22	0.18	ND	ND	ND	0.042	ND	ND
	Fuel Oil Pretest	3J-2-001	ND	ND	ND	ND	ND	ND	ND	ND
	Fuel Oil Post Test	3J-2-022	ND	ND	ND	ND	ND	ND	ND	ND

(continued)

TABLE 5-29. (continued)

Run	Sample ID	Sample No.	Concentration, μg/mL							
			As	Se	Cr	Cd	Pb	Ba	Ag	Hg
3	Scrubber Liquor Pretest	3J-3-003	ND	ND	ND	ND	0.50	ND	ND	ND
	Scrubber Liquor Post Test	3J-3-024	0.063	ND	ND	ND	0.48	ND	ND	ND
	Scrubber Brine Pretest	3J-3-006	0.68	ND	0.23	0.073	4.5	0.14	ND	ND
	Scrubber Brine Post Test	3J-3-027	0.28	ND	0.17	ND	0.96	0.099	ND	ND
	Process Water Pretest	3J-3-009	0.044	ND	ND	ND	0.047	ND	ND	ND
	Process Water Post Test	3J-3-030	0.066	ND	0.058	ND	0.98	0.041	ND	ND
	Caustic Pretest	3J-3-012	0.17	0.13	ND	ND	0.048	0.065	ND	0.0011
	Caustic Post Test	3J-3-033	0.27	0.42	0.22	0.38	0.30	0.41	0.091	0.0006
	Fuel Oil Pretest	3J-3-001	ND	ND	ND	ND	ND	ND	ND	ND
	Fuel Oil Post Test	3J-3-022	ND	ND	ND	ND	ND	ND	ND	ND
			μg/g							
	Refractory Salt	3J-Salt-2	0.12	ND	0.071	ND	ND	0.34	ND	ND

[a]ND - Not detected. In scrubber liquor, scrubber brine, process H_2O and caustic samples, the detection limits are: As - 0.04 μg/mL, Se - 0.04 μg/mL, Cr - 0.04 μg/mL, Cd - 0.04 μg/mL, Pb - 0.04 μg/mL, Ba - 0.02 μg/mL, Ag - 0.08 μg/mL and Hg - 0.0005 μg/mL. In the fuel oil samples the detection limits are: As - 0.80 μg/mL, Se - 0.80 μg/mL, Cr - 0.80 μg/mL, Cd - 0.80 μg/mL, Pb - 0.80 μg/mL, Ba - 0.40 μg/mL, Ag - 1.6 μg/mL and Hg - 0.0005 μg/mL.

[b]Lead concentration above regulatory limit of 5 μg/mL.

5.4.5 pH Analysis

The pH of the process samples was measured with a pH electrode after the samples were delivered to the SRI laboratory. pH levels of all aqueous samples are given in Table 5-26. The caustic solution contained about 18% NaOH and the pH levels in the caustic samples were, therefore, always at the upper limit (~13.5) of the meter.

TABLE 5-30. SAMPLE pH

Run No.	Sample ID	Sample No.	pH
1	Process Water Pretest	3J-1-010	8.3
	Process Water Post Test	3J-1-031	8.9
	Scrubber Liquor Pretest	3J-1-004	8.9
	Scrubber Liquor Post Test	3J-1-025	9.6
	Scrubber Brine Pretest	3J-1-007	9.9
	Scrubber Brine Post Test	3J-1-028	10.2
	Caustic Pretest	3J-1-013	>13
	Caustic Post Test	3J-1-034	>13
2	Process Water Pretest	3J-2-010	8.1
	Process Water Post Test	3J-2-031	7.8
	Scrubber Liquor Pretest	3J-2-004	9.5
	Scrubber Liquor Post Test	3J-2-024	9.7
	Scrubber Brine Pretest	3J-2-007	10.2
	Scrubber Brine Post Test	3J-2-028	10.0
	Caustic Pretest	3J-2-013	>13
	Caustic Post Test	3J-2-034	>13
3	Process Water Pretest	3J-3-010	8.1
	Process Water Post Test	3J-3-031	8.9
	Scrubber Liquor Pretest	3J-3-004	8.9
	Scrubber Liquor Post Test	3J-3-023	9.0
	Scrubber Brine Pretest	3J-3-007	9.6
	Scrubber Brine Post Test	3J-3-028	8.9
	Caustic Pretest	3J-3-013	>13
	Caustic Post Test	3J-3-032	>13

5.4.6 Particulate Measurements

Measurements of particle concentrations were made on samples from the MMT only because of problems encountered with some of the acid trains. In particular, the particle-collection data from one acid train was lost because of breakage, and foreign matter was found in the probe rinse from another acid train. The particulate data from all three MMT runs were valid; hence, the loss of M5AT particulate data did not cause any difficulty in meeting the data requirements for the test program. In fact, the procedures set forth in the test plan (Appendix J) allowed for particulate concentrations to be determined with samples from either the multiple-metals train or the acid train. The acetone probe rinse and the filter were dried to a constant weight. And after the filter and probe rinse had been weighed, the metals were determined on the dried samples. The trains passed all required pretest and post-test leak checks of the pitot tube and sampling system.

The particulate emission rates as calculated from the M5MMT results for the three burns were, respectively, 0.045, 0.049, and 0.044 lb/hr. The particulate concentrations adjusted to 7% oxygen in the flue gas were 3.74, 4.23, and 3.89 mg/dnm^3. These values were all well below the allowable limit of 180 mg/dnm^3.

Formulas and nomenclautre for particulate concentrations and emission rates are given in Appendix G.

5.5 Chemical Agent - POHC

5.5.1 Results

GB was designated as the POHC. The feed rates for GB were uniformly 750 lb/hr for the three burns. Nondetected GB concentrations in the stack gases can be stated as below 1 ASC or 0.0003 mg/m3 in each of the three burns. The resulting emission rate is given by the equation:

Emission rate (lb/hr) = (Concentration, mg/m3) X (1 g/1000 mg) X (0.437 grains/cf)/(g/m3)) X (1 lb/7000 grains) X (Stack gas flow, cfm) X (60 min./hr)

= 0.00000375 X (concentration, mg/m3) X (Stack gas flow rate, cfm)

For the three burns, the emission rates are thus

Emission Rate 1 ≤0.00000375 X 0.0003 X 13900

≤0.0000156 lb/hr

Emission Rate 2 ≤0.00000375 X 0.0003 X 13500

≤0.0000152 lb/hr

Emission Rate 3 ≤0.00000375 X 0.0003 X 12500

≤0.0000141 lb/hr

5.5.2 Destruction and Removal Efficiency (DRE)

The DRE for GB can be calculated from the equation:

%DRE = 100x((Feed Rate) - (Emission Rate))/(Feed Rate)

where the Feed Rate is the input rate of the analyte and the Emission Rate is the mass rate at which residual analyte is discharged with the stack gases.

The DRE's are thus

DRE 1 ≥100 X (750 - 0.0000156)/750 percent
≥99.9999979 percent

DRE 2 ≥100 X (750 - 0.0000152)/750 percent
≥99.999998 percent

DRE 3 ≥100 X (750 - 0.0000141)/750 percent
≥99.9999981 percent

These exceeded the RCRA requirement that the DRE must be equal to or greater than 99.99%.

All samples that were removed from the secure area of the incinerator facility had to be certified as being free of agent. Accordingly, the JACADS laboratory analyzed all process liquids to certify them as being free of agent before samples were transported. Other types of samples were determined to be agent-free because of the prevailing incinerator operating parameters or the results of pertinent ACAMS measurements.

6. QUALITY ASSURANCE AND QUALITY CONTROL

6.1 Background

Obtaining defensible results in a sampling and analysis program of the type carried out here requires that a thorough quality assurance/quality control (QA/QC) program be followed. Such QA/QC programs were followed in all laboratory functions involved in the analyses performed in this program. Typical items used to maintain QA/QC are instrument and sampling system calibrations, initial and continuing instrument calibration verifications, sample preservation and identification, replicate samples and analysis, analysis of blank samples, inclusion of matrix spikes and surrogates where appropriate, and maintaining complete chain-of-custody documentation for all samples. Details regarding the QA/QC programs implemented by each participant can be found in Appendix J (SRI Analytical Test Plan). Results of the QA/QC activities are provided in Appendices D (SRI and RECRA Analytical Results) and G (METCO Sampling Report) and are summarized below.

As a routine QA/QC procedure, the laboratory analyzed blank and spike samples. The blank samples included laboratory reagents (method blank), field blanks, and trip blanks. The spike samples consisted of matrix spike, matrix spike duplicate, and spikes according to EPA certified methods appropriate for the specific analytes determined and quantified in this work. The blank samples were used to detect, if any, contamination introduced in the field and the laboratory and to establish background values which may be used to adjust or correct routine analytical results. The matrix spiked samples were used to check the performance and the recovery efficiency of the various analytical methods used in this work. The post-test process residue samples from run 2 were used for all process sample matrix spikes (MS) and matrix spike duplicates (MSD). The MS and MSD were performed for volatile organic semivolatile organics, PCDD/F and metals. Also, all organic analysis used internal standards and surrogate standards. The reagents used to prepare the M5AT were spiked with chloride at three levels to measure recovery. Additionally, the MM5s were spiked with two chlorinated compounds and one dioxin prior to sampling to monitor train retention. Also, blank trains open to ambient air were assembled for the MM5 trains, the M5ATs, and the MMTs and then disassembled. After rinsing the train and collecting the rinses, all extracts and components (filter, sorbent, etc.) were sent to the laboratory for analysis. The resulting information is used to identify recovery induced contamination. The blank data are reported with the sample sheets; spikes and duplicates are as indicated below.

The precision of analyses was measured by performing spikes and duplicates of all sample types with the analytes of interest. Surrogate spikes and matrix spike compounds were chosen from suggested materials in the methods in SW846. The difference between duplicate analysis (matrix spike and matrix spike duplicate) was used to estimate the precision of the analyses and the recovery of the spike samples were used to estimate the bias of the analysis. The surrogate spikes, which were authentic standards that were added to every sample prior to sample processing and analysis, were used to provide QC on every sample by constantly monitoring for unusual matrix effects and gross sample-processing errors. The surrogate standards were compounds that were not likely to be found in the matrix.

sample-processing errors. The surrogate standards were compounds that were not likely to be found in the matrix.

VOA and VOST samples were shipped to SRI and RECRA so that analyses could be complete within 2 weeks of sample collection. Other samples were shipped as rapidly as DOT regulations allowed and analyzed promptly. Samples that required refrigeration were shipped in ice chests and packed with blue ice to maintain a temperature of 4 °C. Samples were received on December 9 for VOST and VOA and from December 14 through 19 for the remaining samples.

Chain-of-custody (COC) was maintained for the samples according to the QA Project Plan included in the Trial Burn Test Plan (Appendix J). These procedures require that samples be recorded on sample custody tracking sheets, and that when samples are transferred from one individual to another that these sheets are transferred, signed, and dated. The COC documentation is contained in Appendix E. The procedures also require that the custodian maintain possession of the samples or that they be stored under secure conditions.

6.2 Semivolatile Organic Analysis

The QA/QC stack gas samples included a train blank which consisted of an entire MM5; a field blank for each run which consisted of a filter, XAD-2 sorbent trap, and all reagents required for the train assembly; an XAD-2 trip blank; and laboratory blanks for each matrix and for each day that samples were prepared. Audit samples for the MM5 were received from EPA and consisted of XAD-2 samples spiked with PCDD/F.

The XAD-2 sorbent was methylene chloride prepared according to SW846 Method 0010. A 40 g sample was extracted with CH_2Cl_2 and analyzed by GC/MS to verify that the sorbent was contaminant free prior to preparing the sorbent cartridges.

Before being shipped to the field, the XAD-2 sorbent traps were spiked with 10 ug of $^{13}C_6$-2,4,6-trichlorophenol, 200 ug of d_3-1,2,4-trichlorobenzene, and 2 ng of $^{37}Cl_4$-2,3,7,8-tetrachlorodibenzo-p-dioxin. These spikes were used to indicate the recovery of chorinated acids, neutrals, and dioxins from the sample trains.

Samples were prepared as described in Section 4. The MM5 trains were spiked with two acid surrogate compounds and three neutral surrogate compounds for the semivolatile organics and with 14 labeled PCDD/F isotope dilution standards prior to sample extraction. After extraction the samples were split and 1/10 taken for semivolatile organic analysis and 9/10 for PCDD/F analysis. Semivolatile internal standards were added immediately prior to analysis. All compounds and spikes were quantified based on the internal standards.

The PCDD/F analysis uses several cleanup steps and labeled standards are used to measure recoveries. An additional aliquot of $^{37}Cl_4$-2,3,7,8-TCDD as a cleanup recovery standard was added to the dioxin fraction after extraction and prior to PCDD/F cleanup. Immediately before analysis, labeled recovery standards are added. The quantification of PCDD/F is based on the standards spiked prior to extraction.

Table 6-1 gives the recoveries for the MM5 spikes. The recovery of the trichlorophenol ranged from 79.8% to 174% and at a spike level of 10 ug is considered excellent recovery. The recovery of trichlorobenzene ranged from 46.8% to 107% and is adequate. The TCDD was spiked both prior to sampling and prior to cleanup, and the combined recovery can be considered adequate.

Recoveries of the spikes used to measure extraction efficiencies for the MM5 semivolatile compounds are indicated on the data sheets included with the analyses in Appendix D. The recoveries for the sample trains ranged from a low of 25% for the somewhat volatile d_5-phenol to a high of 82.1% for less volatile fluorobiphenyl. The extraction solvent, toluene, eluted from the GC column over a long enough period of time to interfere with the quantition of fluorophenol, and no results for fluorophenol are reported for the MM5 samples.

The QA/QC samples for the incinerator residue samples included laboratory blanks (one for each day of extractions or each matrix), surrogate spikes (each sample), matrix spikes (one for each matrix), and matrix spike duplicates (one for each matrix).

Surrogates were not measured in fuel oil samples because of the large dilution required of the samples. Several samples had low recovery of one or more surrogates; however, with the exception of the scrubber brine from Run 2 pretest and Run 3 post-test only one acid or on base-neutral surrogate was low. Reanalysis of the Run 2 pretest and Run 3 post-test scrubber brine samples gave good recovery of surrogates. Process water from Run 3 pretest had low recovery of 2-fluorophenol and nitrobenzene-d5. Process water from Run 3 post test had low recovery of 2-fluorophenol. Scrubber liquor from Run 3 post test had low recovery of 2-fluorophenol and the scrubber liquor MSD had low recovery of 2-fluorophenol.

Matrix spikes and duplicates for semivolatile organics are in Tables 6-2 through 6-6. Except for 4-nitrophenol, recoveries were within the range indicated in Method 8270A of SW846 (limits are given in the tables). The poor recovery of 4-nitrophenol indicates that this compound must be flagged as either not detectable or questionable in these samples. A measure of the precsion of the analyses is given by the relative percent difference (RPD) for the MS and MSD. In most cases, the RPD was less than 20% which is excellent. The scrubber liquor and the refractory salt gave less precise results than the other samples.

The PCDD/F audit results are in Table 6-7. Tables 6-8 through 6-13 give spike results for the PCDD/F samples in the incinerator residues. Except for 1,2,3,4,6,7,8-HPCDF, 1,2,3,4,6,7,8 HPCDD, OCDF and OCDD in one spike of the scrubber brine, recoveries were in the range of 60-140% as required by Method 8290. The precision of the analyses as measured by the RPD was usually better than 20%. The fuel oil samples had 2 RPDs greater than 20% (38.8% and 48.35%); scrubber brine had 4 RPDs that were large (61.6%, 149.9%, 107.4% and 181%); scrubber liquor had 1 RPD of 28.2%; refractory salt had 6 RPDs that were larger than 20% (26.3%, 29.89%, 36.6%, 37.6%, 41.4% and 42.1%).

TABLE 6-1. MM5 FIELD SPIKES

Sample ID	Sample Number	TCP[a] Amount (μg) (Spike amount 10 μg)	Percent Recovery	TCB[b] Amount (μg) (Spike amount 200 μg)	Percent Recovery	$^{37}Cl_4$-2,3,7,8-TCDD[c] Amount (ng) (Spike amount 2.8 ng)[d]	Percent Recovery
Blank Train	3J-1-64 -76	16.7	167	190	95.0	2.11	75.4
Field Blank	3J-1-77 -78	14.5	145	157	78.5	1.42	50.7
Run 1 Sample Train	3J-1-109 -119	16.7	167	205	78.5	0.98	35.0
Run 1 Field Blank	3J-1-120 -121	8.83	88.3	207	104	1.28	45.7
Run 2 Sample Train	3J-2-96 -106	17.4	174	204	102	1.60	57.1
Run 2 Field Blank	3J-2-107	13.3	133	213	107	0.041	1.46
Run 2 Trip Blank	3J-2-108	7.98	79.8	93.5	46.8	0.177	6.72
Run 3 Sample Train	3J-3-82 -92	12.1	121	134	67.0	1.910	68.2
Run 3 Field Blank	3J-3-93	10.3	103	105	52.5	1.51	53.9

[a]TCP = 2,4,6-Trichlorophenol-$^{13}C_6$.
[b]TCB = 1,2,4-Trichlorobenzene-d_3.
[c]$^{37}Cl_4$-2,3,7,8-TCDD = Tetrachlorodibenzo-p-dioxin.
[d]2 ng spiked before shipment; 0.8 μg spiked after extraction.

TABLE 6-2. SEMIVOLATILES
QUALITY CONTROL SAMPLES FOR THE LIC RCRA TRIAL BURN
Process Water (Run 2 Post-Test)

Sample No.	Compound	Sample result (µg/L)	Amount added (µg/L)	Matrix spike Found (µg/L)	Matrix spike % Recov.	Matrix spike duplicate Found (µg/L)	Matrix spike duplicate % Recov.	MS/MSD RPD	% Recovery range from SW-846
3J-2-029									
3J-2-052MS									
3J-2-053MSD	Nitrobenzene-d5[a]				47.5		56.8	18	35-114
Process Water	2-Fluorobiphenyl[a]				49.5		56.6	13	30-116
Post Test	Terphenyl-d14[a]				76.2		79.2	3.9	33-141
	Phenol-d5[a]				28.4		31.7	11	10-94
	2-Fluorophenol[a]				24.5		29.1	17	21-100
	1,2,4-Trichlorobenzene	ND[b]	201	108	53.7	106	52.7	1.9	44-142
	Acenaphthene	ND	202	138	68.3	137	67.8	0.74	47-145
	2,4-Dinitrotoluene	ND	202	133	65.8	136	67.3	2.2	39-139
	Pyrene	ND	202	207	102	193	95.5	6.6	52-115
	N-Nitroso-di-n-propylamine	ND	202	116	57.4	120	59.4	1.7	Detected-230
	1,4-Dichlorobenzene	ND	209	93.7	44.8	92.9	44.4	0.90	20-124
	Pentachlorophenol	ND	397	148	37.3	132	33.2	12	14-176
	Phenol	ND	383	85.4	22.3	89.0	23.2	3.9	5-112
	2-Chlorophenol	ND	404	171	42.3	175	43.3	2.3	23-134
	4-Chloro-3-methylphenol	ND	396	197	49.7	206	52.0	4.5	22-147
	4-Nitrophenol	ND	398	ND	--	ND	--	--	Detected-132

[a]Surrogate compound.
[b]ND - Not detected (detection limit - 10 µg/L).

TABLE 6-3. SEMIVOLATILES
QUALITY CONTROL SAMPLES FOR THE LIC RCRA TRIAL BURN
Scrubber Brine (Run 2 Post-Test)

Sample No.	Compound	Sample result (μg/L)	Amount added (μg/L)	Matrix spike Found (μg/L)	Matrix spike % Recov.	Matrix spike duplicate Found (μg/L)	Matrix spike duplicate % Recov.	MS/MSD RPD	% Recovery range from SW-846
3J-2-026									
3J-2-045MS									
3J-2-046MSD	Nitrobenzene-d5[a]				50.2		58.5	4.0	35-114
Scrubber Brine	2-Fluorobiphenyl[a]				55.7		57.0	2.3	30-116
Post Test	Terphenyl-d14[a]				91.0		83.4	8.7	33-141
	Phenol-d5[a]				40.3		41.8	3.6	10-94
	2-Fluorophenol[a]				33.2		34.5	3.8	21-100
	1,2,4-Trichlorobenzene	ND[b]	201	113	56.2	114	56.7	0.89	44-142
	Acenaphthene	ND	202	145	71.8	152	75.2	4.6	47-145
	2,4-Dinitrotoluene	ND	202	132	65.3	138	68.3	4.5	39-139
	Pyrene	ND	202	189	93.6	202	100	6.6	52-115
	N-Nitroso-di-n-propylamine	ND	202	101	50.0	109	54.0	7.7	Detected-230
	1,4-Dichlorobenzene	ND	209	95.0	45.4	94.6	45.3	0.22	20-124
	Pentachlorophenol	ND	397	218	54.9	220	55.4	0.90	14-176
	Phenol	ND	383	111	29.0	117	30.5	5.0	5-112
	2-Chlorophenol	ND	404	189	46.8	190	47.0	0.43	23-134
	4-Chloro-3-methylphenol	ND	396	216	54.5	229	57.8	5.9	22-147
	4-Nitrophenol	ND	398	21.2	5.33	49.2	12.4	79.8	Detected-132

[a]Surrogate compound.
[b]ND - Not detected (detection limit - 10 μg/L).

TABLE 6-4. SEMIVOLATILES
QUALITY CONTROL SAMPLES FOR THE LIC RCRA TRIAL BURN
Scrubber Liquor (Run 2 Post-Test)

Sample No.	Compound	Sample result (μg/L)	Amount added (μg/L)	Matrix spike Found (μg/L)	Matrix spike % Recov.	Matrix spike duplicate Found (μg/L)	Matrix spike duplicate % Recov.	MS/MSD RPD	% Recovery range from SW-846
3J-2-023									
3J-2-047MS									
3J-2-048MSD	Nitrobenzene-d5[a]				53.8		37.9	35	35-114
Scrubber	2-Fluorobiphenyl[a]				54.8		59.2	7.7	30-116
Liquor	Terphenyl-d14[a]				77.6		64.8	18	33-141
Post Test	Phenol-d5[a]				31.5		12.0	89	10-94
	2-Fluorophenol[a]				28.2		9.58	98	21-100
	1,2,4-Trichlorobenzene	ND[b]	201	116	57.7	108	53.7	7.2	44-142
	Acenaphthene	ND	202	139	68.8	137	67.8	1.5	47-145
	2,4-Dinitrotoluene	ND	202	121	59.9	118	58.4	2.5	39-139
	Pyrene	ND	202	187	92.6	175	86.6	6.7	52-115
	N-Nitroso-di-n-propylamine	ND	202	92.0	45.5	84.7	41.9	8.2	Detected-230
	1,4-Dichlorobenzene	ND	209	96.9	46.4	82.8	39.6	16	20-124
	Pentachlorophenol	ND	397	134	33.8	120	30.2	11	14-176
	Phenol	ND	383	87.3	22.8	35.1	9.16	85	5-112
	2-Chlorophenol	ND	404	173	42.8	126	31.2	31	23-134
	4-Chloro-3-methylphenol	ND	396	204	51.5	183	46.2	11	22-147
	4-Nitrophenol	ND	398	ND	--	ND	--	--	Detected-132

[a]Surrogate compound.
[b]ND = Not detected (detection limit = 10 μg/L).

TABLE 6-5. SEMIVOLATILES
QUALITY CONTROL SAMPLES FOR THE LIC RCRA TRIAL BURN

Sample No.	Compound	Sample result (μg/L)	Amount added (μg/L)	Matrix spike Found (μg/L)	Matrix spike % Recov.	Matrix spike duplicate Found (μg/L)	Matrix spike duplicate % Recov.	MS/MSD RPD	% Recovery range from SW-846
3J-2-032									
3J-2-055MS									
3J-2-056MSD	Nitrobenzene-d5[a]				51.6		61.2	17	35-114
Caustic Post	2-Fluorobiphenyl[a]				60.8		67.4	10	30-116
Test	Terphenyl-d14[a]				84.0		85.5	1.7	33-141
	Phenol-d5[a]				34.8		43.7	23	10-94
	2-Fluorophenol[a]				--		--	--	21-100
	1,2,4-Trichlorobenzene	ND[b]	201	115	57.2	136	67.7	17	44-142
	Acenaphthene	ND	202	144	71.3	160	79.2	10	47-145
	2,4-Dinitrotoluene	ND	202	146	72.3	155	76.7	5.9	39-139
	Pyrene	ND	202	194	96.0	208	103	7	52-115
	N-Nitroso-di-n-propylamine	ND	202	84.6	41.9	98.2	48.6	15	Detected-230
	1,4-Dichlorobenzene	ND	209	95.1	45.5	113	54.1	17	20-124
	Pentachlorophenol	ND	397	226	56.9	247	62.2	8.9	14-176
	Phenol	ND	383	97.1	25.4	119	31.1	20	5-112
	2-Chlorophenol	ND	404	159	39.4	187	46.3	16	23-134
	4-Chloro-3-methylphenol	ND	396	220	55.6	241	60.8	8.9	22-147
	4-Nitrophenol	ND	398	116	29.1	130	32.7	12	Detected-132

[a]Surrogate compound.
[b]ND - Not detected (detection limit - 10 μg/L).

TABLE 6-6. SEMIVOLATILES
QUALITY CONTROL SAMPLES FOR THE LIC RCRA TRIAL BURN
Refractory Salt

Sample No.	Compound	Sample result (μg/kg)	Amount added (μg/kg)	Matrix spike Found (μg/kg)	Matrix spike % Recov.	Matrix spike duplicate Found (μg/kg)	Matrix spike duplicate % Recov.	MS/MSD RPD	% Recovery range from SW-846
3J-Salt-2									
3J-Salt-2MS									
3J-Salt-2MSD	Nitrobenzene-d5[a]				23.2		36.1	43	35-114
Refractory Salt	2-Fluorobiphenyl[a]				81.4		102	22	30-116
	Terphenyl-d14[a]				110		133	19	33-141
	Phenol-d5[a]				118		138	16	10-94
	2-Fluorophenol[a]				144		152	5.9	21-100
	1,2,4-Trichlorobenzene	ND[b]	100	111	111	103	103	7.5	44-142
	Acenaphthene	ND	101	85.3	84.5	111	110	26	47-145
	2,4-Dinitrotoluene	ND	101	87.6	86.7	92.3	91.4	5.3	39-139
	Pyrene	ND	101	70.7	70.0	150	149	72	52-115
	N-Nitroso-di-n-propylamine	ND	101	3.41	3.38	6.70	6.63	65	Detected-230
	1,4-Dichlorobenzene	ND	104	116	112	98.9	95.1	16	20-124
	Pentachlorophenol	ND	199	93.5	47.0	151	75.9	47	14-176
	Phenol	ND	192	153	79.7	136	70.8	12	5-112
	2-Chlorophenol	ND	202	161	79.7	143	70.8	12	23-134
	4-Chloro-3-methylphenol	ND	198	89.4	45.2	176	88.9	65	22-147
	4-Nitrophenol	ND	199	116	58.3	114	57.3	1.7	Detected-132

[a]Surrogate compound.
[b]ND = Not detected (detection limit = 10 μg/kg).

TABLE 6-7. PCDD/F DETERMINATION
EPA Audit Samples (RCRA-LIC)

Sample Description	Sample No.	Amount Found, ng Compounds												
		2378 TCDD	Other TCDD	2378 TCDF	Other TCDF	12378 PeCDD	Other PeCDD	12378 PeCDF	23478 PeCDF	Other PeCDF	123478 HxCDD	123678 HxCDD	123789 HexCDD	Other HxCDD
Lab Blank	--	ND[a]	ND	ND	ND	ND	ND	ND	ND	ND	ND	ND	ND	ND
EPA Audit 3740	3J-3740	0.75	20.25	7.40	29.06	2.84	18.21	3.05	5.38	25.99	1.84	4.07	9.20	17.22
EPA Audit 6130	3J-6130	1.09	11.21	4.67	9.89	1.46	8.43	1.72	3.38	24.40	1.60	2.16	5.10	10.24
EPA Audit 2002	3J-2002	ND	ND	ND	ND	ND	ND	ND	ND	ND	ND	ND	ND	ND

TABLE 6-7 (continued)

Sample Description	Sample No.	Amount Found, ng Compounds											
		123478 HxCDF	123678 HxCDF	123789 HxCDF	234789 HxCDF	Other HxCDF	1234678 HpCDD	Other HpCDD	1234678 HpCDF	1234789 HpCDF	Other HpCDF	OCDD	OCDF
Lab Blank	--	ND	ND	ND	ND	ND	ND	ND	ND	ND	ND	ND	ND
EPA Audit 3740	3J-3740	13.86	6.05	ND	6.83	24.52	23.88	18.96	24.27	2.43	14.68	35.92	4.98
EPA Audit 6130	3J-6130	8.17	3.69	ND	3.70	16.47	14.31	11.46	13.75	1.94	9.36	23.65	9.24
EPA Audit 2002	3J-2002	ND	ND	ND	ND	ND	ND	ND	ND	ND	ND	ND	ND

TABLE 6-8. SPIKED SAMPLE QUALITY CONTROL PERCENT RECOVERIES AND RELATIVE PERCENT DEVIATION (% RPD) OF PCDD/F COMPOUNDS
Post Test Caustic (3J-2-055MS, 3J-2-056MSD)
From Run 2 RCRA for LIC

Component	MS % Recovery	MSD % Recovery	RPD
2,3,7,8-TCDF (M)	100.4	98.1	2.3
2,3,7,8-TCDD (M)	96.6	81.7	16.7
1,2,3,7,8-PECDF (M+2)	93.8	88.6	5.7
2,3,4,7,8-PECDF (M+2)	100.0	94.4	5.7
1,2,3,7,8-PECDD (M+2)	91.4	88.1	3.6
1,2,3,4,7,8-HXCDF (M+2)	107.2	105.7	1.4
1,2,3,6,7,8-HXCDF (M+2)	102.6	99.7	2.8
1,2,3,7,8,9-HXCDF (M+2)	105.2	100.6	4.5
2,3,4,6,7,8-HXCDF (M+2)	109.6	111.0	1.2
1,2,3,4,7,8-HXCDD (M+2)	95.2	90.8	4.7
1,2,3,6,7,8-HXCDD (M+2)	100.0	94.8	5.3
1,2,3,7,8,9-HXCDD (M+2)	105.3	100.9	4.3
1,2,3,4,6,7,8-HPCDF (M+2)	85.8	85.5	0.5
1,2,3,4,7,8,9-HPCDF (M+2)	101.1	103.9	2.7
1,2,3,4,6,7,8-HPCDD (M+2)	98.3	93.8	4.7
OCDF (M+2)	89.4	83.0	7.5
OCDD (M+2)	116.4	105.1	10.2

TABLE 6-9. SPIKED SAMPLE QUALITY CONTROL PERCENT RECOVERIES AND RELATIVE PERCENT DEVIATION (% RPD) OF PCDD/F COMPOUNDS
Post Test Fuel Oil (3J-2-002MS, 3J-2-002MSD)
From Run 2 RCRA for LIC

Component	MS % Recovery	MSD % Recovery	RPD
2,3,7,8-TCDF (M)	100.0	120.9	18.9
2,3,7,8-TCDD (M)	98.7	88.3	11.2
1,2,3,7,8-PECDF (M+2)	95.6	111.1	15.0
2,3,4,7,8-PECDF (M+2)	99.8	113.8	13.1
1,2,3,7,8-PECDD (M+2)	106.9	90.1	17.1
1,2,3,4,7,8-HXCDF (M+2)	111.7	105.4	5.8
1,2,3,6,7,8-HXCDF (M+2)	105.1	97.0	8.0
1,2,3,7,8,9-HXCDF (M+2)	112.2	101.5	10.1
2,3,4,6,7,8-HXCDF (M+2)	64.0	104.7	48.3
1,2,3,4,7,8-HXCDD (M+2)	111.0	120.7	8.4
1,2,3,6,7,8-HXCDD (M+2)	84.5	92.7	9.3
1,2,3,7,8,9-HXCDD (M+2)	139.2	94.0	38.8
1,2,3,4,6,7,8-HPCDF (M+2)	103.1	91.1	12.3
1,2,3,4,7,8,9-HPCDF (M+2)	107.8	110.8	2.8
1,2,3,4,6,7,8-HPCDD (M+2)	94.2	101.5	7.5
OCDF (M+2)	71.5	87.2	19.7
OCDD (M+2)	117.1	107.1	8.9

TABLE 6-10. SPIKED SAMPLE QUALITY CONTROL PERCENT RECOVERIES AND RELATIVE PERCENT DEVIATION (% RPD) OF PCDD/F COMPOUNDS
Post Test Scrubber Brine (3J-2-045MS, 3J-2-046MSD)
From Run 2 RCRA for LIC

Component	MS % Recovery	MSD % Recovery	RPD
2,3,7,8-TCDF (M)	111.7	113.3	1.5
2,3,7,8-TCDD (M)	87.2	99.1	12.7
1,2,3,7,8-PECDF (M+2)	92.0	96.3	4.6
2,3,4,7,8-PECDF (M+2)	96.6	97.7	1.2
1,2,3,7,8-PECDD (M+2)	103.8	102.0	1.8
1,2,3,4,7,8-HXCDF (M+2)	119.7	103.5	14.6
1,2,3,6,7,8-HXCDF (M+2)	107.4	101.9	5.2
1,2,3,7,8,9-HXCDF (M+2)	116.0	104.3	10.5
2,3,4,6,7,8-HXCDF (M+2)	112.9	114.0	0.9
1,2,3,4,7,8-HXCDD (M+2)	85.0	93.5	9.6
1,2,3,6,7,8-HXCDD (M+2)	112.0	97.4	13.9
1,2,3,7,8,9-HXCDD (M+2)	105.7	95.6	10.1
1,2,3,4,6,7,8-HPCDF (M+2)	165.2	87.4	61.6
1,2,3,4,7,8,9-HPCDF (M+2)	107.9	108.3	0.4
1,2,3,4,6,7,8-HPCDD (M+2)	742.0	106.3	149.9
OCDF (M+2)	295.3	89.0	107.4
OCDD (M+2)	3150.7	157.4	181.0

TABLE 6-11. SPIKED SAMPLE QUALITY CONTROL PERCENT RECOVERIES AND RELATIVE PERCENT DEVIATION (% RPD) OF PCDD/F COMPOUNDS
Post Test Process Water (3J-2-052MS, 3J-2-053MSD)
From Run 2 RCRA for LIC

Component	MS % Recovery	MSD % Recovery	RPD
2,3,7,8-TCDF (M)	107.5	107.6	0.0
2,3,7,8-TCDD (M)	90.5	102.6	12.6
1,2,3,7,8-PECDF (M+2)	106.2	107.8	1.5
2,3,4,7,8-PECDF (M+2)	108.3	118.2	8.8
1,2,3,7,8-PECDD (M+2)	100.9	115.0	13.1
1,2,3,4,7,8-HXCDF (M+2)	105.3	101.7	3.4
1,2,3,6,7,8-HXCDF (M+2)	100.2	97.1	3.1
1,2,3,7,8,9-HXCDF (M+2)	105.6	98.7	6.8
2,3,4,6,7,8-HXCDF (M+2)	99.8	100.2	0.5
1,2,3,4,7,8-HXCDD (M+2)	90.4	100.3	10.3
1,2,3,6,7,8-HXCDD (M+2)	105.4	103.1	2.2
1,2,3,7,8,9-HXCDD (M+2)	99.9	104.5	4.5
1,2,3,4,6,7,8-HPCDF (M+2)	86.1	90.3	4.7
1,2,3,4,7,8,9-HPCDF (M+2)	102.5	103.7	1.2
1,2,3,4,6,7,8-HPCDD (M+2)	96.1	102.2	6.2
OCDF (M+2)	85.8	92.2	7.1
OCDD (M+2)	103.3	106.4	2.9

TABLE 6-12. SPIKED SAMPLE QUALITY CONTROL PERCENT RECOVERIES AND RELATIVE PERCENT DEVIATION (% RPD) OF PCDD/F COMPOUNDS
Post Test Scrubber Liquor (3J-2-047MS, 3J-2-048MSD)
From Run 2 RCRA for LIC

Component	MS % Recovery	MSD % Recovery	RPD
2,3,7,8-TCDF (M)	120.9	107.0	12.2
2,3,7,8-TCDD (M)	103.8	105.2	1.3
1,2,3,7,8-PECDF (M+2)	98.3	130.5	28.2
2,3,4,7,8-PECDF (M+2)	107.6	120.1	10.9
1,2,3,7,8-PECDD (M+2)	96.9	116.1	18.0
1,2,3,4,7,8-HXCDF (M+2)	103.0	103.3	0.3
1,2,3,6,7,8-HXCDF (M+2)	95.7	95.6	0.1
1,2,3,7,8,9-HXCDF (M+2)	100.5	103.9	3.3
2,3,4,6,7,8-HXCDF (M+2)	98.4	98.4	0.0
1,2,3,4,7,8-HXCDD (M+2)	105.8	98.7	6.9
1,2,3,6,7,8-HXCDD (M+2)	106.2	98.3	7.7
1,2,3,7,8,9-HXCDD (M+2)	113.3	104.9	7.7
1,2,3,4,6,7,8-HPCDF (M+2)	92.3	93.5	1.2
1,2,3,4,7,8,9-HPCDF (M+2)	107.1	108.1	0.9
1,2,3,4,6,7,8-HPCDD (M+2)	97.0	102.9	5.9
OCDF (M+2)	89.7	93.3	4.0
OCDD (M+2)	109.2	109.0	0.2

TABLE 6-13. SPIKED SAMPLE QUALITY CONTROL PERCENT RECOVERIES AND RELATIVE PERCENT DEVIATION (% RPD) OF PCDD/F COMPOUNDS
Post Test Refractory Salt (3J-2-055MS, 3J-2-055MSD)
From Run 2 RCRA for LIC

Component	MS % Recovery	MSD % Recovery	RPD
2,3,7,8-TCDF (M)	105.1	88.6	17.0
2,3,7,8-TCDD (M)	93.4	78.2	17.8
1,2,3,7,8-PECDF (M+2)	93.3	85.2	9.1
2,3,4,7,8-PECDF (M+2)	86.1	86.8	0.8
1,2,3,7,8-PECDD (M+2)	88.1	99.5	12.1
1,2,3,4,7,8-HXCDF (M+2)	87.3	93.3	6.6
1,2,3,6,7,8-HXCDF (M+2)	87.7	85.6	2.5
1,2,3,7,8,9-HXCDF (M+2)	92.7	88.4	4.7
2,3,4,6,7,8-HXCDF (M+2)	130.1	198.1	41.4
1,2,3,4,7,8-HXCDD (M+2)	86.1	87.1	1.1
1,2,3,6,7,8-HXCDD (M+2)	97.7	104.0	6.2
1,2,3,7,8,9-HXCDD (M+2)	85.8	59.3	36.6
1,2,3,4,6,7,8-HPCDF (M+2)	176.2	257.7	37.6
1,2,3,4,7,8,9-HPCDF (M+2)	108.8	141.8	26.3
1,2,3,4,6,7,8-HPCDD (M+2)	86.4	116.7	29.8
OCDF (M+2)	39.5	37.9	4.1
OCDD (M+2)	73.2	110.7	42.1

6.3 Volatile Organic Analysis

The volatiles QC samples included blanks (each 12-hour shift), surrogates (each sample), and matrix spike (each matrix except VOST) and matrix spike duplicate (each matrix except VOST). The VOST tubes were conditioned for 12 hours at 180 °C under a flow of pure nitrogen. One set of tubes from each conditioned batch was analyzed by GC/MS to confirm the lack of contamination.

The VOST samples were spiked with the surrogates 1,4-dichloroethane-d4, toluene-d8, and bromofluorobenzene. The target range for VOST recoveries is 50-150%. The surrogate recoveries for each sample are given in the tables in Appendix D. Table 6-14 gives the surrogate recovery for one pair of VOST from each run as an example. Several samples had low recovery of bromofluorobenzene, but this surrogate has a high boiling point and is probably unsuitable as a VOST spiking compound. VOST Audit results are in Table 6-15.

Matrix spikes and duplicates results for VOA incinerator residue samples are presented in Table 6-16 through 6-19. All VOA recoveries except for trichloroethene in caustic were within target limits. The precision as measured by the RPD of the matrix spike and duplicate analyses were better than 20% except for trichloroethene in caustic (RPD - 29%). A review of the data, calculations, and procedures did not find an analytic error leading to these values for trichloroethene. Because this compound was readily measured in other matrices, the poor recovery is attributed to a matrix effect. Surrogate recoveries for liquid VOA samples were within target limits and are in Appendix D.

TABLE 6-14. TYPICAL VOST SURROGATE RECOVERIES

Sample ID	Surrogate Recovery (%)[a] Toluene-d8	1,2-Dichloroethane	Bromfluorobenzene
Run #1 Tenax #3 (3J-1-96	121	86	49
Run #1 Tenax/Charcoal #3 (3J-1-97)	98	96	127
Run # 2 Tenax #2 (3J-2-83)	65	77	5
Run #2 Tenax/Charcoal #2 (3J-2-84)	81	69	109
Run #3 Tenax #3 (3J-3-69)	78	92	2
Run #3 Tenax/Charcoal #3 (3J-3-70)	106	94	119
Run #1 Condensate #3 (3J-1-106)	107	81	107
Run #2 Condensate #2 (3J-2-92)	104	84	104
Run #3 Condensate #3 (3J-3-79)	107	86	105

[a]Target limits 50-150%.

TABLE 6-15. VOST AUDIT RESULTS FOR AUDIT CYLINDER 3AL-2015

Compound	Sample concentration (ng/L)[a]			
	2	3	4	Average
Methylene chloride[b]	ND[c]	14	ND	--
Acetone[b]	5.17	ND	ND	--
Chloroform	70.3	66	63.9	66.7
2-Butanone[b]	14.1	8.6	14.2	--
Carbon tetrachloride	93.9	89.2	98.2	93.8
Benzene	159	146	149	151
Trans-1,3-Dichloropropene	6.91	6.22	6.26	6.46
Tetrachloroethene	497	510	506	504
1,1,2,2-Tetrachloroethane	15.7	15.9	15.5	15.7
Toluene	21.8	13.1	8.42	14.4

[a]Sample 1 was not analyzed because of a leak in the sample train.
[b]Significant levels of these compounds in the blank and no average reported.
[c]ND = Not detected, detection limit ≈5 ng/L.

6.4 Metals Analysis

As a QC protocol for the process samples, the laboratory analyzed blank and spike samples of each matrix. To determine matrix effects on the metal analyses, the samples were spiked with the TCLP metals except for mercury.

Metals spiking results are given in Table 6-20. Low levels of chloride in samples cause insoluble AgCl to form. Samples that contain chloride at low levels will cause poor recovery of Ag. Target limits for metal recovery were 70-130%. The 18% caustic gave consistently low recoveries as did the scrubber brine samples. Except for silver all other recoveries were within 70-130%.

6.5 HCl Analysis

The HCl field spikes are given in Table 6-21. Recoveries were between 83.8 and 108%. The results indicate that the method can detect the spikes adequately with good accuracy.

TABLE 6-16. VOLATILES
QUALITY CONTROL SAMPLES FOR THE LIC RCRA TRIAL BURN
Process Water (Run 2 Post-Test)

Sample No.	Compound	Sample result (μg/L)	Amount added (μg/L)	Matrix spike Found (μg/L)	Matrix spike % Recov.	Matrix spike duplicate Found (μg/L)	Matrix spike duplicate % Recov.	MS/MSD RPD	% Recovery range
3J-2-18/19									
3J-2-18/19MS									
3J-2-18/19MSD	Toluene-d_8[a]				98		100		88-110
Process Water	Bromofluorobenzene[a]				87		95		86-115
Post-Test	1,2-Dichloroethane-d_4[a]				96		110		61-145
	1,1-Dichloroethene	ND[b]	50	45.3	91	47.9	96	5	71-120
	Trichloroethene	ND	50	49.8	100	50.5	101	1	76-127
	Benzene	ND	50	52.8	106	53.7	107	1	76-127
	Toluene	ND	50	53.3	107	50.2	100	7	76-125
	Chlorobenzene	ND	50	50.8	102	48.9	98	13	75-130

[a]Surrogate compound.
[b]ND - Not detected (detection limit - 5 μg/L).

TABLE 6-17. VOLATILES
QUALITY CONTROL SAMPLES FOR THE LIC RCRA TRIAL BURN
Scrubber Brine (Run 2 Post-Test)

Sample No.	Compound	Sample result (μg/L)	Amount added (μg/L)	Matrix spike Found (μg/L)	Matrix spike % Recov.	Matrix spike duplicate Found (μg/L)	Matrix spike duplicate % Recov.	MS/MSD RPD	% Recovery range
3J-2-37/38									
3J-2-37/38MS									
3J-2-37/38MSD	Toluene-d_8[a]				102		101		88-110
Scrubber Brine	Bromofluorobenzene[a]				101		101		86-115
Post-Test	1,2-Dichloroethene-d_4[a]				103		99		61-145
	1,1-Dichloroethene	ND[b]	50	44.8	90	45.0	90	0	71-120
	Trichloroethene	ND	50	46.1	91	47.7	94	3	76-127
	Benzene	ND	50	49.9	100	51.6	103	3	76-127
	Toluene	ND	50	50.4	100	52.7	104	4	76-125
	Chlorobenzene	ND	50	47.8	96	49.5	99	3	75-130

[a]Surrogate compound.
[b]ND = Not detected (detection limit = 5 μg/L).

TABLE 6-18. VOLATILES
QUALITY CONTROL SAMPLES FOR THE LIC RCRA TRIAL BURN
Scrubber Liquor (Run 2 Post-Test)

Sample No.	Compound	Sample result (μg/L)	Amount added (μg/L)	Matrix spike Found (μg/L)	Matrix spike % Recov.	Matrix spike duplicate Found (μg/L)	Matrix spike duplicate % Recov.	MS/MSD RPD	% Recovery range
3J-2-35/36									
3J-2-35/36MS									
3J-2-35/36MSD	Toluene-d_8[a]				99		102		88-110
Scrubber Liquor	Bromofluorobenzene[a]				98		102		86-115
Post-Test	1,2-Dichloroethene-d_4[a]				93		96		61-145
	1,1-Dichloroethene	ND[b]	50	45.8	92	45.6	91	14	71-120
	Trichloroethene	ND	50	46.7	93	46.7	93	16	76-127
	Benzene	ND	50	49.8	100	49.4	99	11	76-127
	Toluene	ND	50	50.1	100	50.1	100	13	76-125
	Chlorobenzene	ND	50	48.0	96	48.1	96	13	75-130

[a]Surrogate compound.
[b]ND - Not detected (detection limit - 5 μg/L).

TABLE 6-19. VOLATILES
QUALITY CONTROL SAMPLES FOR THE LIC RCRA TRIAL BURN
Caustic (Run 2 Post-Test)

Sample No.	Compound	Sample result (μg/L)	Amount added (μg/L)	Matrix spike Found (μg/L)	Matrix spike % Recov.	Matrix spike duplicate Found (μg/L)	Matrix spike duplicate % Recov.	MS/MSD RPD	% Recovery range
3J-2-20/21									
3J-2-20/21MS									
3J-2-20/21MSD	Toluene-d_8[a]				97		97		88-110
Caustic	Bromofluorobenzene[a]				95		95		86-115
Post-Test	1,2-Dichloroethene-d_4[a]				107		112		61-145
	1,1-Dichloroethene	ND[b]	50	55.8	112	58.2	116	4	71-120
	Trichloroethene	ND	50	16.1	32	21.4	43	29	76-127
	Benzene	ND	50	53.1	106	56.2	112	6	76-127
	Toluene	ND	50	51.7	103	52.3	105	2	76-125
	Chlorobenzene	ND	50	50.4	101	51.2	102	1	75-130

[a]Surrogate compound.
[b]ND - Not detected (detection limit - 5 μg/L).

TABLE 6-20. METAL ANALYSIS MATRIX SPIKE RESULTS[a]

Sample ID	Sample No.	Amt spiked µg/mL	As		Se		Cr		Cd		Pb		Ba		Ag	
			Amt found	Rec %	Amt found	Rec %	Amt found	Rec %	Amt found	Rec %	Amt found	Rec %	Amt found	Rec %	Amt found	Rec %
Process Water MS	3J-3-009MS	1.0	1.01	101	0.932	93	0.944	94	1.00	100	0.940	94	0.967	97	0.048	5
Scrubber Liquor MS	3J-2-003MS	1.0	1.02	102	0.958	96	0.976	98	0.999	100	0.957	96	0.987	99	0.331	33
Scrubber Liquor MSD	3J-2-003MSD	1.0	1.07	107	0.961	96	0.979	98	1.02	102	0.969	97	0.986	99	0.443	44
Scrubber Brine MS	3J-3-006MS	1.0	0.699	70	0.355	36	0.634	63	0.579	58	0.660	66	0.615	62	ND[b]	0
Scrubber Brine MSD	3J-3-006MSD	1.0	0.699	70	0.418	42	0.624	62	0.572	57	0.790	79	0.609	61	ND	0
Caustic MS	3J-3-012MS	1.0	0.137	14	0.344	34	0.284	28	0.146	15	0.039	4	0.215	22	0.221	22
Caustic MSD	3J-3-012MSD	1.0	0.573	57	0.434	43	0.336	34	0.176	18	0.039	4	0.293	29	0.316	32
Fuel Oil MS	3J-1-001MS	1.0	1.03	103	1.21	121	1.03	103	1.01	101	1.00	100	1.03	103	0.938	94
Fuel Oil MSD	3J-1-001MSD	1.0	1.10	110	1.29	129	1.12	112	1.10	110	1.05	105	1.12	112	1.01	101
Refractory Salt MS	3J-Salt-2MS	1.0	1.01	101	0.949	95	1.07	107	0.99	99	0.78	78	1.83	183	ND	0
Refractory Salt MSD	3J-Salt-2MSD	1.0	1.10	110	1.06	106	1.20	120	1.04	104	0.85	85	2.01	201	ND	0

[a]Target recovery criteria 70-130% from EPA/625/6-89/023 Handbook QA/QC Procedures for hazardous waste incineration.

[b]ND - Not detected, detection limit for Ag - 0.08 µg/mL.

TABLE 6-21. CHLORIDE SPIKE RESULTS

Sample ID	Sample No.	Chloride Concentration, µg/mL Amount found	Corrected for Blank	Amount spiked	% Recovery
0.1N NaOH					
Blank	3J-1-048	0.451			
Low spike	3J-3-Spk2	0.870	0.419	0.500	83.8
Medium spike	3J-3-Spk1	3.12	2.67	2.50	107
High spike	3J-3-Spk3	239	238	250	95.2
0.1N H_2SO_4					
Blank	3J-1-047	0.180			
Low spike	3J-3-Spk4	0.720	0.540	0.500	108
Medium spike	3J-3-Spk5	2.60	2.42	2.50	96.8
High spike	3J-3-Spk6	225	224	250	89.8

6.6 QA/QC Summary

The results of the QA/QC samples indicate that sample collection and analysis were performed in adherence to method criteria. The results included 100% ± 30% recovery of the surrogate compounds and matrix spikes, RSD ≤ 30% of replicate analyses, analysis of standards that gave calibration curves with correlation coefficients ≥ 0.99, the analysis of appropriate blanks and meeting the tuning criteria for GC/MS analysis. Spike recoveries were adequate in most cases and where recoveries were outside of the expected criteria explanation for the deviation is provided.

The blanks for acid train samples were higher than expected. This is most probably a result of contamination.

The metals blanks contained several of the target metals. Although the highest grade of reagents was used, it was not possible to analyze the reagents prior to use because of the remote location of the sampling site and the necessity to ship reagents directly from suppliers. The metals results do, however, indicate compliance with proposed limits even if results were not corrected for corresponding blanks.

Data and Document Control Center
B087

SRI-APC-92-384-7530.11.1-I-R3

RESULTS OF THE RCRA TRIAL BURN WITH VX FEED FOR THE LIQUID INCINERATOR AT THE JOHNSTON ATOLL CHEMICAL AGENT DISPOSAL SYSTEM

FINAL REPORT

Prepared for

Program Manager for
Chemical Demilitarization
Environmental and Monitoring Division

Project 7530.11.1

RESULTS OF THE RCRA TRIAL BURN WITH VX FEED FOR THE LIQUID INCINERATOR AT THE JOHNSTON ATOLL CHEMICAL AGENT DISPOSAL SYSTEM

FINAL REPORT

Prepared for

PROGRAM MANAGER FOR
CHEMICAL DEMILITARIZATION
ENVIRONMENTAL AND MONITORING DIVISION

SOUTHERN RESEARCH INSTITUTE
2000 Ninth Avenue South
P.O. Box 55305
Birmingham, AL 35255-5305

June 23, 1992
SRI-APC-92-384-7530.11.1-I-R3

RESULTS OF THE RCRA TRIAL BURN WITH VX FEED FOR THE LIQUID INCINERATOR AT THE JOHNSTON ATOLL CHEMICAL AGENT DISPOSAL SYSTEM

Executive Summary

Under Congressional mandate, the Department of the Army must dispose of existing stocks of obsolete chemical-warfare agent munitions. The first fully integrated facility for accomplishing this task is the Johnston Atoll Chemical Agent Disposal System (JACADS). JACADS consists of four incineration systems: the Liquid Incinerator (LIC) for the disposal of liquid agents, the Deactivation Furnace System (DFS) for the disposal of energetic materials, the Metal Parts Furnace (MPF) for the decontamination of metal munitions and metal parts that have been in contact with chemical agents, and the Dunnage Incinerator (DUN) for the disposal of packing material and other dunnage associated with the munitions. JACADS eventually will be used to destroy chemical munitions and storage containers filled with nerve agents (GB and VX) and with sulfur mustard (H and HD).

As part of the initial performance evaluations of the JACADS facility (i.e., operational verification testing, or OVT), Southern Research Institute (SRI), in concert with other subcontractors, coordinated and carried out sampling and sample analyses in conjunction with four incinerator runs that were performed in the LIC facility on March 10 through 17, 1992. The feed material employed in these burns was liquid agent VX [O-ethyl S-(2-diisopropylaminoethyl)methylphosphonothioate], which was considered to be the principal organic hazardous constituent (POHC) for these tests. The purpose of the tests was to show that the LIC could destroy VX efficiently while operating in an environmentally safe manner. This report summarizes the field activities, chemical analyses, and data analyses associated with these tests.

The specific objectives of this project were to:

1. Perform a RCRA (Resource Conservation and Recovery Act) Trial Burn for incineration of VX and decontamination solution on the LIC.

2. Demonstrate that the DRE of VX is 99.99% or greater and that the VX vapor concentration in the stack is below the Allowable Stack Concentration (ASC, equal to 0.0003 mg/m^3).

3. Show that particulate emissions from the exhaust stack do not exceed 180 mg/dscm (0.08 grains per dry standard cubic foot) when corrected to 7% oxygen content in the exhaust gas.

4. Obtain an average hourly combustion efficiency of at least 99.9%. (Carbon monoxide concentration must be no greater than 100 ppm, corrected to 7% O_2, in the exhaust to meet this combustion-efficiency requirement.)

5. Show that the removal efficiency of HCl (hydrogen chloride, or hydrochloric acid) from the exhaust gas by the pollution abatement system (PAS) is 99.9% or greater, or that the HCl emission rate is less than 4 lb/hr.

6. Monitor the LIC exhaust-stack emissions for:
   - O_2 (oxygen)
   - CO_2 (carbon dioxide)
   - Volatile and semivolatile products of incomplete combustion (PICs)
   - Polychlorinated dibenzo-p-dioxins and dibenzofurans (PCDD/F)
   - Trace Metals
   - Total Hydrocarbons

7. Analyze the incinerator liquid-process samples for:
   - Volatile and semivolatile PICs
   - PCDD/F
   - Cl^- (Chloride, soluble)
   - F^- (Fluoride, soluble)
   - PO_4^{-3} (Phosphate, soluble)
   - pH

During each trial burn, samples were collected at various locations within the process to allow the calculation of destruction and removal efficiency (DRE) and removal efficiency (RE) for the RCRA-regulated substances.

The samples collected from the exhaust streams were analyzed for both organic and inorganic products of incomplete combustion (PICs), including volatile compounds, semivolatile compounds [such as polychlorinated dibenzo-(p)-dioxins and dibenzofurans (PCDD/F)], metals, particulate materials, and HCl. In addition, solid and liquid waste samples from the plant were analyzed to identify any hazardous components that were present.

The regulated parameters for the JACADS plant included concentration and DRE for VX, particulate concentration, HCl emission, incinerator temperature, and combustion efficiency. All parameters met the RCRA requirements indicated in the above objectives. Although low levels of volatile and semivolatile PICs were found in the stack emissions, the compounds that were detected were typical of the incineration process. Likewise, the low levels of organics that were found in the waste samples from the plant were also similar to those found in earlier tests at JACADS and at the chemical agent munitions disposal system in Tooele Utah.

Target metals in the stack gases were either not detected or were found at trace levels. In addition, the analyses of waste samples from the LIC indicated that, except for lead and chromium in the scrubber brines of all runs, no metals were present above regulated levels.

TABLE OF CONTENTS

		Page
	Executive Summary	ii
1.	INTRODUCTION	1
1.1	Purpose of the Test Program	1
1.2	Scope of This Report	2
2.	SUMMARY OF DATA	3
2.1	Steady State Operating Conditions	3
2.2	Destruction of Chemical Agent	3
2.3	Particulate Emissions	8
2.4	HCl and HF Emissions	8
2.5	Combustion Efficiency	8
2.6	Analyses of Incinerator-Process Samples for Metals	8
2.7	Products of Incomplete Combustion	10
2.8	Dioxin/Furan	10
2.9	Metals	10
2.10	Total Hydrocarbons	14
2.11	Quality Assurance/Quality Control	14
3.	TEST FACILITY DESCRIPTION	15
3.1	JACADS Description	15
3.2	LIC Description	15
3.3	Agent for RCRA Trial Burn	22
3.4	Sampling Locations	24
3.5	Facility Instrumentation	24
4.	TEST PROCEDURES	28
4.1	Preparation for Testing	28
4.2	Continuous Collection Methods	28
4.2.1	Continuous Emission Monitors	28
4.2.2	Chemical Agent Monitors	28
4.3	Manual Sample-Collection Methods	29
4.3.1	Modified Method Five (MM5)	29
4.3.2	Volatile Organic Sampling Train (VOST)	29
4.3.3	Method Five Acid Train (M5AT)	29
4.3.4	Multiple Metals Train (MMT)	30
4.3.5	Particle Size Distribution	30
4.3.6	Orsat	30
4.3.7	Support Methods	30
4.3.8	Total Hydrocarbons	30
4.4	Trial Burn and Sample Collection Sequence and Procedure	30
4.4.1	Trial Burn Sequence and Procedure	30
4,4,2	Ramp Up Procedure	31
4.4.3	Sample Collection Sequence	32
4.4.4	Sample Collection Procedure	33

(continued)

TABLE OF CONTENTS (continued)

4.5 Sampling Contingency Plan..... 34
4.6 Analysis..... 34
4.6.1 Semivolatile Organic Analysis..... 38
4.6.2 Volatile Organic Analysis..... 40
4.6.3 Anions Analysis..... 41
4.6.4 Metals Analysis..... 41
4.6.5 pH Measurements..... 42
4.6.6 Particulates..... 42

5. TEST RESULTS..... 43
5.1 Introduction..... 43
5.2 Process Data..... 43
5.2.1 Process Data Acquisition and Recording..... 43
5.2.2 Orsat..... 43
5.2.3 Chemical Agent..... 43
5.3 Categories of Analytical Data..... 52
5.3.1 Results from the Determinations of Semivolatile Organics..... 52
5.3.2 Volatile Organic Results..... 59
5.3.3 Anion Determinations..... 82
5.3.4 Metals Analysis..... 82
5.3.5 pH Analysis..... 95
5.3.6 Particulate Measurements..... 95
5.3.7 Particle Size Distributions..... 95
5.4 Chemical Agent - POHC..... 99
5.4.1 Results..... 99
5.4.2 Destruction and Removal Efficiency (DRE)..... 99

6. QUALITY ASSURANCE AND QUALITY CONTROL..... 100
6.1 Background..... 100
6.2 Semivolatile Organic Analysis..... 101
6.3 Volatile Organic Analysis..... 103
6.4 Metals Analysis..... 104
6.5 HCl Analysis..... 116
6.6 QA/QC Summary..... 116

APPENDIX A CHAIN OF CUSTODY..... A-1

APPENDIX B OPERATOR LOGS..... B-1

APPENDIX C PROCESS DATA..... C-1

APPENDIX D SAMPLING DATA..... D-1

APPENDIX E CONTINUOUS EMISSION MONITOR DATA..... E-1

(continued)

TABLE OF CONTENTS (continued)

		Page
APPENDIX F	METCO REPORT	F-1
APPENDIX G	TEST PLAN AND CONTRACT MODIFICATIONS	G-1
APPENDIX H	DIOXIN	H-1
APPENDIX I	GC/MS VOLATILES	I-1
APPENDIX J	GC/MS SEMIVOLATILES	J-1
APPENDIX K	FILTER WEIGHTS ACETONE RESIDUE	K-1
APPENDIX L	ANION ANALYSES	L-1
APPENDIX M	METAL ANALYSES	M-1
APPENDIX N	FIELD NOTEBOOKS	N-1
APPENDIX O	FINAL OPERATIONS TEST PLAN	O-1

LIST OF TABLES

Table		Page
2-1	SUMMARY OF SYSTEM TEST CONDITIONS AND RESULTS	4
2-2	SUMMARY OF HCL AND PARTICULATE EMISSIONS AS MEASURED BY THE METHOD 5 ACID TRAIN	5
2-3	SUMMARY OF PARTICULATE EMISSIONS AS MEASURED BY THE METHOD 5 MULTIPLE METALS TRAIN	6
2-4	CHEMICAL AGENT MONITORING	7
2-5	SAMPLES WITH LEAD AND CADMIUM CONCENTRATIONS ABOVE THE REGULATORY LIMIT	9
2-6	SYSTEM PERFORMANCE FOR VOLATILE PRODUCTS OF INCOMPLETE COMBUSTION	11
2-7	SYSTEM PERFORMANCE FOR SEMIVOLATILE PRODUCTS OF INCOMPLETE COMBUSTION	12
2-8	SYSTEM PERFORMANCE FOR METALS	13
3-1	LIC SAMPLING LOCATIONS	19
3-2	LOCATION OF SAMPLING POINTS FOR METHOD 5 ACID TRAIN	25
3-3	LOCATION OF SAMPLING POINTS FOR MM-5 TRAIN AND STEM	26
3-4	FACILITIES EMISSIONS MONITORING INSTRUMENTATION	27
4-1	SUMMARY OF SAMPLING AND ANALYSIS ACTIVITY	35
5-1	LIC PDAR DATA	44
5-2	PROCESS DATA FROM MANUAL STACK SAMPLING	45
5-3	INTEGRATED ORSAT DATA	50
5-4	COMBUSTION EFFICIENCY RESULTS	51
5-5	MODIFIED METHOD 5 TRAIN CONDITIONS AND RESULTS	53
5-6	DETERMINATION OF TARGET PCDFS/PCDDS IN 5J MM5 TRAIN	55
5-7	DETERMINATION OF TOTAL PCDFS/PCDDS IN 5J MM5 TRAIN	57

(continued)

LIST OF TABLES (continued)

Table		Page
5-8	SEMIVOLATILE RESULTS SUMMARY FOR 5J MM5 TRAIN	60
5-9	DETERMINATION OF TOTAL PCDFS/PCDDS IN 5J PROCESS WATER SAMPLES	62
5-10	DETERMINATION OF TOTAL PCDFS/PCDDS IN 5J SCRUBBER LIQUOR SAMPLES	63
5-11	DETERMINATION OF TOTAL PCDFS/PCDDS IN 5J BRINE SAMPLES	64
5-12	DETERMINATION OF TOTAL PCDFS/PCDDS IN 5J CAUSTIC SAMPLES	65
5-13	DETERMINATION OF TOTAL PCDFS/PCDDS IN 5J FUEL SAMPLES	66
5-14	SEMIVOLATILE RESULTS SUMMARY FOR RUN 5J-1	67
5-15	SEMIVOLATILE RESULTS SUMMARY FOR RUN 5J-2	68
5-16	SEMIVOLATILE RESULTS SUMMARY FOR RUN 5J-3	69
5-17	SEMIVOLATILE RESULTS SUMMARY FOR RUN 5J-4	70
5-18	VOST VOLATILE ORGANICS RESULTS SUMMARY RUN 1	71
5-19	VOST VOLATILE ORGANICS RESULTS SUMMARY RUN 2	73
5-20	VOST VOLATILE ORGANICS RESULTS SUMMARY RUN 3	75
5-21	AQUEOUS VOLATILE ORGANIC RESULTS SUMMARY RUN 4	77
5-22	AQUEOUS VOLATILE ORGANICS SUMMARY	79
5-23	METHOD 5 ACID TRAIN CONDITIONS AND RESULTS	83
5-24	METHOD 5 ACID TRAIN RESULTS	84
5-25	ANION CONCENTRATIONS	86
5-26	METHOD 5 MULTIPLE METALS TRAIN CONDITIONS AND RESULTS	88
5-27	JACADS LIC METAL TRAIN RESULTS	90

(continued)

LIST OF TABLES (continued)

Table		Page
5-28	JACADS LIC METAL ANALYSIS PROCESS SAMPLES	93
5-29	SAMPLE pH	96
6-1	VOST AUDIT RESULTS	104
6-2	MATRIX SPIKE/MATRIX SPIKE DUPLICATE RECOVERY (VOA Analysis)	105
6-3	MATRIX SPIKE/MATRIX SPIKE DUPLICATE RECOVERY (VOA Analysis)	106
6-4	MATRIX SPIKE/MATRIX SPIKE DUPLICATE RECOVERY (VOA Analysis)	107
6-5	MATRIX SPIKE/MATRIX SPIKE DUPLICATE RECOVERY (VOA Analysis)	108
6-6	JACADS PROCESS SAMPLES QC TABLE Fuel Oil Post Test	109
6-7	JACADS PROCESS SAMPLES QC TABLE Caustic Post Test	110
6-8	JACADS PROCESS SAMPLES QC TABLE Scrubber Brine Pretest	111
6-9	JACADS PROCESS SAMPLES QC TABLE Scrubber Liquor Post Test	112
6-10	JACADS PROCESS SAMPLES QC TABLE Process Water Post Test	113
6-11	JACADS DFS AND LIC MMT METALS ANALYSIS QC FRONT HALF	114
6-12	JACADS DFS AND LIC MMT METALS ANALYSIS QC BACK HALF	115

LIST OF FIGURES

Figure		Page
3-1	LOCATION OF JOHNSTON ATOLL RELATIVE TO OTHER ISLANDS	16
3-2	MAP OF JOHNSTON ATOLL	17
3-3	SCHEMATIC DIAGRAM OF THE LIQUID INCINERATOR (LIC)	18
3-4	PROCESS DIAGRAM AND SAMPLING POINTS FOR POLLUTION ABATEMENT SYSTEM (PAS)	21
3-5	MPF, DFS, AND LIC STACK SAMPLE POINT LOCATIONS	23
5-1	LIC OXYGEN CONCENTRATIONS DURING TEST 1	46
5-2	LIC FUEL FLOW DURING TEST 2	47
5-3	LIC FLUE GAS TEMPERATURES DURING TEST 3	48
5-4	LIC OXYGEN CONCENTRATIONS DURING TEST 4	49
5-5	DIFFERENTIAL MASS SIZE DISTRIBUTION FOR LIC VX RCRA TRIAL BURNS 1 THROUGH 4	97
5-6	PARTICLE SIZE DISTRIBUTION ON CUMULATIVE PERCENT BY MASS SMALLER THAN SIZE FOR LIC VX RCRA TRIAL BURNS 1-4	98

LIST OF ACRONYMS

ACAMS	Automatic Chemical Agent Monitoring System
ASC	Allowable Stack Concentration
BTU	British Thermal Unit
CAMDS	Chemical Agent Munitions Disposal System
CEM	Continuous Emission Monitor
CFM	cubic feet per minute
COC	Chain of Custody
DFS	Deactivation Furnace System
DS	Decontamination Solution
DSCM	Dry standard cubic meter (20 °C, 1 ATM)
DRE	Destruction and Removal Efficiency
DSCF	Dry standard cubic foot from DFS (68 °F, 1 ATM)
ECR	Explosion Containment Room
EPA	Environmental Protection Agency
GC/ECD	Gas Chromatography/Electron Capture Detection
GC/MS	Gas Chromatography/Mass Spectrometry
gph	gallons per hour
HDC	Heated discharge conveyer
HpCDD	Heptachlorodibenzodioxin
HpCDF	Heptachlorodibenzofuran
HRGC/HRMS	High Resolution Gas Chromatography/High Resolution Mass Spectrometry
HxCDD	Hexachlorodibenzodioxin
HxCDF	Hexachlorodibenzofuran
in. w.c.	inches water column
JACADS	Johnson Atoll Chemical Agent Disposal System
kscfh	thousands of standard cubic feet per hour
lb/cf	pounds per cubic foot
lb/hr	pounds per hour
LIC	Liquid Incinerator
μg/mL	Microgram per milliliter
MM5	Modified Method 5 Sampling Train
MMT	Multiple Metals Sampling Train
M5AT	Method 5 Acid Train
NDIR	Nondispersive Infrared
ng/m^3	Nanogram per cubic meter
OCDD	Octachlorodibenzodioxin
OVT	Operational Verification Testing
PAS	Pollution Abatement System
PCBs	Polychlorinated Biphenyls
PCDD/F	Polychlorinated Dibenzodioxins/furans
PDAR	Process Data Acquisition and Reporting
PeCDD	Pentachlorodibenzodioxin
PeCDF	Pentachlorodibenzofuran
PM Cml Demil	Program Manager for Chemical Demilitarization
POHC	Principle Organic Hazardous Constituents
ppb	Parts per billion

(continued)

LIST OF ACRONYMS (continued)

ppm	Parts per million
R&D	Research and Development
RCl	Total chlorinated hydrocarbons
RCRA	Resource Conservation and Recovery Act
RSM	Rocket Shear Machine
S/F Tubes	Shipping and Firing Tubes
SRI	Southern Research Institute
SW-846	Test Methods for Evaluating Solid Waste
TCDD	Tetrachlorodibenzodioxin
TCDF	Tetrachlorodibenzofuran
TCLP	Toxicity Characteristic Leaching Procedure
TSCA	Toxic Substances Control Act
UE&C	United Engineers and Constructors
VOA	Volatile Organic Analytes or Analysis
VOST	Volatile Organic Sampling Train

RESULTS OF THE RCRA TRIAL BURN WITH VX FEED FOR THE LIQUID INCINERATOR AT THE JOHNSTON ATOLL CHEMICAL AGENT DISPOSAL SYSTEM

1. INTRODUCTION

1.1 Purpose of the Test Program

Under Congressional mandate, the Department of the Army must dispose of existing stocks of obsolete chemical warfare agent munitions. Accordingly, the Army intends to operate eight facilities throughout the country to dispose of chemical munitions. The chemical-agent contents of most of these munitions are to be thermally destroyed in Liquid Agent Incinerators (LICs) at the various demilitarization sites.

The first fully integrated demilitarization facility, the Johnston Atoll Chemical Agent Disposal System (JACADS), was constructed at Johnston Atoll in the Pacific. JACADS was constructed for the full-scale demilitarization of chemical munitions and storage containers and for the destruction of nerve agents (GB and VX) and mustard agents (H and HD). Combustion facilities at JACADS are: the LIC, the Deactivation Furnace System (DFS), the Dunnage Incinerator (DUN), and the Metals Parts Furnace (MPF).

The Army has scheduled operational verification testing (OVT) at the JACADS facility. The completion of the OVT at Johnston Atoll is pivotal because, by Congressional Order, no chemical-agent disposal may be conducted at any Army storage facility except the Chemical Agent Munitions Disposal System (CAMDS) located at Tooele Army Depot in Tooele, Utah, until the completion of the performance evaluation at Johnston Atoll.

In partial fulfillment of the OVT requirements, one trial burn, consisting of four test runs, was performed in the LIC at JACADS beginning March 10, 1992, and ending March 17, 1992, with liquid agent VX and decontamination solution (DS) as the feed material. This trial burn was conducted to demonstrate compliance with the Resource Conservation and Recovery Act (RCRA) during the destruction of VX in the LIC. This document is the report from the trial burns. This report was prepared by Southern Research Institute (SRI) for the Program Manager for Chemical Demilitarization (PM Cml Demil). The work described here was carried out by SRI under subcontract to United Engineers and Constructors (UE&C) as a part of their prime contract (DACA87-86-C-0098) with PM Cml Demil.

Throughout these tests, the LIC was evaluated against RCRA-specified performance criteria. These system-performance criteria pertained to the destruction and removal efficiency (DRE) of the principal organic hazardous constituent (POHC); the emission from the exhaust stack of particulate matter, carbon monoxide, and acid gas; the characteristics of the combustion residue; and the various parameters relating to furnace operation. The pertinent criteria may be summarized as follows:

- The DRE of VX must be 99.99% or greater, and VX concentration in the stack must be below the Allowable Stack Concentration (ASC, equal to 0.0003 mg/m^3).

- Particulate emissions from the exhaust stack must not exceed 180 mg/dscm (0.08 grains per dry standard cubic foot) when corrected to 7% oxygen content in the exhaust gas.

- The average hourly combustion efficiency must be greater than 99.9%. (Carbon monoxide concentration must be no greater than 100 ppm, corrected to 7% O_2, in the exhaust to meet this combustion-efficiency requirement.)

- The removal of HCl (hydrogen chloride, or hydrochloric acid) from the exhaust gas by the PAS must be 99.9% or greater, or the HCl emission rate must be less than 4 lb/hr.

In addition, there was a requirement to carry out the following:

- Monitor the LIC exhaust-stack emissions for:
  - O_2 (oxygen)
  - CO_2 (carbon dioxide)
  - Volatile and semivolatile products of incomplete combustion (PICs)
  - Polychlorinated dibenzo-p-dioxins and dibenzofurans (PCDD/F)
  - Trace Metals
  - Total Hydrocarbons

- Analyze the incinerator liquid process samples for:
  - Volatile and semivolatile PICs
  - PCDD/F
  - Cl^- (Chloride, soluble)
  - F^- (Fluoride, soluble)
  - PO_4^{-3} (Phosphate, soluble)
  - pH

1.2 Scope of This Report

This report presents the test procedures and results for the VX trial burn (i.e., four test runs) in the LIC at JACADS, as well as the findings from the concomitant evaluation of the associated pollution abatement system (PAS).

The sampling team included two sampling coordinators and a chemist from SRI and an eight-member sampling crew. The sample analyses for organics and inorganics were performed by SRI in SRI's Birmingham laboratories. METCO Environmental was a subcontractor to SRI to perform some of the field activities. Observers were present from the Environmental Protection Agency (EPA), PM Cml Demil, Southwest Research Institute (SwRI), and UE&C (United Engineers and Constructors).

2. SUMMARY OF DATA

A summary of LIC system performance relative to RCRA criteria is presented in Table 2-1. Four manual sampling trains were used to quantify stack-gas emissions. These were: an EPA Modified Method 5 (MM5) Train for sampling semivolatile organic compounds and PCDD/F; an EPA Method 5 acid train (M5AT) for sampling HCl, HF (hydrogen fluoride, or hydrofluoric acid), and particulate; an EPA Method 5 Multiple Metals train (MMT) for sampling metals and particulate matter; and an EPA volatile organics sampling train (VOST) for collecting volatile organic compounds. Also, the particle-size distribution of the particulate matter in the stack gas was measured by inertial separation with a cascade impactor. Bulk gas concentrations of O_2, CO, CO_2 were determined manually by Orsat analysis. In addition, continuous emission monitoring systems (CEMs) were used to provide data on O_2 and CO concentrations. VX vapor was monitored with the Automatic Continuous Air Monitoring System (ACAMS), which is an automated gas chromatograph that is designed to analyze chemical agents GB, VX, and HD.

Some of the operating conditions and results for the M5AT and MMT are presented in Tables 2-2 and 2-3. All sampling trains passed the required pretest and post-test leak checks.

2.1 Steady-State Operating Conditions

The average temperature of the Primary Chamber exhaust during each burn was between 2676 and 2730 °F. The average Secondary Chamber exhaust temperature during each run was between 1985 and 2064 °F. The nominal feed rate of VX during the tests was 700 lb/hr. The actual average VX feed rate for the four test runs ranged from 696 to 700 lb/hr. The average decon solution (DS) flow rate ranged from 3.09 to 3.34 gal/min.

2.2 Destruction of Chemical Agent

Stack emissions of VX were not detected during the LIC trial burn. The stack was monitored both in the stack house and at the blower duct. The sensitivity (Limit of Quantitation) of the VX monitoring system, i.e., the ACAMS, was less than one fifth of the Allowable Stack Concentration (ASC) for VX (0.0003 mg/m^3) in all four tests. Based on this level of capability, the actual level of VX that could have been detected was below 0.00006 mg/m^3. More than one ACAMS was used to monitor the stack. These are located at the blower (1 ACAMS) and the exhaust stack (2 ACAMS operated one at a time with the other as a standby system).

The analyses conducted during the emissions testing of the LIC with a nominal agent-feed rate of 700 lb/hr verified the destruction of VX within the LIC, as indicated in Table 2-4.

The DRE for VX in each of the four test runs was greater than 99.9999997%. This result was substantially better than the RCRA requirement of at least 99.99% DRE for VX. The DRE calculations are given in Section 5-~~8~~.4

TABLE 2-1. SUMMARY OF SYSTEM TEST CONDITIONS AND RESULTS

Parameter	Units	Burn TR1	TR2	TR3	TR4	Requirement
VX Feed Rate	lb/hr	696	700	699	699	
Decon Feed Rate	gpm	3.03	3.31	3.34	3.19	
VX Concentration	mg/m^3	ND	ND	ND	ND	<.0003
Incinerator	°F					
Primary Exhaust		2676	2705	2721	2730	2700 ± 150
Secondary Exhaust		1985	1982	2064	1986	2000 ± 150
Combustion Efficiency	%	99.97	99.97	99.96	99.96	≥99.9
DRE - VX	%	>99.9999997	>99.9999997	>99.9999997	>99.9999997	≥99.99
Particulate Matter						
corrected to 7% O_2[a]	mg/dscm	3.05	10.4	3.32	2.69	<180
corrected to 12% CO_2	mg/dscm	4.02	13.7	4.37	3.54	
HCl Emissions	NA[b]	NA	NA	NA	NA	<4
Oxygen[c]	%	15.1	15.0	14.8	14.7	
Carbon Dioxide[c]	%	3.8	4.0	4.1	4.3	

[a]Average of M5AT and M5MMT results.

[b]NA - Not applicable, no HCl was detected and no emission rate could be calculated.

[c]Orsat values (at the stack).

TABLE 2-2. SUMMARY OF HCL AND PARTICULATE EMISSIONS AS MEASURED BY THE METHOD 5 ACID TRAIN

Parameter	Units	TR 1	TR 2	TR 3	TR 4
Date	--	3/10/92	3/11/92	3/15/92	3/16/92
Sample Time[a]	minutes	120	120	120	120
Sample Volume	dscf	68.106	72.413	75.933	70.669
Stack Gas Flow Rate	dscfm	7865	7643	7540	7575
Stack Gas Temperature	°F	188	188	192	189
Stack Gas Moisture	%	32.1	32.4	37.3	35.6
Percent Isokinetic		91.3	100.2	106.2	96.8
HCl Concentration	mg/dscm	<0.876	<0.870	<0.874	<0.939
HCl Emission Rate	lb/hr	NA[b]	NA	NA	NA
HF Concentration	mg/dscm	<0.586	<0.580	<0.581	<0.625
HF Emission Rate	lb/hr	NA	NA	NA	NA
Part. Concentration					
7% O_2	mg/dscm	1.61	19.1	2.52	2.45
12% CO_2	mg/dscm	2.12	23.8	3.09	3.07

[a]Acid train sampling took place over the first 2 hours of each 4-hour trial burn

[b]NA - Not applicable, no HCl was detected and no emission rate could be calculated.

TABLE 2-3. SUMMARY OF PARTICULATE EMISSIONS AS MEASURED BY THE METHOD 5 MULTIPLE METALS TRAIN

Parameter	Units	TR 1	TR 2	TR 3	TR 4
Date	--	3/10/92	3/11/92	3/15/92	3/16/92
Sample Time[a]	minutes	72	72	72	72
Sample Volume	dscf	52.667	60.488	55.060	56.469
Stack Gas Flow Rate	dscfm	7445	7321	7012	6779
Stack Gas Temperature	°F	188	188	190	191
Stack Gas Moisture	%	32.8	34.1	33.8	38.4
Percent Isokinetic		90.0	105.1	102.5	106.0
Part. Concentration					
7% O_2	mg/dscm	4.49	1.65	4.11	2.93
12% CO_2	mg/dscm	5.93	2.10	5.10	3.66

[a]The Multiple Metals Train sampling took place during the second two hours of the 4-hour trial burns.

TABLE 2-4. ACAMS QUANTITATION LIMITS
(ASC Units[a])

	TR 1	TR 2	TR 3	TR 4
Date	3-10-92	3-11-92	3-15-92	3-16-92
LIC Blower Duct				
Station 15 ACAMS 88-05-154	0.19	0.14	0.17	0.17
Stack				
Station 18A ACAMS 90-03-198	0.17	0.18	0.20	0.19
Station 18B ACAMS 88-05-151	0.14	0.14	0.20	0.22

[a]Multiple of ASC (0.0003 mg/m^3).

2.3 Particulate Emissions

Data from the M5AT and MMT were used to calculate particulate emissions. Particulate concentrations (corrected to 7% O_2) in the four LIC VX test runs were, respectively, 1.61, 19.1, 2.52, and 2.45 mg/dscm from the M5AT results and 4.49, 1.65, 4.12, and 2.93 mg/dscm from the MMT results. Hence, the LIC particulate-emission levels were well below the RCRA particulate limit of 180 mg/dscm at an oxygen content of 7%. The corresponding measured particulate concentrations after correction of the data to 12% CO_2 (this is not a RCRA requirement but is required as an alternative manner of reporting particulate results by certain state agencies) were 2.12, 23.8, 3.09, and 3.07 mg/dscm from the M5AT and 5.93, 2.10, 5.10, and 3.66 mg/dscm from the MMT.

The particle-size distribution, as measured through all four tests, was found to be bimodal, with about 80% of the particulate matter in a mode centered at about 0.5 μm and the remaining 20% in a mode centered at about 5 μm. The very low particulate concentrations in the stack gases precluded making individual measurements for each test.

2.4 HCl and HF Emissions

No HCl was detected in the stack gas (detection limit, <0.03 lb/hr). The allowable limit for HCl emission is 4 lb/hr. Thus, the HCl emission rate for each run was well under the limit. No HF was detected in the stack gas (detection limit, <0.02 lb/hr).

2.5 Combustion Efficiency

Combustion efficiency (CE) was calculated from the amounts of CO and CO_2 in the stack gas according to equation 2.1:

$$\% \text{ CE} = \frac{[CO_2]}{[CO_2] + [CO]} \times 100\% \qquad 2.1$$

The hourly combustion efficiencies for the trial burns ranged from 99.96% to 99.97%. These combustion efficiencies satisfied the regulatory requirement of 99.9% for this parameter.

2.6 Analyses of Incinerator-Process Samples for Metals

The process water, scrubber brine, scrubber liquor, and caustic solution were analyzed for arsenic, barium, cadmium, chromium, lead, selenium, silver, nickel, tin, thallium, antimony, zinc, cobalt, vanadium, beryllium, copper, and mercury. These process media are contained within the loops of the PAS; the sampling locations are listed in Table 3-1. Lead concentrations above the regulatory limits were present in two of the scrubber-brine samples, as shown in Table 2-5. Moreover, the scrubber-brine samples indicated a

TABLE 2-5. SAMPLES WITH LEAD AND CADMIUM CONCENTRATIONS ABOVE THE REGULATORY LIMIT

No.	Sample ID	Sample No.	Concentration of lead found, mg/L	Regulatory limit, lead found, mg/L	Concentration of chromium found, mg/L	Regulatory limit, chromium found, mg/L
1	Scrubber Brine Pretest	5J-1-11	NA[a]	5.0	20.1	5.0
1	Scrubber Brine Post Test	5J-1-46	NA[a]	5.0	8.23	5.0
2	Scrubber Brine Pretest	5J-2-11	NA[a]	5.0	17.4	5.0
2	Scrubber Brine Post Test	5J-2-39	NA[a]	5.0	14.0	5.0
3	Scrubber Brine Pretest	5J-3-11	NA[a]	5.0	45.9	5.0
3	Scrubber Brine Post Test	5J-3-38	NA[a]	5.0	14.7	5.0
4	Scrubber Brine Pretest	5J-4-11	42.6	5.0	32.7	5.0
4	Scrubber Brine Post Test	5J-4-39	39.2	5.0	45.1	5.0

[a]Not above regulatory limits.

concentration of chromium above 5 mg/L. All other process samples were within the regulatory limits for all parameters tested. The levels of all detected metals were similar in both the pretest and post-test samples, indicating that incineration did not contribute metals to the process. Duplicate analysis indicate that these levels are probably indistinguishable.

2.7 Products of Incomplete Combustion

Volatile PICs (Table 2-6) found during the LIC trial burn were similar in analyte makeup but were generally slightly higher in concentration than those found during previous blank fuel-oil burns conducted on the DFS and LIC in 1989 [Volatile and Semivolatile Emission Test on JACADS Liquid Incinerator System (Blank Fuel Oil Burn) Sept. 29, 1989, Southwest Research Institute Project 01-1301-548]. The aromatic hydrocarbons that were found -- benzene, styrene, xylene, toluene, and ethyl benzene -- may have been from the Tenax that was used to sample the stack. Acetone, 2-butanone, and toluene in Run 2 are also common solvents found in many plants and laboratories. Bromoform and dibromochloromethane are common products of water purification and are introduced into the system through process water. The high levels of toluene in Runs 2-4 VOST condensates were probably caused by contamination of the water used to complete the filling of the VOA vials.

Semivolatile PICs (Table 2-7) consisted primarily of methyl phenols and phthalates and were found at similar levels during blank fuel-oil burns conducted on the DFS and LIC systems during 1989. Benzoic acid, benzyl alcohol and naphthalene were detected and were probably contributed by the XAD-2 resin.

All compounds that were found were related to the fuel oil used to fire the system and were thus entirely consistent in character and concentration with the gases and vapors that are emitted during any other typical fossil-fuel combustion operation.

2.8 Dioxin/Furan

No dioxins were detected in the stack at levels significantly above those associated with the blank samples. Traces of heptachlorodibenzofuran were in the blanks and several of the samples. This may be a contaminant in the field spiking solution. No 2,3,7,8-TCDD/F were detected in any of the samples.

2.9 Metals

Metals (Table 2-8) emissions from the LIC were limited to the analytes that were expected (Cr, Sn, B, P, Zn, Co, Mn, Cu) given the acidic gas stream and the duct composition. The concentrations of these substances were well below the corresponding guidance limits (Guidance on Metals and Hydrogen Chloride for Hazardous Waste Incinerators. Vol. IV of the Hazardous Waste Incineration Guidance Series, Draft, March 1989, USEPA-OSW).

7/10/92

TABLE 2-6. SYSTEM PERFORMANCE FOR VOLATILE PRODUCTS OF INCOMPLETE COMBUSTION

Emitted substances[b]		Concentration, $\mu g/m^3$[a]			
		Run 1	Run 2	Run 3	Run 4
Volatile Organics	Benzene	2.7	3.2	5.3	9.3
	Acetone	ND[c]	38.1	ND	ND
	2-Butanone	51	64	55	86
	Xylenes	2.2	2.6	3.6	2.8
	Bromoform	2.6	0.8	2.8	1.5
	Toluene	ND	2.55	ND	ND
	Dibromochloro-methane	0.4	ND	ND	ND
	Ethyl Benzene	0.4	0.7	0.9	0.6

[a]Reported with two significant figures if greater than 1 $\mu g/m^3$ and one significant figure if less than 1 $\mu g/m^3$.
[b]Value blank corrected.
[c]ND = Not detected, 0.2 $\mu g/m^3$ for volatile organics.

7/10/82

TABLE 2-7. SYSTEM PERFORMANCE FOR SEMIVOLATILE PRODUCTS OF INCOMPLETE COMBUSTION

Emitted substances[b]		Concentration, $\mu g/m^3$[a]			
		Run 1	Run 2	Run 3	Run 4
Semivolatile Organics	2-Methylphenol	26	23	14	25
	4-Methylphenol	19	20	14	21
	Dimethylphthalate	7.2	8.7	9.8	6.7
	bis(2-Ethylhexyl)-phthalate	10	11	4.2	6.3
	Benzyl alcohol	320	130	220	530
	Benzoic acid	ND[c]	83	88	110
	Naphthalene	ND	ND	1.4	1.8

[a]Reported with two significant figures if greater than 1 $\mu g/m^3$ and one significant figure if less than 1 $\mu g/m^3$.
[b]Value blank corrected.
[c]ND = Not detected, 2.8 $\mu g/m^3$ for semivolatile organics.

7/10/92

TABLE 2-8. SYSTEM PERFORMANCE FOR METALS

Emitted substances[b]		Concentration, $\mu g/m^3$[a]			
		Run 1	Run 2	Run 3	Run 4
Metals	Chromium	1.7	1.4	1.5	1.8
	Tin	17	33	29	13
	Boron	ND[c]	1.1	ND	282
	Phosphorous (as P)	42	73	84	280
	Zinc	6.6	32	29	35
	Manganese	720	48	3.0	320
	Copper	0.5	4.4	0.7	4.8

[a]Reported with two significant figures if greater than 1 $\mu g/m^3$ and one significant figure if less than 1 $\mu g/m^3$.
[b]Value blank corrected.
[c]ND = Not detected.

2.10 Total Hydrocarbons

The average total hydrocarbon concentration was measured by EPA Method 25A (expressed as propane) to be 2 ppm or less for each trial burn.

2.11 Quality Assurance/Quality Control

All data were judged to be representative based on the quality control (QC) data obtained. This QC data included analyte recoveries, train-performance data, sample-tracking records, and custody documentation. Details can be found in Section 6. All samples that were successfully collected were analyzed, and no losses, except for one broken Tenax/charcoal sample and one Tenax/charcoal blank that was lost because of computer malfunction, were experienced in custody transfer, shipping, laboratory preparation, or analysis.

Recoveries of surrogate spikes and matrix spikes typically were within the expected ranges. In instances where a spike was outside the recommended range, an evaluation of other QC data pertinent to the sample analysis invariably affirmed that the data were of acceptable quality. The following conclusions concerning data quality can be drawn for the analyte groups within the various matrices:

- Volatile, semivolatile, and PCDD/F surrogate recoveries were within method limits.

- The results for volatile and semivolatile organic-compound matrix spikes for the incinerator-process samples were generally within the method advisory limits. Some recoveries outside the advisory limits were observed in the semivolatile analyses and were probably a result of matrix effects. PCDD/F matrix-spike results for the incinerator-process samples were within applicable method limits.

- Instrument tuning, calibration, and internal-standard recoveries met criteria for all volatile and semivolatile assays. In some cases, the daily-continuing-calibration acceptance criteria for some PCDD/PCDF compounds were slightly out of range, however, no PCDDs or PCDFs of that type were detected in any of the samples on those days.

- HCl recoveries from matrix spikes and blind field spikes were all within the acceptable limits of the applicable methods.

- For most inorganics in most sample media, the results for metal matrix spikes and duplicate samples were within acceptable limits as established by the applicable methods. As anticipated, samples that contained chloride gave low recovery of silver, and the 18% caustic samples gave low recoveries for all metals. Barium gave poor recoveries from samples. Samples that contain sulfate will cause barium to precipitate and not be recovered.

3. TEST FACILITY DESCRIPTION

3.1 JACADS Description

Figure 3-1 shows the location of Johnston Atoll in the central Pacific Ocean. This atoll is quite isolated from populated islands in the region. It is about 825 miles southwest of the Hawaiian Islands, 900 miles northwest of Palmyra Island, 1350 miles north of Howland Island, and 940 miles southeast of Midway Island. The closest land to Johnston Atoll is the French Frigate Shoals, about 530 miles away. Figure 3-2 illustrates the general layout of Johnston Island, the principal island of four on the atoll. All four of the islands are wholly or largely manmade, with Johnston Island being about 2 miles long by 1/2 mile wide. The LIC is contained within the JACADS facility area shown in Figure 3-2.

The overall JACADS treatment process is based on the destruction of toxic agents by incineration. The initial munitions-processing step includes the removal of explosives and draining of the toxic agent. The DFS processes drained rockets and mines, explosives and propellants that have been removed from cartridges and projectiles. The MPF thermally decontaminates all drained ton containers and drained munitions (with their explosives and propellants removed) other than rockets and mines. The drained toxic agents are burned in the LIC, possibly along with spent decontamination solution. The DUN burns contaminated and uncontaminated dunnage.

Flue gases from the DFS, the MPF, and the LIC are scrubbed by a PAS. The DUN has a dry flue gas cleaning system; the other systems are wet. The scrubber liquid from the wet scrubbers is fed to dryers to reduce the brine to a dry salt.

3.2 LIC Description

The LIC is designed to destroy liquid chemical agents (GB, VX, HD) and spent decontamination solutions. But two or more agents will not be blended; each agent will be processed during a separate "campaign", with complete facility cleanup between each agent type. Figure 3-3 illustrates the principal components of the LIC system. Sampling locations are described in Table 3-1. The LIC consists of two refractory-lined combustion chambers, followed by a quench system and a PAS. Liquid agent is introduced into the Primary Incineration Chamber and then into a Secondary Incineration Chamber, where the destruction of the agent is completed. Liquid decontaminant solutions are thermally destroyed by introducing them into the secondary chamber. The primary chamber is fueled by the agent itself with auxiliary heat input from JP5. The primary chamber exhaust-gas temperature is nominally 2700 °F. The parameters measured are:

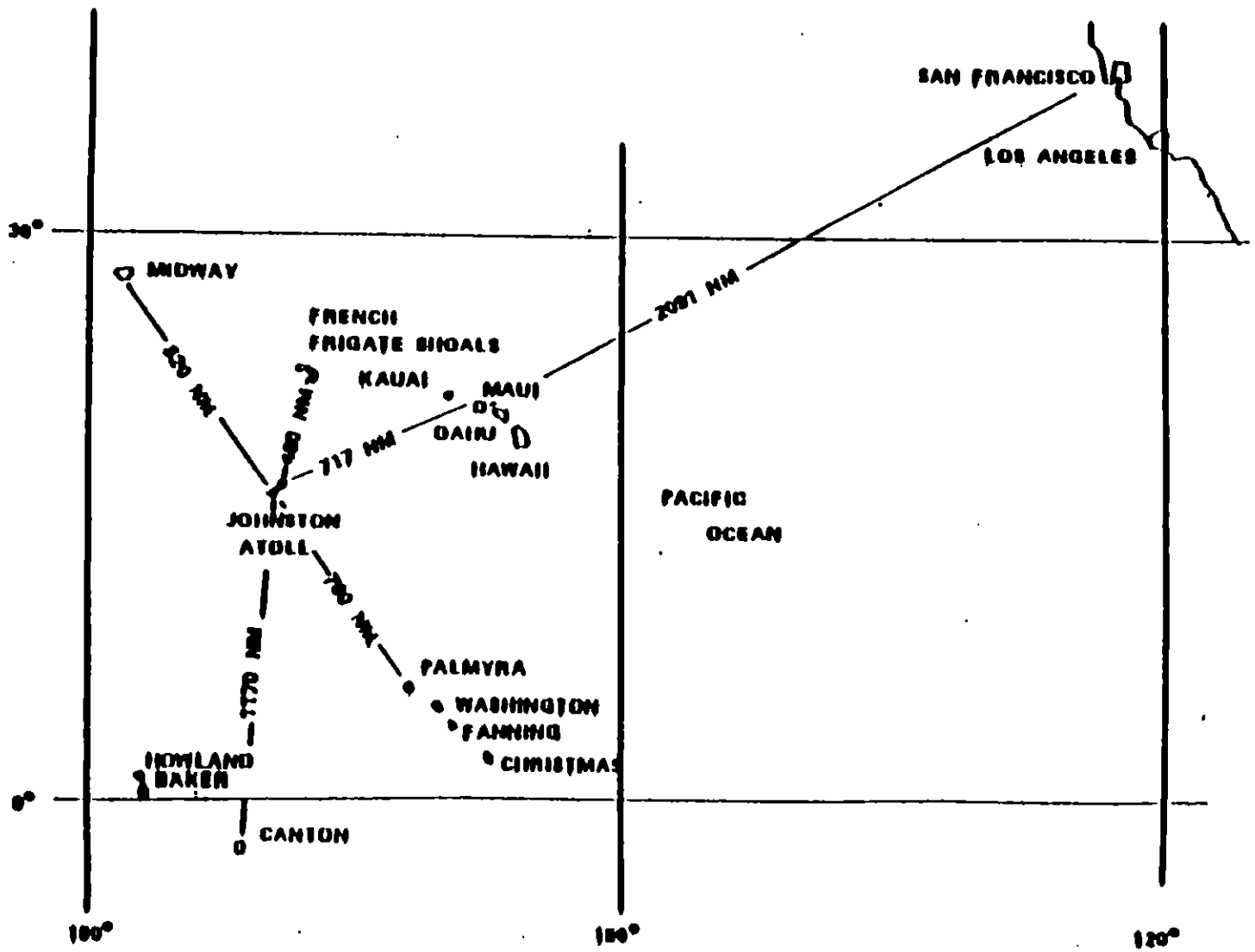
SAN FRANCISCO
LOS ANGELES
30°
MIDWAY
FRENCH
FRIGATE SHOALS
KAUAI
MAUI
OAHU
HAWAII
2091 NM
717 NM
JOHNSTON
ATOLL
PACIFIC
OCEAN
PALMYRA
WASHINGTON
FANNING
CHRISTMAS
HOWLAND
BAKER
1770 NM
0°
CANTON
100°
150°
120°

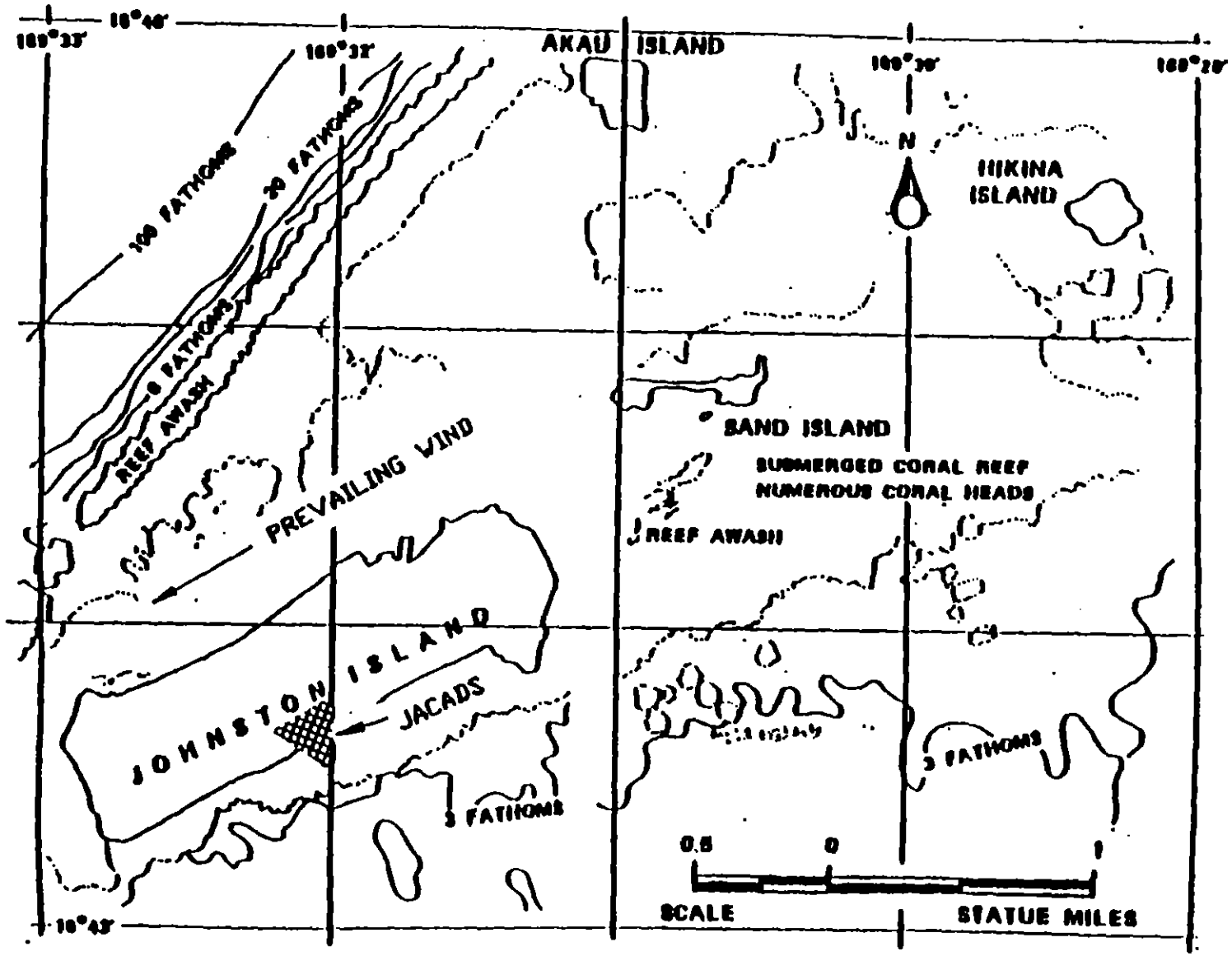

Figure 3-2. MAP OF JOHNSTON ATOLL

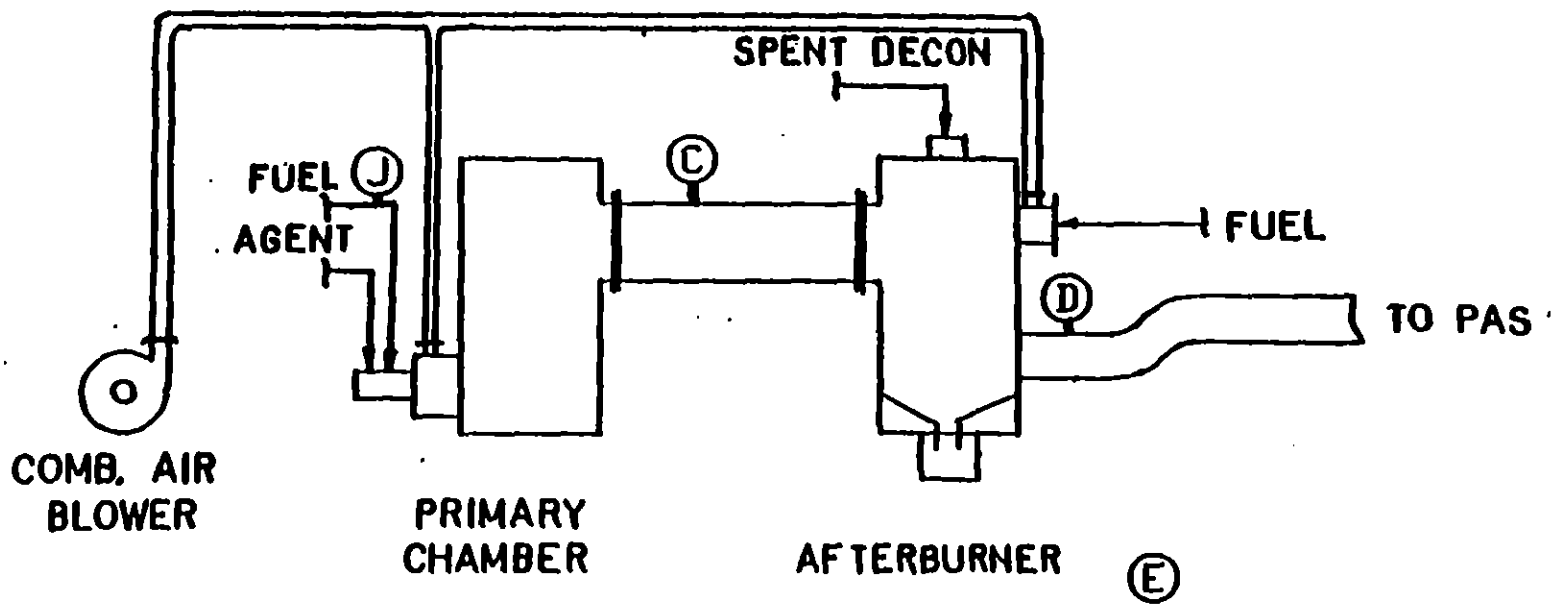

Figure 3- 3. Schematic Diagram of the Liquid Incinerator (LIC)

TABLE 3-1. LIC SAMPLING LOCATIONS

Site from Figure 3-5	Location on Figure 3-4 and Figure 3-5	Matrix	Sampling Method
B	Stack Platform	Stack Exhaust	M5 Acid train Particulate M5 Metals train Particle Size
A	Common House	Stack Exhaust	ACAMS Modified M5 VOST CEM NOX THC (25A)
2	LIC	Blower Duct Exhaust	CEM
4	LIC	Blower Duct Exhaust	CEM
Not in figure	Valve in Brine supply pump exit line, LIC valve 896	Brine	Grab
Not in figure	Caustic Makeup LIC valve 312	Caustic	Grab
Not in figure	Valve in Liquor supply pump exit line, LIC valve 901	Scrubber Liquor	Grab
Not in figure	Process Water LIC valve 346	Water	Grab
Not in figure	Fuel Oil LIC valve 332	Fuel Oil	Grab

fuel flow
agent flow
combustion-air flow
propane flow
exhaust-gas temperature
wall temperature
pressure
exhaust O_2 concentration

The secondary chamber is fueled by JP5 and has a nominal exhaust-gas temperature of 2000 °F. The parameter monitored for the secondary chamber are:

fuel flow
water/decon solution flow
propane flow
combustion-air flow
exhaust-gas temperature
exhaust O_2 concentration
exhaust CO concentration

In addition, the ventilation-air temperature is logged continuously in the furnace room.

Combustion gases from the secondary chamber pass through a PAS for discharge to the atmosphere. The PAS is illustrated in Figure 3-4.

A general description of the PAS subsystems and their function is provided below:

(a) The quench tower cools the exhaust gases before they enter the venturi scrubber. Clear water or scrubber brine from the packed tower sump is sprayed into the quench tower to reduce the temperature of the flue gas. The operating parameters pertaining to the quench tower that are monitored are:

inlet-gas temperature
brine flow rate
exhaust-gas temperature

(b) The venturi scrubber is a variable-plug throat design. Scrubber brine from the packed tower sump is injected into the top of the venturi. Brine droplets formed in the venturi collect particulate matter principally by collision, and neutral salts are formed from acid gases such as HCl and HF by reaction with the caustic in the brine. The venturi scrubber is designed to remove 95% of all particles larger than 0.5 microns. The parameters monitored in the venturi are:

brine flow rate
pressure drop

The brine pH and the brine density are monitored at the scrubber sump pump discharge line.

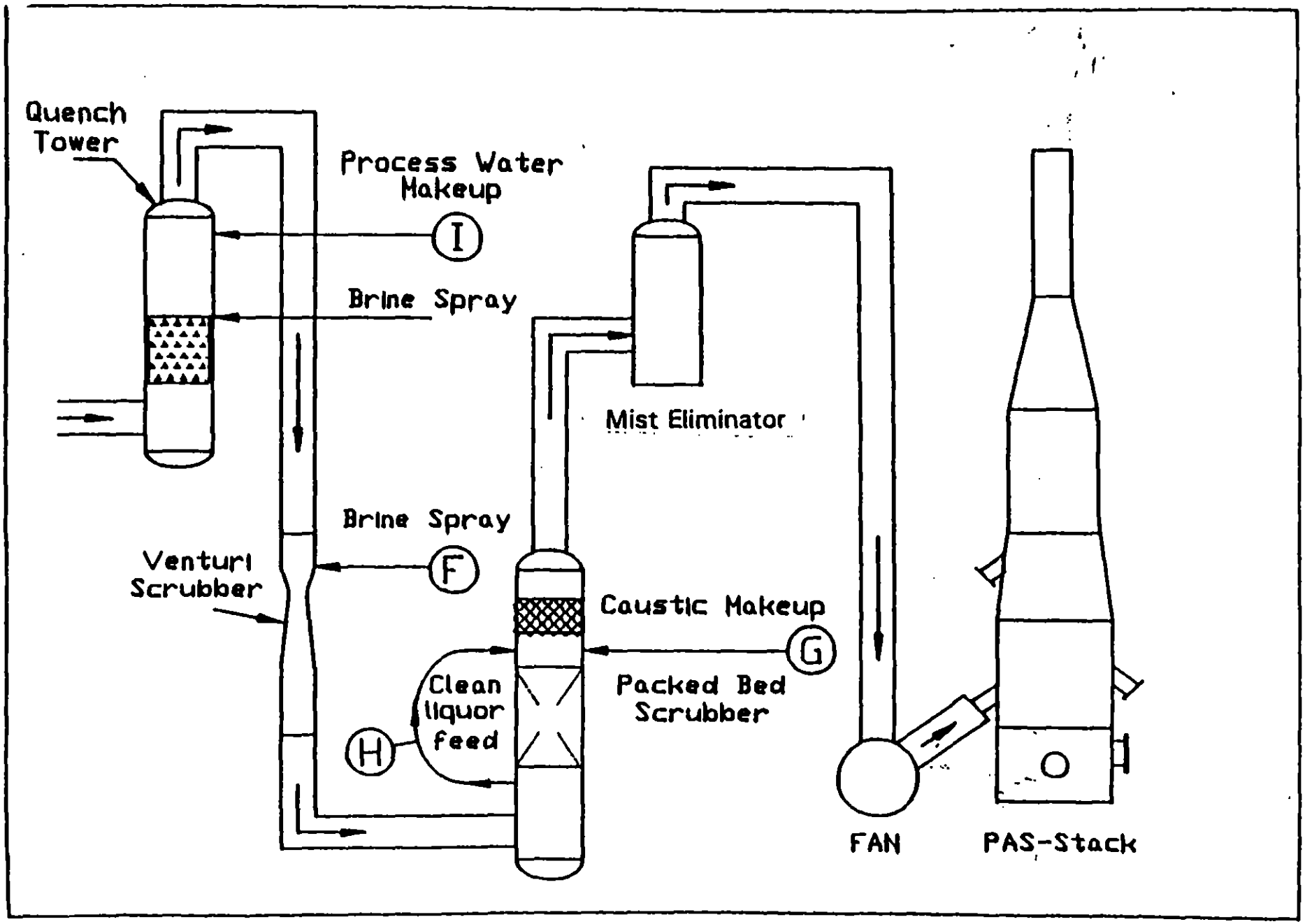

Figure 3-4. Process Diagram and Sampling Points for Pollution Abatement System (PAS)

(c) The packed-bed scrubber tower is designed to provide at least 95% sulfur dioxide removal. The packed bed consists of stainless steel rings. Clear liquor is used to irrigate the packed-bed section of the tower, and acid-gas removal is effected in the packed bed by reaction of the acidic gases with caustic in the clear liquor. Sensors are available to monitor the following packed-bed parameters:

liquor flow rate
liquor pH
liquor density
pressure drop

(d) The mist eliminators remove liquid carryover from the packed bed. They also remove the fine H_3PO_4 mist that is formed when gas laden with P_2O_5 is cooled with water. The P_2O_5 is produced by the incineration of chemical agents VX or GB. The pressure drop across the demisters is continuously monitored.

(e) The induced-draft fan moves the exhaust gases through the PAS. Dampers control the flow to maintain a pressure in the LIC that is lower than the pressure of the surrounding atmosphere, i.e., a negative-pressure condition. The electrical current drawn by the fan is monitored continuously.

(f) A 100-ft stack serves to exhaust the clean gases to the atmosphere. This stack is of varying diameter due to its function as the end system for three of the four incinerators/kilns. This is the only PAS subsystem in the JACADS facility that is common to all three incinerators. Figure 3-5 illustrates the stack, and the letters and numbers on the figure indicate the sampling locations described in Table 3-1. The stack parameters that are monitored continuously are CO, O_2, NO_x, SO_x, and chemical-agent concentration, which is monitored by ACAMS.

The LIC waste streams include the stack exhaust gas, the scrubber brines, and the refractory slag. The scrubber brines are moved through a holding tank before they are processed in moisture-removal and salt-drumming operations. The refractory slag is generated continuously, and is removed on a periodic basis and drummed for appropriate disposal. No refractory slag was collected during these tests. The length of these tests did not allow for collection of the slag before the sampling was completed.

3.3. Agent for RCRA Trial Burn

Agent VX was the material that was incinerated during this trial burn. There were no POHCs from 40CFR261, Appendix VIII, in any of the materials fed into the LIC. However, VX is a toxic chemical compound and is, therefore, an appropriate candidate material for designation as a POHC. VX was the selected POHC for this trial burn.

The chemical name for VX is O-ethyl S-(2-diisopropylaminoethyl) methylphosphonothioate ($C_{11}H_{26}NO_2PS$, M.W. = 267). It has a specific gravity of 1.01 (liquid) relative to water at 25 °C and 9.2 (vapor) relative to air, a specific heat of 110 cal/mole/°C , a boiling point of 298 °C, a heat of vaporization of 21.6 kcal/mole at 25 °C, and a heat of combustion of

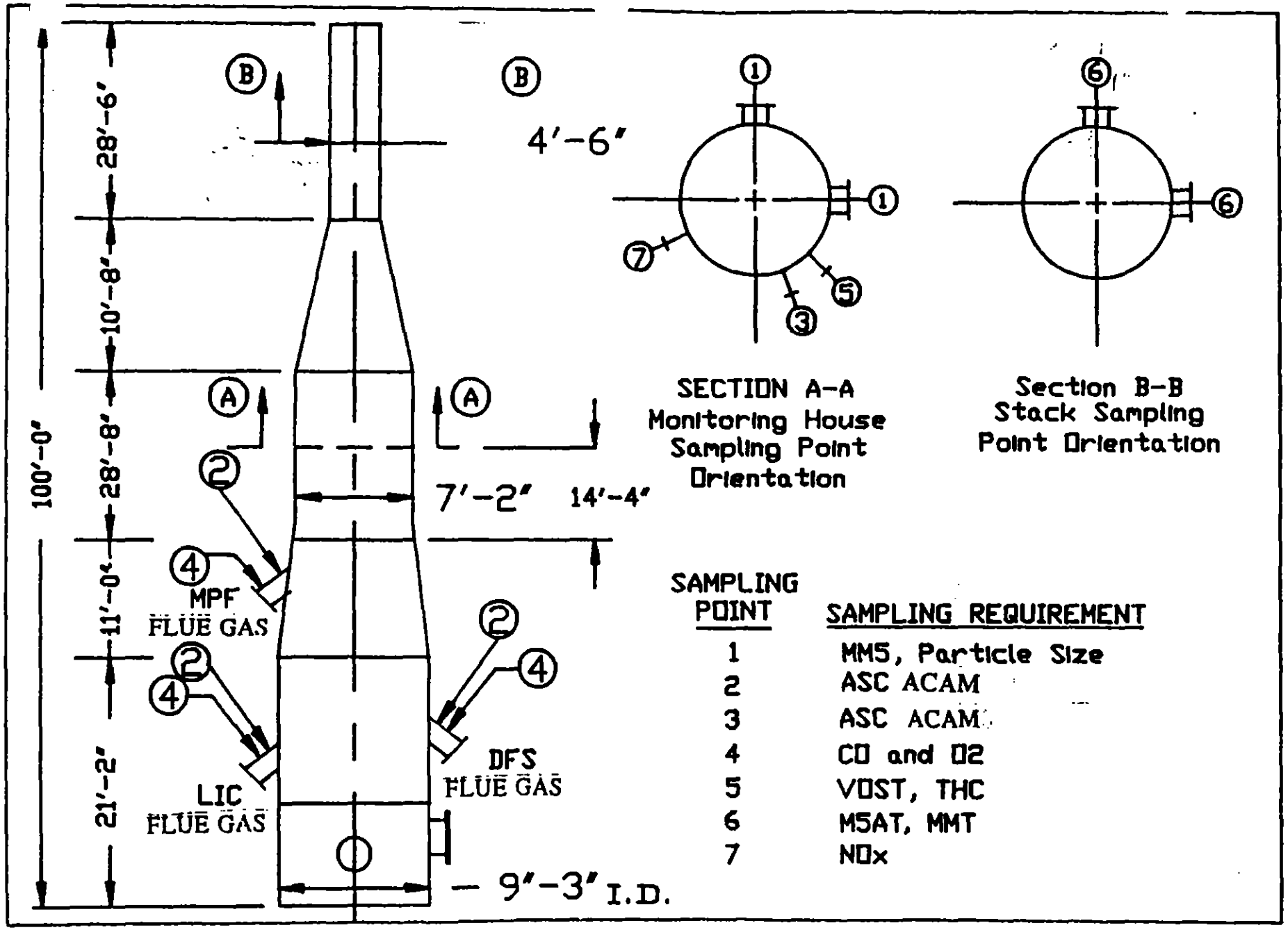

Figure 3-5. MPF, DFS, AND LIC STACK SAMPLE POINT LOCATIONS

8430 ± 160 cal/g. The agent-feed rate during this test was 700 lb/hr. A Decon Solution (DS) was fed during these tests at an average rate between 3.09 and 3.34 gal/min.

3.4 Sampling Locations

A summary of the sampling locations and sample types is given in Table 3-1. The sampling location for the MM5 was approximately 52 ft above the ground. The sampling ports were located 13 ft (1.81 stack diameters) downstream from a constriction in the stack and 19 ft 5 in. (2.71 stack diameters) upstream from a constriction in the stack. The stack-sampling location for the M5AT and MMT was 86 ft above ground. The ports at this location were 13 ft (2.90 stack diameters) downstream from a constriction in the stack and 14 ft 1/2 in. (3.13 stack diameters) upstream from the outlet of the stack. Because of the close proximity of flow disturbances to the sampling levels, the sampling traverses were made with the maximum number of points (24) called for by the EPA methods. The actual locations of the points that were used are detailed in Tables 3-2 and 3-3.

3.5 Facility Instrumentation

The JACADS LIC facility includes several continuous emission monitors (CEMs) and a process data acquisition and reporting (PDAR) system. Specifically, there are O_2 monitors at the exhaust of the primary chamber, at the exhaust of the secondary chamber, and at the stack. Moreover, CO monitors are located at the exhaust of the LIC fan outlet, and ACAMS units are located at the LIC fan outlet and at the stack to provide agent-concentration data and rapid warning of detectable agent in the flue gases. Table 3-4 provides a general summary of the CEM characteristics and specifications for the LIC.

Process data are logged by the PDAR system continuously throughout all operations of the JACADS facility. Data are taken at approximately 1-sec intervals and averaged over a time span of 4 min. For each averaging period, the minimum, maximum, and average value of each process variable is logged.

TABLE 3-2. LOCATION OF SAMPLING POINTS FOR METHOD 5 ACID TRAIN, MULTIPLE METALS TRAIN, AND PARTICLE SIZING

Point Number	Percent of Diameter from Wall	Distance from Wall, in.
1	2.1	1 1/8
2	6.7	3 5/8
3	11.8	6 3/8
4	17.7	9 9/16
5	25.0	13 1/2
6	35.6	19 3/16
7	64.4	34 11/16
8	75.0	40 3/8
9	82.3	44 5/16
10	88.2	47 1/2
11	93.3	50 1/4
12	97.9	52 3/4

The sampling ports are located 13 feet (2.90 stack diameters) downstream from a constriction in the stack and 14 feet 1/2 inch (3.13 stack diameters) upstream from the outlet of the stack. The locations of the sampling points were calculated as follows:

Port and Wall Thickness = 4 1/8 inches

Inside Stack Diameter = 53 7/8 inches

TABLE 3-3. LOCATION OF SAMPLING POINTS FOR MM-5 TRAIN

Point Number	Percent of Diameter from Wall	Distance from Wall, in.
1	2.1	1 13/16
2	6.7	5 3/4
3	11.8	10 3/16
4	17.7	15 1/4
5	25.0	21 9/16
6	35.6	30 11/16
7	64.4	55 7/16
8	75.0	64 9/16
9	82.3	70 7/8
10	88.2	75 15/16
11	93.3	80 3/8
12	97.9	84 5/16

The sampling ports are located 13 feet (1.81 stack diameters) downstream from a constriction in the stack and 19 feet 5 inches (2.71 stack diameters) upstream from a constriction in the stack. The locations of the sampling points were calculated as follows:

Port and Wall Thickness - 8 13/16 inches

Inside Stack Diameter - 86 1/8 inches

TABLE 3-4. FACILITIES EMISSIONS MONITORING INSTRUMENTAITON

Parameter	Model & Type of Instrument	Sampling Location	Type of Output	Design Range	Operating Range	Accuracy	Precision
Oxygen	Thermox Model LS Electrochemical analyzer	Exhaust Stack Primary Outlet Secondary Outlet	4 to 20 ma	0 to 25% Oxygen in Exhaust Gases	0 to 25% Oxygen in Exhaust Gases	0.1%	0.5%
Carbon Monoxide	Anarad Model AR-50R NDIR	Exhaust Stack Secondary Outlet	4 to 20 ma	0 to 500 ppm in Exhaust gases	0 to 500 ppm in Exhaust gases	±1% of full scale	±1% of full scale
VX	ACAMS Gas Chromatography	Exhaust Stack Blower Duct	0 to 10 volt	0.00001 to 1 mg/m^3	to ASC (0.0003 mg/m^3)	±25%	±25%
NOX	Teco	Exhaust Stack	0 to 10 volt	0 to 500 ppm	0 to 500 ppm	±1%	±1%

4. TEST PROCEDURES

4.1 Preparation for Testing

All equipment and instrumentation was calibrated as required and was rendered operational prior to the start of the test. The sample feed consisted of VX that had been collected from M55 rockets. The rockets had been previously destroyed in the DFS. The agent-feed rate during these tests was 700 lb/hr. The decontamination solution feed rate ranged from 3.09 to 3.34 gal/min. The interlock cutoff value is 700 lb/hr plus 10%.

The incinerator and PAS operating criteria were as follows;

Primary chamber exhaust temperature	2700 ± 150 °F
Secondary chamber exhaust temperature	2000 ± 150 °F
Carbon monoxide (corrected to 7% O_2)	≤100 ppm hourly avg.
Carbon monoxide (corrected to 7% O_2)	200 ppm peak
Scrubber liquid flow	≥395 gpm
Packed-bed delta P	1 - 10 in. H_2O
Venturi delta P	5 - 50 in. H_2O
Scrubber pH	≥7

4.2 Continuous Monitoring Methods

4.2.1 Continuous Emission Monitors

Continuous emission monitors are used at JACADS to determine O_2, NO_x, and CO. The monitors are checked for drift and span every 24 hr. The daily checks are included in Appendix E.

4.2.2 Chemical Agent Monitors

The ACAMS was used to monitor for VX in stack gases. The ACAMS is capable of providing near-real-time monitoring for trace quantities of military chemical agents. Essentially, the ACAMS is a gas chromatograph (GC) that has been equipped with a solid-sorbent sample-collection device and with the circuitry, hardware, and software to permit it to collect and analyze samples automatically. The ACAMS is equipped with a fused-silica GC column, a flame-photometric detector (FPD), a sampling pump, and a small tube packed with a solid-sorbent material. ACAMS units used for stack sampling are interfaced with stack-sampling devices that enable them to sample chemically hostile stack gases. Three ACAMS were used to monitor the stack. These are located at the blower (1 ACAMS) and the exhaust (2 ACAMS, one operated at a time with the other as a standby system). The ACAMS operates in cycles of fixed duration that contain predetermined periods for the collection and the analysis of samples. Functions such as the flow rates of operating gases and the column oven temperatures are also predetermined and controlled by appropriate software. However, the rate at which samples can be collected is manually controlled.

Because agent VX strongly adheres to almost all surfaces, it is routinely collected and determined as its G-Analog (ethyl methlyphosphono-fluoridate). The conversion of VX to its G-Analog is accomplished by passing the sample air (stack gas) through an AgF-impregnated polyester pad -- the V-to-G conversion filter -- that is affixed to the inlet of the sampling tube.

The ACAMS was calibrated and challenged by injecting known amounts of VX onto a V-to-G conversion filter mounted in the sampling system and allowing the instrument to complete its sampling/analysis cycle. Instrument responses are displayed on a Gas Plasma Display (GPD) screen on the front of the instrument, on a strip-chart recorder that is part of the ACAMS unit, and in the JACADS control room.

The ACAMS units are calibrated at a minimum of every 30 days. The instrument is calibrated to the ASC (0.0003 mg/m^3) and set to alarm at 0.7 ASC. An additional calibration challenge is performed every 4 hr during operation, and set-points are recalibrated if necessary. ACAMS calibration and challenge data for the LIC trial burn are included in Appendix E.

4.3 Manual Sample-Collection Methods

Sampling was performed according to the "Sampling and Analytical Protocol for the Resource Conservation and Recovery Act (RCRA) Trial Burns and the Toxic Substance Control Act (TSCA) Demonstration Test Burn at JACADS" (included as Appendix G). Standard methods were used to collect the samples. A brief description of the methodology that was employed and the samples that were generated is presented within this section.

4.3.1 Modified Method Five (MM5)

Method 0010 from SW846 was used to collect samples for determinations of semivolatile PICs and dioxins/furans. All train glassware was cleaned with a 1:1 solution of methanol/methylene chloride prior to use. The MM5 train was set up to collect 4 m^3 of stack gas over a 4-hr period. A minimum volume of 105 ft^3 is required by the cited method, but a volume of about 160 ft^3 was collected during the LIC trial burn to enhance sensitivity. During recovery of samples, all glassware prior to the solid sorbent was rinsed first with toluene, then with methanol/methylene chloride to generate two separate rinse samples. The filter, sorbent, and condensate were then collected, resulting in a total of five fractions for analysis.

4.3.2 Volatile Organic Sampling Train (VOST)

Method 0030 from SW846 was used to collect samples for volatile organic compound analysis. All of the sorbent tubes and the condensate samples were recovered from the VOST system for laboratory analysis. Several sorbent tubes were included as blank samples for each of the four runs. Each run provided four pairs of stack-sample sorbent tubes, each pair representing approximately 20 L of stack gas. The method employed the slow VOST which runs at 0.5 L/min. No samples were taken during the port changes.

4.3.3 Method Five Acid Train (M5AT)

Method 0050 of SW846 was used in the collection of samples for the determination of acid gases and particulates. A minimum sample volume of 30 ft^3 was required; actual sample volumes were approximately 65 to 80 ft^3. Recovery of the probe wash, filter, 2 acidic and 2 caustic impingers generated six samples for analysis.

4.3.4 Multiple Metals Train (MMT)

Collection of samples for the determination of metal analytes and particulates was carried out with a Method 5 train equipped with additional impingers containing appropriate scrubbing solutions. A minimum sample volume of 30 ft^3 was required; however, to enhance sensitivity, samples of approximately 50 to 60 ft^3 were collected during the LIC testing. The resulting nine train fractions were submitted to the laboratory for analysis.

4.3.5 Particle Size Distribution

Particle-size distribution measurements were made on the particulate matter in the stack gas with the use of University of Washington (Pilat) Mark V/III cascade impactors. The impactors were fitted with SoRI/EPA Right-Angle Precollectors and were operated insitu. The impactor was configured for these tests to provide data in seven size fractions, with stage cut sizes ranging from about 0.4 to about 12 μm. The sampling period for each sample was divided in half and split between two locations in one stack. Each of the two locations in the duct were selected to have velocities equal to the average duct velocity. Sampling was done with a fixed flow rate for each sample and with the sampling flow rate and nozzle size selected to provide isokinetic conditions, provided the stack gas flow did not change. The particulate material that was collected was determined gravimetrically. All weighing of the impactor stage and filter catches was done on-site using a Cahn electronic microbalance to a sensitivity of 10 μg.

4.3.6 Orsat

Manual Orsat (EPA Method 3) was used to quantify CO_2 and O_2 for molecular-weight determinations.

4.3.7 Support Methods

EPA Methods 1, 2, and 4 were used for determination of traverse points, velocity profiles, and moisture content as required in all isokinetic sampling efforts. Appendix F details the application of these methods.

4.3.8 Total Hydrocarbons

The average total hydrocarbon concentration was measured by EPA Method 25A.

4.4 Trial Burn and Sample Collection Sequence and Procedure

4.4.1 Trial Burn Sequence and Procedure

The trial burn was conducted in accordance with "JACADS Liquid Incinerator RCRA Chemical Agent VX and Spent Decon Trial Burn Plan (Appendix O).

The following items are reported as deviations from the above-referenced plan. The below listed items were either discussed at the pre-trial burn meetings or through the course of the trial burn at which time EPA Representative concurrence was obtained:

- Section 7.5 and Section 7.3.3 of the Test Plan were clarified by agreeing that the brine sample from the brine-storage tanks was not required. Rather, it was agreed that the PAS scrubber sump samples would be taken before and after each trial-burn run. Also, transfers of brine to the brine-storage tanks would be allowed as long as quantities and times of transfer were recorded. It was also agreed that the refractory salt sample could be collected after the burns were completed and during normal maintenance removal of the salts.

- The LIC operating limit in Tables 1 and 2A needed to be revised to allow VX agent-feed fluctuations up to 750 lb/hr. After this was done, the waste feed stop interlock did not have to be engaged until 750 lb/hr was exceeded.

- It was determined that LIC furnace-room ventilation air would be mixed with exhaust gases upstream of the quench system during the trial burn. This practice reflects normal operating procedures.

- An agreement was reached with EPA representatives that a "family" of decontaminant solutions could be used in the trial burns consisting of sodium hydroxide and sodium hypochlorite of varying densities. It was also agreed that DS would be measured in gallons per minute versus pounds per hour.

- In Appendix E of the Test Plan, Item 4c was revised to read "delay of 5 minutes" instead of "delay of 4 minutes".

- The following facility changes were added to Appendix E of the Test Plan:

  The removal of the prefilters from the LIC mist eliminator vessel.

  The LIC I.D. Fan motor was replaced from a 250 HP unit to a 300 HP unit.

  Dual flame Scanner and rewiring to provide more reliable flame strength readings to the LIC Primary.

  Replacement of the agent-feed control valve.

4.4.2 Ramp Up Procedure

The flow of spent decontaminant solution flow to the LIC secondary chamber was initiated at full rate. After the furnace operating conditions were allowed to stabilize, agent feeding to the primary chamber was initiated at a feed rate of 300 lb/hr. After a short period to allow furnace operating conditions to stabilize again, the feed rate was increased in increments of 50 lb/hr, with sufficient time for furnace operating conditions to stabilize between each increase. After a feed rate of 550 lb/hr was attained, the incremental increases were reduced to 25 lb/hr, and at 650 lb/hr, the incremental increases were further reduced to 10 lb/hr until an agent-feed rate of 700 lb/hr was achieved. After furnace operating conditions had stabilized, the RCRA trial-burn sampling run was commenced with an agent-feed rate of 700 lb/hr to the primary chamber and with DS feeding to the secondary

chamber at full rate. DS was fed to the incinerator at a nominal rate of 3.4 gal/min during these burns.

4.4.3 Sample Collection Sequence

The sequence of events in carrying out the sampling was as follows:

Personnel from SRI arrived on Johnston Atoll at 0920 on Wednesday, February 26, 1992. Personnel attended an orientation. All work was completed at 1700.

On Thursday, February 27, orientation began at 0600 and was completed at 1315. Personnel attended a scheduling meeting from 1400 until 1500. Personnel arrived at the plant at 1530. Entry was delayed until 1630 due to a lack of escorts. The sampling equipment was unpacked and moved onto the stack house. All work was completed at 1730.

On Friday, February 28, work began at 0700. The testing equipment was moved onto the stack. All work was completed at 1500.

On Saturday, February 29, work began at 0700. The equipment was checked out and prepared for testing. All work was completed at 1500.

On Tuesday, March 10, work began at 0600. The equipment was prepared for testing on the LIC Stack. Testing was delayed due to unit operational problems. For the first test run, sampling began at 1547 on March 10 and proceeded without interruption other than for port changes at 1747 until 2006, when the test was completed. At 1930 6000 gallons of brine (density, 1.072) was sent to the ISO container. Pretest process samples for the first test run were collected between 1010 and 1615 hours, and post-test samples were collected between 2010 and 2035 hours. The samples were recovered, and the equipment was secured for the night. All work was completed at 2130.

On Wednesday, March 11, work began at 0600. Sampling for the second test run began at 0758 and proceeded until 1009, when a shutoff took place in the decontaminant supply system. A port change took place at 0958. This problem was solved quickly and sampling resumed at 1014. However, a low-temperature alarm from TIC 126, a secondary refractory-temperature thermocouple that had failed, caused a second shutoff of the decontaminant flow, which was immediately followed by a high-furnace-pressure alarm that shut off the agent feed. Thus, sampling was suspended for a second time at 1019. Agent feeding was resumed at 1047 and sampling restarted once more at 1156, from which point the test proceeded to completion at 1412 without further upsets. Between 0920 and 1442 1500 gallons of brine (density 1.087) were sent to the BRA. The equipment was secured for the night. Pretest process samples were collected between 0730 and 0800; post-test samples were collected between 1355 and 1430. The samples were recovered and packed for shipment. All work was completed at 1700.

On March 12 and 13, 1992, testing was performed on the DFS incinerator.

On Sunday, March 15, work began at 0600. Agent feeding for the third test run began at 0728, and sampling commenced at 0823. A port change occurred at 1023. Sampling was completed at 1247, with no incidents having taken place. Between 0834 and 1358 brine (density 1.005) was transferred to BRA. Pretest process samples were collected between 0815 and 0843. Post-test

samples were collected between 1245 and 1335. The samples were recovered and the equipment was secured for the night. All work was completed at 1400.

On Monday, March 16, work began at 0600. Agent feeding for the fourth test run began at 1925 on that day, and sampling commenced at 2038. A plugged probe to a flue-gas O_2 analyzer caused an agent-feed shutoff to occur at 2158. The problem was solved and agent feeding resumed at 2247. Sampling was resumed at 2328, and the test was completed at 0213 on March 17, with no further incidents having taken place. A port change occurred at 0005. Brine (density 1.067) was transferred to the BRA at 0015. Pretest process samples were collected between 1945 and 2020. Post-test samples were collected between 0200 and 0225. The samples were recovered and the equipment secured for the night. All work was completed at 0330 on Tuesday, March 17.

On Tuesday, March 17, work began again at 1200. The equipment was moved off of the stack and loaded into the shipping containers. The samples were packed and prepared for shipment to SRI.

4.4.4 Sample Collection Procedure

Samples of 5-min duration for the particulate matter and for HCl were taken isokinetically at each traverse point with an EPA-type heated, glass-lined probe (M5AT). Moreover, samples of 3-min duration for the particulate matter and for heavy metals were also taken isokinetically at each traverse point with an EPA-type heated, glass-lined probe (MMT). Finally, semivolatile samples of 10-min duration were taken isokinetically at each traverse point with an EPA-type heated, glass-lined probe (MM5).

Each sampling train was leak-checked at the nozzle (at 15 in. of mercury vacuum) before each test, during port change, during component change, and again leak-checked at the nozzle after each test at the highest vacuum reading recorded during the test. A leak criterion of "not greater than 0.1 in. of mercury in 2 min" was used. Pretest leaks were corrected prior to the start of sampling. The lines were also checked for clearance, and the console manometer was zeroed before each test. The pitot-tube lines were checked for leaks before and after each test run. The method was modified to preclude the collection of moisture in the pitots. After each pressure reading, a three-way valve was utilized to clean moisture from the pitot tubes.

In summary, most stack sampling was conducted simultaneously. The M5AT sampling process concluded somewhat before the midpoint of the overall test period, and the M5MMT sampling process started at the beginning of the third hour of sampling.

The samples that were collected for analysis included those needed for determining:

a. Particulate concentration in the stack gas: two samples per test (M5AT and MMT).

b. HCl and HF concentration in the stack gas: one sample per test (M5AT).

c. Selected metals in stack emissions in the stack gas: one sample per test (MMT).

d. Volatile and semivolatile organic emissions in the stack gas. (MM5 and VOST)

e. CO_2 in the stack gas (Orsat).

f. NO_x in the stack gas.

g. CO and O_2 at the afterburner.

h. Total hydrocarbons in the stack gas.

In addition, the following media were sampled:

a. PAS brine sampled at beginning and end of test from LIC Valve 896.

b. Caustic makeup sampled at beginning and end of each test from LIC Valve 312.

c. Process feed water sampled at the beginning and end of each test from LIC Valve 346.

d. Fuel oil from the Valve 332 (Oil pump exhaust tap).

e. Scrubber liquor sampled at the beginning and end of test from LIC Valve 901.

Table 4-1 summarizes the sampling and analysis procedures. The sampling procedures are also summarized in Appendix D.

4.5 Sampling Contingency Plan

The following contingency plans were adopted and used in these tests:

Upset conditions in the incinerator, such as the loss of a key monitor, an agent alarm, or any non-steady-state incinerator condition, will result in a feed stoppage. Sampling operations will be affected by the upset condition as defined below:

Upset of 30 or less minutes	Stop trains in stack
Upset greater than 30 minutes	Remove and cap trains
Upset greater than 2 hours	Stop test
Cumulative feed stop of 2 hours	Stop test unless otherwise directed by EPA

Leak checks must be performed when trains are removed from the stack; if leaks are found, the test must be terminated.

4.6 Analysis

The procedures that were used for preparing and analyzing samples are described briefly in this section. The test plan in Appendix G also describes the analytical methods. The methods were based on standard EPA procedures, which are referenced below according to method number. Any deviations from the standard methods are documented with supporting QA/QC results.

TABLE 4-1. SUMMARY OF SAMPLING AND ANALYSIS ACTIVITY[a]

Sampling method	Sample description	Sampling period (minutes)	Sampling location	Analytical parameters	Analytical method
EPA VOST	Volatile Organic Sample Train Slow VOST	160	Stack House	Volatile PICs	EPA 8240/5040
EPA M5AT	Method 5 Acid	120	Stack Platform	Particulates HCl, HF	EPA 5 EPA 300 Ion Selective Electrode
EPA MM5	Modified Method Five	240	Stack House	Semi-volatile PICs PCDD/F	EPA 8270 EPA 8290
M5 Metals	Method 5 Metals	72	Stack Platform	Particulates, Selected Metals	EPA 5 EPA 6010/7420
EPA REF Method 3	Orsat	240	Stack House	CO_2, O_2	EPA 3, 3A
GRAB	Brine		LIC valve 896	EP Toxicity Metals pH Anions PCDD/F Volatile PICs Semivolatile PICs Agent	EPA 6010/7470 EPA 9040 EPA 300 EPA 8290 EPA 8240 EPA 8270 GC

(continued)

TABLE 4-1 (continued)

Sampling method	Sample description	Sampling period (minutes)	Sampling location	Analytical parameters	Analytical method
GRAB	Scrubber Liquor		LIC valve 901	EP Toxicity Metals	EPA 6010/7470
				pH	EPA 9040
				Anions	EPA 300
				PCDD/F	EPA 8290
				Volatile PICs	EPA 8240
				Semivolatile PICs	EPA 8270
				Agent	GC
GRAB	Process Water		LIC valve 346	EP Toxicity Metals	EPA 6010/7470
				pH	EPA 9040
				Anions	EPA 300
				PCDD/F	EPA 8290
				Volatile PICs	EPA 8240
				Semivolatile PICs	EPA 8270
				Agent	GC
GRAB	Caustic		LIC valve 312	EP Toxicity Metals	EPA 6010/7470
				pH	EPA 9040
				Anions	EPA 300
				PCDD/F	EPA 8290
				Volatile PICs	EPA 8240
				Semivolatile PICs	EPA 8270
				Agent	GC
ACAMS	Stack Gas	Continuous	Stackhouse LIC Duct	VX	Desorption/GC

(continued)

TABLE 4-1 (continued)

Sampling method	Sample description	Sampling period (minutes)	Sampling location	Analytical parameters	Analytical method
NO_x	Stack gas	Continuous	Stack		
O_2, CO	Stack gas	Continuous	Blower Duct, Afterburner		
THC	Stack gas	Continuous	Stack		

[a]Appendix J contains the test plan and has more detailed descriptions of sampling and analysis methods.

4.6.1 Semivolatile Organics Analysis

4.6.1.1 Extractions

The XAD-2 sorbent cartridges for the MM5 were prepared according to SW846 Method 0010. The sorbent cartridges were spiked with 92.5 μg of 1,2-dichlorophenol-d_3, 205 μg of 1,2,4-trichlorobenzene-d_3, 1 μg of decachlorobiphenyl-$^{13}C_{12}$ and 2 ng of 2,3,7,8-tetrachlorodibenzo-p-dioxin-$^{37}Cl_4$ prior to shipment to the field.

MM5 samples were extracted from the sorbent cartridges according to SW846 Method 3540. The XAD-2 sorbent cartridges and filters were spiked with PCDD/F isotope-dilution standards, which consisted of the following fourteen $^{13}C_{12}$-labeled compounds: 2,3,7,8-TCDF, 1,2,3,7,8-PeCDF, 2,3,4,7,8-PeCDF, 1,2,3,4,7,8-HxCDF, 1,2,3,6,7,8-HxCDF, 1,2,3,7,8,9-HxCDF, 1,2,3,4,6,7,8-HpCDF, 1,2,3,4,7,8,9-HpCDF, 2,3,7,8-TCDD, 1,2,3,7,8-PeCDD, 1,2,3,4,7,8-HxCDD, 1,2,3,6,7,8-HxCDD, 1,2,3,4,6,7,8-HpCDD, and OCDD. In addition, the base-neutral-acid surrogates, which consisted of phenol-d_6, 2-fluorophenol, nitrobenzene-d_5, 2-fluorobiphenyl, 2,4,6-tribromophenol, and terphenyl-d_{14}, were also added. The substances of interest that were collected in all sorbent and filter samples were Soxhlet-extracted, and liquid-impinger samples were subjected to liquid-liquid extraction by SW846 Method 3510. The filter and front was from each train were combined and the resin and back half of each train were combined to make two separate samples from each MM5 train. Each of the resulting samples was concentrated to 10 mL, of which 1 mL was allotted for the determination of semivolatile organics and 9 mL for determination of PCDD/F.

Aqueous samples (PAS brine, caustic makeup, feed water) were treated for extraction by the liquid-liquid extraction method given in SW846 Method 3520. That is, about 500 mL of each sample was placed in a continuous liquid-liquid extractor, pH-adjusted to greater than 11 (if necessary), and spiked with the chlorinated organic surrogates and with the PCDD/F isotope-dilution standards. The sample was then treated by extraction with methylene chloride for 18 to 24 hr. The methylene chloride was removed, the pH of the sample adjusted to less than 2, and the sample again subjected to extraction for an additional 18 to 24 hr with another 500 mL of methylene chloride. Each of the resulting samples was concentrated to 10 mL and split to allow the analysis of semivolatile organics on 1 mL of the sample and PCDD/Fs on 9 mL of sample.

Samples for PCDD/F analysis were cleaned up according to Method 8290. No further cleanup was performed on the portion of the sample reserved for the determination of semivolatile organics. The PCDD/F extract was partitioned against 20% aqueous KOH, 5% aqueous NaCl, several portions of concentrated H_2SO_4, and 5% aqueous NaCl (in that order). The extract was spiked with the clean-up standard ($^{37}Cl_4$-2,3,7,8-TCDD), unless the extract was from XAD-2 cartridge which had been spiked with this compound before being shipped to the field. The sample was evaporated to 2 mL and eluted through an alumina column (Woelm Super 1). The fraction obtained from the 8% methylene chloride/hexane eluent was found to contain the components of interest, and this fraction was used for further cleanup and analysis. All samples were also cleaned up with an AX-21 carbon column. The toluene fraction was reduced to 1 mL and spiked with isotopically labeled internal standard $^{13}C_{12}$ compounds: 1,2,3,4-TCDD and 1,2,3,7,8,9-HxCDD. The toluene fraction was reduced to 20 μL and the solvent

exchanged with nonane before the sample was subjected to analysis by HRGC/HRMS.

The fuel-oil samples for PCDD/F analyses were prepared by weighing 2 g of each sample into a 10-mL volumetric flask, adding the PCDD/F isotope-dilution standards, diluting the sample to 25 mL with hexane and cleaning the sample by the above method. The fuel-oil samples for semivolatile organic analysis were prepared by diluting 10 μL fuel oil to 10 mL with methylene chloride.

4.6.1.2 Analytical Procedures for Determining Semivolatile Organics

4.6.1.2.1 Polychlorinated Dibenzo(p)dioxins and Polychlorinated Dibenzofurans

Samples designated for PCDD/F analyses were analyzed by HRGC/HRMS according to EPA Method 8290.

Fourteen (instead of nine) isotopically labeled internal standards (isotopically labeled analogues of the seventeen target compounds except for 2,3,4,6,7,8-HXCDF; 1,2,3,7,8,9-HXCDD; an octachlorofuran), two isotopically labeled recovery standards (13C12-1,2,3,4-TCDD and 13C12-1,2,3,7,8,9-HXCDD), and one isotopically labeled cleanup standard (37CL4-2,3,7,8-tetrachlorodibenzo[1,4]dioxin) were used. The cleanup standard was spiked into XAD-2 resin used in the field (field spike) or into the concentrated extract prior to cleanup (cleanup standard) for all other samples. Five-level calibration curves were generated with the use of the 17 target PCDFs and PCDDs specified by Method 8290. The lowest concentrations corresponded to 0.02 ng of TCDD or TCDF; 0.10 ng of PECDD, PECDF, HXCDD, HXCDF, HPCDD, or HPCDD; and 0.20 ng of OCDD and OCDF in 20 μL of solution.

The samples were also analyzed for total TCDFs, total TCDDs, total PeCDFs, total PeCDDs, total HxCDFs, total HxCDDs, total HpCDFs, and total HpCDDs. SW846 Method No. 8290 was used except that 14 (instead of 9) isotopically labeled internal standards, 2 isotopically labeled recovery standards, and 1 isotopically labeled cleanup standard were used.

Five-point calibration curves were generated for the components. The calibration curves for 2,3,7,8-TCDF and 2,3,7,8-TCDD covered the range from 0.02 to 4 ng; the curves for the 2,3,7,8-PeCDFs, 2,3,7,8-PeCDDs, 2,3,7,8-HxCDFs, 2,3,7,8-HxCDDs, 2,3,7,8-HpCDFs, and 2,3,7,8-HpCDDs extended from 0.10 to 20 ng; and the curves for OCDF and OCDD extended from 0.2 to 40 ng in 20 μL of solution.

The GC/MS analysis conditions are given below:

Instrument:	VG 70S GC/MS equipped with HP 5890 GC
Column:	J&W DB-5, 60 m x 0.32-mm ID, 0.25-μm film
Column Temp:	100 °C hold 2 min, then ramp to 180 °C at 20 °C/min, hold 1 min, then ramp to 220 °C at 5 °C/min, hold 14 min, then ramp to 300 °C at 5 °C/min, hold 7 min
Carrier Flow:	He at 1.5 mL/min

Injector Temp:	275 °C
Interface Temp:	215 °C
Injection Volume:	2 μL
Data System:	VG 11/250J

4.6.1.2.2 Base-Neutral-Acid Analysis

The MM5 samples, as well as the process-liquid and fuel-oil samples, were analyzed for base-neutral-acid compounds by Method 8270. Compounds that were analyzed included the target list from the test plan as well as nontarget compounds that were present at high levels. The spectra are retained in the files. The fuel-oil samples were diluted before analysis because of the high levels of semivolatile compounds that occurred naturally in the fuel oil and that interfered with the analysis. Internal standards were added immediately before analysis by GC/MS. The GC/MS conditions are given below:

Instrument:	HP 5971 GC/MS equipped with HP 5890 GC
Column:	HP-5, 60 m x 0.32-mm ID, 0.25-μm film
Column Temp:	45 °C hold 3 min, then ramp to 300 °C at 8 °C/min, then hold
Carrier flow:	He at 1 mL/min
Injector Temp:	270 °C
Interface Temp:	280 °C
Injection Volume:	1 μL
Data System:	HP DOS

4.6.2 Volatile Organics Analysis

Stack gases were analyzed for VOAs by SW846 Methods 5040 and 8260 with the 8240 compound list. Thus, the analyses were based on VOST sampling and GC/MS analysis. DFS incinerator residues were analyzed for VOAs by SW846 Method 8260 with the 8240 list. Compounds that were analyzed included the target list from the test plan as well as nontarget compounds that were present at high levels. The spectra are retained in the files. All analyses were by GC/MS.

4.6.2.1 VOST Analysis

VOST tubes were analyzed for volatile organics by SW846 Method 5040 with VOST sampling, and VOST condensates and aqueous process samples were analyzed by SW846 Method 8260 with the 8240 compound list. The analysis conditions are given below.

VOST tubes were purchased from Research Triangle Laboratory. The packed tubes were conditioned at approximately 180 °C for a minimum of 16 hours with prepurified nitrogen flowing through them. Two sets of tubes from each batch were then analyzed to confirm that no interfering compounds were present. The tubes were sealed and stored at 4 °C or below until use.

Internal standards and surrogates were added to all samples immediately prior to analysis by GC/MS. The volatile internal standards were bromochloromethane, 1,4-difluorobenzene, and chlorobenzene-d_5; each was added in the amount of 0.25 μg to VOST tubes, condensates, and aqueous process samples. Volatile surrogates were toluene-d_8, 1,2-dichloroethane-d_4, and 4-

bromofluorobenzene (BFB); each was added in the amount of 0.25 μg to all samples. Although BFB was added to VOST samples, the high boiling point of this compound makes it a poor choice as a surrogate for VOST analysis.

GC/MS conditions:

Purge and Trap:	Tekmar LSC-2, Trap OV-1/Tenax/Silica Gel/Charcoal
Purge:	11 min
Desorb Temperature:	200 °C
Desorb Time:	4 min
GC:	HP 5890 Series II
Column:	30 m x 0.53 mm ID, 3.0 μm, DB624
Program:	46 °C hold 5 min, then ramp to 140 °C at 6 °C/min
MS:	HP 5971 MSD
Scan:	35 to 260 amu at 4 sec/scan
Source Temperature:	200 °C
Interface:	Jet separator, 250 °C

4.6.3 Anions Analysis

The M5AT samples were analyzed for chloride and fluoride, whereas the process samples were analyzed for chloride, fluoride, and phosphate.

The ion-chromatography conditions are listed below:

Instrument:	Dionex DX-100 with conductivity detection
Column:	Ion Pac AS-4A
Eluent:	0.75 mM sodium bicarbonate/2.0 mM sodium carbonate
Flow Rate:	2.0 mL/min
Injection Volume:	100 μL

4.6.4 Metals Analysis

The MMT and TCLP metals other than mercury were determined by inductively coupled plasma atomic-emission spectrometry (ICP) according to SW846 Method No. 6010. These analyses were performed on a Perkin-Elmer Plasma 40 Emission Spectrometer. Samples were prepared for analysis as set forth in SW846 Method No. 3010, which involves acid digestion. The ICP wavelengths that were used are listed below.

Metal	Wavelength, nm
Arsenic	193.696
Selenium	196.026
Chromium	205.552
Antimony	206.833
Zinc	213.856
Cadmium	214.438
Phosphorus	214.914
Lead	220.353
Nickel	231.604
Barium	233.527

Boron	249.773
Manganese	257.610
Vanadium	292.402
Beryllium	313.042
Silver	328.068
Thallium	276.8
Tin	189.980
Cobalt	230.786
Copper	324.754

Mercury was determined in TCLP and MMT samples by cold-vapor atomic-absorption spectrometry at 253.7 nm (SW-846 Method No. 7470) with an Instrumentation Laboratory Model IL551 AA/AE Spectrometer equipped with a Model 440 Atomic Vapor assembly.

4.6.5 pH Measurements

The pH levels of the liquid-process samples were measured prior to the analyses of these samples for other parameters. The pH values were determined by combination glass electrode (with internal reference electrode) according to SW-846 Method 9040.

4.6.6 Particulates

Particulates were quantified in the acetone-probe rinse and in the filters from the MMT and the acid train. These samples were dried to a constant weight in a desiccator and weighed with an analytical balance to ±0.1 mg.

5. TEST RESULTS

5.1 Introduction

The test results for the LIC trial burn describe the LIC process characteristics, the furnace-operating parameters, the nature of the LIC stack emissions, and the chemical content of the incinerator residues. These results allow the calculation of such RCRA-required parameters as the DRE for the POHC; the VX concentrations in the stack, the combustion efficiencies, the particulate emissions, the HCl emissions, the steady-state furnace-operating temperatures, the CO concentrations in the stack, and the concentrations of certain metals in the process residues. Additionally, data are available from the monitoring of stack emissions for O_2, CO_2, PICs, PCDD/F, and metals, as well as from the analysis of incinerator-process samples (process water, scrubber liquor, scrubber brine, and caustic) for PICs, PCDD/F, F^-, PO_4^{-3}, and pH.

5.2 Process Data

5.2.1 Process Data Acquisition and Recording

Process conditions for the four test runs are summarized in Tables 5-1 and 5-2. The data represent averages over the time spans of the runs and were compiled from PDAR system records and manual stack-sampling logs. The available data indicate that the required temperature conditions, as specified in the RCRA permit application, were maintained throughout the runs. The CO concentration data in the PDAR log were not the raw measurements but were, instead, the values that were obtained after correction of the measurements to an O_2 concentration of 7%. Also listed in Table 5-1 are THC results which, when expressed as propane, indicated that 2 ppm or less was found for each test run. Figures 5-1, 5-2, 5-3, and 5-4 provide graphic illustrations of the fuel flow rates, O_2 concentrations, flue-gas temperatures, and sampling periods during the test to show that sampling occurred during times when the LIC was at a steady state.

5.2.2 Orsat

Orsat data are presented in Table 5-3, from which CO_2 concentration values were obtained and used, together with the PDAR concentration data for CO (after adjustment to the stack O_2 concentration), to calculate combustion efficiency. Combustion efficiencies calculated from hourly average CO and CO_2 concentrations are given in Table 5-4. The CO and CO_2 data show that the required combustion efficiency was obtained throughout the runs.

5.2.3 Chemical Agent

VX was not detected in the stack gas. The detection limits at the stack ACAMS station at all times during the four test runs were, respectively, 0.000042, 0.000042, 0.0000495, and 0.0000525 mg/m^3. In addition, all process samples were certified to contain less than the drinking water standard of 20 ppb of VX.

TABLE 5-1. LIC PDAR DATA

	Test Run 1			Test Run 2			Test Run 3			Test Run 4		
	Min.	Max.	Average	Min.	Max.	Average	Min.	Max.	Average	Min.	Max.	Average
Agent flow, lb/hr	679	714	696	682	716	700	678	721	699	685	716	699
Pri. comb, air flow, kscfh	137	139	138	136	139	137.6	137	138	137.3	136	138	137.5
Pri. comb, fuel flow, gph	10.7	11.1	10.9	10.7	12.7	11.9	12.1	12.4	12.2	12.1	12.4	12.3
Pri. exhaust temp., °F	2667	2680	2676	2669	2709	2705	2714	2725	2721	2616	2738	2730
Pri. exhaust O_2, %	4.9	10.8	5.3	5.4	11.4	6.34	6.3	11.8	6.8	6.7	15.7	6.9
Sec. comb, air flow, kscfh	22.3	22.9	22.5	22.4	27.5	23.5	24.4	58.9	43.7	29.9	57.9	47.4
Sec. comb, fuel flow, gph	11.9	12.2	12.0	11.9	14.7	12.6	15.2	39.2	24.8	15.9	40.5	29.8
Decon flow, gpm	2.29	3.11	3.03	0.41	3.44	3.31	3.25	3.36	3.34	2.04	3.37	3.19
Sec. exhaust O_2, %	5.7	8.0	6.2	5.9	8.2	6.6	6.4	16.9	7.2	5.5	16.7	6.6
Sec. exhaust CO, ppm (corrected to 7% O_2)	22	89	29.8	4	101	39.8	0	115	16.8	12	91	19.0
Sec. exhaust temp., °F	1974	2008	1985	1974	2082	1982	1994	2156	2064	1871	2023	1986
Furnace room temp., °F	124	125	124	122	124	124	124	125	124	124	127	125
Quench inlet temp., °F	1121	1137	1128	1145	1205	1158	1189	1368	1273	1163	1438	1296
Quench spray rate, gpm	64	69	66.5	65	69	66.9	62	70	66.1	65	70	67.7
Quench exit temp., °F	169	174	171	167	175	172	171	186	178	168	186	181
Brine pH	7.8	12.7	9.58	9.3	10.7	9.97	7.9	10.8	9.45	8.4	10.0	9.14
Venturi brine flow, gpm	168	171	170	167	173	170	167	172	170	159	176	170
Venturi dp, in. w.c.	26.6	29.5	28.0	19.8	31.4	30.0	23.9	28.2	26.0	17.3	26.3	24.9
Brine density, lb/cf	62.5	62.6	62.5	62.2	62.5	62.4	61.7	62.3	62.0	62.0	62.6	62.4
Liquor pH	8.5	10.6	9.01	8.5	10.5	9.00	8.4	9.8	8.79	8.3	9.1	8.89
Scrubber dp, in. w.c.	5.3	7.1	5.9	3.4	6.9	6.2	5.5	7.8	6.7	2.7	8.3	6.9
Scrubber liq. flow, gpm	587	609	599	588	611	599	589	609	599	592	608	599
Entrainment sep. dp, in. w.c.	0.2	0.2	0.2	0.2	0.2	0.2	0.2	0.3	0.22	0.1	0.3	0.23
Liquor density, lb/cf	64.8	64.9	64.9	64.8	65.0	64.9	66.0	66.2	66.1	67.0	67.1	67.1
Mist eliminator dp, in. w.c.	8.8	9.5	9.2	4.5	9.1	8.8	8.9	9.8	9.3	3.1	9.7	9.1
Fan amps	25	28	26.3	23	28	26.1	26	28	26.7	22	28	26.7
Stack CO, ppm	26	41	31.6	25	34	29.6	25	37	28.2	25	37	28
Stack NO_x, ppm	253	499	476	237	>500	458	252	494	477	64	>500	485
Stack O_2, %	14.9	15.2	15.1	14.7	16.4	14.9	13.2	15.0	14.2	12.7	17.3	13.7
Total Hydrocarbons[a], ppm (as Propane)	0	6	1.5	0	4	1.2	0	4.5	<0.5	0	11	<0.84
Agent Concentration, VX	ND[b]	ND	ND	ND	ND	ND	ND	ND	ND	ND	ND	ND

[a]Total hydrocarbons were not recorded by the PDAR but were logged separately. They are included here for completeness.
[b]ND indicates less than LOQ.

TABLE 5-2. PROCESS DATA FROM MANUAL STACK SAMPLING[a]

	Test Run			
	1	2	3	4
Gas flow, acfm	13881	13710	13922	13990
Gas flow, dscfm	7655	7478	7276	7177
Gas temperature, °F	188	188	191	190
Percent moisture	32.4	33.2	35.6	37.0
Percent O_2 (dry)	13.9	13.0	13.2	13.1
Percent CO_2 (dry)	5.6	6.1	5.7	6.1
Total gas flow, lb/hr	45035	44405	44395	44422
Dry gas flow, lb/hr	34758	33996	33114	32660

[a]Averages of M5AT, and M5MMT results.

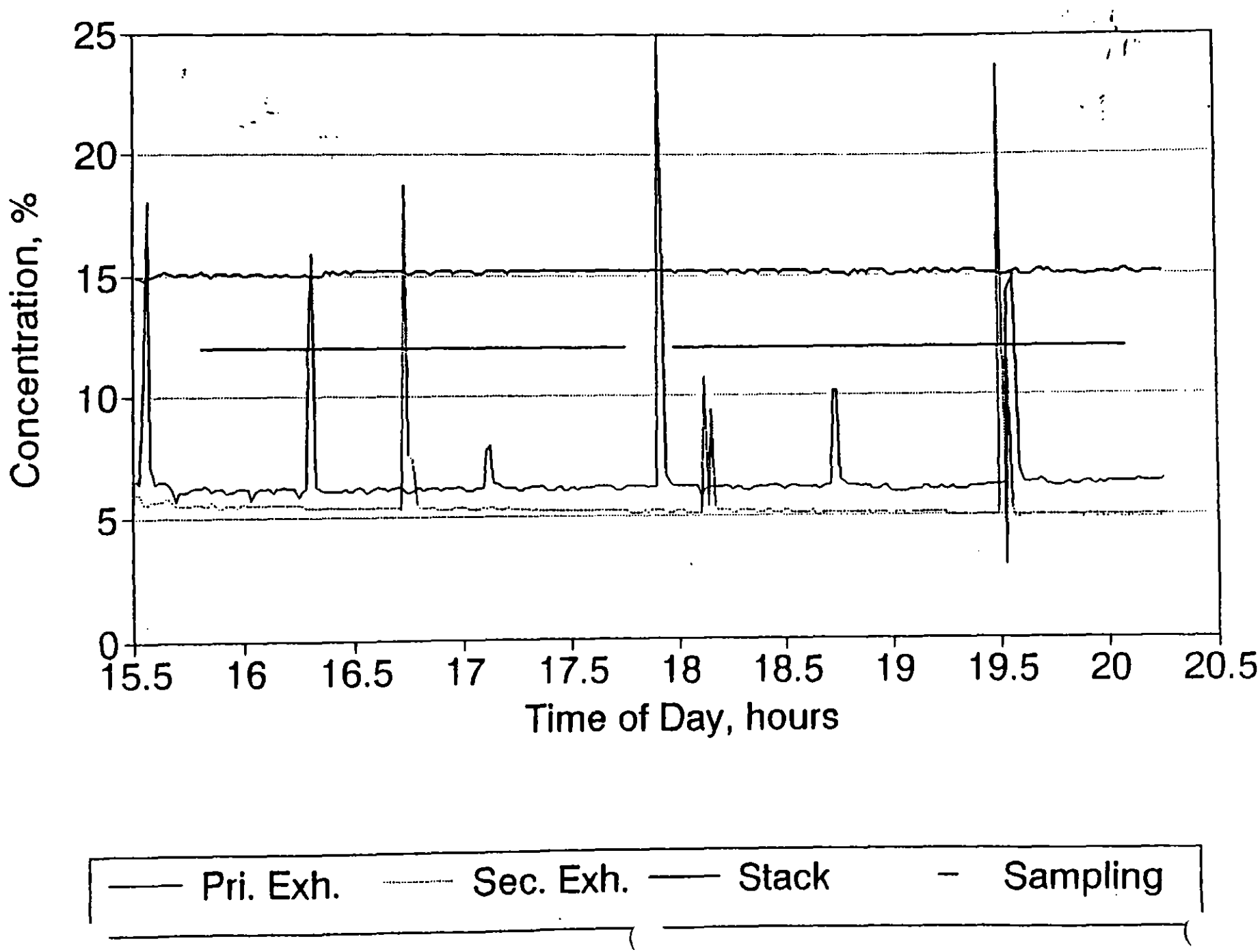
25
20
15
10
5
0
Concentration, %
15.5
16
16.5
17
17.5
18
18.5
19
19.5
20
20.5
Time of Day, hours
Pri. Exh.
Sec. Exh.
Stack
Sampling

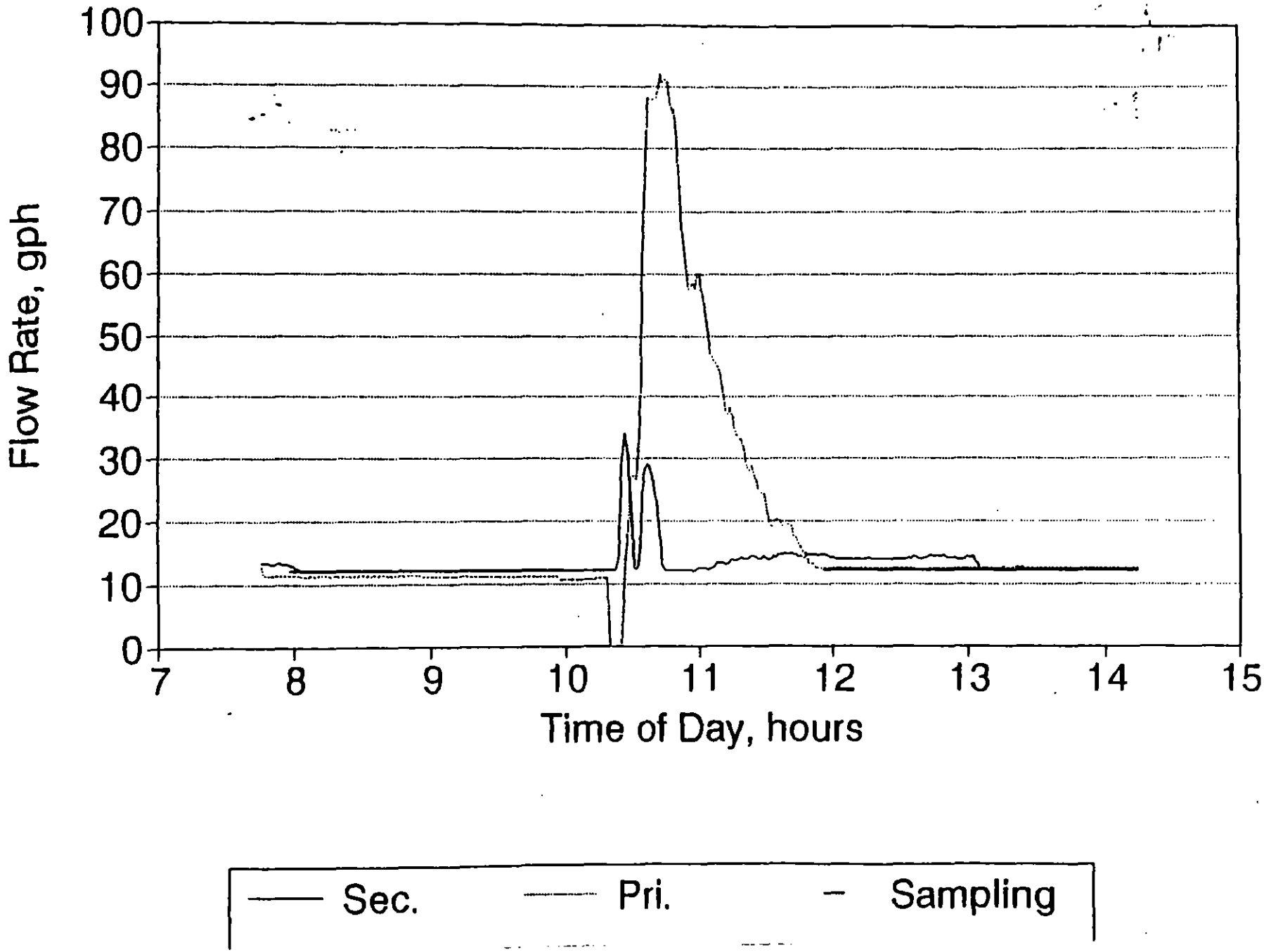
100
90
80
70
60
50
40
30
20
10
0
Flow Rate, gph
7
8
9
10
11
12
13
14
15
Time of Day, hours
Sec.
Pri.
Sampling

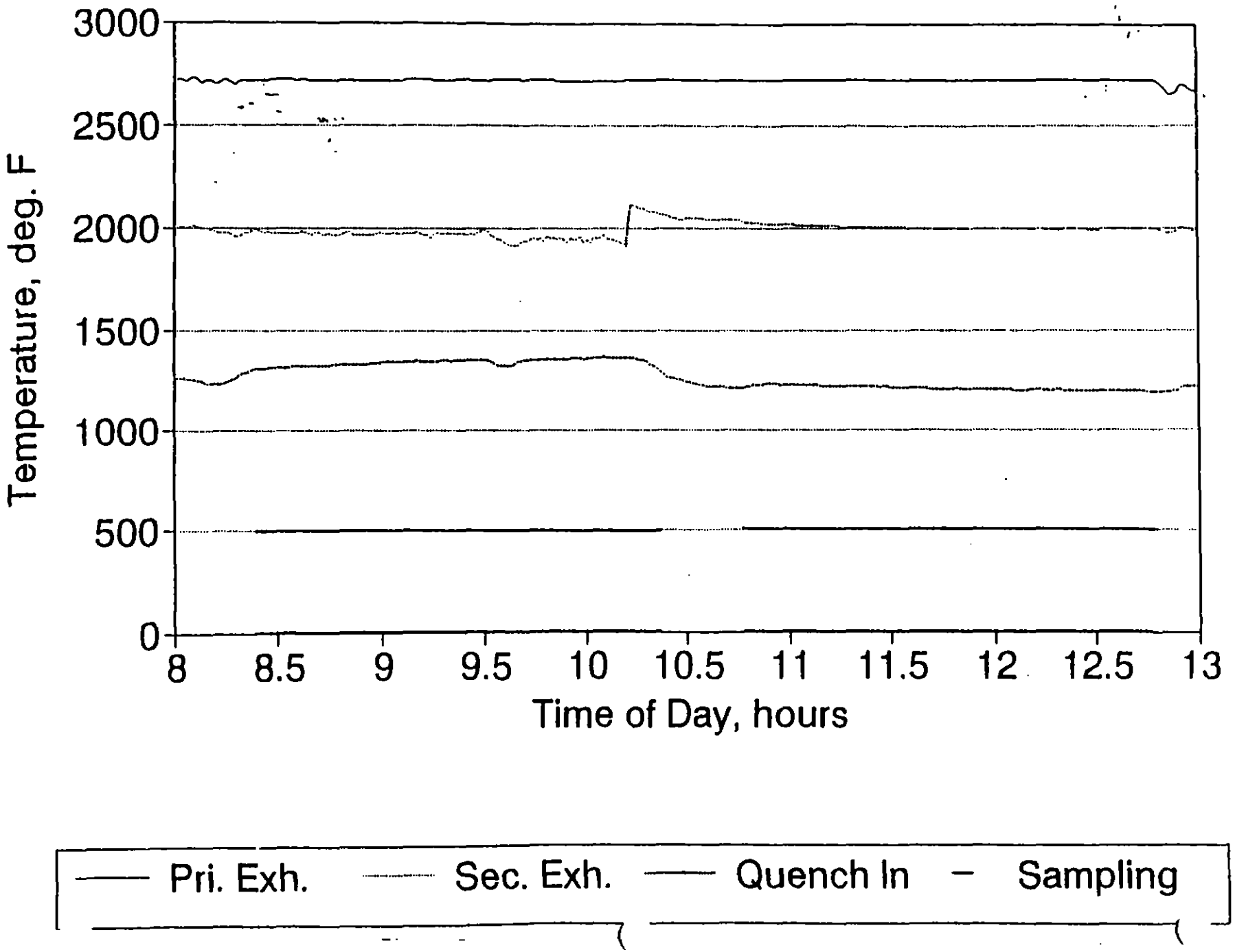
3000
2500
2000
1500
1000
500
0
Temperature, deg. F
8
8.5
9
9.5
10
10.5
11
11.5
12
12.5
13
Time of Day, hours
Pri. Exh.
Sec. Exh.
Quench In
Sampling

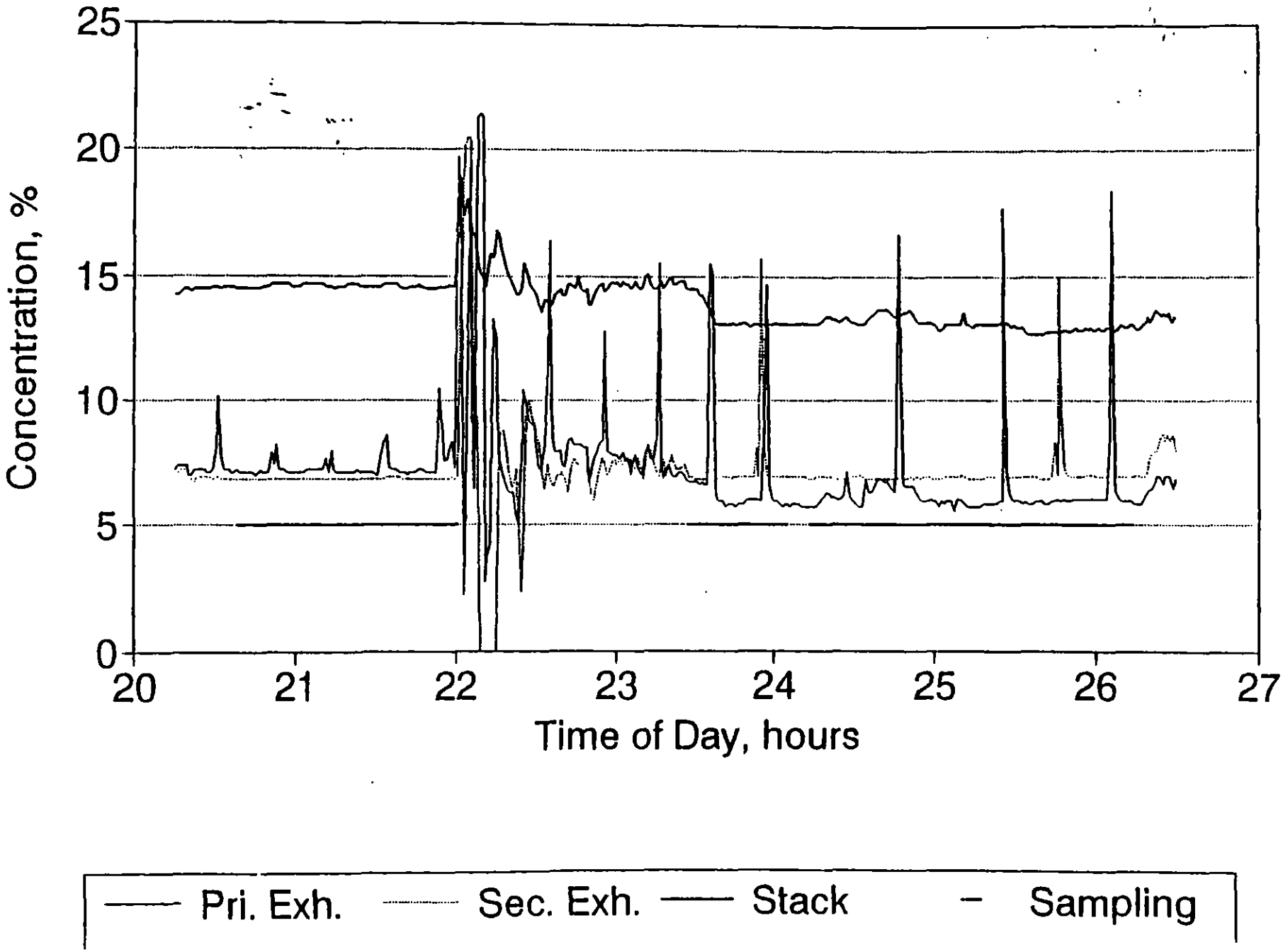
25
20
15
10
5
0
Concentration, %
20
21
22
23
24
25
26
27
Time of Day, hours
Pri. Exh.
Sec. Exh.
Stack
Sampling

TABLE 5-3. INTEGRATED ORSAT STACK DATA

Date	Time	Carbon Dioxide (% Vol.)	Oxygen (% Vol.)	Carbon Monoxide (% Vol.)	Nitrogen (% Vol.)
3/10/92	1530 - 1650	3.9	15.0	0.0	81.1
	1655 - 1755	3.9	15.1	0.0	81.0
	1800 - 1900	3.5	15.4	0.0	81.1
	1910 - 2010	4.1	14.9	0.0	81.0
3/11/92	0800 - 0900	4.0	15.1	0.0	80.9
	0915 - 1015	4.0	15.1	0.0	80.9
	1020 - 1235	3.9	14.9	0.0	81.2
	1240 - 1340	4.1	15.0	0.0	80.9
3/13/92	0835 - 0935	4.8	14.2	0.0	81.0
	0940 - 1040	4.1	14.9	0.0	81.0
	1050 - 1150	3.8	15.1	0.0	81.1
	1150 - 1250	3.8	14.8	0.0	81.4
3/16/92	2045 - 2145	4.2	14.5	0.0	81.3
	2150 - 0015	3.9	15.0	0.0	81.1
	0016 - 0116	4.4	14.6	0.0	81.0
	0120 - 0220	4.5	14.6	0.0	80.9

TABLE 5-4. COMBUSTION EFFICIENCY RESULTS

Date	Test Hour	CO[a] ppm	CO_2[b] ppm	COMB. EFF[c] %
3/10/92	1	12.7	38700	99.97
Test Run 1	2	12.5	38300	99.97
	3	13.8	35300	99.96
	4	12.6	41000	99.97
3/11/92	1	12.7	40000	99.97
Test Run 2	2	13.1	40000	99.97
	3	12.8	39000	99.97
	4	12.7	40700	99.97
3/15/92	1	14.0	48000	99.97
Test Run 3	2	15.3	41300	99.96
	3	11.8	38000	99.97
	4	13.3	38000	99.96
3/16/92	1	12.4	42300	99.97
Test Run 4	2	16.8	39300	99.96
	3	16.5	43700	99.96
	4	15.9	45000	99.96

[a]Based on afterburner exit gas concentrations from PDAR data and corrected to 7% O_2.

[b]Based on Orsat analyses of stack gas.

[c]Comb. Eff = $\frac{[CO_2]}{[CO_2] + [CO]} \times 100\%$

5.3 Categories of Analytical Data

The analytical data for the LIC trial burns are tabulated in this section according to type of analysis as follows:

The results of the determinations of semivolatile organic compounds include those from the analysis of both MM5 samples and process samples for PCDD/F and for other semivolatile organic compounds.

The results of the determinations of volatile organic compounds were obtained from the analyses of both VOST tubes and liquid process samples.

The results of the anion determinations include HCl and HF concentrations that were measured in the stack with the M5AT, as well as F^- and PO_4^{-3} concentrations in the process samples (liquid).

The data from the determinations of metals include the results for 20 elements in the stack (from the MMT) and for 17 elements in the process samples.

The pH measurements were obtained only for the liquid process samples.

Measurements of particulate mass were made from samples obtained with both the M5AT and MMT.

Total hydrocarbon concentrations were measured by CEM.

5.3.1 Results from the Determinations of Semivolatile Organics

The conditions that prevailed during the collection of samples in the MM5 sampling train are delineated in Table 5-5. The table gives details of the train operating parameters and leak checks.

<u>Quantification of PCDF/PCDD components</u>

Example calculations are shown below:

MM5 Train (PCDD/F)
1,2,3,4,7,8,9-HpCDF (SRI Sample No. V04962)
Target analyte

$$\text{Amount (HpCDF)} = \frac{\text{Area (HpCDDF)}}{\text{Area (Internal Standard)}} \cdot \frac{\text{Amount (International Standard}}{\text{RRF}}$$

$$= \frac{1230}{11121} \cdot \frac{2\text{ ng}}{1.515}$$

$$= 0.146\text{ ng}$$

TABLE 5-5. MODIFIED METHOD 5 TRAIN CONDITIONS AND RESULTS

Parameter	Units	Test Run 1	2	3	4
Date	--	3/10/92	3/11/92	3/15/92	3/16/92
Sample Time	minutes	240	240	240	240
Sample Volume	dscf	166.956	166.365	161.607	156.051
Stack Gas Flow Rate	dscfm	9091	8777	8751	8655
Stack Gas Temperature	°F	190	189	192	190
Stack Gas Moisture	%	31.3	32.7	34.9	34.4
Percent Isokinetic		98.1	101.2	98.7	96.3
Oxygen Concentration[a]	%	15.1	15.0	14.8	14.7
CO_2 Concentration[a]	%	3.8	4.0	4.1	4.3
Leak Checks:					
Pitot Pretest		pass	pass	pass	pass
Pitot Post-test		pass	pass	pass	pass
Train Pretest	cfm at	0.000	0.000	0.000	0.000
	in. Hg	15	18	15	15
Train Post-test	cfm at	0.000	0.000	0.000	0.000
	in. Hg	13	15	11	14

[a]Gas composition from Orsat analysis.

MM5 Train (PCDD/Fs)
Total HpCDF (SRI Sample No. V04962)

$$\text{Amount (HpCDFs)} = \frac{\text{Area (HpCDFs)}}{\text{Area (Internal Standards)}} \cdot \frac{\text{Amount (Internal Standards)}}{\text{RRF}}$$

$$= \frac{1256}{12599 + 11121} \cdot \frac{4\ \text{ng}}{1.901}$$

$$= 0.11\ \text{ng}$$

Total TCDDs, TCDFs, PECDFs, PECDDs, HXCDFs, HXCDDs, HPCDFs, HPCDFs, HPCDDS, OCDF, and OCDD were estimated by using an average response factor for each group and by summing the estimated quantities of the compounds that meet the retention-time requirements and isotopic-abundance requirements of Method 8290. Appendix H gives data sheets for the PCDD/F analytes.

Quantification of semivolatile components

Examples of the calculations are shown below:

MM5 Train (BNA)
Benzoic acid (BA) (SRI Sample No. H01271)

$$\text{Amount (BA)} = \frac{\text{Area (BA)}}{\text{Area (Internal Standard)}} \cdot \frac{\text{Amount (Internal Standard)}}{\text{RRF}}$$

$$= \frac{6220778}{5442405} \cdot \frac{40\ \mu\text{g}}{0.185}$$

$$= 390.7\ \mu\text{g}$$

Brine (BNA)
Benzoic acid (BA) (SRI Sample No. H01186)

$$\text{Amount (BA)} = \frac{\dfrac{\text{Area (BA)}}{\text{Area (Internal Standard)}} \cdot \dfrac{\text{Amount (Internal Standard)}}{\text{RRF}}}{\text{Volume of samples}}$$

$$= \frac{7636523}{6085859} \cdot \frac{40\ \mu\text{g}}{0.185} \cdot \frac{2}{0.473\ \text{L}}$$

$$= 1147\ \mu\text{g/L}$$

Table 5-6 gives the results of the analyses for target PCDD/F components, and Table 5-7 summarizes the PCDD/F results for the stack gas. Levels of 1,2,3,4,7,8,9-HpCDF found in the stack gas approached the method limit of detection. The incinerator influent for this trial burn contained few chlorinated compounds; hence, the formation of significant amounts of PCDD/Fs in the process was not expected. The above compound was also found in blanks at similar levels, therefore no toxicity equivalent (TE) was calculated.

6/10/82

TABLE 5-6. DETERMINATION OF TARGET PCDFS/PCDDS IN MM5 TRAINS FROM LIC

Sample Description	SRI Sample No.	Amount found (nanograms)																	
		2,3,7,8-TCDF	2,3,7,8-TCDD	1,2,3,7,8-PECDF	2,3,4,7,8-PECDF	1,2,3,7,8-PECDD	1,2,3,4,7,8-HXCDF	1,2,3,6,7,8-HXCDF	1,2,3,7,8,9-HXCDF	2,3,4,6,7,8-HXCDF	1,2,3,4,7,8-HXCDD	1,2,3,6,7,8-HXCDD	1,2,3,7,8,9-HXCDD	1,2,3,4,6,7,8-HPCDF	1,2,3,4,7,8,9-HPCDF	1,2,3,4,6,7,8-HPCDD	OCDF	OCDD	Surrogate[a] (% recov)
		Quality Control Analyses																	
Lab Blank No. 3	V04961	ND[b]	ND	ND	ND	ND	ND	ND	ND	ND	ND	ND	ND	ND	ND	ND	ND	ND	0.507 (63%)
Lab Blank No. 4	V04835	ND	ND	ND	ND	ND	ND	ND	ND	ND	ND	ND	ND	ND	ND	ND	ND	ND	0.318 (40%)
Lab Blank No. 5	V04974	ND	ND	ND	ND	ND	ND	ND	ND	ND	ND	ND	ND	ND	ND	ND	ND	ND	0.443 (55%)
Blank train resin trip blank	V04965	ND	ND	ND	ND	ND	ND	ND	ND	ND	ND	ND	ND	ND	0.13	ND	ND	ND	1.771 (88%)
Blank train filter and front wash	V04963	ND	ND	ND	ND	ND	ND	ND	ND	ND	ND	ND	ND	ND	ND	ND	ND	ND	0.646 (81%)
Blank train resin and back wash	V04962	ND	ND	ND	ND	ND	ND	ND	ND	ND	ND	ND	ND	ND	0.15	ND	ND	ND	0.404 (20%)
Test Run 1 filter and solvent blank	V04975	ND	ND	ND	ND	ND	ND	ND	ND	ND	ND	ND	ND	ND	ND	ND	ND	ND	0.557 (70%)
Blank train field resin and water blank	V04964	ND	ND	ND	ND	ND	ND	ND	ND	ND	ND	ND	ND	ND	0.14	ND	ND	ND	1.73 (87%)
Blank train filter and solvent blank	V04969	ND	ND	ND	ND	ND	ND	ND	ND	ND	ND	ND	ND	ND	ND	ND	ND	ND	0.605 (76%)
Test Run 2 water blank	V04966	ND	ND	ND	ND	ND	ND	ND	ND	ND	ND	ND	ND	ND	ND	ND	ND	ND	0.587 (73%)
XAD-2 matrix spike	V04981	1.05 (131%)	0.867 (108%)	4.00 (100%)	3.91 (97.7%)	4.39 (110%)	4.26 (107%)	4.35 (109%)	3.88 (97%)	4.33 (108%)	4.41 (110%)	3.89 (97.2%)	5.57 (139%)	4.40 (110%)	4.35 (109%)	4.35 (109%)	7.66 (95.8%)	10.8 (135%)	1.12 (152%)
XAD-2 matrix spike duplicate	V04982	1.02 (128%)	0.873 (109%)	4.16 (104%)	4.15 (104%)	4.00 (100%)	4.44 (111%)	4.47 (112%)	4.34 (109%)	4.61 (115%)	4.54 (114%)	4.05 (101%)	5.00 (125%)	4.65 (116%)	4.28 (107%)	4.53 (113%)	8.20 (102%)	10.2 (127%)	0.610 (76%)

TABLE 5-6. Continued

Sample Description	SRI Sample No.	Amount found (nanograms)																	
		2,3,7,8-TCDF	2,3,7,8-TCDD	1,2,3,7,8-PECDF	2,3,4,7,8-PECDF	1,2,3,7,8-PECDD	1,2,3,4,7,8-HXCDF	1,2,3,6,7,8-HXCDF	1,2,3,7,8,9-HXCDF	2,3,4,6,7,8-HXCDF	1,2,3,4,7,8-HXCDD	1,2,3,6,7,8-HXCDD	1,2,3,7,8,9-HXCDD	1,2,3,4,6,7,8-HPCDF	1,2,3,4,7,8,9-HPCDF	1,2,3,4,6,7,8-HPCDD	OCDF	OCDD	Surrogate[a] (% recov)
		Sample Analyses																	
Test Run 1 filter and front wash	V04968	ND	ND	ND	ND	ND	ND	ND	ND	ND	ND	ND	ND	ND	ND	ND	ND	ND	0.526 (70%)
Test Run 1 resin and back wash	V04967	ND	ND	ND	ND	ND	ND	ND	ND	ND	ND	ND	ND	ND	0.22	ND	ND	ND	1.30 (65%)
Test Run 2 filter and front wash	V04977	ND	ND	ND	ND	ND	ND	ND	ND	ND	ND	ND	ND	ND	ND	ND	ND	ND	0.627 (78%)
Test Run 2 resin and back wash	V04976	ND	ND	ND	ND	ND	ND	ND	ND	ND	ND	ND	ND	ND	0.15	ND	ND	ND	1.38 (69%)
Test Run 3 filter and front wash	V04979	ND	ND	ND	ND	ND	ND	ND	ND	ND	ND	ND	ND	ND	ND	ND	ND	ND	0.074 (9%)
Test Run 3 resin and back wash	V04978	ND	ND	ND	ND	ND	ND	ND	ND	ND	ND	ND	ND	ND	0.15	ND	ND	ND	2.14 (107%)
Test Run 4 filter and front wash	V04994	ND	ND	ND	ND	ND	ND	ND	ND	ND	ND	ND	ND	ND	ND	ND	ND	ND	0.564 (71%)
Test Run 4 resin and back wash	V05083	ND	ND	ND	ND	ND	ND	ND	ND	ND	ND	ND	ND	ND	0.15	ND	ND	ND	0.011 (1%)

[a]The surrogate is 37Cl4-2,3,7,8,-tetrachlorodibenzo(1,4)dioxin. Resin samples (V04813, V04810, V04826, V04823, V04825, V04808, and V04828) were spiked with 2.0 ng of the surrogate; the remaining samples were spiked with 0.8 ng of the same surrogate.

[b]ND = Not detected above reporting limit of 0.02 ng for TCDFs and TCDDs; 0.10 ng for PECDFs, PECDDs, HXCDFs, HXCDDs, HPCDFs, and HPCDDs; and 0.20 ng for OCDF and OCDD.

TABLE 5-7. DETERMINATION OF TOTAL PCDFS/PCDDS IN MM5 TRAINS FROM LIC

Sample Description	SRI Sample No.	Amount found (nanograms)									
		TCDF	TCDD	PECDF	PECDD	HXCDF	HXCDD	HPCDF	HPCDD	OCDF	OCDD
		Quality Control Analyses									
Lab Blank No. 3	V04961	ND[a]	ND	ND	ND	ND	ND	ND	ND	ND	ND
Lab Blank No. 4	V04835	ND	ND	ND	ND	ND	ND	ND	ND	ND	ND
Lab Blank No. 5	V04974	ND	ND	ND	ND	ND	ND	ND	ND	ND	ND
Blank train resin trip blank	V04965	ND	ND	ND	ND	ND	ND	ND	ND	ND	ND
Blank train filter and front wash	V04963	ND	ND	ND	ND	ND	ND	ND	ND	ND	ND
Blank train resin and back wash	V04962	ND	ND	ND	ND	ND	ND	0.11	ND	ND	ND
Test Run 1 filter and solvent blank	V04975	ND	ND	ND	ND	ND	ND	ND	ND	ND	ND
Blank train field resin and water blank	V04964	ND	ND	ND	ND	ND	ND	0.10	ND	ND	ND
Blank train filter and solvent blank	V04969	ND	ND	ND	ND	ND	ND	ND	ND	ND	ND
Test Run 2 water blank	V04966	ND	ND	ND	ND	ND	ND	ND	ND	ND	ND
XAD-2 matrix spike	V04981	(131%)[b]	(108%)	(98.8%)	(110%)	(105%)	(116%)	(109%)	(109%)	(95.8%)	(135%)
XAD-2 matrix spike duplicate	V04982	(128%)	(109%)	(104%)	(110%)	(112%)	(113%)	(112%)	(113%)	(102%)	(127%)

TABLE 5-7. Continued

Sample Description	SRI Sample No.	Amount found (nanograms)									
		TCDF	TCDD	PECDF	PECDD	HXCDF	HXCDD	HPCDF	HPCDD	OCDF	OCDD
		Sample Analyses									
Test Run 1 filter and front wash	V04968	ND	ND	ND	ND	ND	ND	ND	ND	ND	ND
Test Run 1 resin and back wash	V04967	ND	ND	ND	ND	ND	ND	0.16	ND	ND	ND
Test Run 2 filter and front wash	V04977	ND	ND	ND	ND	ND	ND	ND	ND	ND	ND
Test Run 2 resin and back wash	V04976	ND	ND	ND	ND	ND	ND	0.10	ND	ND	ND
Test Run 3 filter and front wash	V04979	ND	ND	ND	ND	ND	ND	ND	ND	ND	ND
Test Run 3 resin and back wash	V04978	ND	ND	ND	ND	ND	ND	0.10	ND	ND	ND
Test Run 4 filter and front wash	V04994	ND	ND	ND	ND	ND	ND	ND	ND	ND	ND
Test Run 4 resin and back wash	V05083	ND	ND	ND	ND	ND	ND	ND	ND	ND	ND

[a]ND = Not detected above reporting limit of 0.02 ng for TCDFs and TCDDs; 0.10 ng for PECDFs, PECDDs, HXCDFs, HXCDDs, HPCDFs, and HPCDDs; and 0.20 ng for OCDFs and OCDDs.

[b]The percent recovery of spiked components is enclosed in parentheses.

Note: Occasionally a quantity listed for a "Total PCDD" or "Total PCDF" is less than the quantity for one of the corresponding target compounds. This results either because an "average" response factor is d for the calculation of the "total" quantity or because the quantity of a potentially interfering component is subtotaled from the quantity of the "total" but not the target compund as specified by Method 8290.

Table 5-8 summarizes the results of the determinations of the other semivolatile compounds in stack gas. Low levels of benzyl alcohol, 2-methylphenol, 4-methylphenol and benzoic acid were found in MM5 samples from each of the four runs. However, these compounds were also present in the blank train and in field blanks. In addition, some of the sample-train extracts contained one or more phthalate esters. But phthalate esters are used as plasticizers and are found in almost all types of samples at various levels. Appendix J gives data sheets for the GC/MS analyses that were performed for determining the semivolatile analytes.

The samples of process liquids (water, liquor, brine, and caustic) and fuel oil were analyzed for PCDD/F. Tables 5-9, 5-10, 5-11, 5-12, and 5-13 give the results of these analyses. No PCDD/F were detected.

Tables 5-14, 5-15, 5-16, and 5-17 summarize the results of the analyses of these media for the semivolatile compounds. Only benzoic acid was found in a few samples.

5.3.2 Results from the Determinations of Volatile Organics

The results of the analyses of VOST samples and aqueous process samples for volatile organics are summarized in Tables 5-18, 5-19, 5-20, 5-21 and 5-22. The results for VOST tubes and condensates are given in terms of total nanograms collected. For aqueous process samples, results are given as concentrations in units of μg/L.

The aqueous process samples contained only a few components, such as acetone and 2-butanone, that fell above the lowest level of the calibration curve. Acetone and 2-butanone are common laboratory and industrial contaminants.

The following is a sample calculation for Run 1 Process Water Pretest, for the concentration of 2-butanone:

$$\frac{\text{(Area of component detected)(Concentration of internal standard)}}{\text{(Area of internal standard)(Response Factor from 5-pt. calibration)}} =$$

$$\frac{(2241)(50\ \mu g/L)}{(16764)(0.109)} = 6.14\ \mu g/L$$

Most of the compounds found in VOST tubes were at or below the lowest calibration level of 100 ng. Moreover, 1,1,1-trichloroethane and toluene were present in almost all lab blanks.

In Runs 3 and 4, the VOST tubes showed unusually high levels of acetone, methylene chloride, and toluene, which were not present in field or lab blanks. These three compounds were also found in extremely high levels in the condensates and condensate blank from Runs 3 and 4. This phenomenon appears to have been due to field contamination, although the compounds in question were not found in the VOST field blank. Perhaps the VOST field blank was not exposed to the same contaminated environment as the samples from Runs 3 and 4. All compounds found in the condensates, including extremely high levels of acetone, were also present in the condensate blanks.

TABLE 5-8. SEMIVOLATILE RESULTS SUMMARY FOR MM5 TRAIN

Sample Description	SRI Run No.	Compound	Amount, µg
	Quality Control Analyses		
SRI Extraction Blank	H01240	Benzyl alcohol	791
Lab Extraction Blank 3	H01283	Benzyl alcohol	1130
Lab Blank No. 5	H01293	Benzyl alcohol	1070
		Phenol	41.7
Trip blank No. BB	H01268	Benzyl alcohol	946
Blank train No. BB filter and front wash	H01285	Benzyl alcohol	2020
		2-Methylphenol	15.5
		4-Methylphenol	10.7
Blank train No. BB resin and back wash	H01284	Benzyl alcohol	474
Blank train No. BB filter and solvent blank	H01287	Benzyl alcohol	177
Blank train No. BB field and water blank	H01286	Phenol	380
		Benzyl alcohol	267
		2-Methylphenol	15
		4-Methylphenol	16.7
		Benzoic acid	45.4
Test Run 1 filter and solvent blank	H01288	Benzyl alcohol	379
Test Run 2 water and solvent blank	H01289	Benzyl alcohol	24.3

Sample Description	SRI Run No.	Compound	Amount, µg
		Sample Analyses	
Test Run 1 filter and front wash	M01270	Benzyl alcohol	508
Test Run 1 resin and back wash	M01269	Benzyl alcohol	1380
		2-Methylphenol	123
		4-Methylphenol	90.9
		Dimethyl phthalate	34.3
		bis(2-Ethylhexyl) phthalate	48.4
Test Run 2 filter and front wash	M01272	Benzyl alcohol	103
Test Run 2 resin and back wash	M01271	Benzyl alcohol	916
		2-Methylphenol	110
		4-Methylphenol	93.1
		Benzoic acid	390
		Dimethyl phthalate	41
		bis(2-Ethylhexyl) phthalate	51.1
Test Run 3 filter and front wash	M01277	Benzyl alcohol	476
		Naphthalene	6.58
Test Run 4 resin and back wash	M01276	Benzyl alcohol	915
		2-Methylphenol	64.2
		4-Methylphenol	65.7
		Benzoic acid	404
		Dimethyl phthalate	44.8
		bis(2-Ethylhexyl) phthalate	19.2
Test Run 4 filter and front wash	M01279	Benzyl alcohol	593
		Naphthalene	8.08
Test Run 4 resin and back wash	M01278	Benzyl alcohol	2130
		2-Methylphenol	111
		4-Methylphenol	93.6
		Benzoic acid	478
		Dimethyl phthalate	29
		bis(2-Ethylhexyl) phthalate	27.8

See Appendix J for surrogate recoveries and matrix spike results.
[a]ND = Not detected

TABLE 5-9. DETERMINATION OF TOTAL PCDFS/PCDDS IN PROCESS WATER SAMPLES FROM LIC

Sample Description	SRI Sample No.	Concentration found (ng/L)									
		TCDF	TCDD	PECDF	PECDD	HXCDF	HXCDD	HPCDF	HPCDD	OCDF	OCDD
SRI Blank (Test Run 1)	V04897	ND[a]	ND	ND	ND	ND	ND	ND	ND	ND	ND
SRI Blank (Test Run 2)	V04938	ND	ND	ND	ND	ND	ND	ND	ND	ND	ND
SRI Blank (Test Run 3)	V04987	ND	ND	ND	ND	ND	ND	ND	ND	ND	ND
SRI Blank (Test Run 4)	V05001	ND	ND	ND	ND	ND	ND	ND	ND	ND	ND
Test Run 3 Post Test (Matrix Spike)	V04989	(128%)[b]	(117%)	(105%)	(108%)	(105%)	(107%)	(105%)	(109%)	(103%)	(102%)
Test Run 3 Post Test (Matrix Spike Duplicate)	V04990	(124%)	(120%)	(102%)	(109%)	(107%)	(108%)	(106%)	(112%)	(99.1%)	(103%)
Test Run No. 1 Pretest	V04900	ND	ND	ND	ND	ND	ND	ND	ND	ND	ND
Test Run No. 1 Post Test	V04901	ND	ND	ND	ND	ND	ND	ND	ND	ND	ND
Test Run No. 2 Pretest	V04931	ND	ND	ND	ND	ND	ND	ND	ND	ND	ND
Test Run No. 2 Post Test	V04941	ND	ND	ND	ND	ND	ND	ND	ND	ND	ND
Test Run No. 3 Pretest	V04992	ND	ND	ND	ND	ND	ND	ND	ND	ND	ND
Test Run No. 3 Post Test	V04991	ND	ND	ND	ND	ND	ND	ND	ND	ND	ND
Test Run No. 4 Pretest	V05007	ND	ND	ND	ND	ND	ND	ND	ND	ND	ND
Test Run No. 4 Post Test	V05002	ND	ND	ND	ND	ND	ND	ND	ND	ND	ND

[a]ND = Not detected above reporting limit of 0.04 ng/L for TCDFs and TCDDs; 0.20 ng/L for PECDFs, PECDDs, HXCDFs, HXCDDs, HPCDFs, and HPCDDs; and 0.40 ng/L for OCDFs and OCDDs.

[b]The percent recovery of spiked components is enclosed in parentheses.

TABLE 5-10. DETERMINATION OF TOTAL PCDFS/PCDDS IN SCRUBBER LIQUOR SAMPLES FROM LIC

Sample Description	SRI Sample No.	Concentration found (ng/L)									
		TCDF	TCDD	PECDF	PECDD	HXCDF	HXCDD	HPCDF	HPCDD	OCDF	OCDD
SRI Blank (Test Run 1)	V04897	ND[a]	ND	ND	ND	ND	ND	ND	ND	ND	ND
SRI Blank (Test Run 2)	V04938	ND	ND	ND	ND	ND	ND	ND	ND	ND	ND
SRI Blank (Test Run 3)	V04987	ND	ND	ND	ND	ND	ND	ND	ND	ND	ND
SRI Blank (Test Run 3/Test Run 4)	V05001	ND	ND	ND	ND	ND	ND	ND	ND	ND	ND
Test Run 3 Post Test (Matrix Spike)	V05005	(113%)[b]	(105%)	(101%)	(106%)	(101%)	(101%)	(100%)	(104%)	(92.5%)	(96.8%)
Test Run 3 Post Test (Matrix Spike Duplicate)	V05006	(113%)	(106%)	(95.8%)	(103%)	(106%)	(99.0%)	(100%)	(106%)	(93.4%)	(100%)
Test Run No. 1 Pretest	V05027	ND	ND	ND	ND	ND	ND	ND	ND	ND	ND
Test Run No. 1 Post test	V04902	ND	ND	ND	ND	ND	ND	ND	ND	ND	ND
Test Run No. 2 Pretest	V04949	ND	ND	ND	ND	ND	ND	ND	ND	ND	ND
Test Run No. 2 Post test	V04951	ND	ND	ND	ND	ND	ND	ND	ND	ND	ND
Test Run No. 3 Pretest	V05018	ND	ND	ND	ND	ND	ND	ND	ND	ND	ND
Test Run No. 3 Post test	V04993	ND	ND	ND	ND	ND	ND	ND	ND	ND	ND
Test Run No. 4 Pretest	V05003	ND	ND	ND	ND	ND	ND	ND	ND	ND	ND
Test Run No. 4 Post Test	V05004	ND	ND	ND	ND	ND	ND	ND	ND	ND	ND

[a]ND = Not detected above reporting limit of 0.04 ng/L for TCDFs and TCDDs; 0.20 ng/L for PECDFs, PECDDs, HXCDFs, HXCDDs, HPCDFs, and HPCDDs; and 0.40 ng/L for OCDFs and OCDDs.

[b]The percent recovery of spiked components is enclosed in parentheses.

TABLE 5-11. DETERMINATION OF TOTAL PCDFS/PCDDS IN BRINE SAMPLES FROM LIC

Sample Description	SRI Sample No.	Concentration found (ng/L)									
		TCDF	TCDD	PECDF	PECDD	HXCDF	HXCDD	HPCDF	HPCDD	OCDF	OCDD
SRI Blank (Test Run 1)	V04897	ND[a]	ND	ND	ND	ND	ND	ND	ND	ND	ND
SRI Blank (Test Run 2)	V04938	ND	ND	ND	ND	ND	ND	ND	ND	ND	ND
SRI Blank (Test Run 3/Test Run 4)	V05001	ND	ND	ND	ND	ND	ND	ND	ND	ND	ND
Test Run 3 Post Test (Matrix Spike)	V05019	(112%)[b]	(112%)	(96.2%)	(106%)	(106%)	(105%)	(103.7%)	(108%)	(96.2%)	(102%)
Test Run 3 Post Test (Matrix Spike Duplicate)	V05020	(114%)	108%)	(100%)	(112%)	(107%)	(106%)	(108%)	(110%)	(96.7%)	(102%)
Test Run No. 1 Pretest	V04911	ND	ND	ND	ND	ND	ND	ND	ND	ND	ND
Test Run No. 1 Post test	V04912	ND	ND	ND	ND	ND	ND	ND	ND	ND	ND
Test Run No. 2 Pretest	V04950	ND	ND	ND	ND	ND	ND	ND	ND	ND	ND
Test Run No. 2 Post test	V04952	ND	ND	ND	ND	ND	ND	ND	ND	ND	ND
Test Run No. 3 Pretest	V05017	ND	ND	ND	ND	ND	ND	ND	ND	ND	ND
Test Run No. 3 Post test	V05021	ND	ND	ND	ND	ND	ND	ND	ND	ND	ND
Test Run No. 4 Pretest	V05008	ND	ND	ND	ND	ND	ND	ND	ND	ND	ND
Test Run No. 4 Post Test	V05014	ND	ND	ND	ND	ND	ND	ND	ND	ND	ND

[a]ND = Not detected above reporting limit of 0.04 ng/L for TCDFs and TCDDs; 0.20 ng/L for PECDFs, PECDDs, HXCDFs, HXCDDs, HPCDFs, and HPCDDs; and 0.40 ng/L for OCDFs and OCDDs.

[b]The percent of spiked components is enclosed in parentheses.

TABLE 5-12. DETERMINATION OF TOTAL PCDFS/PCDDS IN CAUSTIC SAMPLES FROM LIC

Sample Description	SRI Sample No.	Concentration found (ng/L)									
		TCDF	TCDD	PECDF	PECDD	HXCDF	HXCDD	HPCDF	HPCDD	OCDF	OCDD
SRI Blank (Test Run 1)	V04897	ND[a]	ND	ND	ND	ND	ND	ND	ND	ND	ND
SRI Blank (Test Run 2)	V04938	ND	ND	ND	ND	ND	ND	ND	ND	ND	ND
SRI Blank (Test Run 3)	V05013	ND	ND	ND	ND	ND	ND	ND	ND	ND	ND
SRI Blank (Test Run 4)	V05001	ND	ND	ND	ND	ND	ND	ND	ND	ND	ND
Test Run 3 Post Test (Matrix Spike)	V05029	(114%)[b]	(109%)	(96.9%)	(107%)	(111%)	(107%)	(106%)	(111%)	(101%)	(104%)
Test Run 3 Post Test (Matrix Spike Duplicate)	V05030	(113%)	(111%)	(98.8%)	(108%)	(106%)	(107%)	(106%)	(108%)	(100%)	(103%)
Test Run No. 1 Pretest	V04905	ND	ND	ND	ND	ND	ND	ND	ND	ND	ND
Test Run No. 1 Post test	V04914	ND	ND	ND	ND	ND	ND	ND	ND	ND	ND
Test Run No. 2 Pretest	V04942	ND	ND	ND	ND	ND	ND	ND	ND	ND	ND
Test Run No. 2 Post test	V04943	ND	ND	ND	ND	ND	ND	ND	ND	ND	ND
Test Run No. 3 Pretest	V04995	ND	ND	ND	ND	ND	ND	ND	ND	ND	ND
Test Run No. 3 Post test	V05028	ND	ND	ND	ND	ND	ND	ND	ND	ND	ND
Test Run No. 4 Pretest	V05015	ND	ND	ND	ND	ND	ND	ND	ND	ND	ND
Test Run No. 4 Post Test	V05016	ND	ND	ND	ND	ND	ND	ND	ND	ND	ND

[a]ND = Not detected above reporting limit of 0.04 ng/L for TCDFs and TCDDs; 0.20 ng/L for PECDFs, PECDDs, HXCDFs, HXCDDs, HPCDFs, and HPCDDs; and 0.40 ng/L for OCDFs and OCDDs.

[b]The percent recovery of spiked components is enclosed in parentheses.

TABLE 5-13. DETERMINATION OF TOTAL PCDFS/PCDDS IN FUEL SAMPLES FROM LIC

Sample Description	SRI Sample No.	Amount found (ng/kg)									
		TCDF	TCDD	PECDF	PECDD	HXCDF	HXCDD	HPCDF	HPCDD	OCDF	OCDD
SRI Blank	V05026	ND[a]	ND	ND	ND	ND	ND	ND	ND	ND	ND
SRI Blank	V05085	ND	ND	ND	ND	ND	ND	ND	ND	ND	ND
Test Run 3 Post Test (Matrix Spike)	V05060	(115%)[b]	(118%)	(97.6%)	(102%)	(108%)	(109%)	(104%)	(109%)	(106%)	(104%)
Test Run 3 Post Test (Matrix Spike Duplicate)	V05061	(112%)	(110%)	(99%)	(104%)	(112%)	(106%)	(107%)	(101%)	(102%)	(101%)
Test Run No. 1 Pretest	V05047	ND	ND	ND	ND	ND	ND	ND	ND	ND	ND
Test Run No. 1 Post test	V05055	ND	ND	ND	ND	ND	ND	ND	ND	ND	ND
Test Run No. 2 Pretest	V05084	ND	ND	ND	ND	ND	ND	ND	ND	ND	ND
Test Run No. 2 Post test	V05056	ND	ND	ND	ND	ND	ND	ND	ND	ND	ND
Test Run No. 3 Pretest	V05057	ND	ND	ND	ND	ND	ND	ND	ND	ND	ND
Test Run No. 3 Post Test	V05058	ND	ND	ND	ND	ND	ND	ND	ND	ND	ND
Test Run No. 4 Pretest	V05081	ND	ND	ND	ND	ND	ND	ND	ND	ND	ND
Test Run No. 4 Post Test	V05082	ND	ND	ND	ND	ND	ND	ND	ND	ND	ND

[a]ND = Not detected above reporting limit of 10 ng/kg for TCDFs and TCDDs; 50 ng/kg for PECDFs, PECDDs, HXCDFs, HXCDDs, HPCDFs, and HPCDDs; and 100 ng/kg for OCDFs and OCDDs.

[b]The percent recovery of spiked components is enclosed in parentheses.

TABLE 5-14. SEMIVOLATILE RESULTS SUMMARY FOR TEST RUN 1

Sample ID[a]	Run No.	Compound	Concentration µg/L
Lab blank (Scrubber brine)	H01117	ND[b]	
Lab blank (Scrubber liquor)	H01117	ND	
Lab blank (Process water)	H01161	ND	
Lab blank (Caustic)	H01117	ND	
Lab blank (Fuel oil)	H01350	ND	
Scrubber brine pretest	H01120	ND	
Scrubber brine post-test	H01121	ND	
Scrubber liquor pretest	H01118	ND	
Scrubber liquor post-test	H01119	ND	
Process water pretest	H01166	ND	
Process water post-test	H01167	ND	
Caustic pretest	H01122	ND	
Caustic post-test	H01123	ND	
Fuel oil pretest	H01364	ND	
Fuel oil post-test	H01365	ND	

[a]See Appendix VII for surrogate recoveries and matrix spike results.

[b]ND = None detected.

TABLE 5-15. SEMIVOLATILE RESULTS SUMMARY FOR TEST RUN 2

Sample ID	Run No.	Compound	Concentration µg/L
Lab blank (Scrubber brine)	H01130	ND[b]	
Lab blank (Scrubber liquor)	H01130	ND	
Lab blank (Process water)	H01161	ND	
Lab blank (Caustic)	H01130	ND	
Lab blank (Fuel oil)	H01350	ND	
Scrubber brine pretest	H01133	ND	
Scrubber brine post-test	H01134	ND	
Scrubber liquor pretest	H01131	ND	
Scrubber liquor post-test	H01132	ND	
Process water pretest	H01170	ND	
Process water post-test	H01175	ND	
Caustic pretest	H01135	ND	
Caustic post-test	H01136	ND	
Fuel oil pretest	H01366	ND	
Fuel oil post-test	H01367	ND	

[a]See Appendix VIIB for surrogate recoveries and matrix spike results.

[b]ND = None detected.

TABLE 5-16. SEMIVOLATILE RESULTS SUMMARY FOR TEST RUN 3

Sample ID[a]	Run No.	Compound	Concentration µg/L
Lab blank (Scrubber brine)	H01184	ND[b]	
Lab blank (Scrubber liquor)	H01143	ND	
Lab blank (Process water)	H01161	ND	
Lab blank (Caustic)	H01206	ND	
Lab blank (Fuel oil)	H01350	ND	
Scrubber brine pretest	H01186	Benzoic acid	1140
Scrubber brine post-test	H01187	Benzoic acid	113
Scrubber liquor pretest	H01185	ND	
Scrubber liquor post-test	H01152	ND	
Process water pretest	H01176	ND	
Process water post-test	H01177	ND	
Caustic pretest	H01207	ND	
Caustic post-test	H01208	ND	
Fuel oil pretest	H01370	ND	
Fuel oil post-test	H01371	ND	

[a]See Appendix VIIB for surrogate recoveries and matrix spike results.

[b]ND = None detected.

TABLE 5-17. SEMIVOLATILE RESULTS SUMMARY FOR TEST RUN 4

Sample ID	Run No.	Compound	Concentration µg/L
Lab blank (Scrubber brine)	H01184	ND[b]	
Lab blank (Scrubber liquor)	H01184	ND	
Lab blank (Process water)	H01161	ND	
Lab blank (Caustic)	H01184	ND	
Lab blank (Fuel oil)	H01350	ND	
Scrubber brine pretest	H01198	Benzoic acid	5784
Scrubber brine post-test	H01199	Benzoic acid	853
Scrubber liquor pretest	H01200	ND	
Scrubber liquor post-test	H01201	ND	
Process water pretest	H01178	ND	
Process water post-test	H01179	ND	
Caustic pretest	H01196	ND	
Caustic post-test	H01197	ND	
Fuel oil pretest	H01374	ND	
Fuel oil post-test	H01375	ND	

[a]See Appendix VIIB for surrogate recoveries and matrix spike results.

[b]ND = None detected.

Table 5-18. VOST Volatile Organic Results Summary
Test Run 1

Sample ID	Sample No.	Compound:	Amount(ng)
Pair #1			
Tenax	5J-1-90	Methylene Chloride	109
Tenax/Charcoal	5J-1-91	2-Butanone	1990
		1,1,1-Trichloroethane	164
		Benzene	67.0
		Toluene	139
		Dibromochloromethane	18.0
		m- & p- Xylene	20.0
		Styrene	5.00
		o- Xylene	25.0
		Bromoform	79.0
Pair #2			
Tenax	5J-1-92	Acetone	1270
Tenax/Charcoal	5J-1-93	Methylene Chloride	93.0
		1,1,1-Trichloroethane	110
		Benzene	44.0
		Toluene	51.0
		Dibromochloromethane	19.0
		Ethylbenzene	12.0
		m- & p- Xylene	24.0
		o- Xylene	30.0
		Bromoform	92.0
Pair #3			
Tenax	5J-1-94	Acetone	1530
Tenax/Charcoal	5J-1-95	Methylene Chloride	189
		2-Butanone	1600
		1,1,1-Trichloroethane	68.0
		Benzene	58.0
		Toluene	56.0
		Ethylbenzene	9.00
		m- & p- Xylene	22.0
		o- Xylene	22.0
		Bromoform	38.0
Pair #4			
Tenax	5J-1-96	Acetone	796
Tenax/Charcoal	5J-1-97	Methylene Chloride	97.0
		2-Butanone	647
		1,1,1-Trichloroethane	166
		Benzene	58.0
		Toluene	40.0
		Ethylbenzene	9.00
		m- & p- Xylene	20.0
		o- Xylene	23.0
		Bromoform	8.00

(continued)

Table 5-18 (continued)

Sample ID	Sample No.	Compound:	Amount(ng)
Field Blank			
Tenax	5J-1-98	Methylene Chloride	39.0
Tenax/Charcoal	5J-1-99	1,1,1-Trichloroethane	59.0
		Toluene	16.0
Trip Blank			
Tenax	4J-6-105	Methylene Chloride	17.0
Tenax/Charcoal	4J-6-106	1,1,1-Trichloroethane	46.0
		Toluene	14.0
Cond #1	5J-1-102	Acetone	164000
		Methylene Chloride	269
		1,1,1-Trichloroethane	225
		Toluene	21.2
Cond #2	5J-1-103	Acetone	152000
		Methylene Chloride	214
		1,1,1-Trichloroethane	196
		Toluene	55.6
Cond #3	5J-1-104	Acetone	144000
		Methylene Chloride	217
		1,1,1-Trichloroethane	67.2
		Toluene	53.2
Cond #4	5J-1-105	Acetone	147000
		Methylene Chloride	211
		2-Butanone	1064
		1,1,1-Trichloroethane	250
		Toluene	49.2
Cond Blank	5J-1-106	Acetone	166000
		Methylene Chloride	259
		1,1,1-Trichloroethane	109
		Toluene	85.2

Table 5-19. VOST Volatile Organic Results Summary
Test Run 2

Sample ID	Sample No.	Compound:	Amount(ng)
Pair #1			
Tenax	5J-2-83	Acetone	752
Tenax/Charcoal	5J-2-84	Methylene Chloride	217
		2-Butanone	1530
		1,1,1-Trichloroethane	29.0
		Benzene	70.0
		Toluene	56.0
		Ethylbenzene	11.0
		m- & p- Xylene	19.0
		o- Xylene	21.0
		Bromoform	33.0
Pair #2			
Tenax	5J-2-85	Acetone	435
Tenax/Charcoal	5J-2-86	Methylene Chloride	296
		2-Butanone	617
		1,1,1-Trichloroethane	71.0
		Benzene	58.0
		Toluene	42.0
		Ethylbenzene	11.0
		m- & p- Xylene	20.0
		o- Xylene	23.0
		Bromoform	20.0
Pair #3			
Tenax	5J-2-87	Acetone	827
Tenax/Charcoal	5J-2-88	Methylene Chloride	148
		2-Butanone	1590
		1,1,1-Trichloroethane	56.0
		Benzene	65.0
		Toluene	73.0
		Ethylbenzene	23.0
		m- & p- Xylene	40.0
		o- Xylene	48.0
		Bromoform	11.0
Pair #4			
Tenax	5J-2-89	Acetone	1090
Tenax/Charcoal	5J-2-90	Methylene Chloride	94
		2-Butanone	1460
		1,1,1-Trichloroethane	40.0
		Benzene	67.0
		Toluene	37.0
		Ethylbenzene	8.00
		m- & p- Xylene	18.0
		o- Xylene	23.0

(continued)

Table 5-19 (continued)

Sample ID	Sample No.	Compound:	Amount(ng)
Field Blank			
Tenax	5J-2-91	Methylene Chloride	19.0
Tenax/Charcoal	5J-2-92[a]	Toluene	7.00
Cond #1	5J-2-93	Acetone	144000
		Methylene Chloride	260
		1,1,1-Trichloroethane	121
		Toluene	54.4
Cond #2	5J-2-94	Acetone	119000
		Methylene Chloride	222
		1,1,1-Trichloroethane	82.8
		Toluene	50.4
Cond #3	5J-2-95	Acetone	126000
		Methylene Chloride	218
		1,1,1-Trichloroethane	156
		Toluene	34.4
Cond #4	5J-2-96	Acetone	723000
		Methylene Chloride	140000
		1,1,1-Trichloroethane	46.4
		Toluene	63000
Cond Blank	5J-2-97	Acetone	317000
		Methylene Chloride	43000
		1,1,1-Trichloroethane	132
		Toluene	19200

[a]No data obtained for T/C take because of computer malfunction.

Table 5-20. VOST Volatile Organic Results Summary
Test Run 3

Sample ID	Sample No.	Compound:	Amount(ng)
Pair #1			
Tenax	5J-3-119	Acetone	19500
Tenax/Charcoal	5J-3-120	Methylene Chloride	4260
		1,1,1-Trichloroethane	74.0
		Benzene	131
		Toluene	3820
		Ethylbenzene	18.0
		m- & p- Xylene	31.0
		o- Xylene	37.0
		Bromoform	64.0
Pair #2			
Tenax	5J-3-121	Methylene Chloride	7140
Tenax/Charcoal	5J-3-122	2-Butanone	1980
		1,1,1-Trichloroethane	18.0
		Benzene	116
		Toluene	4570
		Ethylbenzene	22.0
		m- & p- Xylene	45.0
		o- Xylene	57.0
		Bromoform	75.0
Pair #3			
Tenax	5J-3-123	Methylene Chloride	6480
Tenax/Charcoal	5J-3-124	2-Butanone	1650
		1,1,1-Trichloroethane	136
		Benzene	101
		Toluene	4070
		Ethylbenzene	14.0
		m- & p- Xylene	22.0
		o- Xylene	27.0
		Bromoform	56.0
Pair #4			
Tenax	5J-3-125	Acetone	2780
Tenax/Charcoal	5J-3-126	Methylene Chloride	9920
		2-Butanone	911
		1,1,1-Trichloroethane	43.0
		Benzene	90.0
		Toluene	9390
		Ethylbenzene	21.0
		m- & p- Xylene	37.0
		o- Xylene	45.0
		Bromoform	36.0

(continued)

Table 5-20 (continued)

Sample ID	Sample No.	Compound:	Amount(ng)
Field Blank			
Tenax	5J-3-127	Methylene Chloride	22.0
Tenax/Charcoal	5J-3-128	1,1,1-Trichloroethane	55.0
		Benzene	5.00
		Toluene	26.0
Cond #1	5J-3-129	Acetone	621000
		Methylene Chloride	87900
		1,1,1-Trichloroethane	22.8
		Toluene	36600
Cond #2	5J-3-130	Acetone	752000
		Methylene Chloride	92400
		2-Butanone	354
		1,1,1-Trichloroethane	196
		Toluene	38500
Cond #3	5J-3-131	Acetone	701000
		Methylene Chloride	96300
		2-Butanone	495
		1,1,1-Trichloroethane	99.6
		Toluene	39800
Cond #4	5J-3-132	Acetone	769000
		Methylene Chloride	70900
		2-Butanone	833
		1,1,1-Trichloroethane	106
		Toluene	52300
Cond Blank	5J-3-133	Acetone	592000
		Methylene Chloride	129000
		2-Butanone	619
		1,1,1-Trichloroethane	27.6
		Toluene	47400

Table 5-21. VOST Volatile Organic Results Summary
Test Run 4

Sample ID	Sample No.	Compound:	Amount(ng)
Pair #1			
Tenax	5J-4-83	Methylene Chloride	4500
Tenax/Charcoal	5J-4-84	2-Butanone	1420
		1,1,1-Trichloroethane	62.0
		Benzene	69.0
		Toluene	7370
		Ethylbenzene	5.00
		m- & p- Xylene	24.0
		o- Xylene	29.0
		Bromoform	8.00
Pair #2			
Tenax	5J-4-85	Acetone	2400
Tenax/Charcoal	5J-4-86	Methylene Chloride	4890
		2-Butanone	1520
		1,1,1-Trichloroethane	28.0
		Benzene	439
		Toluene	5400
		Ethylbenzene	11.0
		m- & p- Xylene	24.0
		o- Xylene	26.0
		Bromoform	19.0
Pair #3			
Tenax	5J-4-87	Acetone	2240
Tenax/Charcoal	5J-4-88	Methylene Chloride	5980
		2-Butanone	2000
		1,1,1-Trichloroethane	40.0
		Benzene	142
		Toluene	8540
		Ethylbenzene	13.0
		m- & p- Xylene	24.0
		o- Xylene	29.0
		Bromoform	27.0
Pair #4			
Tenax	5J-4-89	2-Butanone	1990
Tenax/Charcoal[a]		1,1,1-Trichloroethane	27.0
		Benzene	103
		Toluene	81.0
		Ethylbenzene	18.0
		m- & p- Xylene	31.0
		o- Xylene	38.0
		Bromoform	63.0
Field Blank			
Tenax	5J-4-91	1,1,1-Trichloroethane	11.0
Tenax/Charcoal	5J-4-92	Benzene	5.00

(continued)

Table 5-21 (continued)

Sample ID	Sample No.	Compound:	Amount(ng)
Trip Blank			
Tenax	5J-4-93	Methylene Chloride	28.0
Tenax/Charcoal	5J-4-94	1,1,1-Trichloroethane	36.0
Cond #1	5J-4-95	Acetone	589000
		Methylene Chloride	58500
		1,1,1-Trichloroethane	195
		Toluene	43600
Cond #2	5J-4-96	Acetone	589000
		Methylene Chloride	68200
		1,1,1-Trichloroethane	204
		Toluene	44400
Cond #3	5J-4-97	Acetone	547000
		Methylene Chloride	64000
		2-Butanone	602
		1,1,1-Trichloroethane	207
		Toluene	41500
Cond #4	5J-4-98	Acetone	537000
		Methylene Chloride	59000
		1,1,1-Trichloroethane	91.2
		Toluene	36500
Cond Blank	5J-4-99	Acetone	855000
		Methylene Chloride	98200
		2-Butanone	838
		1,1,1-Trichloroethane	221
		Toluene	53700

[a]Sample broken on receipt.

Table 5-22. Aqueous Volatile Organics Summary

Run	Sample ID	Sample No.	Compound	Concentration (μg/L)
1	Process Water Pre-test	5J-1-25	2-Butanone	6.14
			1,1,1-Trichloroethane	6.1
			Dibromochloromethane	1.72
			Bromoform	18.6
	Process Water Post test	5J-1-60	Methylene Chloride	4.2
			2-Butanone	3.75
			1,1,1-Trichloroethane	6.3
			Toluene	1.18
			Dibromochloromethane	1.51
			Bromoform	9.99
	Caustic Pre-test	5J-1-20	Acetone	24.1
			Methylene Chloride	1.51
			2-Butanone	81.1
			1,1,1-Trichloroethane	1.2
	Caustic Post test	5J-1-54	Acetone	71.9
			Methylene Chloride	3.08
			2-Butanone	107
			1,1,1-Trichloroethane	3.92
	Scrubber Brine Pre-test	5J-1-13	Methylene Chloride	1.31
			2-Butanone	38.3
			1,1,1-Trichloroethane	2.92
	Scrubber Brine Post test	5J-1-48	Methylene Chloride	1.37
			2-Butanone	22.8
			1,1,1-Trichloroethane	3.05
	Scrubber Liquor Pre-test	5J-1-6	Methylene Chloride	1.37
			2-Butanone	11.5
			1,1,1-Trichloroethane	1.62
	Scrubber Liquor Post test	5J-1-42	Methylene Chloride	1.38
			1,1,1-Trichloroethane	1.34
2	Process Water Pre-test	5J-2-25	Methylene Chloride	1.53
			1,1,1-Trichloroethane	6.55
			Dibromochloromethane	1.46
			Bromoform	9.28
	Process Water Post test	5J-2-53	Acetone	5.88
			1,1,1-Trichloroethane	3.1
			Dibromochloromethane	1.59
			Bromoform	17.2

(continued)

Table 5-22 (continued)

Run	Sample ID	Sample No.	Compound	Concentration (µg/L)
	Caustic Pre-test	5J-2-19	Acetone	26.3
			Methylene Chloride	1.14
			2-Butanone	100
			1,1,1-Trichloroethane	3.98
	Caustic Post test	5J-2-47	Acetone	12.4
			Methylene Chloride	1.04
			2-Butanone	97.5
			1,1,1-Trichloroethane	0.29
	Scrubber Brine Pre-test	5J-2-13	2-Butanone	37.4
			1,1,1-Trichloroethane	0.77
	Scrubber Brine Post test	5J-2-41	Methylene Chloride	7.69
			2-Butanone	33.2
			1,1,1-Trichloroethane	5.05
	Scrubber Liquor Pre-test	5J-2-6	Methylene Chloride	1.44
			1,1,1-Trichloroethane	6.05
	Scrubber Liquor Post test	5J-2-34	Methylene Chloride	8.69
			1,1,1-Trichloroethane	2.65
			Toluene	1.39
3	Process Water Pre-test	5J-3-25	Methylene Chloride	1.93
			1,1,1-Trichloroethane	5.55
			Bromoform	6.57
	Process Water Post test	5J-3-54	Methylene Chloride	2.17
			1,1,1-Trichloroethane	5.32
			Bromoform	8.17
	Caustic Pre-test	5J-3-19	Acetone	1654
			Methylene Chloride	4.68
			2-Butanone	92.1
			1,1,1-Trichloroethane	4.19
			Toluene	2.12
	Caustic Post test	5J-3-47	2-Butanone	90.9
			1,1,1-Trichloroethane	2.69
			Toluene	1.13
	Scrubber Brine Pre-test	5J-3-13	Methylene Chloride	1.6
			2-Butanone	31.3
			1,1,1-Trichloroethane	2.97
	Scrubber Brine Post test	5J-3-40	Methylene Chloride	6.44

(continued)

Table 5-22 (continued)

Run	Sample ID	Sample No.	Compound	Concentration (μg/L)
	Scrubber Liquor Pre-test	5J-3-6	Methylene Chloride	6.9
			1,1,1-Trichloroethane	4.93
			Toluene	1.04
	Scrubber Liquor Post test	5J-3-35	2-Butanone	14.3
			1,1,1-Trichloroethane	5.51
4	Process Water Pre-test	5J-4-25	Methylene Chloride	2.83
			1,1,1-Trichloroethane	5.63
			Bromoform	4.17
	Process Water Post test	5J-4-53	Methylene Chloride	1.97
			1,1,1-Trichloroethane	3.74
	Caustic Pre-test	5J-4-19	Acetone	1071
			Methylene Chloride	10.9
			2-Butanone	81.4
			1,1,1-Trichloroethane	3.2
			Toluene	4.45
	Caustic Post test	5J-4-47	Acetone	17.1
			Methylene Chloride	1.16
			2-Butanone	83.4
			1,1,1-Trichloroethane	5.17
	Scrubber Brine Pre-test	5J-4-13	2-Butanone	11.7
			1,1,1-Trichloroethane	5.16
	Scrubber Brine Post test	5J-4-41	2-Butanone	57.2
			1,1,1-Trichloroethane	1.97
	Scrubber Liquor Pre-test	5J-4-6	Methylene Chloride	2.22
	Scrubber Liquor Post test	5J-4-34	Methylene Chloride	2.96
			2-Butanone	6.44
			1,1,1-Trichloroethane	4.29

Following is a sample calculation for Run 3 Pair #3 Tenax/Charcoal VOST tube for amount detected of toluene:

$$\frac{\text{(Area of component detected)(Amount of internal standard)}}{\text{(Area of internal standard)(Response Factor from 3-pt. calibration)}} =$$

$$\frac{(18393230)(250\text{ng})}{(645599)(1.788)} = 3983 \text{ ng}$$

$$\frac{\text{Amount detected (ng)}}{\text{Volume sampled (L)}} = \frac{3983 \text{ ng}}{20.837 \text{ L}} = 191 \text{ ng/L in stack gas}$$

5.3.3 Anion Determinations

The anions Cl^- and F^- were measured in the stack gas to determine the levels of HCl and HF in the emissions from the incinerator; the required samples were collected with an M5AT. Phosphate was measured on the M5AT filter. Details of the operating parameters for the M5AT are presented in Table 5-23 and indicate that the sampling for acids was valid. The anions measured in the incinerator-residue samples were Cl^-, F^-, and PO_4^{-3}.

Table 5-24 displays the results of the analyses of the M5AT for HCl, Cl_2, HF and PO_4^{-3}. By incorporating both H_2SO_4 and NaOH impingers, the M5AT differentiates between HCl and Cl_2 in the stack. No HCl or HF was found in the M5AT samples.

Field data sheets for the above sampling trains are provided in Appendix F. Complete tabulations of reduced data and calculations of concentrations for the trains are provided in Appendix D.

The process liquids and fuel oil were analyzed for chloride, fluoride and phosphate; Table 5-25 gives the results. The highest concentrations of fluoride and phosphate were found in the scrubber liquor and scrubber brine. The levels in the pretest samples were generally similar to, or somewhat higher than, those in the post-test samples.

5.3.4 Metals analysis

Samples intended for the determination of metals were collected from the stack emissions with an MMT. Table 5-26 indicates the operating parameters for this train. Particulate materials were also collected with the MMT, and the results of particle-concentration measurements are also detailed in the table.

TABLE 5-23. METHOD 5 ACID TRAIN CONDITIONS AND RESULTS

Parameter	Units	TR 1	TR 2	TR 3	TR 4
Date	--	3/10/92	3/11/92	3/15/92	3/16/92
Sample Time	minutes	120	120	120	120
Sample Volume	dscf	68.106	72.413	75.933	70.669
Stack Gas Flow Rate	dscfm	7865	7634	7540	7575
Stack Gas Temperature	°F	188	188	192	189
Stack Gas Moisture	%	32.1	32.4	37.3	35.6
Percent Isokinetic		91.3	100.2	106.2	96.8
HCl Catch	mg/dscm	<0.876	<0.868	<0.874	<0.939
HCl Emission Rate	lb/hr	NA*	NA	NA	NA
HF Catch	mg/dscm	<0.586	<0.580	<0.581	<0.625
HF Emission Rate	lb/hr	NA	NA	NA	NA
Part. Catch	mg	1.3	16.4	2.5	2.2
Part. Concentration					
@ 7% O_2	gr/dscf	0.000704	0.00834	0.00110	0.00107
	mg/dscm	1.61	19.1	2.52	2.45
@ 12% CO_2	gr/dscf	0.000928	0.0104	0.00135	0.00134
	mg/dscm	2.12	23.8	3.09	3.07
Part. Emission Rate	lb/hr	0.0198	0.228	0.0328	0.0311
Oxygen Concentration	%	15.1	15.1	14.5	14.7
CO_2 Concentration	%	3.8	4.0	4.5	4.3
Leak Checks:					
Pitot Pretest		pass	pass	pass	pass
Pitot Post-test		pass	pass	pass	pass
Train Pretest	cfm at	0.001	0.000	0.000	0.000
	in. Hg	15	15	15	15
Train Post-test	cfm at	0.004	0.000	0.000	0.000
	in. Hg	6.0	6.0	8.0	7.0

*NA - Not applicable, no meaningful result can be calculated.

TABLE 5-24. METHOD 5 ACID TRAIN RESULTS

Sample ID	Sample No.	Imp Vol, mL	Total µg HCl	Cl_2	HF	PO_4^{-3}
Blank Train						
Filter	4J-BB-146		NA[a]	NA	NA	205
Imp 1,2,3	4J-BB-148	100	ND[b]	NA	ND	NA
Imp 2,5	4J-BB-149	175	ND	ND	ND	NA
Imp 3	4J-BB-150	175	ND	NA	ND	NA
Imp 4	4J-BB-151	200	NA	NA	ND	NA
Imp 5	4J-BB-152	225	NA	NA	ND	NA
0.1N H_2SO_4 Blank	4J-BB-153	100	ND	NA	ND	NA
0.1N NaOH Blank	4J-BB-154	100	NA	ND	ND	NA
DI H_2O Blank	4J-BB-155	100	ND	NA	ND	NA
Filter Blank	4J-BB-157		NA	NA	NA	168
Run 1						
Filter	5J-1-64		NA	NA	NA	332
Imp 1	5J-1-66	500	ND	NA	ND	NA
Imp 2	5J-1-67	450	ND	NA	ND	NA
Imp 3	5J-1-68	175	ND	NA	ND	NA
Imp 4	5J-1-69	200	NA	ND	ND	NA
Imp 5	5J-1-70	200	NA	ND	ND	NA
0.1N H_2SO_4 Blank	5J-1-71	50	ND	NA	ND	NA
0.1N NaOH Blank	5J-1-72	50	NA	ND	ND	NA
DI H_2O Blank	5J-1-73	50	ND	NA	ND	NA
Filter Blank	5J-1-75		NA	NA	NA	202
Run 2						
Filter	5J-2-57		NA	NA	NA	594
Imp 1	5J-2-59	500	ND	NA	ND	NA
Imp 2	5J-2-60	475	ND	NA	ND	NA
Imp 3	5J-2-61	200	ND	NA	ND	NA
Imp 4	5J-2-62	200	NA	ND	ND	NA
Imp 5	5J-2-63	200	NA	ND	ND	NA
0.1N H_2SO_4 Blank	5J-2-64	50	ND	NA	ND	NA
0.1N NaOH Blank	5J-2-65	50	NA	ND	ND	NA
DI H_2O Blank	5J-2-66	50	ND	NA	ND	NA
Filter Blank	5J-2-68		NA	NA	NA	229

(continued)

TABLE 5-24 (continued)

Sample ID	Sample No.	Imp Vol, mL	Total µg HCl	Cl_2	HF	PO_{4-3}
Run 3						
Filter	5J-3-93		NA	NA	NA	662
Imp 1	5J-3-95	500	ND	NA	ND	NA
Imp 2	5J-3-96	500	ND	NA	ND	NA
Imp 3	5J-3-97	450	ND	NA	ND	NA
Imp 4	5J-3-98	200	NA	ND	ND	NA
Imp 5	5J-3-99	200	NA	ND	ND	NA
0.1N H_2SO_4 Blank	5J-3-100	50	ND	NA	ND	NA
0.1N NaOH Blank	5J-3-101	50	NA	ND	ND	NA
DI H_2O Blank	5J-3-102	50	ND	NA	ND	NA
Filter Blank	5J-3-104		NA	NA	NA	146
Run 4						
Filter	5J-4-57		NA	NA	NA	140
Imp 1	5J-4-59	500	ND	NA	ND	NA
Imp 2	5J-4-60	500	ND	NA	ND	NA
Imp 3	5J-4-61	226	ND	NA	ND	NA
Imp 4	5J-4-62	150	NA	ND	ND	NA
Imp 4	5J-4-63	100	NA	ND	ND	NA
0.1N H_2SO_4 Blank	5J-4-64	50	ND	NA	ND	NA
0.1N NaOH Blank	5J-4-65	50	NA	ND	NA	NA
DI H_2O Blank	5J-4-66	50	ND	NA	ND	NA
Filter Blank	5J-4-68		NA	NA	NA	126

[a]NA - Not analyzed.

[b]ND - Not Detected. Detection limit for Cl_2 - 4 µg/mL; for HF - 3 µg/mL; for PO_4^{-3} - 68 µg/mL in liquids (To estimate the limit for the entire sample, multiply by the volume). Detection limit for PO_4^{-3} on filters - 32 µg.

TABLE 5-25. ANION CONCENTRATIONS

Run No.	Sample ID	Sample No.	Concentration (mg/L) F^-	PO_4^{-3}	Cl^-
1	Process Water Pretest	5J-1	ND[a]	ND	216
	Process Water Post Test	5J-1	ND	ND	215
	Scrubber Liquor Pretest	5J-1	ND	700	350
	Scrubber Liquor Post Test	5J-1	25	730	400
	Scrubber Brine Pretest	5J-1	ND	7600	2700
	Scrubber Brine Post Test	5J-1	150	6600	1900
	Caustic Pretest	5J-1	ND	ND	1300
	Caustic Post Test	5J-1	ND	ND	1300
	Fuel Oil Pretest	5J-1	0.34	ND	0.19
	Fuel Oil Post Test	5J-1	0.31	ND	0.15
2	Process Water Pretest	5J-2	ND	ND	210
	Process Water Post Test	5J-2	ND	ND	200
	Scrubber Liquor Pretest	5J-2	22	680	340
	Scrubber Liquor Post Test	5J-2	21	660	350
	Scrubber Brine Pretest	5J-2	360	9300	3000
	Scrubber Brine Post Test	5J-2	120	5000	1800
	Caustic Pretest	5J-2	ND	ND	1400
	Caustic Post Test	5J-2	ND	ND	1300
	Fuel Oil Pretest	5J-2	0.51	ND	0.17
	Fuel Oil Post Test	5J-2	0.36	ND	0.17
3	Process Water Pretest	5J-3	ND	ND	180
	Process Water Post Test	5J-3	ND	ND	180
	Scrubber Liquor Pretest	5J-3	21	640	410
	Scrubber Liquor Post Test	5J-3	22	700	490
	Scrubber Brine Pretest	5J-3	250	7100	9800
	Scrubber Brine Post Test	5J-3	50	5400	1600
	Caustic Pretest	5J-3	ND	ND	1400
	Caustic Post Test	5J-3	ND	ND	1400
	Fuel Oil Pretest	5J-3	0.35	ND	0.21
	Fuel Oil Post Test	5J-3	0.38	ND	0.22

(continued)

TABLE 5-25 (continued)

Run No.	Sample ID	Sample No.	Concentration (mg/L) F^-	PO_4^{-3}	Cl^-
4	Process Water Pretest	5J-4	2.7	ND	170
	Process Water Post Test	5J-4	ND	ND	170
	Scrubber Pretest	5J-4	ND	660	390
	Scrubber Liquor Post Test	5J-4	ND	750	500
	Scrubber Brine Pretest	5J-4	210	9900	6600
	Scrubber Brine Post Test	5J-4	310	6500	3700
	Caustic Pretest	5J-4	ND	ND	1300
	Caustic Post Test	5J-4	ND	ND	1300
	Fuel Oil Pretest	5J-4	0.42	ND	0.21
	Fuel Oil Post Test	5J-4	0.35	ND	0.22

[a]Detection limits	F^-	PO_4^{-3}	Cl^-
Brine Samples	80	120	1600
Scrubber Liquor Samples	8.0	12	160
Process Water Samples	0.80	1.2	16
Caustic Samples	8.0	12	160
Fuel Oil Samples	0.080	0.12	1.6

TABLE 5-26. METHOD 5 MULTIPLE METALS TRAIN CONDITIONS AND RESULTS

Parameter	Units	TR 1	TR 2	TR 3	TR 4
Date	--	3/10/92	3/11/92	3/15/92	3/16/92
Sample Time	minutes	72	72	72	72
Sample Volume	dscf	52.667	60.488	55.060	56.469
Stack Gas Flow Rate	dscfm	7445	7321	7012	6779
Stack Gas Temperature	°F	188	188	190	191
Stack Gas Moisture	%	32.8	34.1	33.8	38.4
Percent Isokinetic		90.0	105.1	102.5	106.0
Part. Catch	mg	2.8	1.2	2.8	2.1
Part. Emission Rate	lb/hr	0.0522	0.0192	0.0459	0.0333
Particulate Concentration					
@ 7% O_2	gr/dscf	0.00196	0.00072	0.0018	0.00128
	mg/dscm	4.49	1.65	4.11	2.93
@ 12% CO_2	gr/dscf	0.00259	0.00092	0.00223	0.00160
	mg/dscm	5.93	2.10	5.10	3.66
Oxygen Concentration[a]	%	15.1	15.0	15.0	14.7
CO_2 Concentration[a]	%	3.8	4.0	4.1	4.3
Leak Checks:					
Pitot Pretest		pass	pass	pass	pass
Pitot Post-test		pass	pass	pass	pass
Train Pretest	cfm at	0.001	0.002	0.002	0.005
	in. Hg	15	15	15	15
Train Post-test	cfm at	0.000	0.000	0.000	0.000
	in. Hg	7.0	7.0	9.0	8.0

[a]Orsat values at stack.

The remaining results for the MMT are given in Table 5-27. These results show that eight of the metals were found in one or more of the samples. In some cases, these metals were also found in the blanks. The data are reported as front (particulate and filter components) and back (impingers). There are no regulatory limits for metal concentrations in these sample media; however, the concentrations of most metals were near or below the applicable method detection limits.

The results of the analyses of incinerator-process samples for metals are given in Table 5-28. Chromium and lead were both present at levels above the regulatory limits. Specifically, the pretest and post-test samples of scrubber brine from Test 4 contained high lead concentrations. Furthermore, pretest and post-test scrubber-brine results from all tests showed high chromium concentrations. But the levels were similar in both the pretest and post-test samples, indicating that the incineration did not contribute significant amounts of metals to the process samples.

Example Calculations are given below:

MMT Front Half:

The final volume for MMT front halves is 100 mL. If a sample gives an ICP result for Cu of 1.25 μg/mL, then total μg Cu = 1.25 μg/mL x 100 mL = 125 μg.

MMT Back Half:

Back-half ICP results were corrected for the fraction removed for mercury analysis. If the total original sample volume was 600 mL, then 100 mL was removed for mercury analysis, and the remaining 500 mL was reduced to a final volume of 100 mL during digestion. Hence, if the ICP result for Cu was 1.24 μg/mL, then total Cu = 1.24 μg/mL x 100 mL x 600/500 = 149 μg.

MMT Mercury:

Mercury results by cold vapor-AA are expressed as the weight of mercury found in the total original volume of the sample. Moreover, all mercury standards were made up to a 100-mL volume, and thus it was also convenient to use 100-mL sample volumes. Therefore, if a 100-mL aliquot that was removed from a 600-mL sample gave a result of 1.2 μg/mL, then total μg Hg = 1.2 μg/mL x 600 mL = 720 μg Hg.

Matrix spikes and spike duplicates:

Spike recoveries were calculated by

$$\% \text{ Recovery} = \frac{\text{Conc. spiked sample - conc. unspiked sample}}{\text{spike conc. level}} \times 100$$

TABLE 5-27. JACADS LIC Trial Burn Metal Train Results
All results are in total µg

Sample Description	Tl	As	Se	Cr	Cd	Pb	Ba	Be	Ag	Sn	Sb	P	Zn	Co	Ni	B	Mn	V	Cu	Hg
LIC Blank (BB)																				
Front	<1	<5	<5	2.05	<1	<5	<10	0.5	<2	<5	<5	178	9.75	<2	<3	405	1.38	<5	1.18	<0.12
Back	<1	<5	<5	1.42	<1	<5	<10	<0.5	<2	29.4	<5	34.9	5.41	<2	<3	<10	1.58	<5	<5	<0.12
Mercury																				<0.12
Front Field Blank	<1	<5	<5	2.20	<1	<5	<10	<0.5	<2	<5	<5	151	<5	<2	<3	376	0.88	<5	<1	<0.12
Back Field Blank	<1	<5	<5	<1	<1	<5	<10	<0.5	<2	<5	<5	<10	<5	<2	<3	<10	0.65	5.59	<5	<0.15
Mercury Field Blank																				<0.03

Continued

TABLE 5-27. Continued

Sample Description	Tl	As	Se	Cr	Cd	Pb	Be	Ba	Ag	Sn	Sb	P	Zn	Co	Ni	B	Mn	V	Cu	Hg
LIC Test Run #1																				
Front	<1*	<5	<5	3.35	<1	<5	<10	<0.5	<2	<5	<5	258	10.8	<2	<3	300	2.31	<5	1.09	<0.3
Back	<1	<5	<5	2.17	<1	<5	<10	<0.5	<2	35.9	<5	38.9	15.3	<2	<3	441	1070	<5	<5	<0.3
Mercury																				<0.12
Front Field Blank	<1	<5	<5	2.96	<1	<5	13.2	<0.5	<2	<5	<5	235	16.2	<2	<3	288	1.35	<5	1.10	<0.12
Back Field Blank	<1	<5	<5	<1	<1	<5	<10	<0.5	<2	10.9	<5	<10	<5	<2	<3	406	0.46	<5	<5	<0.15
Mercury Field Blank																				<0.03
LIC Test Run #2																				
Front	<1	<5	<5	3.46	<1	<5	14.2	<0.5	<2	<5	<5	263	23.1	<2	<3	18.9	4.12	<5	2.07	<0.12
Back	<1	<5	<5	1.86	<1	<5	<10	<0.5	<2	55.8	<5	47.3	42.4	<2	<3	401	78.4	<5	5.40	<0.34
Mercury																				<0.23
Front Field Blank	<1	<5	<5	2.90	<1	<5	12.7	<0.5	<2	<5	<5	185	9.09	<2	<3	<10	0.93	<5	<1	<0.12
Back Field Blank	<1	<5	<5	<1	<1	<5	<10	<0.5	<2	<5	<5	<10	<5	<2	<3	418	<0.5	<5	<5	<0.15
Mercury Field Blank																				<0.03

Continued

TABLE 5-27. Continued

Sample Description	Tl	As	Se	Cr	Cd	Pb	Ba	Be	Ag	Sn	Sb	P	Zn	Co	Ni	B	Mn	V	Cu	Hg
LIC Test Run #3																				
Front	<1	<5	<5	4.55	<1	<5	<10	<0.5	<2	<5	<5	221	42.4	<2	<3	<10	1.42	<5	1.12	<0.12
Back	<1	<5	<5	1.74	<1	<5	<10	<0.5	<2	54.0	<5	35.6	14.1	<2	<3	433	4.37	<5	<5	<0.32
Mercury																				<0.13
Front Field Blank	<1	<5	<5	3.82	<1	<5	<10	<0.5	<2	<5	<5	125	9.54	<2	<3	<10	1.00	<5	<1	<0.12
Back Field Blank	<1	<5	<5	<1	<1	<5	<10	<0.5	<2	7.30	<5	<10	<5	<2	<3	438	<0.5	<5	<5	<0.15
Mercury Field Blank																				<0.03
LIC Test Run #6																				
Front	<1	<5	<5	5.43	<1	<5	<10	<0.5	<2	<5	<5	530	11.5	<2	<3	438	5.95	<5	1.57	<0.12
Back	<1	<5	<5	1.39	<1	<5	<10	<0.5	<2	37.0	<5	45.1	49.6	<2	<3	431	507	<5	6.06	<0.34
Mercury																				<0.12
Front Field Blank	<1	<5	<5	3.92	<1	<5	<10	<0.5	<2	<5	<5	127	5.39	<2	<3	<10	0.92	<5	<1	<0.12
Back Field Blank	<1	<5	<5	<1	<1	<5	<10	<0.5	<2	16.7	<5	<10	<5	<2	<3	418	<0.5	<5	<5	<0.15
Mercury Field Blank																				<0.03

[a] All < values are indicative of limits of quantification.

TABLE 5-28. METAL ANALYSIS RESULTS
LIC PROCESS SAMPLES
All results in µg/mL except Mercury (µg/L)

Sample #	Sample ID	As	Se	Cr	Cd	Pb	Ni	Sn	Tl	Sb	Zn	Co	Ba	V	Be	Cu	Ag	Hg
	Test Run 1																	
5J-1-4	Scrubber Liquor Pretest	<0.1[a]	<0.1	0.74	<0.1	0.12	<0.1	<0.1	<0.2	<0.1	0.29	<0.1	<0.2	<0.1	<0.05	<0.1	<0.1	<0.5
5J-1-39	Scrubber Liquor Post Test	<0.1	<0.1	0.25	<0.1	<0.1	<0.1	<0.1	<0.2	<0.1	0.13	<0.1	<0.2	<0.1	<0.05	<0.1	<0.1	<0.5
5J-1-11	Scrubber Brine Pretest	<0.1	0.58	20.1	0.14	1.52	0.42	0.28	<0.2	0.20	5.84	<0.1	<0.2	<0.1	<0.05	0.70	<0.1	<0.5
5J-1-46	Scrubber Brine Post Test	0.11	0.13	8.25	<0.1	1.23	0.21	<0.1	<0.2	0.10	3.56	<0.1	<0.2	<0.1	<0.05	0.39	<0.1	<0.5
5J-1-23	Process Water Pretest	<0.1	<0.1	<0.1	<0.1	1.13	<0.1	<0.1	<0.2	<0.1	0.28	<0.1	<0.2	<0.1	<0.05	<0.1	<0.1	<0.5
5J-1-58	Process Water Post Test	<0.1	<0.1	<0.1	<0.1	<0.1	<0.1	<0.1	<0.2	<0.1	<0.1	<0.1	<0.2	<0.1	<0.05	<0.1	<0.1	<0.5
5J-1-17	Caustic Pretest	<0.1	<0.1	<0.1	<0.1	<0.1	<0.1	<0.1	<0.2	<0.1	0.56	<0.1	<0.2	<0.1	<0.05	0.11	<0.1	<0.5
5J-1-52	Caustic Post Test	<0.1	<0.1	<0.1	<0.1	0.13	<0.1	0.13	2.65	<0.1	0.89	<0.1	<0.2	<0.1	<0.05	<0.1	<0.1	<0.5
5J-1-28	Fuel Oil Pretest	<0.2	<0.2	<0.2	<0.2	<0.2	<0.2	<0.2	<0.2	<0.2	0.21	<0.2	<0.2	<0.2	<0.1	<0.2	<0.2	<0.5
5J-1-62	Fuel Oil Post Test	<0.2	<0.2	<0.2	<0.2	<0.2	<0.2	<0.2	<0.2	<0.2	<0.2	<0.2	<0.2	<0.2	<0.1	<0.2	<0.2	<0.5
	Test Run 2																	
5J-2-4	Scrubber Liquor Pretest	<0.1	<0.1	0.73	<0.1	0.10	<0.1	<0.1	<0.2	<0.1	0.44	<0.1	<0.2	<0.1	<0.05	<0.1	<0.1	<0.5
5J-2-32	Scrubber Liquor Post Test	<0.1	<0.1	0.78	<0.1	0.15	<0.1	<0.1	<0.2	<0.1	0.36	<0.1	<0.2	<0.1	<0.05	<0.1	<0.1	<0.5
5J-2-11	Scrubber Brine Pretest	0.15	0.30	17.4	<0.1	1.41	0.26	<0.1	<0.2	0.19	4.37	<0.1	<0.2	<0.1	<0.05	0.46	<0.1	<0.5
5J-2-39	Scrubber Brine Post Test	<0.1	<0.1	14.0	<0.1	0.58	0.10	<0.1	<0.2	0.12	1.80	<0.1	<0.2	<0.1	<0.05	0.24	<0.1	<0.5
5J-2-23	Process Water Pretest	<0.1	<0.1	<0.1	<0.1	<0.1	<0.1	<0.1	<0.2	<0.1	<0.1	<0.1	<0.2	<0.1	<0.05	<0.1	<0.1	<0.5
5J-2-51	Process Water Post Test	<0.1	<0.1	<0.1	<0.1	<0.1	<0.1	<0.1	<0.2	<0.1	<0.1	<0.1	<0.2	<0.1	<0.05	<0.1	<0.1	<0.5
5J-2-17	Caustic Pretest	<0.1	<0.1	<0.1	<0.1	0.29	<0.1	<0.1	0.69	<0.1	0.93	<0.1	<0.2	<0.1	<0.05	<0.1	<0.1	<0.5
5J-2-46	Caustic Post Test	<0.1	<0.1	<0.1	<0.1	<0.1	<0.1	<0.1	<0.2	<0.1	0.76	<0.1	<0.2	<0.1	<0.05	<0.1	<0.1	<0.5
5J-2-27	Fuel Oil Pretest	<0.2	<0.2	<0.2	<0.2	<0.2	<0.2	<0.2	<0.2	<0.2	<0.2	<0.2	<0.2	<0.2	<0.1	<0.2	<0.2	<0.5
5J-2-55	Fuel Oil Post Test	<0.2	<0.2	<0.2	<0.2	<0.2	<0.2	<0.2	<0.2	<0.2	<0.2	<0.2	<0.2	<0.2	<0.1	<0.2	<0.2	<0.5

Continued

TABLE 28. Continued

Sample #	Sample ID	As	Se	Cr	Cd	Pb	Ni	Sn	Tl	Sb	Zn	Co	Ba	V	Be	Cu	Ag	Hg
	Test Run 3																	
5J-3-4	Scrubber Liquor Pretest	<0.1	<0.1	1.79	<0.1	0.11	<0.1	<0.1	<0.2	<0.1	0.17	<0.1	<0.2	<0.1	<0.05	<0.1	<0.1	<0.5
5J-3-32	Scrubber Liquor Post Test	<0.1	<0.1	1.75	<0.1	0.12	<0.1	<0.1	<0.2	<0.1	0.21	<0.1	<0.2	<0.1	<0.05	<0.1	<0.1	<0.5
5J-3-11	Scrubber Brine Pretest	0.36	0.54	45.9	0.12	4.87	0.24	<0.1	<0.2	0.55	5.99	<0.1	<0.2	<0.1	<0.05	2.73	<0.1	<0.5
5J-3-38	Scrubber Brine Post Test	<0.1	<0.1	14.7	<0.1	0.70	<0.1	<0.1	<0.2	0.15	1.37	<0.1	<0.2	<0.1	<0.05	0.28	<0.1	<0.5
5J-3-23	Process Water Pretest	<0.1	<0.1	<0.1	<0.1	<0.1	<0.1	<0.1	<0.2	<0.1	<0.1	<0.1	<0.2	<0.1	<0.05	<0.1	<0.1	<0.5
5J-3-51	Process Water Post Test	<0.1	<0.1	<0.1	<0.1	<0.1	<0.1	<0.1	<0.2	<0.1	<0.1	<0.1	<0.2	<0.1	<0.05	<0.1	<0.1	<0.5
5J-3-17	Caustic Pretest	<0.1	<0.1	<0.1	<0.1	0.18	<0.1	<0.1	<0.2	<0.1	0.59	<0.1	<0.2	<0.1	<0.05	0.10	<0.1	<0.5
5J-3-45	Caustic Post Test	<0.1	<0.1	<0.1	<0.1	<0.1	<0.1	<0.1	<0.2	<0.1	0.66	<0.1	<0.2	<0.1	<0.05	0.11	<0.1	<0.5
5J-3-28	Fuel Oil Pretest	<0.2	<0.2	<0.2	<0.2	<0.2	<0.2	<0.2	<0.2	<0.2	<0.2	<0.2	<0.2	<0.2	<0.1	<0.2	<0.2	<0.5
5J-3-55	Fuel Oil Post Test	<0.2	<0.2	<0.2	<0.2	<0.2	<0.2	<0.2	<0.2	<0.2	<0.2	<0.2	<0.2	<0.2	<0.1	<0.2	<0.2	<0.5
	Test Run 4																	
5J-4-4	Scrubber Liquor Pretest	<0.1	<0.1	1.74	<0.1	0.54	<0.1	<0.1	<0.2	<0.1	0.60	<0.1	<0.2	<0.1	<0.05	<0.1	<0.1	<0.5
5J-4-32	Scrubber Liquor Post Test	<0.1	<0.1	2.09	<0.1	0.67	<0.1	<0.1	<0.2	<0.1	0.56	<0.1	<0.2	<0.1	<0.05	0.10	<0.1	<0.5
5J-4-11	Scrubber Brine Pretest	0.23	0.31	32.7	0.51	42.6	0.21	<0.1	<0.2	0.38	10.9	<0.1	<0.2	<0.1	<0.05	1.95	<0.1	<0.5
5J-4-39	Scrubber Brine Post Test	0.27	0.20	45.1	0.41	39.2	0.31	<0.1	<0.2	0.60	9.76	<0.1	<0.2	<0.1	<0.05	2.10	<0.1	<0.5
5J-4-23	Process Water Pretest	<0.1	<0.1	<0.1	<0.1	<0.1	<0.1	<0.1	<0.2	<0.1	<0.1	<0.1	<0.2	<0.1	<0.05	<0.1	<0.1	<0.5
5J-4-51	Process Water Post Test	<0.1	<0.1	<0.1	<0.1	0.32	<0.1	<0.1	<0.2	<0.1	<0.1	<0.1	<0.2	<0.1	<0.05	<0.1	<0.1	<0.5
5J-4-17	Caustic Pretest	<0.1	0.17	<0.1	<0.1	0.10	<0.1	0.20	0.23	<0.1	0.71	<0.1	<0.2	<0.1	<0.05	0.15	<0.1	<0.5
5J-4-45	Caustic Post Test	<0.1	<0.1	1.06	<0.1	0.16	<0.1	<0.1	<0.2	<0.1	0.67	<0.1	<0.2	<0.1	<0.05	0.12	<0.1	<0.5
5J-4-27	Fuel Oil Pretest	<0.2	<0.2	<0.2	<0.2	<0.2	<0.2	<0.2	<0.2	<0.2	<0.2	<0.2	<0.2	<0.2	<0.1	<0.2	<0.2	<0.5
5J-4-55	Fuel Oil Post Test	<0.2	<0.2	<0.2	<0.2	<0.2	<0.2	<0.2	<0.2	<0.2	<0.2	<0.2	<0.2	<0.2	<0.1	<0.2	<0.2	<0.5

[a]All < values are indicative of limits of quantification.

Process Samples:

Element concentrations in process samples were determined by linear-regression analysis, which was normally performed by the ICP and printed in report form. But mercury linear-regression analyses were hand-calculated and were documented in SRI notebooks.

5.3.5 pH Analysis

The pH levels of the process samples were measured with a pH electrode after the samples were delivered to the SRI laboratory. The pH levels of all aqueous samples are given in Table 5-29. The caustic solution contained about 18% NaOH, and the pH levels in the caustic samples were, therefore, always at the upper limit (~13.5) of the meter and are not reported in the table.

5.3.6 Particulate Measurements

Measurements of particle concentrations were made on samples from both the MMT and the M5AT. The particulate emission rates as calculated from the M5AT results for the four burns were, respectively, 0.0198, 0.228, 0.0328, and 0.0311 lb/hr. The particulate emission rates as calculated from the M5MMT results for the four burns were, respectively, 0.0522, 0.0192, 0.0459, and 0.0333 lb/hr. The particulate concentrations adjusted to 7% oxygen in the flue gas were 0.000704, 0.00834, 0.00110, and 0.00107 gr/dscf from the acid-train results and 0.00196, 0.00072, 0.00180, and 0.00128 gr/dscf from the MMT results. These values were all well below the allowable limit of 0.08 gr/dscf.

5.3.7 Particle Size Distributions

Only one particle-size distribution measurement was made. The weight gains in each stage of the impactor were checked after the first of the four test runs and, because of very low particulate concentrations, were found to be too low to be reliably measured. This meant that reliable weights for the several size fractions could be obtained only by continuing one sample through all four test runs. Consequently, the collection substrates were reloaded into the impactor, and a single sample was accumulated through all four test runs. Figure 5-5 shows the size distributions in a differential mass distribution format (dM/dLogD vs. Dia.). This format shows the concentration at each particle size versus size, with the area under the curve between two sizes equalling the total concentration over the size interval. Figure 5-6 shows the average distribution on a cumulative-percentage-by-mass-less-than-size basis. The overall mass median diameter of the particulate matter was approximately 0.6 μm. However, the distribution was distinctly bimodal, with about 80% of the particulate matter in a mode centered at approximately 0.5 μm and the remaining 20% in a mode centered at about 5 micrometers. Detailed results for the run can be found in Appendix D.

TABLE 5-29. SAMPLE pH

Run No.	Sample ID	Sample No.	pH
1	Scrubber Liquor Pretest	5J-1-5	9.3
	Scrubber Liquor Post Test	5J-1-40	9.4
	Scrubber Brine Pretest	5J-1-30	9.7
	Scrubber Brine Post Test	5J-1-47	12.78
	Process Water Pretest	5J-1-24	8.4
	Process Water Post Test	5J-1-39	2.4
2	Scrubber Liquor Pretest	5J-2-4	9.3
	Scrubber Liquor Post Test	5J-2-32	9.4
	Scrubber Brine Pretest	5J-2-11	11.2
	Scrubber Brine Post Test	5J-2-39	12.8
	Process Water Pretest	5J-2-23	8.6
	Process Water Post Test	5J-2-52	7.9
3	Scrubber Liquor Pretest	5J-3-32	9.4
	Scrubber Liquor Post Test	5J-3-61	9.5
	Scrubber Brine Pretest	5J-3-12	10.6
	Scrubber Brine Post Test	5J-3-39	10.6
	Process Water Pretest	5J-3-23	7.7
	Process Water Post Test	5J-3-91	7.7
4	Scrubber Liquor Pretest	5J-4-6	9.3
	Scrubber Liquor Post Test	5J-4-33	9.3
	Scrubber Brine Pretest	5J-4-12	10.2
	Scrubber Brine Post Test	5J-4-83	9.1
	Process Water Pretest	5J-4-24	8.4
	Process Water Post Test	5J-4-51	7.7

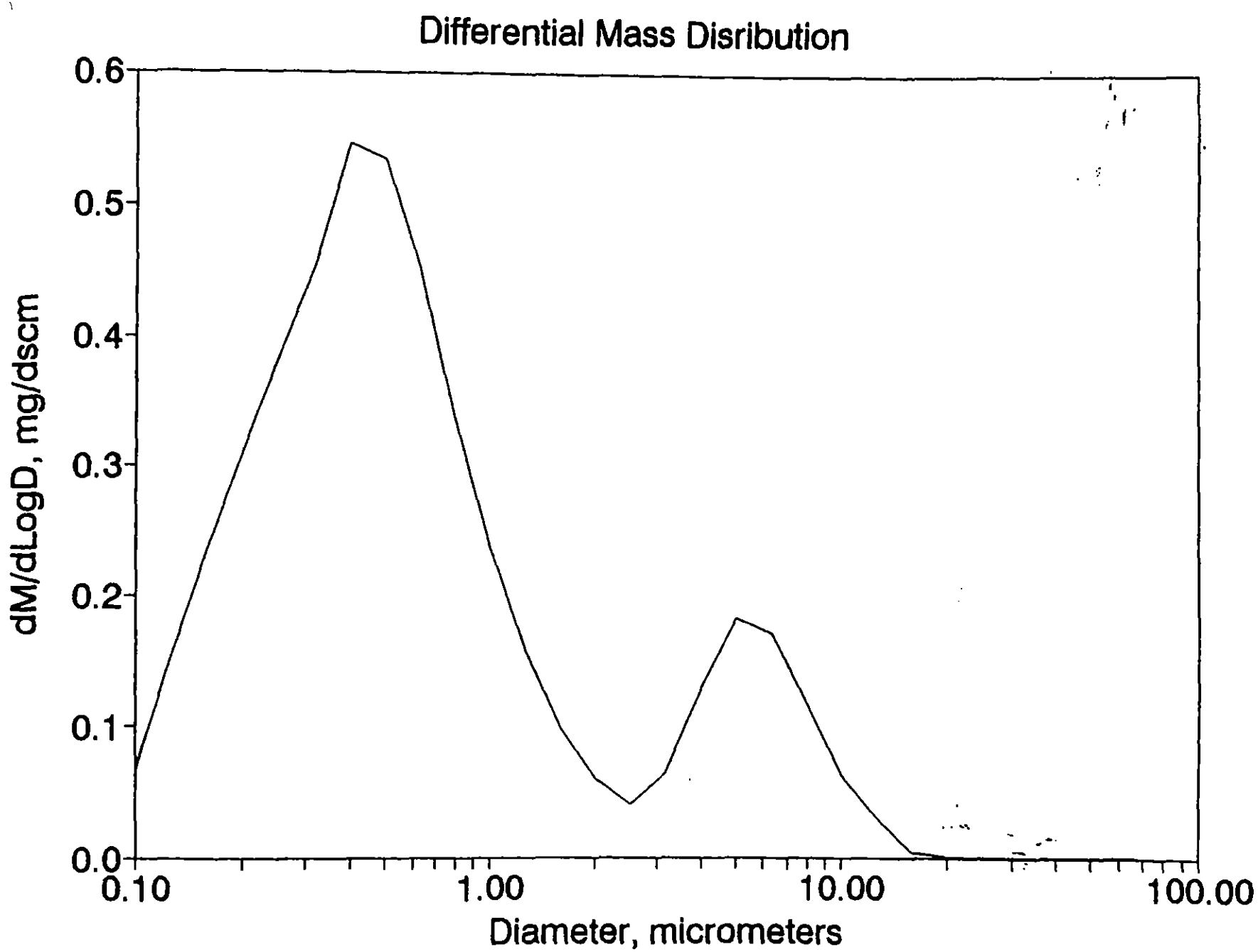

Figure 5-5. Differential mass size distribution for LIC VX RCRA Test Runs 1 through 4

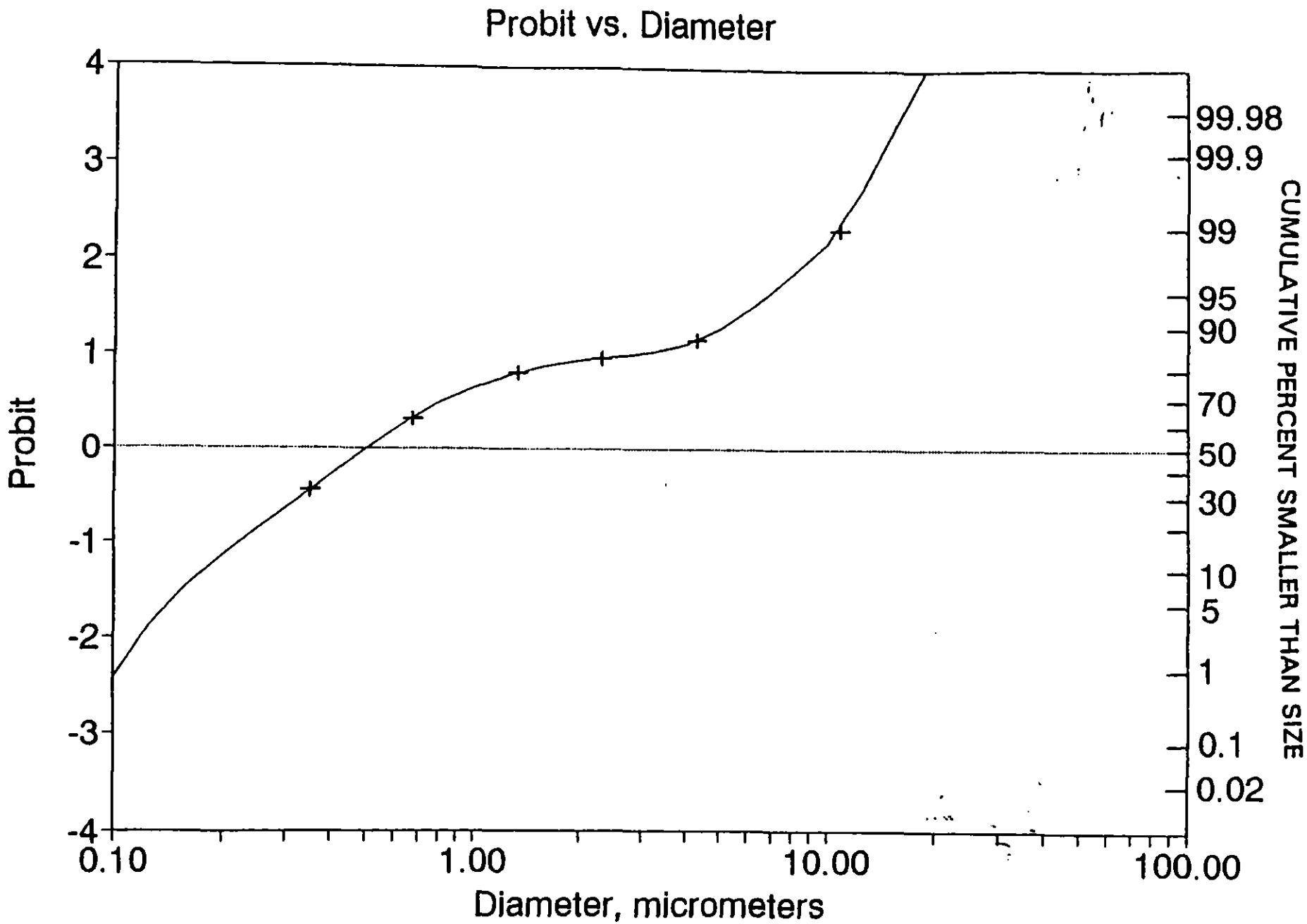

Figure 5-6. Particle size distribution on cumulative percent by mass smaller then size for LIC VX RCRA Trial Burns 1-4

Formulas and nomenclature for particulate concentrations and emission rates are given in Appendix D.

5.4 Chemical Agent - POHC

5.4.1 Results

VX was designated as the POHC. The feed rates for VX were nominally 700 lb/hr for the four runs. The Limit of Quantitation (LOQ) or was used as the alarm set point for the stack ACAMS. That is, an alarm would have been generated if agent had been detected in the stack gas. The LOQ varied slightly over time and was verified daily for each ACAMS by challenges with agent. The LOQ was 0.000042, 0.000042, 0.000495, and 0.0000495 mg/m^3, respectively, for the four trial burns. If agent had been detected in the stack, than based on the LOQ, emission rate would be calculated by the equation:

Emission rate (lb/hr) = (Concentration, mg/m^3) X (1 g/1000 mg) X (0.437 grains/cf)/(g/m^3) X (1 lb/7000 grains) X (Stack gas flow rate, ft^3/min) X (60 min/hr)

= 0.00000375 X (concentration, mg/m^3) X (Stack gas flow rate, ft^3/min)

No VX was detected in the stack. The flow rates used in the above calculations were those measured during the sampling runs. Similar flow rates were obtained in the other M5 type sampling runs.

5.4.2 Destruction and Removal Efficiency (DRE)

The DRE for VX can be calculated from the equation:

%DRE = 100 X (Feed Rate - Emission Rate)/(Feed Rate)

where the Feed Rate is the input rate of the analyte and the Emission Rate is the mass rate at which residual analyte is discharged with the stack gases. The emission rate was calculated by using the limit of quantitation for each daily ACAMS challenge.

The DREs are therefore ≥ 99.9999997%.

The DREs were all substantially better than the RCRA requirement of 99.99%.

All samples that were removed from the secure area of the incinerator facility had to be certified as being free of agent. Accordingly, the JACADS laboratory analyzed all process liquids to certify them as being free of agent before samples were transported.

6. QUALITY ASSURANCE AND QUALITY CONTROL

6.1 Background

Obtaining defensible results in a sampling and analysis program of the type carried out here requires that a thorough quality assurance/quality control (QA/QC) program be followed. Such a QA/QC program was followed in all laboratory functions that pertained to the chemical analyses that were performed in this program. Typical QA/QC devices and strategies are instrument and sampling-system calibrations, initial and continuing instrument-calibration verifications, sample preservation and identification, replicate samples and analyses, analysis of blank samples, matrix spikes, and surrogates (where appropriate), and maintaining complete chain-of-custody documentation for all samples. Details regarding the QA/QC programs implemented by each participant can be found in Appendix G (SRI Analytical Test Plan). Results of the QA/QC activities are provided in several other appendices and are summarized below.

As a routine QA/QC procedure, the laboratory analyzed both blank and spiked samples. The blank samples included method blanks (laboratory reagents), field blanks, and trip blanks. Blanks were prepared according to the appropriate methods and procedures. An extraction blank was prepared for each day of extractions. A blank was analyzed each day after the daily calibration check and before the analysis of samples for volatile organics. The spiked samples consisted of matrix spikes (MSs), matrix spike duplicates (MSDs), and spikes according to EPA-certified methods appropriate for the specific analytes that were determined and quantified in this work. The blank samples were used to detect any contamination that may have been introduced in the field or the laboratory and to establish background values that could be used to adjust or correct routine analytical results.

Matrix-spiked and duplicate matrix-spiked samples were also prepared by the applicable methods. Each process sample matrix (water, caustic, liquor brine) had associated with it an MS and an MSD that was prepared from one of the sets of samples. The MSs were used to check the performances and the recovery efficiencies of the various analytical methods used in this work. The post-test process-residue samples from Run 2 were used for preparing most process-sample MSs and MSDs. The MS and MSD analyses were performed in connection with the determinations of volatile organics, semivolatile organics, PCBs, PCDD/F, and metals. Also, internal standards and surrogate standards were used in all organics analyses. Moreover, the reagents used to prepare the M5AT were spiked with chloride at three levels to measure recovery, and the MM5s were spiked with one dioxin and two other chlorinated compounds prior to sampling to monitor train retention. In addition, blank MM5s, M5ATs, and MMTs that were open to ambient air were assembled and then disassembled. After rinsing these trains and collecting the rinses, all extracts and components (filter, sorbent, etc.) were sent to the laboratory for analysis. The resulting information was used to identify contamination associated with the recovery operation. The blank data were reported with the sample sheets; spikes and duplicates were as indicated below. The appendices covering each type of sample relate which blanks and standards were analyzed with each sample.

The precision of the analyses was measured by preparing and analyzing several kinds of spikes and duplicates for all sample types. The surrogates and analytes used for spiking were chosen from among those that were suggested in the methods in SW846. For each method and matrix, the difference between the two duplicate analysis (MS and MSD) results was used to estimate the precision of the analysis, and the average spike recovery was used to estimate the bias of the analysis. The surrogate spikes, which were authentic standards that were added to every sample prior to sample processing and analysis, were used to provide QC on every sample by constantly monitoring for unusual matrix effects and gross sample-processing errors. The surrogate standards were compounds that were not likely to be found in the matrix.

VOA and VOST samples were shipped to SRI promptly enough that the analyses of the samples could be completed within 2 weeks of sample collection. Other samples were shipped as rapidly as DOT regulations allowed and were analyzed promptly. Samples that required refrigeration were shipped in ice chests and packed with blue ice to maintain a temperature of 4 °C.

Chain-of-custody (COC) was maintained for the samples according to the QA Project Plan included in the Trial Burn Test Plan (Appendix G). These procedures required that samples be recorded on sample-custody tracking sheets and that these sheets be transferred, signed, and dated when samples were transferred from one individual to another. The COC documentation is contained in Appendix A. The procedures also required that the custodian maintain possession of the samples or that they be stored under secure conditions.

6.2 Semivolatile Organic Analysis

The stack-gas QA/QC samples included a train blank that consisted of an entire MM5; field blanks that consisted of a filter, an XAD-2 sorbent trap, and all reagents required for the train assembly; an XAD-2 trip blank; and a laboratory blank for each matrix and for each day that samples were prepared.

The XAD-2 sorbent was treated with methylene chloride according to SW846 Method 0010. That is, a 40-g sample was treated (for the extraction of impurities and contaminants) with CH_2Cl_2, and the extract was analyzed by GC/MS to verify that the sorbent was contaminant-free prior to preparing the sorbent cartridges.

Before being shipped to the field, the XAD-2 sorbent traps were spiked with 104 μg of d_3-2,4-dichlorophenol, 200 μg of d_3-1,2,4-trichlorobenzene, and 2 ng of $^{37}Cl_4$-2,3,7,8-tetrachlorodibenzo-p-dioxin. These spikes were used to indicate the recovery of chlorinated acids, neutrals, and dioxins from the sample trains.

Samples were prepared as described in Section 4. The MM5 trains were spiked with three acid surrogate compounds and three neutral surrogate compounds for the semivolatile organics and with 14 labeled PCDD/F isotope-dilution standards prior to sample extraction. After the extraction, the samples were split such that 1/10 was taken for semivolatile organics analysis and 9/10 for PCDD/F analysis. Semivolatile internal standards were added immediately prior to analysis. All compounds and spikes were quantified against the internal standards.

The PCDD/F analysis used several cleanup steps, and labeled standards were used to measure recoveries. An additional aliquot of $^{37}Cl_4$-2,3,7,8-TCDD as a cleanup-recovery standard was added to the dioxin fraction after extraction but prior to PCDD/F cleanup. Note, however, that fractions containing XAD-2 resin-tube extracts were not spiked with cleanup standard because the tubes were spiked with 2 ng of this compound before being shipped to the field. Immediately before the analysis step, the labeled recovery standards were added. Thus, the quantification of PCDD/F was based on the standards spiked prior to extraction.

The recoveries of $^{37}Cl_4$-2,3,7,8-TCDD (i.e., the field spike-recovery standard or cleanup standard) for MM5 samples are given in Table 5-6. Generally, good recoveries were obtained for this compound, which had been spiked onto the XAD-2 resin in the MM5 tubes. The recoveries ranged from 65% to 107%, with only two samples falling outside of this range. The recovery of this compound from the blank train was 20%. The recovery from Test Run 4 was 1%; however, the standard may have inadvertently not been spiked onto the resin from Test Run 4 because the recoveries of isotopically labeled dioxin and furan surrogates spiked onto the sample prior to extraction were good. Also, the recoveries of the semivolatile field-spike compounds were good. The recovery of $^{37}Cl_4$-2,3,7,8-TCDD based as a cleanup standard was low for Test Run 3 filter and front wash. The recovery of tetra through penta-isotopically labeled surrogates spiked into the sample prior to extraction were also low which indicates loss of the compounds in the cleanup step.

The recoveries of $^{37}Cl_4$-2,3,7,8-TCDD spikes that were used as cleanup recovery standards for process samples (water, caustic, scrubber liquor, brine, and fuel oil) were generally good except for several samples in which the recoveries were essentially zero. These samples included four caustic samples, five fuel-oil samples, and one SRI lab blank. The recoveries of the isotopically labeled surrogates were generally good for each of these samples; therefore, the cleanup standard may not have been added prior to the sample cleanup process. Each of the suspect results is noted on the respective data sheets for each sample in Appendix H.

In general, the recoveries of the isotopically labeled surrogate compounds that were spiked into each sample prior to extraction were good. However, even when values fell out of the accepted range (40-120%), the calculated concentrations of target analytes were correct because the concentrations of target analytes were based upon the amount of their isotopically labeled surrogates present in the sample.

The results for the matrix spike (MS) and matrix spike duplicate (MSD) for each sample type are given in Appendix H and are listed in the summary tables in Section 5. The recovery of each component was good, and the relative difference between the MS and MSD for each compound was less than 20%, which was considered good.

The daily continuing calibration for target PCDD/F analytes generally met the acceptance criteria, however, when some compound values were slightly outside of the acceptance range, no PCDD/Fs of that type were detected.

The recoveries for the MM5 semivolatile field spikes are in volume VIIB, Appendix J. The recovery of the dichlorophenol ranged from 50% to 113%. This was considered to be an acceptable recovery level. The recovery of

trichlorobenzene ranged from 55% to 80%, with one sample (Test Run 2) yielding a value outside of this range (27%).

Recoveries of the spikes used to measure extraction efficiencies for the MM5 semivolatile compounds are indicated on the data sheets that are included with the analyses in Volume VIIB, Appendix J. The recoveries for the sample trains ranged from a low of 26.3% for the somewhat volatile phenol-d_5 to a high of 174% for less volatile terphenyl-d_{14} . The extraction solvent, toluene, eluted from GC column over a long enough period of time to interfere with the quantitation of fluorophenol, and no results for fluorophenol are reported for the MM5 samples. This same problem sometimes occurred with phenol-d_5, which could explain the low recoveries obtained for this compound.

The QA/QC samples for the scrubber liquor, brine, caustic, process-water and fuel-oil samples included laboratory blanks (one for each day of extractions or each matrix), surrogate spikes (each sample), MSs (one for each matrix), and MSDs (one for each matrix). Surrogates were not spiked in fuel-oil samples because of the large dilution required of the samples.

Several samples yielded low recoveries of one or more surrogates. The 2-fluorophenol and phenol-d_5 gave poor results in several cases. The acid surrogate recoveries for the caustic samples were low because of problems in making the sample acidic.

MSs and MSDs for semivolatile organics are also presented in Volume VIIB, Appendix J. Most recoveries were within acceptable limits. But 4-nitrophenol was not detected in the brine samples and was recovered very poorly from several other samples. This compound must be flagged as either not detectable or questionable in these samples. Moreover, the acid spikes were not recovered from the caustic samples. This was due to the difficulty in making the caustic sample acidic. A measure of the precision of the analyses is given by the relative difference for the MS and MSD. In most cases, the relative difference was less than 20%, which is excellent. The scrubber liquor and caustic samples were less precise. The caustic gave poor results, again due to the difficulty in making the sample acidic.

6.3 Volatile Organic Analysis

The QC samples for the volatiles analyses included blanks (each 12 hour shift), surrogates (each sample), and MS/MSDs (each matrix except VOST). The VOST tubes were conditioned for 16 hr at 180 °C under a flow of pre-purified nitrogen. Two sets of tubes from each conditioned batch were analyzed by GC/MS to confirm lack of contamination.

In Runs 3 and 4, the VOST tubes showed unusually high levels of acetone, methylene chloride, and toluene, which were not present in field or lab blanks. These three compounds were also found in extremely high levels in the condensates and condensate blank from Runs 3 and 4. This phenomenon appears to have been due to field contamination, although the compounds in question were not found in the VOST field blank. Perhaps the VOST field blank was not exposed to the same contaminated environment as the samples from Runs 3 and 4. All compounds found in the condensates, including extremely high levels of acetone, were also present in the condensate blanks.

The samples were spiked with surrogates 1,2-dichloroethane-d_4, toluene-d_8, and 4-bromofluorobenzene (BFB). The target range for VOST recoveries was 50-150%. The actual recoveries for aqueous process samples and condensates were as follows: 1,2-dichloroethane-d4, 76-114%; toluene-d8, 88-110%; and BFB, 86-115%. The surrogate recoveries for each sample are given in the data sheets in Appendix I. Several VOST tubes produced a low recovery of BFB, but this surrogate has a high boiling point and is unsuitable as a VOST spiking compound. VOST audit results are given in Table 6-1.

Table 6-1. VOST Audit Results

Compound	Sample Concentration (ng/L)[a]			
	1	2	4	Average
Chloromethane	242	267	429	313
1,1-Dichloroethane	709	784	823	772
Acetone[b]	46.7	54.2	77.0	---
Toluene	561	683	524	589
Chlorobenzene	776	890	732	799

[a]Sample 3 not used due to loss of internal standard.
[b]Significant levels of compound in the blank, no average reported.

MS and MSD results for VOA aqueous process samples are presented in Tables 6-2 through 6-5. All VOA recoveries were within target limits. The precision as measured by the relative difference of the matrix spike, and duplicate analyses agreed to within 20% in all cases.

6.4 Metals Analysis

As a QC protocol for the process samples, the laboratory analyzed blank, duplicate and spiked samples of each matrix. Because the DFS and LIC trial-burn samples were analyzed concurrently, matrix spikes for each matrix were taken from either the DFS or LIC burn and used for both reports. To determine matrix effects on the metal analyses, the samples were spiked with the 17 metals that were determined. Target limits for metal recoveries were 70-130%. Average recoveries for fuel oil, scrubber liquor, scrubber brine, and caustic QC samples were within acceptable limits for most of the metals spiked.

Results from the spiking of metals into the process samples are given in Tables 6-6 through 6-12.

Recoveries for all spiked metals, with the exception of silver in the process-water QC samples, were within 90-120%, with the highest relative difference being 12.5%.

The spiked fuel-oil samples gave high recoveries and good reproducibilities for all metals except barium, antimony, lead, and selenium. The organic matrix of the fuel oil may have caused the recovery of these metals to be variable. The relative differences were less than 5% for all metals except silver and lead.

TABLE 6-2. MATRIX SPIKE/MATRIX SPIKE DUPLICATE RECOVERY
(VOA Analysis)

Sample ID: 5J-3-26
5J-3-26MS LIC Process Water Pretest
5J-3-26MSD

Compound	Spike added, (µg/L)	Sample concn., (µg/L)	Matrix Spike Concn., (µg/L)	Matrix Spike Recovery, %	Matrix Spike Duplicate Concn., (µg/L)	Matrix Spike Duplicate Recovery, %	RPD	% Recovery range SW-846
1,2-Dichloroethene-d_4[a]	50	NA[a]	NA	99.2	NA	105	5.52	76-114
Toluene-d_8[a]	50	NA	NA	91.4	NA	91.4	0.44	88-110
4-Bromofluorobenzene[a]	50	NA	NA	95.8	NA	97.4	1.64	86-115
1,1-Dichloroethene	50	ND[c]	40.1	80.2	40.7	81.4	1.47	50.5-150
Benzene	50	ND	41.3	82.6	44.3	88.6	6.77	64-136
Trichloroethene	50	ND	45.0	90.0	44.6	89.2	0.89	66.5-134
Toluene	50	ND	44.4	88.8	44.9	89.8	1.11	74.5-126
Chlorobenzene	50	ND	40.7	81.4	40.4	80.8	0.74	66-134

[a]Surrogate compound.
[b]NA = Not applicable.
[c]ND = Not detected (detection limit = 1 µg/L).

TABLE 6-3. MATRIX SPIKE/MATRIX SPIKE DUPLICATE RECOVERY
(VOA Analysis)

Sample ID: 5J-3-20
5J-3-20MS LIC Caustic Pretest
5J-3-20MSD

Compound	Spike added, (µg/L)	Sample concn., (µg/L)	Matrix Spike Concn., (µg/L)	Matrix Spike Recovery, %	Matrix Spike Duplicate Concn., (µg/L)	Matrix Spike Duplicate Recovery, %	RPD	% Recovery range SW-846
1,2-Dichloroethene-d_4[a]	50	NA[b]	NA	113	NA	117	3.42	76-114
Toluene-d_8[a]	50	NA	NA	94.4	NA	100	5.60	88-110
4-Bromofluorobenzene[a]	50	NA	NA	99.0	NA	103	3.88	86-115
1,1-Dichloroethene	50	ND[c]	43.4	86.8	50.6	101	14.1	50.5-150
Benzene	50	ND	48.5	97.0	49.7	99.4	2.41	64-136
Trichloroethene	50	ND	46.0	92.0	48.0	97.9	6.03	66.5-134
Toluene	50	ND	44.8	89.4	48.7	97.5	8.31	74.5-126
Chlorobenzene	50	ND	40.7	81.4	44.6	89.2	8.74	66-134

[a]Surrogate compound.
[b]NA - Not applicable.
[c]ND - Not detected (detection limit - 1 µg/L).

TABLE 6-4. MATRIX SPIKE/MATRIX SPIKE DUPLICATE RECOVERY
(VOA Analysis)

Sample ID: 5J-3-41
5J-3-41MS LIC Scrubber Brine Post Test
5J-3-41MSD

Compound	Spike added, (µg/L)	Sample concn., (µg/L)	Matrix Spike Concn., (µg/L)	Matrix Spike Recovery, %	Matrix Spike Duplicate Concn., (µg/L)	Matrix Spike Duplicate Recovery, %	RPD	% Recovery range SW-846
1,2-Dichloroethene-d_4[a]	50	NA[b]	NA	NA	106	111	4.50	76-114
Toluene-d_8[a]	50	NA	NA	NA	90.6	90.2	0.44	88-110
4-Bromofluorobenzene[a]	50	NA	NA	NA	96.2	93.0	3.33	86-115
1,1-Dichloroethene	50	ND[c]	38.5	77.0	38.8	77.6	0.77	50.5-150
Benzene	50	ND	41.8	83.6	43.9	87.8	4.78	64-136
Trichloroethene	50	ND	41.4	82.8	43.4	86.8	4.61	66.5-134
Toluene	50	ND	40.9	81.8	42.2	84.4	3.08	74.5-126
Chlorobenzene	50	ND	37.5	75.0	38.7	77.4	3.10	66-134

[a]Surrogate compound.
[b]NA - Not applicable.
[c]ND - Not detected (detection limit = 1 µg/L).

TABLE 6-5. MATRIX SPIKE/MATRIX SPIKE DUPLICATE RECOVERY
(VOA Analysis)

Sample ID: 5J-3-34
5J-3-34MS LIC Scrubber Liquor Post Test
5J-3-34MSD

Compound	Spike added, (µg/L)	Sample concn., (µg/L)	Matrix Spike Concn., (µg/L)	Matrix Spike Recovery, %	Matrix Spike Duplicate Concn., (µg/L)	Matrix Spike Duplicate Recovery, %	RPD	% Recovery range SW-846
1,2-Dichloroethene-d_4[a]	50	NA[b]	NA	101	NA	103	1.94	76-114
Toluene-d_8[a]	50	NA	NA	89.6	NA	91.4	1.97	88-110
4-Bromofluorobenzene[a]	50	NA	NA	94.0	NA	95.2	1.26	86-115
1,1-Dichloroethene	50	ND[c]	40.3	80.6	41.5	83.0	2.89	50.5-150
Benzene	50	ND	44.6	89.2	43.6	87.0	2.47	64-136
Trichloroethene	50	ND	42.5	85.0	41.7	83.4	1.88	66.5-134
Toluene	50	ND	42.4	84.8	43.4	86.8	2.30	74.5-126
Chlorobenzene	50	ND	40.9	81.8	40.6	81.2	0.73	66-134

[a]Surrogate compound.
[b]NA - Not applicable.
[c]ND - Not detected (detection limit - 1 µg/L).

TABLE 6-6. JACADS Process Samples QC Table
Fuel Oil
Matrix Spike/Matrix Spike Duplicate for LIC

Element	Sample conc., µg/mL	Sample duplicate conc., µg/mL	Spike added µg/mL	Matrix Spike Conc., µg/mL	Matrix Spike % Recovery	Matrix Spike Duplicate Conc., µg/mL	Matrix Spike Duplicate % Recovery	Relative % Difference
Arsenic	<0.2	<0.2	2	2.16	109	2.09	104	4.7
Selenium	<0.2	<0.2	0.5	0.88	176	0.87	174	1.1
Chromium	<0.2	<0.2	2	1.95	98	1.86	93	5.2
Cadmium	<0.2	<0.2	0.5	0.44	88	0.43	86	2.3
Lead	<0.2	<0.2	2	0.35	18	0.20	10	57.1
Nickel	<0.2	<0.2	1	0.95	95	0.92	92	3.2
Tin	<0.2	<0.2	1	0.95	95	0.95	95	0
Thallium	<0.2	<0.2	20	17.5	88	17.2	86	2.3
Antimony	<0.2	<0.2	1	0.63	63	0.61	61	3.2
Zinc	<0.2	<0.2	1	0.86	86	0.88	88	2.3
Cobalt	<0.2	<0.2	1	0.92	92	0.95	95	3.2
Barium	<0.2	<0.2	20	<0.2	--[a]	<0.2	--[a]	
Vanadium	<0.2	<0.2	1	0.99	99	0.99	99	0
Beryllium	<0.2	<0.2	1	1.05	105	1.06	106	0.95
Copper	<0.2	<0.2	1	0.96	96	0.96	96	0
Silver	<0.2	<0.2	2	1.45	72	1.54	77	6.7
Mercury	<0.0003	[b]	0.003	0.00282	94	0.00285	95	1.1

[a]Matrix spikes for barium were not recovered.
[b]No duplicate analysis was performed for mercury.

TABLE 6-7. JACADS Process Samples QC Table
Caustic
Matrix Spike/Matrix Spike Duplicate for LIC

Element	Digestion blank, conc., µg/mL	Sample conc., µg/mL	Sample Duplicate Conc., µg/mL	Spike added, µg/mL	Matrix spike Conc., µg/mL	Matrix spike % Recovery	Matrix spike duplicate Conc., µg/mL	Matrix spike duplicate % Recovery	Relative % Difference
Arsenic	<0.1	<0.1	<0.1	4	3.65	91	5.06	127	33.0
Selenium	<0.1	<0.1	<0.1	1	0.95	95	1.22	122	24.9
Chromium	<0.1	1.06	<0.1	4	2.93	47	4.50	86	58.6
Cadmium	<0.1	<0.1	<0.1	1	0.40	40	1.11	111	94.0
Lead	<0.1	0.16	0.12	4	3.30	79	4.95	120	41.2
Nickel	<0.1	<0.1	<0.1	2	1.59	80	1.96	98	20.2
Tin	<0.1	<0.1	<0.1	2	1.84	92	2.35	118	24.8
Thallium	<0.1	<0.2	<0.2	40	29.1	73	44.6	112	42.2
Antimony	<0.1	<0.1	<0.1	2	1.31	66	0.42	21	103
Zinc	<0.1	0.67	0.83	2	1.46	40	3.65	149	115
Cobalt	<0.1	<0.1	<0.1	2	1.59	80	2.04	102	24.2
Barium	<0.2	<0.2	<0.2	40	32.5	81	40.1	100	21.0
Vanadium	<0.1	<0.1	<0.1	2	1.59	80	2.18	109	30.7
Beryllium	<0.05	<0.05	<0.05	2	1.73	87	1.38	69	23.1
Copper	<0.2	0.12	0.15	2	2.36	112	3.21	155	32.2
Silver	0.16	0.15	0.16	4	0.32	4.3	0.43	7.0	47.8
Mercury	<0.0003	<0.0003	[a]	0.003	0.00278	93	0.00287	96	3.2

[a]No duplicate analysis for mercury was performed.

6/5/92

TABLE 6-8. JACADS Process Samples QC Table
Scrubber Brine
Matrix Spike/Matrix Spike Duplicate for LIC

Element	Digestion blank, conc., µg/mL	Sample conc., µg/mL	Sample Duplicate Conc., µg/mL	Spike added, µg/mL	Matrix spike Conc., µg/mL	Matrix spike % Recovery	Matrix spike duplicate Conc., µg/mL	Matrix spike duplicate % Recovery	Relative % Difference
Arsenic	<0.1	0.64	0.81	4	3.59	74	3.70	77	4.0
Selenium	<0.1	<0.1	<0.1	1	0.84	84	0.77	77	8.7
Chromium	<0.1	3.34	3.45	4	5.72	60	5.96	66	9.5
Cadmium	<0.1	9.12	9.26	1	9.86	74	10.0	88	17.3
Lead	<0.1	427	683	4		[a]		[a]	
Nickel	<0.1	0.90	0.97	2	2.10	60	2.32	71	16.8
Tin	<0.1	0.67	0.78	2	2.18	76	1.79	56	30.3
Thallium	<0.2	0.35	0.58	20	18.0	88	19.9	98	10.8
Antimony	<0.1	0.69	0.98	2	2.56	94	2.71	101	7.2
Zinc	<0.1	58.5	122	2		[a]		[a]	
Cobalt	<0.1	<0.1	<0.1	2	1.42	71	1.53	77	8.1
Barium	<0.2	<0.2	0.46	20	1.63	8.2	0.43	2.2	115
Vanadium	<0.1	0.10	0.10	2	1.62	76	2.13	102	29.2
Beryllium	<0.05	<0.05	<0.05	2	1.98	99	1.96	98	1.0
Copper	<0.1	6.49	5.82	2	4.75	--[b]	9.60	156	
Silver	<0.1	<0.1	<0.1	4	0.97	24	0.18	4.5	73.1
Mercury	<0.0003	<0.0003	[c]	0.003	0.00293	98	0.00302	101	3.0

[a]Sample concentration was too high for meaningful spike analysis.
[b]The copper spike for this sample was not recovered.
[c]No duplicate sample analysis was performed for mercury.

6/5/92

TABLE 6-9. JACADS Process Samples QC Table
Process Water
Matrix Spike/Matrix Spike Duplicate for LIC

Element	Digestion blank, conc., µg/mL	Sample conc., µg/mL	Sample Duplicate Conc., µg/mL	Spike added, µg/mL	Matrix spike Conc., µg/mL	Matrix spike % Recovery	Matrix spike duplicate Conc., µg/mL	Matrix spike duplicate % Recovery	Relative % Difference
Arsenic	<0.1	<0.1	<0.1	4	4.26	107	4.10	103	3.8
Selenium	<0.1	<0.1	<0.1	1	1.05	105	1.04	104	0.96
Chromium	<0.1	<0.1	<0.1	4	4.06	102	3.87	97	5.0
Cadmium	<0.1	<0.1	<0.1	1	0.99	99	1.00	100	1.0
Lead	<0.1	<0.1	<0.1	4	4.07	102	4.11	103	0.98
Nickel	<0.1	<0.1	<0.1	2	1.92	96	1.96	98	2.1
Tin	<0.1	<0.1	<0.1	2	2.01	101	2.02	101	0
Thallium	<0.2	<0.2	<0.2	20	23.3	117	22.5	113	3.5
Antimony	<0.1	<0.1	<0.1	2	2.04	102	1.80	90	12.5
Zinc	<0.1	<0.1	<0.1	2	2.25	113	2.13	107	5.4
Cobalt	<0.1	<0.1	<0.1	2	2.17	109	2.10	105	3.7
Barium	<0.2	<0.2	<0.2	20	22.9	115	22.3	112	2.6
Vanadium	<0.1	<0.1	<0.1	2	2.18	109	2.13	107	1.8
Beryllium	<0.05	<0.05	<0.05	2	2.17	109	1.98	99	9.6
Copper	<0.1	<0.1	<0.1	2	2.18	109	2.10	105	3.7
Silver	<0.1	<0.1	<0.1	4	1.49	37	1 45	36	2.7
Mercury	<0.0003	<0.0003	[a]	0.003	0.00286	94	0.00288	96	2.1

[a]No duplicate analysis was performed for mercury.

TABLE 6-10. JACADS Process Samples QC Table
Scrubber Liquor
Matrix Spike/Matrix Spike Duplicate for LIC

Element	Digestion blank, conc., µg/mL	Sample conc., µg/mL	Sample Duplicate Conc., µg/mL	Spike added, µg/mL	Matrix spike		Matrix spike duplicate		Relative % Difference
					Conc., µg/mL	% Recovery	Conc., µg/mL	% Recovery	
Arsenic	<0.1	<0.1	<0.1	4	4.33	108	3.62	91	17.1
Selenium	<0.1	<0.1	<0.1	1	1.09	109	0.88	88	21.3
Chromium	<0.1	2.09	1.75	4	5.92	96	5.20	78	20.7
Cadmium	<0.1	<0.1	<0.1	1	1.02	102	0.89	89	13.6
Lead	<0.1	0.67	0.66	4	3.94	82	3.91	81	1.2
Nickel	<0.1	<0.1	<0.1	2	2.00	100	1.87	94	6.2
Tin	<0.1	<0.1	<0.1	2	0.29	15	0.50	25	50.0
Thallium	<0.2	<0.2	<0.2	40	38.9	97	32.9	82	16.8
Antimony	<0.1	<0.1	<0.1	2	0.98	49	1.38	69	33.9
Zinc	<0.1	0.56	0.51	2	2.72	108	2.33	89	19.3
Cobalt	<0.1	<0.1	<0.1	2	1.98	99	1.92	96	3.1
Barium	<0.2	<0.2	<0.2	20	5.82	29	14.0	70	82.8
Vanadium	<0.1	<0.1	<0.1	2	1.89	95	1.99	100	5.1
Beryllium	<0.05	<0.05	<0.05	2	1.89	95	1.91	96	1.0
Copper	<0.1	0.10	0.10	2	2.03	97	2.03	97	0
Silver	0.11	0.12	0.11	4	3.46	84	3.39	82	2.4
Mercury	<0.0003	<0.0003	[a]	0.003	0.00297	99	0.00297	98	1.0

[a]No duplicate sample analysis was performed for mercury.

TABLE 6-11. JACADS LIC
MMT METALS ANALYSIS QC
FRONT HALF

Element	Method blank, µg/mL	Spike added µg/mL	Matrix spike conc, µg/mL	Matrix spike % Recovery	Matrix spike duplicate conc, µg/mL	Matrix spike duplicate % Recovery	Relative % Difference
Arsenic	<0.05	0.40	0.418	104	0.395	99	4.9
Selenium	<0.05	0.40	0.405	101	0.383	96	5.1
Chromium	<0.01	0.40	0.385	96	0.390	98	2.1
Cadmium	<0.01	0.40	0.395	99	0.420	105	5.9
Lead	0.092	0.40	0.275	69	0.314	79	13.5
Barium	<0.100	0.40	0.420	105	0.431	108	2.8
Beryllium	<0.005	0.40	0.417	104	0.416	104	0
Silver	<0.02	0.40	<0.02	--[a]	<0.02	--[a]	--[a]
Tin	<0.05	0.40	0.265	66	0.270	68	3.0
Antimony	<0.05	0.40	0.333	83	0.323	81	2.4
Phosphorus	0.104	0.40	1.025	230	1.153	262	13.0
Zinc	<0.05	0.40	0.304	76	0.314	79	3.8
Cobalt	<0.010	0.40	0.312	78	0.314	79	1.3
Nickel	<0.03	0.40	0.315	79	0.310	78	1.3
Boron	<0.05	0.40	0.405	101	0.407	102	0.98
Manganese	<0.005	0.40	0.309	77	0.316	79	2.6
Vanadium	<0.05	0.40	0.298	74	0.299	75	1.3
Copper	<0.05	0.40	0.315	79	0.312	78	1.3
Thallium	<0.005	0.04	0.038	95	0.035	88	7.6
Mercury	<0.0003	0.003	0.00305	102	0.00303	101	0.98

[a]There was no recovery of silver spikes.

TABLE 6-12. JACADS LIC
MMT METALS ANALYSIS QC
BACK HALF

Element	Method blank, µg/mL	Spike added µg/mL	Matrix spike conc, µg/mL	Matrix spike % Recovery	Matrix spike duplicate conc, µg/mL	Matrix spike duplicate % Recovery	Relative % Difference
Arsenic	<0.05	0.40	0.351	88	0.323	81	8.3
Selenium	<0.05	0.40	0.355	89	0.350	88	1.1
Chromium	<0.01	0.40	0.372	93	0.376	94	1.1
Cadmium	<0.01	0.40	0.385	96	0.385	96	0
Lead	<0.05	0.40	0.525	131	0.523	131	0
Barium	<0.10	0.40	0.412	103	0.403	101	2.0
Beryllium	<0.005	0.40	0.389	97	0.392	98	1.0
Silver	<0.02	0.40	0.432	108	0.085	21	135
Tin	<0.05	0.40	0.388	97	0.770	193	66.2
Antimony	<0.05	0.40	0.382	96	0.365	91	5.3
Phosphorus	0.100	0.40	1.01	252	1.13	282	11.2
Zinc	0.135	0.40	0.400	66	0.492	89	29.7
Cobalt	0.097	0.40	0.402	76	0.392	74	2.7
Nickel	<0.03	0.40	0.376	94	0.384	96	2.1
Boron	<0.05	0.40	0.497	124	<0.05	--[a]	--[a]
Manganese	<0.005	0.40	0.383	96	0.380	95	1.0
Vanadium	<0.05	0.40	0.404	101	0.402	101	0
Copper	<0.05	0.40	0.394	99	0.397	99	0
Thallium	<0.005	0.04	0.030	75	0.029	72	4.0
Mercury	<0.0003	0.003	0.00292	97	0.00295	98	1.0

[a]Boron was not recovered from the matrix spike duplicate sample.

Low amounts for barium, antimony and tin were recovered for the scrubber liquor spiked samples. Relative percent differences varied from 0 to 82% with poorly recovered elements giving higher relative percent differences.

Scrubber-brine samples gave acceptable results for all elements other than silver, barium, tin, nickel and chromium.

Caustic QC samples gave acceptable average recoveries for all metals except silver, zinc, antimony and chromium. The consistently high relative differences for these sample results indicate a bias introduced during the spiking process.

The MMT QC samples gave high recoveries for phosphorus due to phosphorus contamination in glassware. With the exception of silver and boron, all other average recoveries were within acceptable limits.

The precision and accuracy in the results of the relatively clean sample matrices of process water and metal-train matrix spikes demonstrated the proficiency of the laboratory. Sample matrices such as the scrubber liquor, brine, caustic samples, and fuel oil produced poorer, more erratic recoveries that are indicative of problems from such matrices.

Low levels of chloride in silver-containing samples cause insoluble AgCl to form. Therefore, samples of this type that contain chloride at low levels will yield poor recoveries of Ag. Similarly, samples that contain sulfate ion will form insoluble $BaSO_4$ whenever barium is present, resulting in poor recoveries for barium.

6.5 HCl Analysis

The HCl field spikes are given in Table 6-13. Recoveries were variable. But the results indicate that the method can detect the high spikes with good accuracy. Tables 6-14 through 6-17 give the MS and MSD results for the process samples. Recoveries were better than 80% in all samples.

6.6 QA/QC Summary

The results of the QA/QC samples indicate that sample collection and analysis were performed in adherence to method criteria. Spike recoveries were adequate in most cases.

A CEM audit was conducted prior to the start of the trial burns.

Included in the appendices are lists of reagents, suppliers, and lot numbers for the chemicals.

The metals blanks contained several of the target metals. The slight contamination is probably from the acids used to prepare the samples. The metals results do, however, indicate compliance with proposed limits, even if results were not corrected for the corresponding blanks.

TABLE 6-13. CHLORIDE SPIKE RESULTS

Sample ID	Sample No.	Chloride concentration, µg/mL Amount found	Amount spiked	% Recovery
0.1N NaOH				
Blank	5J-2-122	ND[a]		
Low spike	5J-2-123	2.35	2.50	94.0
Medium spike	5J-2-124	18.5	25.0	74.0
High spike	5J-2-125	246	250	98.4
H_2O				
Blank	5J-2-121	0.147		
Low spike	5J-2-118	2.26	2.50	90.4
Medium spike	5J-2-119	22.1	25.0	88.4
High spike	5J-120	242	250	96.8

[a]ND = <0.12 µg/mL.

TABLE 6-14. PROCESS WATER
MATRIX SPIKE/MATRIX SPIKE DUPLICATE RECOVERY
(ANION Analysis)
Trial Burn 4

Sample ID: 5J-4-51
5J-4-51MS Process Water
5J-4-51MSD

Compound	Spike added (µg/mL)	Sample concn., (µg/mL)	Matrix Spike Concn., (µg/mL)	Matrix Spike Recovery %	Matrix Spike Duplicate Concn., (µg/mL)	Matrix Spike Duplicate Recovery %	RPD
Flouride	5	ND[a]	4.79	95.8	4.46	89.2	1.78
Chloride	5	0.96	5.87	98.2	5.59	92.6	1.47
Phosphate	75	ND	70.5	94.0	68.7	91.6	0.65

ND = Not detected (detection limit - Fl^- 0.08 µg/mL, Cl^- 0.08 µg/mL, PO_4^{-3} 1.2 µg/mL)

TABLE 6-15. SCRUBBER LIQUOR
MATRIX SPIKE/MATRIX SPIKE DUPLICATE RECOVERY
(ANION Analysis)
Trial Burn 3

Sample ID: 5J-3-62
5J-3-62MS Scrubber Liquor
5J-3-62MSD

Compound	Spike added (μg/mL)	Sample concn., (μg/mL)	Matrix Spike Concn., (μg/mL)	Matrix Spike Recovery %	Matrix Spike Duplicate Concn., (μg/mL)	Matrix Spike Duplicate Recovery %	RPD
Flouride	5	ND[a]	4.84	96.8	4.63	92.6	1.11
Chloride	5	2.75	7.65	981	7.45	941	1.05
Phosphate	75	3.20	73.4	93.6	71.3	90.9	0.74

ND - Not detected (detection limit - Fl^- 0.08 μg/mL, Cl^- 0.08 μg/mL, PO_4^{-3} 1.2 μg/mL)

TABLE 6-16. BRINE
MATRIX SPIKE/MATRIX SPIKE DUPLICATE RECOVERY
(ANION Analysis)
Trial Burn 2

Sample ID: 5J-2-39
5J-2-39MS Brine
5J-2-39MSD

Compound	Spike added (µg/mL)	Sample concn., (µg/mL)	Matrix Spike Concn., (µg/mL)	Matrix Spike Recovery %	Matrix Spike Duplicate Concn., (µg/mL)	Matrix Spike Duplicate Recovery %	RPD
Flouride	5	0.74	5.16	88.3	5.04	86.1	0.650
Chloride	5	10.4	16.3	119	15.8	109	2.28
Phosphate	75	26.0	101	99.3	99.8	98.4	0.230

ND = Not detected (detection limit - Fl^- 0.08 µg/mL, Cl^- 0.08 µg/mL, PO_4^{-3} 1.2 µg/mL)

TABLE 6-17. CAUSTIC
MATRIX SPIKE/MATRIX SPIKE DUPLICATE RECOVERY
(ANION Analysis)
Trial Burn 3

Sample ID: 5J-3-18
5J-3-18MS Process Water
5J-3-18MSD

Compound	Spike added (ug/mL)	Sample concn., (ug/mL)	Matrix Spike Concn., (ug/mL)	Matrix Spike Recovery %	Matrix Spike Duplicate Concn., (ug/mL)	Matrix Spike Duplicate Recovery %	RPD
Flouride	5	2.47	6.77	86	6.52	81	1.50
Chloride	5	6.94	12.1	104	11.80	96.4	1.80
Phosphate	75	ND[a]	69.5	92.7	67.4	89.9	0.770

ND - Not detected (detection limit - Fl^- 0.08 µg/mL, Cl^- 0.08 µg/mL, PO_4^{-3} 1.2 ug/mL)

B088

SRI-APG-92-385-7530.5.1-I-3R

RESULTS OF THE RCRA TRIAL BURN AND TSCA DEMONSTRATION BURN OF THE DEACTIVATION FURNACE SYSTEM WITH M55 VX ROCKETS AT THE JOHNSTON ATOLL CHEMICAL AGENT DISPOSAL SYSTEM

FINAL REPORT

Prepared for

Program Manager for
Chemical Demilitarization
Environmental and Monitoring Division

Project 7530.5.1

RESULTS OF THE RCRA TRIAL BURN AND TSCA DEMONSTRATION BURN OF THE DEACTIVATION FURNACE SYSTEM WITH M55 VX ROCKETS AT THE JOHNSTON ATOLL CHEMICAL AGENT DISPOSAL SYSTEM

FINAL REPORT

Prepared for

PROGRAM MANAGER FOR
CHEMICAL DEMILITARIZATION
ENVIRONMENTAL AND MONITORING DIVISION

SOUTHERN RESEARCH INSTITUTE
2000 Ninth Avenue South
P.O. Box 55305
Birmingham, AL 35255-5305

June 23, 1992
SRI-APC-92-385-7530.5.1-I-R3

RESULTS OF THE RCRA TRIAL BURN AND TSCA DEMONSTRATION BURN OF THE DEACTIVATION FURNACE SYSTEM WITH M55 VX ROCKETS AT THE JOHNSTON ATOLL CHEMICAL AGENT DISPOSAL SYSTEM

Executive Summary

Under Congressional mandate, the Department of the Army must dispose of existing stocks of obsolete chemical warfare agent munitions. The first fully integrated facility for accomplishing this task is the Johnston Atoll Chemical Agent Disposal System (JACADS). JACADS consists of four incineration systems: the Liquid Incinerator (LIC) for the disposal of liquid agents, the Deactivation Furnace System (DFS) for the disposal of energetic materials, the Metal Parts Furnace (MPF) for the decontamination of metal munitions and metal parts that have been in contact with chemical agents, and the Dunnage Incinerator (DUN) for the disposal of packing material and other dunnage associated with the munitions. JACADS eventually will be used to destroy chemical munitions and storage containers filled with nerve agents (GB and VX) and with sulfur mustard (H and HD).

As part of the initial performance evaluations of the JACADS facility (i.e., operational verification testing, or OVT), Southern Research Institute (SRI), in concert with other subcontractors, coordinated and carried out sampling and sample analyses in conjunction with one trial burn, consisting of four test runs, in the DFS that were performed on March 4-12, 1992.

The feed materials employed in this trial burn were components of M55 rockets that had previously been filled with the liquid agent VX [O-ethyl S-(2-diisopropylaminoethyl) methylphosphonothioate]. As part of an earlier step in the demilitarization process, the liquid VX had previously been drained from the rockets for eventual incineration in the LIC. The resulting drained rockets were cut into several smaller pieces and fed into the DFS as feed materials in the test runs described here. Throughout the entire draining, cutting, and burning process, the rockets remained in their M441 fiberglass shipping and firing (S/F) tubes. Hence, the two principal organic hazardous constituents (POHCs) in the DFS feed material were polychlorinated biphenyls (PCBs) from the S/F tubes of M55 rockets and nitroglycerin from the M55 rocket-motor propellant.

The trial burn served the dual purpose of a Toxic Substances Control Act (TSCA) Demonstration Burn, to show the destruction and removal efficiency (DRE) of the PCBs found in the S/F tubes of M55 rockets, and a Resource Conservation and Recovery Act (RCRA) Trial Burn, to show the DRE of nitroglycerin from the M55 rocket-motor propellant. The general objective of the tests was to demonstrate that the DFS could efficiently destroy the POHCs while operating in an environmentally safe manner. This report summarizes the field activities, chemical analyses, and data analyses associated with these tests.

The specific objectives of this project were to:

1. Perform a RCRA Trial Burn and a TSCA Demonstration Burn for the DFS.

2. Obtain a destruction and removal efficiency of 99.9999% or greater for PCBs (or no PCBs detected in the stack).

3. Obtain a destruction and removal efficiency of 99.99% or greater for nitroglycerin (or no nitroglycerin detected in the stack).

4. Demonstrate that particulate emissions from the exhaust stack do not exceed the limit of 180 milligrams per dry standard cubic meter (0.08 grains per dry standard cubic foot) when corrected to a 7% oxygen content in the exhaust gas.

5. Generate data reflecting an average combustion efficiency of 99.9% or greater in the DFS afterburner every hour.

6. Show (1) that the Pollution Abatement System (PAS) removes at least 99.9% of hydrogen chloride from the exhaust gas or (2) that the emission rate of hydrogen chloride is less than 4 pounds per hour.

7. Determine by actual monitoring that the VX vapor concentration in the stack is less than the Allowable Stack Concentration (ASC) (0.0003 mg/m^3) for this agent.

8. Monitor the DFS exhaust-stack emissions for:

   O_2 (oxygen)
   CO (carbon monoxide)
   CO_2 (carbon dioxide)
   NO_x (nitrogen oxides)
   Volatile and semivolatile products of incomplete combustion (PICs)
   Polychlorinated dibenzo-p-dioxins and dibenzofurans (PCDD/F)
   Trace Metals
   Total hydrocarbons

9. Analyze solid residues (ash, brine salts) and liquid process samples for:

   PCBs
   Nitroglycerin
   Volatile and semivolatile PICs
   PCDD/F
   Toxicity Characteristic Leaching Procedure (TCLP) Metals
   F^- (Fluoride, soluble)
   Cl^- (Chloride, soluble)

PO_4^{-3} (Phosphate, soluble)
pH (corrosivity)
Reactivity

During each test run, samples were collected at various locations within the process to allow the calculation of destruction and removal efficiency (DRE) and removal efficiency (RE) for the RCRA-regulated and TSCA-regulated substances.

The samples collected from the exhaust streams were analyzed specifically for PCBs and nitroglycerin and for both organic and inorganic PICs. The stack was also monitored continuously for VX. The PICs included volatile compounds, semivolatile compounds (e.g., PCDD/F). Metals, particulates, and HCl were also analyzed. In addition, solid and liquid waste samples from the JACADS plant were analyzed to identify any hazardous components that may have been present.

For the first, second, and fourth test runs, the DRE for PCBs was better than 99.9999%, or six 9s . Although the DRE for the third test run was slightly lower than six 9s, the PCB emission rate for this test was well below the corresponding emission rates of the three commercially operated PCB incinerators and also below that of the U.S. Army Chemical Agent Munitions Disposal Facility (CAMDS) at Tooele, Utah, as outlined in the JACADS TSCA R&D Permit issued January 7, 1991. The stack gas was also monitored for PCDD/F, and the PCDD/F levels were found to be quite low, i.e., near the detection limits. The PCDD/F levels across the four test runs indicated steadily declining emissions.

The RCRA-regulated parameters for the JACADS plant included concentration and DRE for nitroglycerin and VX, particulate concentrations, HCl emissions, incinerator temperatures, and combustion efficiency. All of these parameters met the RCRA requirements. Although low levels of volatile and semivolatile PICs were found in the stack emissions, the compounds that were detected were typical of the incineration process. Likewise, the low levels of organics that were found in the waste samples from the plant were similar to those found in earlier tests at JACADS and at the chemical agent munitions disposal system in Tooele, Utah.

Target metals in the stack gases were either not detected or were found at trace levels. In addition, the analyses of waste samples from the DFS indicated that, except for lead and cadmium in the scrubber brines, no metals were present above regulated levels.

TABLE OF CONTENTS

		Page
	Executive Summary	ii
1.	INTRODUCTION	1
1.1	Purpose of the Test Program	1
1.2	Scope of This Report	3
2.	SUMMARY OF DATA	4
2.1	Summary	4
2.1.1	Steady State Operating Conditions	4
2.1.2	Destruction of PCB	4
2.1.3	Nitroglycerin Emissions	4
2.1.4	Particulate Emissions	4
2.1.5	HCl Emissions	10
2.1.6	Combustion Efficiency	10
2.1.7	Metals Analysis	10
2.1.8	Oxygen Concentration	10
2.1.9	Chemical Agent Concentration	10
2.1.10	Products of Incomplete Combustion	10
2.1.11	Dioxin/Furan	14
2.1.12	Metals	14
2.1.13	Total Hydrocarbons	14
2.2	Quality Assurance/Quality Control	18
3.	TEST FACILITY DESCRIPTION	19
3.1	JACADS Description	19
3.2	DFS Description	19
3.3	Description of M55 Rockets	25
3.3.1	Feed Rate	29
3.3.2	Physical Description of the M441 Shipping and Firing Tube	29
3.3.3	Chemical Description of the M441 Shipping and Firing Tube	30
3.3.4	Description of the Rocket Motor	30
3.4	Sampling Locations	30
3.5	Facility Instrumentation	30
4.	TEST PROCEDURES	34
4.1	Preparation for Testing	34
4.2	Continuous Monitoring Methods	34
4.2.1	Continuous Emission Monitors	34
4.2.2	Chemical Agent Monitors	34
4.3	Manual Sample-Collection Methods	35
4.3.1	Modified Method Five	35
4.3.2	Sampling Train for Energetic Materials (STEM)	35
4.3.3	Volatile Organic Sampling Train (VOST)	36
4.3.4	Method Five Acid Train	36
4.3.5	Multiple Metals Train (MMT)	36
4.3.6	Particle Size Distribution	36

(continued)

TABLE OF CONTENTS (continued)

		Page
4.3.7	Orsat	36
4.3.8	Total Hydrocarbons	37
4.3.9	Support Methods	37
4.4	Trial Burn and Sample Collection Sequence and Procedure	37
4.4.1	Trial Burn Sequence and Procedure	37
4.4.2	Sample Collection Sequence	39
4.4.3	Sample Collection Procedure	41
4.5	Sampling Contingency Plan	43
4.6	Analysis	43
4.6.1	Semivolatile Organic Analysis	43
4.6.2	Volatile Organic Analysis	50
4.6.3	Anions Analysis	51
4.6.4	Metals Analysis	51
4.6.5	pH	52
4.6.6	Particulates	52
5.	TEST RESULTS	53
5.1	Introduction	53
5.2	Process Data	53
5.2.1	General	53
5.2.2	Combustion Efficiency	53
5.2.3	Rocket Feed Rate	63
5.2.4	Orsat	63
5.2.5	Chemical Agent	63
5.3	Categories of Analytical Data	63
5.3.1	Results from the Determinations of Semivolatile Organics	65
5.3.2	Results for the Determination of Energetics	89
5.3.3	PCB Results	89
5.3.4	Results from the Determinations of Volatile Organics	97
5.3.5	Anion Determinations	112
5.3.6	Metals Analysis	115
5.3.7	pH Analysis	127
5.3.8	Particulate Measurements	127
5.3.9	Particle Size Distributions	129
5.4	Emission Rates and DREs of the POHCs	132
5.4.1	Results	132
6.	QUALITY ASSURANCE AND QUALITY CONTROL	135
6.1	Background	135
6.2	Semivolatile Organic Analysis	136
6.3	Volatile Organic Analysis	138
6.4	Metals Analysis	145
6.5	Anion Analysis	154
6.6	Energetics	154
6.6	QA/QC Summary	154

(continued)

TABLE OF CONTENTS (continued)

		Page
APPENDIX A	CHAIN OF CUSTODY	A-1
APPENDIX B	OPERATOR LOGS	B-1
APPENDIX C	PROCESS DATA	C-1
APPENDIX D	SAMPLING DATA	D-1
APPENDIX E	CONTINUOUS EMISSION DATA AND AGENT MONITORING DATA	E-1
APPENDIX F	SOURCE EMISSIONS SURVEY OF JOHNSTON ATOLL CHEMICAL AGENT DISPOSAL SYSTEM DFS INCINERATOR STACK JOHNSTON ATOLL FOR SOUTHERN RESEARCH INSTITUTE FROM METCO ENVIRONMENTAL	F-1
APPENDIX G	TEST PLAN AND CONTRACT MODIFICATIONS	G-1
APPENDIX H	DIOXIN	H-1
APPENDIX I	GC/MS VOLATILES	I-1
APPENDIX J	GC/MS SEMIVOLATILES	J-1
APPENDIX K	FILTER WEIGHTS ACETONE RESIDUE	K-1
APPENDIX L	ANION ANALYSIS	L-1
APPENDIX M	METAL ANALYSIS	M-1
APPENDIX N	TCLP	N-1
APPENDIX O	ENERGETICS	O-1
APPENDIX P	PCBS	P-1
APPENDIX Q	NOTEBOOKS FIELD	Q-1
APPENDIX R	FINAL OPERATIONS TEST PLAN	N-1

LIST OF TABLES

Table		Page
2-1	SUMMARY OF SYSTEM TEST CONDITIONS AND RESULTS	5
2-2	SUMMARY OF HCL AND PARTICULATE EMISSIONS AS MEASURED BY THE METHOD 5 ACID TRAIN	6
2-3	SUMMARY OF PARTICULATE EMISSIONS AS MEASURED BY THE METHOD 5 MULTIPLE METALS TRAIN	7
2-4	SUMMARY OF PCB EMISSIONS AS MEASURED BY THE MM5 TRAIN SAMPLING AND PCB	8
2-5	SUMMARY OF NITRGLYCERIN EMISSIONS AS MEASURED BY THE STEM TRAIN.	9
2-6	SAMPLES WITH LEAD AND CADMIUM CONCENTRATIONS ABOVE THE REGULATORY LIMIT	11
2-7	ACAMS QUANTITATION LIMITS	12
2-8	SYSTEM PERFORMANCE FOR VOLATILE PRODUCTS OF INCOMPLETE COMBUSTION	13
2-9	SYSTEM PERFORMANCE FOR SEMIVOLATILE PRODUCTS OF INCOMPLETE COMBUSTION	15
2-10	SYSTEM PERFORMANCE FOR POLYCHLORINATED DIBENZO-P-DIOXINS AND DIBENZOFURANS	16
2-11	SYSTEM PERFORMANCE FOR METALS	17
3-1	DFS SAMPLING LOCATIONS	28
3-2	LOCATION OF SAMPLING POINTS FOR METHOD 5 ACID TRAIN	31
3-3	LOCATION OF SAMPLING POINTS FOR MM5 TRAIN AND STEM	32
3-4	FACILITIES EMISSIONS MONITORING INSTRUMENTATION	33
4-1	SUMMARY OF SAMPLING AND ANALYSIS ACTIVITY	44
5-1	PDAR DATA SUMMARY FOR DFS BURNS	54
5-2	PROCESS DATA FROM MANUAL STACK SAMPLING	57
5-3	COMBUSTION EFFICIENCY RESULTS	62

(continued)

LIST OF TABLES (continued)

Table		Page
5-4	INTEGRATED ORSAT DATA	64
5-5	MM5 TRAIN SAMPLING AND PCB RESULTS	66
5-6	DETERMINATION OF PCBS IN 4J TRAINS	69
5-7	DETERMINATIONS OF TOTAL PCDFS/PCDDS IN MM5 TRAINS	71
5-8	DETERMINATION OF TARGET PCDFS/PCDDS IN MM5 TRAINS FROM DFS	73
5-9	DETERMINATION OF TARGET PCDFS/PCDDS IN ASH	75
5-10	DETERMINATION OF TOTAL PCDFS/PCDDS IN ASH SAMPLES	76
5-11	SEMIVOLATILE RESULTS SUMMARY FOR TRIAL BURN 3 MM5 TRAIN	78
5-12	DETERMINATION OF TOTAL PCDFS/PCDDS IN PROCESS WATER SAMPLES	80
5-13	DETERMINATION OF TOTAL PCDFS/PCDDS IN SCRUBBER LIQUOR SAMPLES FROM DFS	81
5-14	DETERMINATION OF TOTAL PCDFS/PCDDS IN BRINE SAMPLES	82
5-15	DETERMINATION OF TOTAL PCDFS/PCDDS IN CAUSTIC SAMPLES	83
5-16	DETERMINATION OF TOTAL PCDFS/PCDDS IN FUEL SAMPLES	84
5-17	SEMIVOLATILE RESULTS SUMMARY FOR TRIAL BURN 1	85
5-18	SEMIVOLATILE RESULTS SUMMARY FOR TRIAL BURN 2	86
5-19	SEMIVOLATILE RESULTS SUMMARY FOR TRIAL BURN 3	87
5-20	SEMIVOLATILE RESULTS SUMMARY FOR TRIAL BURN 4	88
5-21	STEM TRAIN SAMPLING AND RESULTS	90
5-22	STEM TRAIN RESULTS	91
5-23	PAS ENERGETICS RESULTS	92
5-24	PAS ENERGETICS RESULTS	93
5-25	PAS ENERGETICS RESULTS	94

(continued)

LIST OF TABLES (continued)

Table		Page
5-26	PAS ENERGETICS RESULTS	27
5-27	PCB RESULTS	96
5-28	RESULTS OF PCB ANALYSIS, ASH SAMPLES	98
5-29	VOST VOLATILE ORGANICS RESULTS SUMMARY TRIAL BURN 1	99
5-30	VOST VOLATILE ORGANICS RESULTS SUMMARY TRIAL BURN 2	102
5-31	VOST VOLATILE ORGANICS RESULTS SUMMARY TRIAL BURN 3	104
5-32	VOST VOLATILE ORGANICS RESULTS SUMMARY TRIAL BURN 4	106
5-33	AQUEOUS VOLATILE ORGANICS SUMMARY	108
5-34	METHOD 5 ACID TRAIN CONDITIONS AND RESULTS	113
5-35	METHOD 5 ACID TRAIN RESULTS	116
5-36	ANION CONCENTRATIONS	118
5-37	METHOD 5 METAL TRAIN CONDITIONS AND RESULTS	120
5-38	METHOD 5 MULTIPLE METALS TRAIN RESULTS	121
5-39	METAL ANALYSIS DFS PROCESS SAMPLES	124
5-40	JACADS DFS TCLP METALS ANALYSIS	126
5-41	SAMPLE REACTIVITY AND pH	128
6-1	VOST AUDIT RESULTS	139
6-2	MATRIX SPIKE/MATRIX SPIKE DUPLICATE RECOVERY (VOA Analysis)	140
6-3	MATRIX SPIKE/MATRIX SPIKE DUPLICATE RECOVERY (VOA Analysis)	141
6-4	MATRIX SPIKE/MATRIX SPIKE DUPLICATE RECOVERY (VOA Analysis)	142
6-5	MATRIX SPIKE/MATRIX SPIKE DUPLICATE RECOVERY (VOA Analysis)	143
6-6	MATRIX SPIKE/MATRIX SPIKE DUPLICATE RECOVERY (VOA Analysis)	144

(continued)

LIST OF TABLES (continued)

Table		Page
6-7	JACADS PROCESS SAMPLES QC TABLE Fuel Oil Post Test	146
6-8	JACADS PROCESS SAMPLES QC TABLE Scrubber Brine	147
6-9	JACADS PROCESS SAMPLES QC TABLE Process Water	148
6-10	JACADS PROCESS SAMPLES QC TABLE Scrubber Liquor Post Test	149
6-11	JACADS PROCESS SAMPLES QC TABLE Caustic	150
6-12	JACADS PROCESS SAMPLES QC TABLE MMT METALS ANALYSIS QC FRONT HALF	151
6-13	JACADS DFS MMT METALS ANALYSIS QC BACK HALF	152
6-14	JACADS DFS HDC ASH COMPOSITE TCLP QC TABLE	153
6-15	CHLORIDE SPIKE RESULTS	155
6-16	PROCESS WATER MS/MSD RECOVERY (ANION)	156
6-17	SCRUBBER LIQUOR MS/MSD RECOVERY (ANION)	157
6-18	SCRUBBER BRINE MS/MSD RECOVERY (ANION)	158
6-19	FUEL OIL MS/MSD RECOVERY (ANION)	159
6-20	CAUSTIC MS/MSD RECOVERY (ANION)	160
6-21	LABORATORY SPIKING OF STEM EXTRACTS, MS/MSD	161

LIST OF FIGURES

Figure		Page
3-1	LOCATION OF JOHNSTON ATOLL RELATIVE TO OTHER ISLANDS	20
3-2	MAP OF JOHNSTON ATOLL	21
3-3	ILLUSTRATION OF DFS AND SAMPLE POINT LOCATIONS	22
3-4	PROCESS DIAGRAM AND SAMPLING POINTS FOR POLLUTION ABATEMENT SYSTEM (PAS)	24
3-5	MPF, DFS, AND DFS STACK SAMPLE POINT LOCATIONS	26
3-6	M55 ROCKET CUT-AWAY	27
5-1	DFS OXYGEN CONCENTRATIONS DURING TEST 1	58
5-2	DFS FUEL FLOWS DURING TEST 2	59
5-3	DFS KILN GAS TEMPERATURES DURING TEST 3	60
5-4	DFS FLUE GAS TEMPERATURES DURING TEST 4	61
5-5	AVERAGE DIFFERENTIAL MASS PARTICLE SIZE DISTRIBUTION FROM DFS TESTS 1,2,4 A, AND 4	130
5-6	AVERAGE PARTICLE SIZE DISTRIBUTION FOR DFS TESTS 1,2,4 A, AND 4 ON CUMULATIVE PERCENT LESS THAN SIZE BASIS	131

LIST OF ACRONYMS

ACAMS	Automatic Chemical Agent Monitoring System
ASC	Allowable Stack Concentration
BTU	British Thermal Unit
CAMDS	Chemical Agent Munitions Disposal System
CEM	Continuous Emission Monitor
CFM	cubic feet per minute
COC	Chain of Custody
DFS	Deactivation Furnace System
dscm	Dry standard cubic meter (20 °C, 1 ATM)
DRE	Destruction and Removal Efficiency
DSCF	Dry standard cubic foot (68 °F, 1 ATM)
ECR	Explosion Containment Room
EPA	Environmental Protection Agency
GC/ECD	Gas Chromatography/Electron Capture Detection
GC/MS	Gas Chromatography/Mass Spectrometry
gph	gallons per hour
HDC	Heated discharge conveyer
HpCDD	Heptachlorodibenzodioxin
HpCDF	Heptachlorodibenzofuran
HRGC/HRMS	High Resolution Gas Chromatography/High Resolution Mass Spectrometry
HxCDD	Hexachlorodibenzodioxin
HxCDF	Hexachlorodibenzofuran
in. w.c.	inches water column
JACADS	Johnson Atoll Chemical Agent Disposal System
kscfh	thousands of standard cubic feet per hour
lb/cf	pounds per cubic foot
lb/hr	pounds per hour
LIC	Liquid Incinerator
μg/mL	Microgram per milliliter
MM5	Modified Method 5 Sampling Train
MMT	Multiple Metals Sampling Train
M5AT	Method 5 Acid Train
NDIR	Nondispersive Infrared
ng/m^3	Nanogram per cubic meter
OCDD	Octachlorodibenzodioxin
OVT	Operational Verification Test
PAS	Pollution Abatement System
PCBs	Polychlorinated Biphenyls
PCDD/F	Polychlorinated Dibenzodioxins/furans
PDAR	Process Data Acquisition and Reporting
PeCDD	Pentachlorodibenzodioxin
PeCDF	Pentachlorodibenzofuran
PM Cml Demil	Program Manager for Chemical Demilitarization
POHC	Principal Organic Hazardous Constituents
ppb	Parts per billion

(continued)

LIST OF ACRONYMS (continued)

ppm	Parts per million
R&D	Research and Development
RCl	Total chlorinated hydrocarbons
RCRA	Resource Conservation and Recovery Act
RSM	Rocket Shear Machine
S/F Tubes	Shipping and Firing Tubes
SRI	Southern Research Institute
STEM	Sampling Train for Energetic Materials
SW-846	Test Methods for Evaluating Solid Waste
TB	Trial Burn
TCDD	Tetrachlorodibenzodioxin
TCDF	Tetrachlorodibenzofuran
TCLP	Toxicity Characteristic Leaching Procedure
THC	Total hydrocarbons
TSCA	Toxic Substances Control Act
UE&C	United Engineers and Constructors
VOA	Volatile Organic Analytes or Analysis
VOST	Volatile Organic Sampling Train

RESULTS OF THE RCRA TRIAL BURN AND TSCA DEMONSTRATION BURN OF THE DEACTIVATION FURNACE SYSTEM WITH M55 VX ROCKETS AT THE JOHNSTON ATOLL CHEMICAL AGENT DISPOSAL SYSTEM

1. INTRODUCTION

1.1 Purpose of the Test Program

Under Congressional mandate, the Department of the Army must dispose of existing stocks of obsolete chemical warfare agent munitions. Accordingly, the Army intends to operate eight facilities throughout the country to dispose of chemical munitions. The first fully integrated demilitarization facility, the Johnston Atoll Chemical Agent Disposal System (JACADS), was constructed at Johnston Atoll in the Pacific. JACADS was designed for the full-scale demilitarization of chemical munitions and storage containers and for the destruction of nerve agents (GB and VX) and mustard agents (H and HD). The combustion facilities at JACADS include the Deactivation Furnace System (DFS), the Liquid Agent Incinerator (LIC), the Dunnage Incinerator (DUN), and the Metals Parts Furnace (MPF).

The Army has scheduled operational verification testing (OVT) at the JACADS facility. The completion of OVT at Johnston Atoll is pivotal because, by Congressional Order, no chemical-agent disposal may be conducted at any Army facility [except the Chemical Agent Munitions Disposal System (CAMDS) located at Tooele Army Depot in Tooele, Utah] until the completion of the performance evaluation (i.e., the planned series of OVTs) at Johnston Atoll.

In partial fulfillment of the OVT requirements, a trial burn was performed on the DFS at JACADS over the period of March 4 through March 12, 1992. In this trial burn, M55 VX rockets that had previously been drained of their liquid VX content were used as the feed material. This document is the report from this trial burn. This report has been prepared by Southern Research Institute (SRI) for the Program Manager for Chemical Demilitarization (PM Cml Demil). The work described here was carried out by SRI under subcontract to United Engineers and Constructors (UE&C) as a part of their prime contract (DACA87-86-C-0098) with PM Cml Demil.

The feed materials employed in this trial burn were components of M55 rockets that had previously been filled with the liquid agent VX [O-ethyl S-(2-diisopropylaminoethyl) methylphosphonothioate]. As part of an earlier step in the demilitarization process, the liquid VX had previously been drained from the rockets for eventual incineration in the LIC. The resulting drained rockets were sheared into several smaller pieces and fed into the DFS as feed materials in the trial burns described here. Throughout the entire draining, shearing, and burning process, the rockets remained in their M441 fiberglass shipping and firing (S/F) tubes. Hence, the two principal organic hazardous constituents (POHCs) in the DFS feed material were polychlorinated biphenyls (PCBs) from the S/F tubes of M55 rockets and nitroglycerin from the M55 rocket-motor propellant.

The burn served the dual purpose of a Toxic Substances Control Act (TSCA) Demonstration Burn and a Resource Conservation and Recovery Act (RCRA) Trial Burn. The objective of the TSCA Demonstration Burn was to show the destruction and removal efficiency (DRE) of the polychlorinated biphenyls (PCBs) found in the S/F tubes of M55 Rockets. The objective of the RCRA Trial Burn was to demonstrate compliance with RCRA-specified performance criteria for the DFS. These performance criteria addressed (1) the DRE of nitroglycerin from the M55 rocket-motor propellant, (2) the emission from the exhaust stack of particulate matter, carbon monoxide and acid gas, (3) the characteristics of the combustion residue, and (4) the various parameters relating to furnace operation.

The pertinent TSCA and RCRA performance criteria are summarized as follows:

- A destruction and removal efficiency of 99.9999% or greater for PCBs (or no PCBs detected in the stack) must be obtained.

- A destruction and removal efficiency of 99.99% or greater for nitroglycerin (or no nitroglycerin detected in the stack) must be obtained.

- Particulate emissions from the exhaust stack must not exceed a limit of 180 milligrams per dry standard cubic meter (0.08 grains per dry standard cubic foot) when corrected to 7% oxygen content in the exhaust gas.

- An average combustion efficiency of 99.9% or greater must be obtained in the DFS afterburner every hour.

- The removal of hydrogen chloride from the exhaust gas by the pollution abatement system (PAS) must be 99.9% or greater, or the emission rate of hydrogen chloride must be less than 4 pounds per hour.

- The VX vapor concentration in the stack must be less than the Allowable Stack Concentration (ASC) (0.0003 mg/m^3).

Aside from the above criteria, there was a requirement to monitor the DFS exhaust-stack emissions for:

O_2 (oxygen)
CO (carbon monoxide)
CO_2 (carbon dioxide)
NO_x (nitrogen oxides)
Volatile and semivolatile products of incomplete combustion (PICs)
Polychlorinated dibenzo-p-dioxins and dibenzofurans (PCDD/F)
Trace Metals
Total hydrocarbons
HF

In addition, it was also necessary to analyze solid residues (ash, brine) and liquid process samples for:

PCBs
Nitroglycerin
Volatile and semivolatile PICs
PCDD/F
TCLP Metals
F^- (Fluoride, soluble)
Cl^- (Chloride, soluble)
PO_4^{-3} (Phosphate, soluble)
Ph (corrosivity)
Reactivity

1.2 *Scope of This Report*

This report presents the test procedures and results for the VX-rocket trial burn (i.e., four test runs) in the DFS at JACADS, as well as the findings from the concomitant evaluation of the associated PAS.

The sampling team included two sampling coordinators and a chemist from SRI and an eight-member sampling crew. The sample analyses for organics and inorganics were performed by SRI in SRI's Birmingham laboratories. METCO Environmental was subcontracted to SRI to perform some of the field activities. Observers were present from the Environmental Protection Agency (EPA), PM Cml Demil, Southwest Research Institute (SwRI), and United Engineers and Constructors (UE&C).

2. SUMMARY OF DATA

2.1 Summary

A summary of the major test results is included in Table 2-1. Tables 2-2 and 2-3 summarize the Method 5 Acid Train (M5AT for acids and particulates) and Method 5 Multiple Metals Train (MMT for metals and particulates) results. Tables 2-4 and 2-5 summarize the Modified Method 5 (MM5 for PCBs and semivolatile PICs) and Sampling Train for Energetic Materials (STEM for energetics) results.

2.1.1 Steady State Operating Conditions

The average temperatures of the kiln exhaust in the four trial burns were 1129, 1212, 1181, and 1074 °F. The average afterburner exhaust temperatures were 2006, 1998, 1998, and 1998 °F.

2.1.2 Destruction of PCBs

The destruction and removal efficiencies (DREs) for PCBs in the four test runs were, respectively, 99.999989%, 99.999987%, 99.999896%, and 99.999971%. Although the DRE for test run 3 was slightly lower than six 9s, the PCB emission rate for this test run was well below the corresponding rates for the three commercially operated PCB incinerators and was also below that for the U.S. Army Chemical Agent Munitions Disposal Facility at Tooele, Utah, as outlined in the JACADS TSCA R&D Permit issued on January 7, 1991.

2.1.3 Nitroglycerin Emissions

The STEM was used to provide data on the performance of the DFS in destroying nitroglycerin. Nitroglycerin is designated as a POHC for the DFS under RCRA. The measured DREs for nitroglycerin for the four test runs were 99.999919%, 99.99884%, 99.99943%, and 99.99962% respectively, all of which met the RCRA requirement for a DRE greater than 99.99%.

2.1.4 Particulate Emissions

Particulate concentrations were, respectively, 1.10, 4.55, 4.38, and 1.51 mg/dscm after correction to 7% O_2. When further corrected to 12% CO_2, these values became 1.19, 4.92, 4.73, and 1.63 mg/dscm respectively (this is not a RCRA requirement but is required as an alternative manner of reporting results by certain state agencies). Each of these concentration values represents the average of two determinations for a given test run, one from the M5AT and one from the MMT. The range of the individual measurements over the four tests was 0.70 to 5.15 mg/dscm when corrected to 7% O_2. The required particulate standard was a concentration limit of 180 mg/dscm when corrected to an oxygen content of 7%. Hence, the DFS easily complied with the limit in all four test runs. The very low particulate concentrations in the stack gases precluded the obtainment of individual particle size measurements for each test run. The particle-size distribution as measured once over all four test runs was found to be bimodal, with about 85% of the particulate matter occurring in a mode centered at about 12 μm.

TABLE 2-1. SUMMARY OF SYSTEM TEST CONDITIONS AND RESULTS

Parameter	Units	Test Run No. 1	No. 2	No. 3	No. 4	Requirement
Feed Rate Set Point[a] (Target, DFS setup)	no./hr	38	38	38	38	
Rocket Feed Rate[b] (PDAR average)	no./hr	30.8	33.1	32.6	30.0	
No. Rockets Fed While Sampling was in Progress[c]		118	131	113	109	
DFS Temperatures	°F					
Retort Burner End		1050	1049	1050	1051	1300 ± 300
Afterburner Exhaust		2006	1998	1998	1998	2000 ± 150
Combustion Efficiency	%	99.97	99.98	99.98	99.97	≥99.9
DRE - PCB	%	99.999989	99.999987	99.999896	99.999971	≥99 9999
DRE - Nitroglycerine	%	99.999919	99.99884	99.99943	99.99962	≥99.99
Particulate Matter corrected to 7% O_2[d]	mg/dscm	1.10	4.55	4.38	1.51	<180
	gr/dscf	0.000485	0.00199	0.00191	0.00066	
HCl Emissions	lb/hr	NA[e]	NA	NA	NA	<4
Stack Dry Gas Flow[f]	dscfm	11493	10919	10598	10684	
Oxygen[g]	%	13.9	13.0	13.2	13.1	
Carbon Dioxide[g]	%	5.6	6.1	5.7	6.1	
Carbon Monoxide[h] corrected to 7%, O_2	ppm	30.0	26.2	20.4	34.5	<100

[a]The DFS operating set point for the rocket feed rate. This rate is the maximum rate that would be achieved under optimum conditions with no feed stoppages.

[b]The PDAR Average Rocket Rate represents the actual steady-state average feed rate when feeding normally.

[c]The total number of rockets fed over the time period(s) during which manual stack sampling took place. Because the manual stack sampling was not shut down immediately when a feed stoppage occurred, the quantities of material fed for DRE calculations could not be calculated directly from the PDAR average rocket feed rate. Therefore the total number of rockets fed while manual sampling took place was taken by direct count.

[d]Average of Acid Train and Multiple Metals Train results.

[e]NA = Not applicable because no HCl was detected.
[f]The flow rate shown is that measured in conjunction with the M5 Acid Train sampling.

[g]Orsat values.

[h]At the afterburn outlet.

TABLE 2-2. SUMMARY OF HCL AND PARTICULATE EMISSIONS AS MEASURED BY THE METHOD 5 ACID TRAIN

Parameter	Units	Run 1	Run 2	Run 3	Run 4
Date	--	3/4/92	3/5/92	3/5/92	3/12/92
Sample Time[a]	minutes	120	120	120	120
Sample Volume	dscf	107.412	98.900	95.153	99.473
Stack Gas Flow Rate	dscfm	11493	10919	10598	10684
Stack Gas Temperature	°F	183	181	181	182
Stack Gas Moisture	% volume	39.5	39.1	39.2	39.0
Percent Isokinetic		101.1	99.7	96.5	98.2
HCl Catch	mg	<1.69	<1.88	<1.95	<1.69
HCl Emission Rate	lb/hr	NA[b]	NA	NA	NA
Part. Catch	mg	2.3	8.3	6.0	1.7
Part. Concentration	7% O_2 mg/dscm	1.50	5.15	3.94	1.07
	12% CO_2 mg/dscm	1.62	5.74	4.39	1.17

[a]Acid Train sampling took place over the first two hours of each 4-hour trial burn.

[b]NA - Not applicable because no HCl was detected.

TABLE 2-3. SUMMARY OF PARTICULATE EMISSIONS AS MEASURED BY THE METHOD 5 MULTIPLE METALS TRAIN

Parameter	Units	Run 1	Run 2	Run 3	Run 4
Date	--	3/4/92	3/5/92	3/5/92	3/12/92
Sample Time*	minutes	72	72	72	72
Sample Volume	dscf	59.712	59.596	57.818	67.943
Stack Gas Flow Rate	dscfm	10413	10672	10420	12028
Stack Gas Temperature	°F	182	182	178	184
Stack Gas Moisture	% volume	39.4	38.8	37.6	39.3
Percent Isokinetic		99.1	96.5	95.9	97.6
Part. Catch	mg	0.6	3.8	4.5	2.1
Particulate Concn.	7% O_2 mg/dscm	0.703	3.96	4.83	1.94
	12% CO_2 mg/dscm	0.760	4.42	5.40	2.18

*The Multiple Metals Train sampling took place during the second two hours of each 4-hour trial burn.

TABLE 2-4. SUMMARY OF PCB EMISSIONS AS MEASURED BY THE MM5 TRAIN SAMPLING AND PCB

Parameter	Units	Run 1	Run 2	Run 3	Run 4
Date	--	3/4/92	3/5/92	3/5/92	3/12/92
Sample Time	minutes	240	240	240	240
Sample Volume	dscf	217.880	217.915	203.299	210.197
Stack Gas Flow Rate	dscfm	12161	11404	11370	11907
Stack Gas Temperature	°F	181	181	180	181
Stack Gas Moisture	% volume	38.5	41.9	37.5	39.0
Percent Isokinetic		95.6	102.0	95.4	94.2
PCB Catch[a]	ng	15.2	22.4	148	38.6
PCB Concentration	mg/dscm	2.46×10^{-8}	3.63×10^{-8}	2.56×10^{-5}	6.49×10^{-8}
PCB Emission Rate	lb/hr	1.12×10^{-7}	1.55×10^{-7}	1.09×10^{-6}	2.89×10^{-7}

[a]Corrected values.

TABLE 2-5. SUMMARY OF NITROGLYCERIN EMISSIONS AS MEASURED BY THE STEM TRAIN

Parameter	Units	Run 1	Run 2	Run 3	Run 4
Date	--	3/4/92	3/5/92	3/5/92	3/12/92
Sample Time	minutes	240	240	240	240
Sample Volume	dscf	223.032	201.924	206.811	216.433
Stack Gas Flow Rate	dscfm	12208	11531	11269	11631
Stack Gas Temperature	°F	181	180	179	183
Stack Gas Moisture	% volume	40.3	39.2	39.4	39.4
Percent Isokinetic		99.6	95.0	100.0	101.4
NG Catch[a]	μg	15.0	229	103	67.6
NG Concentration	mg/dscm	2.37×10^{-3}	4.00×10^{-2}	1.76×10^{-2}	1.10×10^{-2}
NG Emission Rate	lb/hr	1.08×10^{-4}	1.73×10^{-3}	7.41×10^{-4}	4.80×10^{-4}

[a]Upper limit. The detected compound could not be confirmed as being NG by GC/MS.

2.1.5 HCl Emissions

No HCl was detected in the stack gas down to a detection limit of 0.03 lb/hr; note that the detection limit was far below the allowable limit of 4 lb/hr. Moreover, no HF was detected in the stack gas.

2.1.6 Combustion Efficiency

The hourly combustion efficiencies for the four test runs were all greater than or equal to 99.97%. Thus, all were better than the 99.9% minimum that is required for the tests to be valid.

2.1.7 Metals and Anions Analysis in Process Samples

All solid and liquid process samples were analyzed for arsenic, selenium, chromium, cadmium, lead, nickel, tin, thallium, antimony, zinc, cobalt, barium, vanadium, beryllium, copper, silver, and mercury. Those samples listed in Table 2-6 contained metals above regulatory limits. All other metal constituents were below regulatory limits for all samples tested. The process samples were also analyzed for chloride, fluoride, and phosphate. The levels found after the tests were similar in concentration to levels found before the tests. Duplicate analyses indicate the concentrations found before and after the tests are indistinguishable.

2.1.8 Oxygen Concentration

Oxygen concentration in the stack as measured by Orsat was between 13.0% and 13.9%. The average value was 13.3%.

2.1.9 Chemical Agent Concentration

VX was not detected in the stack; (the limit of quantification is 0.000078 mg/m^3). The ACAMS were located at the blower duct and the exhaust stack. Table 2-7 gives the ACAMS quantification limits.

2.1.10 Products of Incomplete Combustion

Volatile PICs (Table 2-8) found during the DFS trial burns were similar in analyte makeup but were generally slightly higher in concentration than those found during previous blank fuel-oil burns conducted on the DFS and LIC in 1989 [Volatile and Semivolatile Emission Test on JACADS Liquid Incinerator System (Blank Fuel Oil Burn) Sept. 29, 1989, Southwest Research Project 01-1301-548]. The aromatic hydrocarbons that were detected, such as benzene, styrene, xylene, toluene and ethylbenzene, are related either to the resins used for sampling or to the fuel used for starting the DFS. In particular styrene and benzene are common Tenax degradation products. The tubes used were prepared and stored properly and used in a timely manner to limit degradation. The trihalomethanes that were found -- chloroform, bromoform, bromodichloromethane, and dibromochloromethane -- are common to many water systems and are consistent with the results of earlier burns. Moreover, 2-

TABLE 2-6. SAMPLES WITH LEAD AND CADMIUM CONCENTRATIONS ABOVE THE REGULATORY LIMIT

Test Run No.	Sample ID	Sample No.	Concentration of lead found, mg/L	Regulatory limit, lead found, mg/L	Concentration of cadmium found, mg/L	Regulatory limit, cadmium found, mg/L
1	Scrubber Brine Pretest	4J-2-14	440	5.0	5.16	1.0
1	Scrubber Brine Post Test	4J-2-45	451	5.0	8.92	1.0
1	Scrubber Liquor Pretest	4J-2-5	16.5	5.0	NA	1.0
1	Scrubber Liquor Post Test	4J-2-33	17.5	5.0	NA	1.0
2	Scrubber Brine Pretest	4J-3-13	427	5.0	6.18	1.0
2	Scrubber Brine Post Test	4J-3-45	670	5.0	6.96	1.0
2	Scrubber Liquor Pretest	4J-3-5	11.0	5.0	NA	1.0
2	Scrubber Liquor Post Test	4J-3-37	15.1	5.0	NA	1.0
3	Scrubber Brine Pretest	4J-4-13	373	5.0	9.12	1.0
3	Scrubber Brine Post Test	4J-4-45	708	5.0	12.2	1.0
3	Scrubber Liquor Pretest	4J-4-5	20.1	5.0	NA	1.0
3	Scrubber Liquor Post Test	4J-4-37	16.9	5.0	NA	1.0
4	Scrubber Brine Pretest	4J-6-14	67.2	5.0	NA	1.0
4	Scrubber Brine Post Test	4J-6-45	126	5.0	NA	1.0
4	Scrubber Liquor Pretest	4J-6-6	6.34	5.0	NA	1.0
4	Scrubber Liquor Post Test	4J-6-38	32.9	5.0	NA	1.0

NA - Below regulatory limits.

TABLE 2-7. ACAMS QUANTITATION LIMITS[a]

	Test Run			
	1	2	3	4
Date	3-4-92	3-5-92	3-5-92 and 3-6-92	3-17-92
DFS Blower Duct				
Station 17 ACAMS 87-07-078	0.18	0.16	0.16	0.26
Stack				
Station 18A ACAMS 90-03-198	0.18	0.18	0.19	0.14
Station 18B ACAMS 88-05-151	0.18	0.21	0.16	0.20

[a]Multiple of ASC (0.0003 mg/m^3).

TABLE 2-8. SYSTEM PERFORMANCE FOR VOLATILE PRODUCTS OF INCOMPLETE COMBUSTION

Emitted substances[b]		Concentration, $\mu g/m^3$[a]			
		Run 1	Run 2	Run 3	Run 4
Products of Incomplete Combustion (PICs)					
Volatile Organics	Benzene	5.0	3.8	5.1	14
	Chloroform	40	3.7	ND[c]	ND
	2-Butanone	100	72	41	150
	Styrene	14	16	20	9.3
	Xylenes	2.1	2.2	2.0	2.2
	Bromoform	5.8	6.2	4.5	17
	Toluene	ND	ND	14	ND
	Chlorobenzene	ND	ND	1.0	ND
	Ethylbenzene	3.3	3.7	3.0	2.2
	Bromodichloromethane	1.5	ND	ND	ND
	Dibromochloromethane	1.0	1.0	ND	0.6

[a]Reported with two significant figures if greater than 1 $\mu g/m^3$ and one significant figure if less than 1 $\mu g/m^3$.
[b]Values corrected.
[c]ND = Not detected. (Detection limit is 0.2 $\mu g/m^3$ for volatile organics).

butanone is a common solvent found in many industrial and laboratory settings, and the low level of chlorobenzene may have been a sample contaminant.

Semivolatile PICs (Table 2-9) consisted primarily of methyl phenols and phthalates and were previously found at similar levels during blank fuel-oil burns conducted on the DFS and LIC systems during 1989. The benzyl alcohol, benzoic acid, and naphthalene that were found were expected as degradation products of the resin used for sampling. Even when used quickly these polymers form some products that are either trapped deep in the polymer beds or released by equilibrium processes.

All compounds that were found were related to the fuel oil used to fire the system or were related to laboratory operations and were thus entirely consistent in character and concentration with the gases and vapors that are emitted during any other typical fossil-fuel combustion operation.

2.1.11 Dioxin/Furan

Dioxins and furans (Table 2-10) were found in the DFS stack emissions during the trial burn at levels that were not far above the applicable analytical instrument quantitation limits; that is, the emitted concentrations of PCDD/F from the DFS ranged from 0.0035 to 0.16 ng/m^3. No 2,3,7,8 TCDD or TCDF was found in these tests. But previous studies of municipal incinerators have demonstrated emissions of dioxins in the 50- to 7000-ng/m^3 range. Moreover, conversations with EPA personnel involved in the assessment of incinerator performance with regard to dioxin/furan emissions suggest that a level of 10 ng/m^3 should not cause concern.

The pattern of the dioxin/furan emissions displays a steadily downward trend from 0.16 to 0.0035 ng/m^3 across Runs 1, 2, 3, and 4. Indeed, the lowest dioxin/furan levels that were observed in this study (0.0035 ng/m^3) approached the quantification limit of the analytical method.

2.1.12 Metals

Metals emissions (Table 2-11) from the DFS were limited to the analytes that were expected (Cu, Cr, Cd, B, Sn, Hg, Zn, Co, Be, Pb, P, Ni, Mn) given the acidic gas stream and the duct composition. But the concentrations of these substances were well below the corresponding guidance limits (Guidance on Metals and Hydrogen Chloride for Hazardous Waste Incinerators. Vol. IV of the Hazardous Waste Incineration Guidance Series, Draft, March 1989, USEPA-OSW).

2.1.13 Total Hydrocarbons

The average total hydrocarbon concentration as measured using EPA Method 25A expressed as propane was 7 ppm or less for each test run.

TABLE 2-9. SYSTEM PERFORMANCE FOR SEMIVOLATILE PRODUCTS OF INCOMPLETE COMBUSTION

Emitted substances[b]		Concentration, $\mu g/m^3$[a]			
		Run 1	Run 2	Run 3	Run 4
Semivolatile Organics	2-Methylphenol	20	28	13	ND[c]
	4-Methylphenol	18	23	10	ND
	Dimethyl phthalate	73	60	58	41
	Diethyl phthalate	ND	1.2	ND	ND
	Di-n-butyl phthalate	ND	ND	1.8	ND
	bis(2-Ethylhexyl)-phthalate	12	7.0	4.4	12
	Benzyl alcohol	340	94	ND	1.2
	Benzoic acid	100	5.7	13	ND
	Naphthalene	ND	ND	2.9	ND

[a]Reported with two significant figures if greater than 1 $\mu g/m^3$ and one significant figure if less than 1 $\mu g/m^3$.
[b]Values corrected.
[c]ND = Not detected. (Detection limit is 2.8 $\mu g/m^3$ for semivolatile organics).

TABLE 2-10. SYSTEM PERFORMANCE FOR POLYCHLORINATED DIBENZO-P-DIOXINS AND DIBENZOFURANS

Emitted substances[b]		Concentration, $\mu g/m^3$[a]			
		TR 1	TR 2	TR 3	TR 4
PCDD/F	Tetra CDF	9.7×10^{-6}	ND[c]	3.5×10^{-6}	ND
	Tetra CDD	ND	1.6×10^{-5}	5.2×10^{-6}	6.7×10^{-6}
	Penta CDF	1.3×10^{-4}	ND	ND	ND
	Penta CDD	2.8×10^{-5}	ND	ND	ND
	Hexa CDF	1.6×10^{-4}	2.6×10^{-5}	ND	ND
	Hexa CDD	9.1×10^{-5}	3.6×10^{-5}	ND	ND
	Hepta CDF	7.0×10^{-5}	4.9×10^{-5}	ND	ND
	Hepta CDD	1.2×10^{-4}	5.8×10^{-5}	ND	ND
	Octa CDF	ND	ND	ND	ND
	Octa CDD	1.6×10^{-4}	7.3×10^{-5}	7.0×10^{-5}	ND

[a]Reported with two significant figures if greater than 1 $\mu g/m^3$ and one significant figure if less than 1 $\mu g/m^3$.
[b]Values corrected.
[c]ND - Not detected. (detection limits are 3×10^{-6} $\mu g/m^3$ for Tetra CDD/CDF; 1.6×10^{-5} $\mu g/m^3$ for Penta through Hepta CDD/CDF; and 3×10^{-5} $\mu g/m^3$ for Octa CDD).

TABLE 2-11. SYSTEM PERFORMANCE FOR METALS

Emitted substances[b]		Concentration, $\mu g/m^3$[a]			
		Run 1	Run 2	Run 3	Run 4
Metals	Chromium	6.3	2.8	3.2	0.3
	Cadmium	2.9	1.3	1.0	1.1
	Lead	55	48	34	52
	Beryllium	0.7	ND[c]	ND	ND
	Boron	4.4	250	260	10
	Phosphorous (as P)	53	120	140	23
	Zinc	130	41	73	28
	Nickel	4.7	2.0	2.1	ND
	Manganese	250	710	92	220
	Tin	17	18	17	14
	Cobalt	ND	1.2	ND	ND
	Copper	8.3	1.0	3.9	3.8
	Mercury	0.1	0.1	0.2	0.4

[a]Reported with two significant figures if greater than 1 $\mu g/m^3$ and one significant figure if less than 1 $\mu g/m^3$.
[b]Values corrected.
[c]ND = Not detected. (Detection limits are 0.3 $\mu g/m^3$ for Be; 1.8 $\mu g/m^3$ for Ni; 1.2 $\mu g/m^3$ for Co).

2.2 Quality Assurance/Quality Control

All data were judged to be representative based on the quality control data obtained. This quality control data included analyte recoveries, train performance, sample tracking and custody documentation. Details can be found in Section 6 and in the appendices. All samples that were successfully collected were analyzed, and no losses were experienced in custody transfer, shipping, laboratory preparation, or analysis.

Recoveries of surrogate spikes and matrix spikes typically were within the expected ranges. In instances where a spike was outside the recommended range, an evaluation of other quality control data pertinent to the sample analysis invariably affirmed that the data were of acceptable quality. The following conclusions concerning data quality can be drawn for the analyte groups within the various matrices:

- Volatile, semivolatile, PCB, and PCDD/F surrogate recoveries were within method limits.

- The results for volatile and semivolatile organic-compound matrix spikes for the incinerator-process samples were generally within the method advisory limits. Some recoveries outside the advisory limits were observed in the semivolatile analyses and were probably a result of matrix effects. PCDD/F matrix-spike results for the incinerator process samples were within applicable method limits.

- Instrument tuning, calibration, and internal-standard recoveries met criteria for all volatile and semivolatile assays.

- HCl recoveries from matrix spikes and blind field spikes were all within the acceptable limits of the applicable methods.

- Metal matrix spike and duplicate samples were within acceptable limits established by the applicable methods for most inorganics in most samples. As anticipated, samples that contained chloride gave low recovery of silver, and the 18% caustic samples gave low recovery for all metals. Barium gave poor recoveries from some samples. Samples that contain sulfate will cause barium to precipitate and not be recovered.

3. TEST FACILITY DESCRIPTION

3.1 JACADS Description

Figure 3-1 shows the location of Johnston Atoll in the central Pacific Ocean. This atoll is quite isolated from populated islands in the region. It is about 825 miles southwest of the Hawaiian Islands, 900 miles northwest of Palmyra Island, 1350 miles north of Howland Island, and 940 miles southeast of Midway Island. The closest land to Johnston Atoll is the French Frigate Shoals, about 530 miles away. Figure 3-2 illustrates the general layout of Johnston Island, the principal island of four on the atoll. All four of the islands are wholly or largely manmade, with Johnston Island being about 2 miles long by 1/2 mile wide. The DFS is contained within the JACADS facility area shown in Figure 3-2.

The overall JACADS treatment process is based on the destruction of toxic agents by incineration. The munitions-processing step includes the initial removal of explosives and draining of the toxic agent. The DFS then incinerates or thermally decontaminates drained rockets and mines, explosives and propellants removed from cartridges and projectiles. The MPF, on the other hand, thermally decontaminates all drained ton containers and drained munitions (with their explosives and propellants removed) other than rockets and mines. The drained toxic agents are burned in the LIC, along with spent agent-decontamination solution. The DUN burns contaminated and uncontaminated dunnage.

Flue gases from the DFS, the MPF, and the LIC are scrubbed by a PAS. Each of these incinerators has its own PAS. The DUN has a dry flue-gas cleaning system, but the other systems are wet. The scrubber liquid from the wet scrubbers is pumped to the Brine Reduction Area to produce a dry salt.

3.2 DFS Description

The DFS consists of the kiln, the afterburner (AB), and the PAS. Figure 3-3 provides an illustration of the complete system. Operators transport the rockets from storage, unpack them, and load them onto a conveyor system leading to the Explosive Containment Room (ECR). Instruments then control the operations in the ECR automatically. In the ECR, a punch unit pierces each warhead, thereby draining and removing at least 95% of the chemical agent. A shearing apparatus then cuts the rocket into eight pieces. A chute carries the pieces to the kiln, through which they pass countercurrent or opposite to the flow of hot gases and then exit through a heated-discharge conveyor (HDC).

Combustion gases pass through a Blast Attenuation Duct and into the cyclone, where large particles are separated from the gas stream. The gas stream continues on through a slagging afterburner and a quench system and is then cleansed by use of a venturi scrubber and a packed-bed scrubber. Finally, the gases are routed through a fiber mist eliminator before being discharged.

DATE: 3/1/90
REVISION : NO. 7

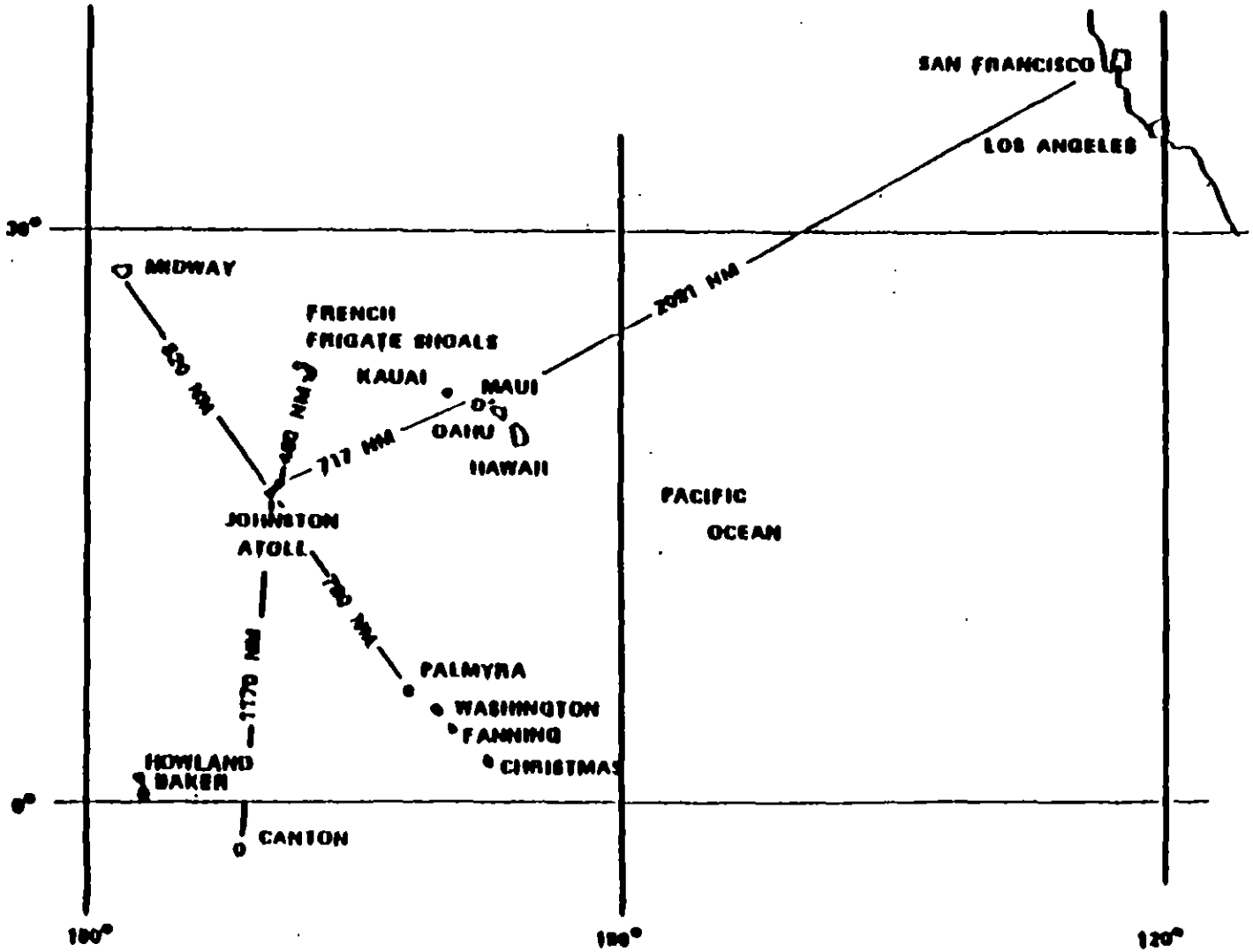

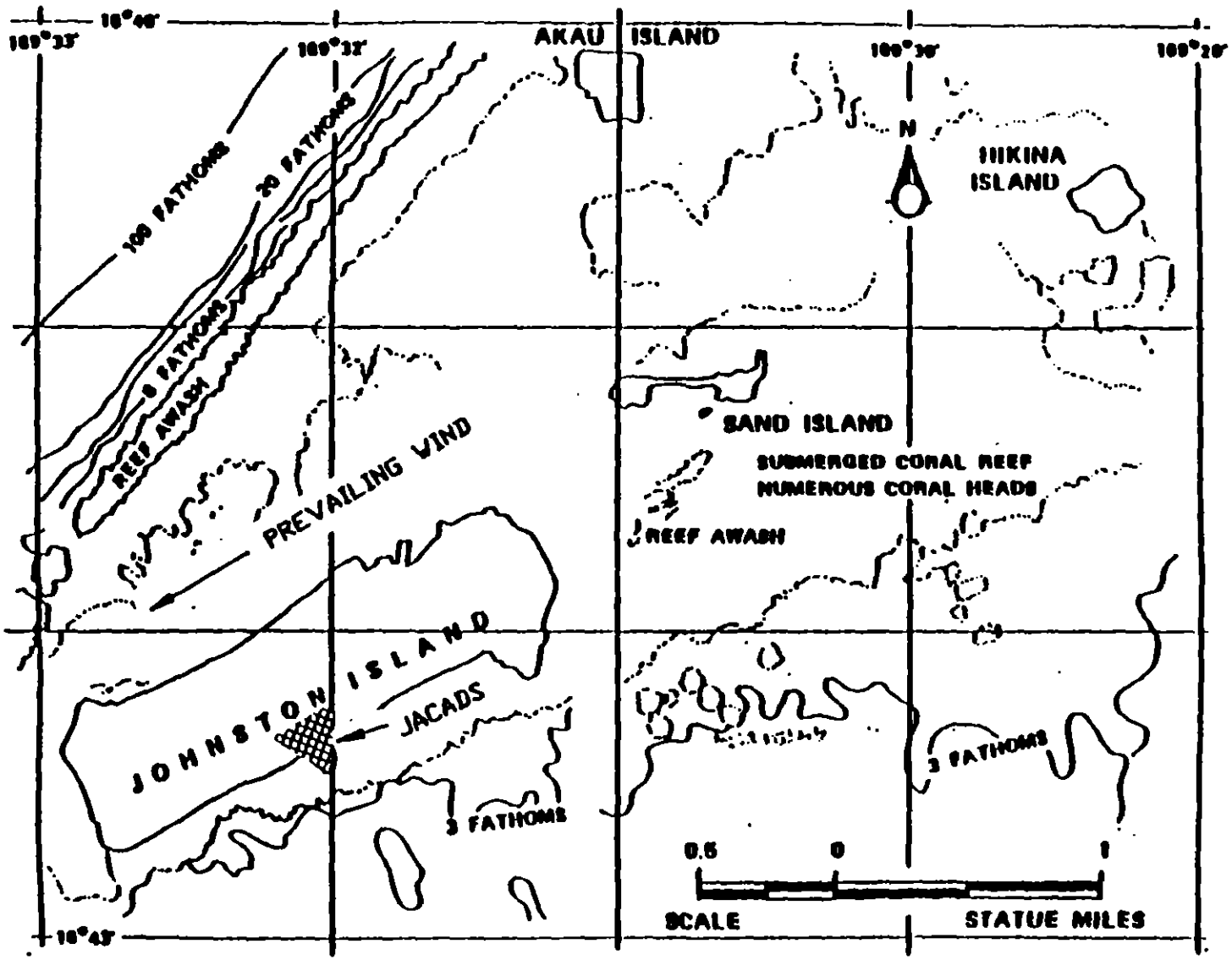

Figure 3-2. MAP OF JOHNSTON ATOLL

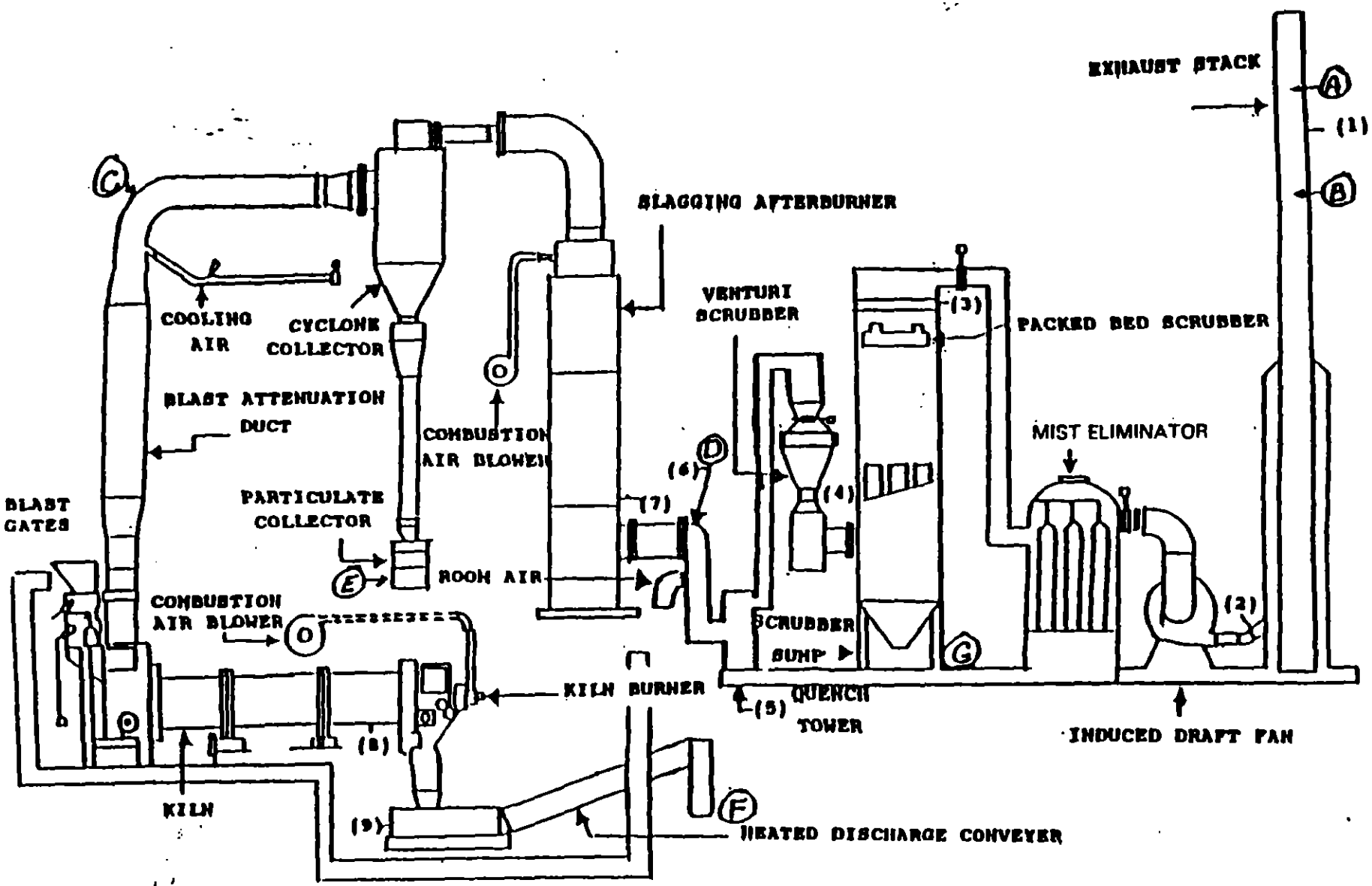

Figure 3-3. Illustration of DFS and Sample Point Locations

The DFS is a rotary kiln with the burner that is rated at one to four million BTU/hr located at the rocket-segment exit. Fugitive gaseous emissions are controlled by operating the furnace at a negative pressure, i.e., at a pressure lower than that of the surrounding atmosphere. The kiln rotates at 0.5 to 2 rpm. Solids are retained in the kiln for about 12 min and for an additional 15 min in the HDC. The kiln and conveyor operate at temperatures no lower than 1000 °F. Dimensions of the retort are 5 ft (diameter) by 30 ft (length).

A sealed drum below the cyclone collects the coarse particulate matter, primarily fiberglass.

The afterburner, with a retention time of 0.75 sec, operates at 2000 °F. The quench tower reduces exhaust gases to less than 200 °F, whereas the venturi scrubber removes particles. A single closed-loop brine system serves both the quench tower and the venturi scrubber. A packed-bed scrubber removes acidic gases, while a controller unit in the closed-loop system maintains the pH of the liquid at about 8.

These and other relevant details concerning the DFS and the agent rockets have been filed with EPA Headquarters in Washington, D.C., in the application and demonstration plan for permit approval dated January 1989.

Combustion gases from the slagging afterburner pass through a PAS for discharge to the atmosphere. This PAS is illustrated in Figure 3-4.

A general description of the PAS subsystems and their functions is provided below:

(a) The quench tower cools the exhaust gases before they enter the venturi scrubber. Scrubber brine from the packed-tower sump is sprayed into the quench tower to reduce the temperature of the flue gas. The operating parameters pertaining to the quench tower that are monitored during routine operations are:

inlet-gas temperature
brine flow rate
exhaust-gas temperature

(b) The venturi scrubber is a variable-plug throat design. Scrubber brine from the packed-tower sump is injected into the top of the venturi. Brine droplets formed in the venturi collect particulate matter principally by collision, and neutral salts are formed from acid gases such as HCl and HF by reaction with the caustic in the brine. The venturi scrubber is designed to remove 95% of all particles larger than 0.5 μm. The parameters monitored at the venturi are:

brine flow rate
pressure drop

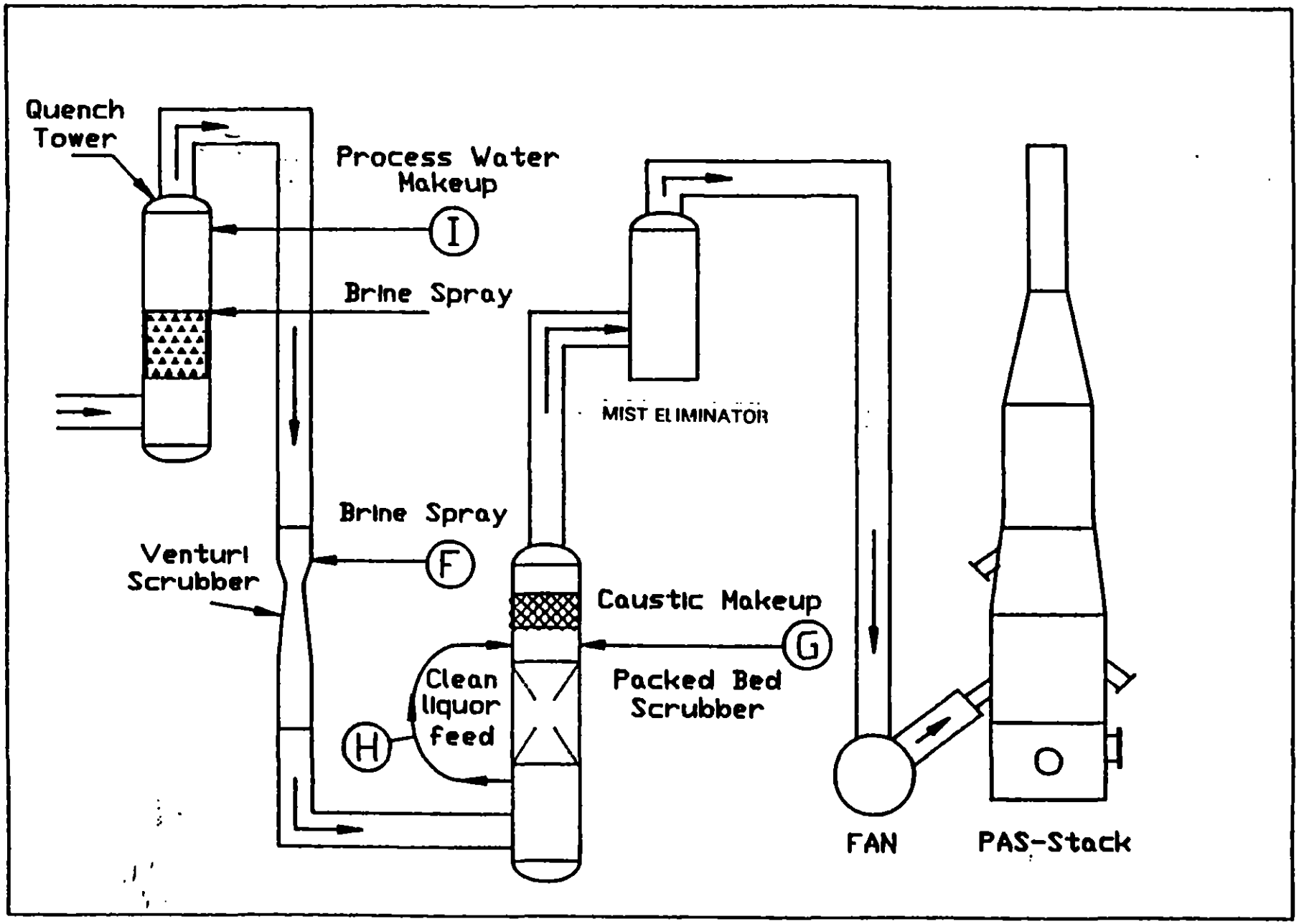

Figure 3-4. Process Diagram and Sampling Points for Pollution Abatement System (PAS)

(c) The packed-bed scrubber tower is designed to remove at least 95% of the emitted sulfur dioxide. Clear liquor is used to irrigate the packed-bed section of the tower, and acid-gas removal is effected in the packed bed by reaction of the acidic gases with caustic in the clear liquor. The bulk of the liquid that is circulated through the packed-bed scrubber is removed by an entrainment separator located at the exit of the tower. The parameters that are monitored for the packed-bed are:

liquor flow rate
liquor pH
liquor density
pressure drop

(d) The mist eliminators remove liquid carryover from the packed bed. They also remove the fine H_3PO_4 mist that is formed when gas laden with P_2O_5 is cooled with water. The P_2O_5 is produced by the incineration of chemical agents VX or GB. The pressure drop across the demisters is continuously monitored.

(e) The induced-draft fan moves the exhaust gases through the PAS. Dampers control the flow to maintain a negative pressure in the DFS. The electrical current drawn by the fan is monitored continuously.

(f) A 100-ft stack serves to exhaust the clean gases to the atmosphere. This stack is of varying diameter due to its function as the end system for three of the four incinerators/kilns (i.e., the DFS, the LIC, and the MPF). Figure 3-5, taken from "RCRA Part B Permit for the Johnston Atoll Chemical Agent Disposal System Vol II Attachment D, Trial Burn Plans", illustrates the stack, and the numbers on the figure indicate the sampling locations described in Table 3-1. The stack parameters that are monitored continuously are NO_x and chemical agents. Total hydrocarbon emissions were also monitored continuously throughout these tests. No SO_2 was monitored during these tests.

The DFS waste streams include the stack exhaust gas, the scrubber brines, and solid residues from the HDC and cyclone. The scrubber brines are moved through a holding tank before they are processed in moisture-removal and salt-drumming operations. The salts are generated on a periodic basis and are drummed for appropriate disposal.

3.3. Description of M55 Rockets

The DFS was designed to incinerate chemical-agent munitions. One of the items to be processed in the DFS is the M55 rocket, shown in Figure 3-6. The rocket, without being removed from its M441 S/F tube, is drained of agent and is sheared into several (8) smaller pieces before it is fed to the DFS. The complete rocket assembly, including the S/F tube, is then burned in the DFS.

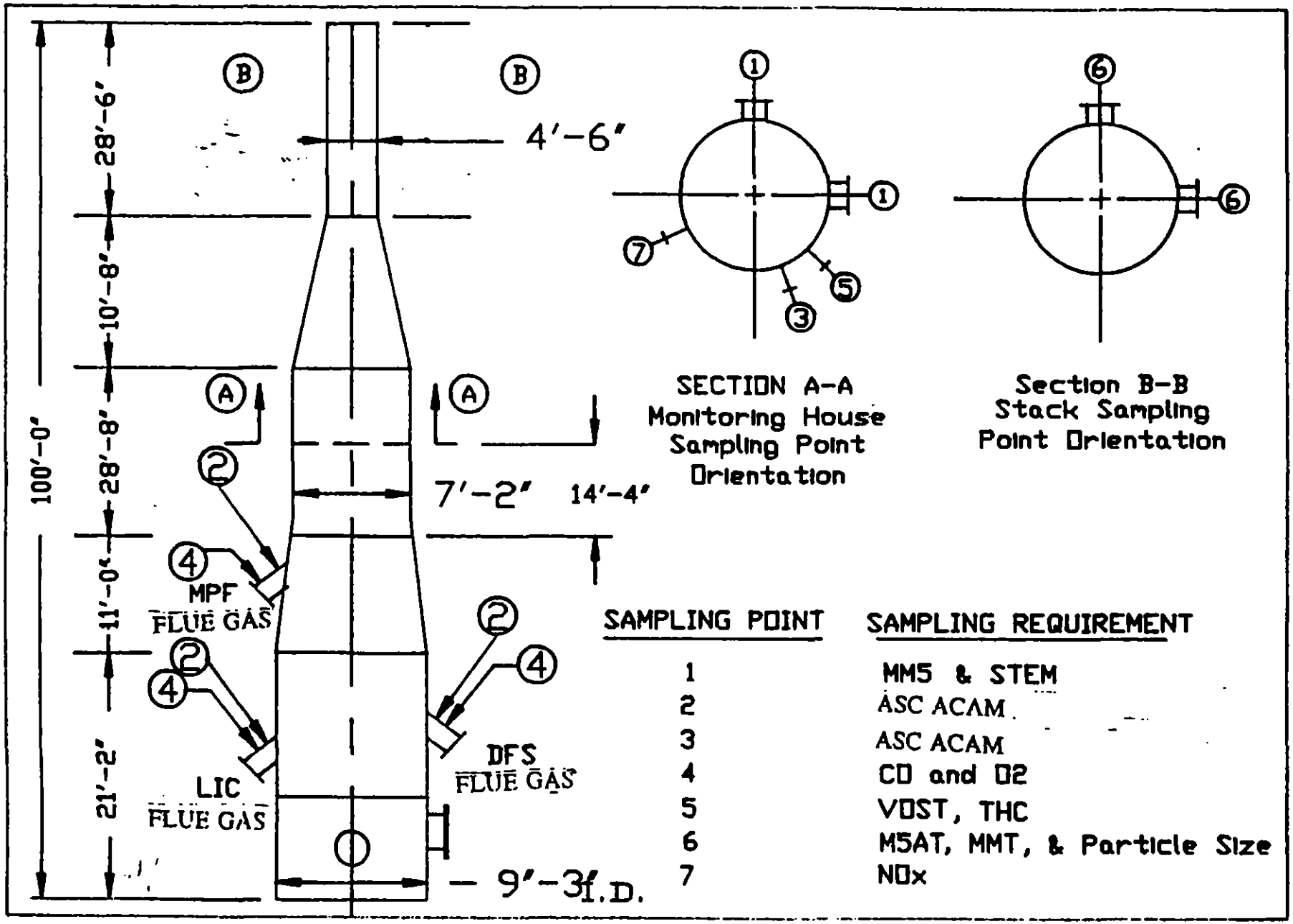

Figure 3-5. MPF, DFS, AND LIC STACK SAMPLE POINT LOCATIONS

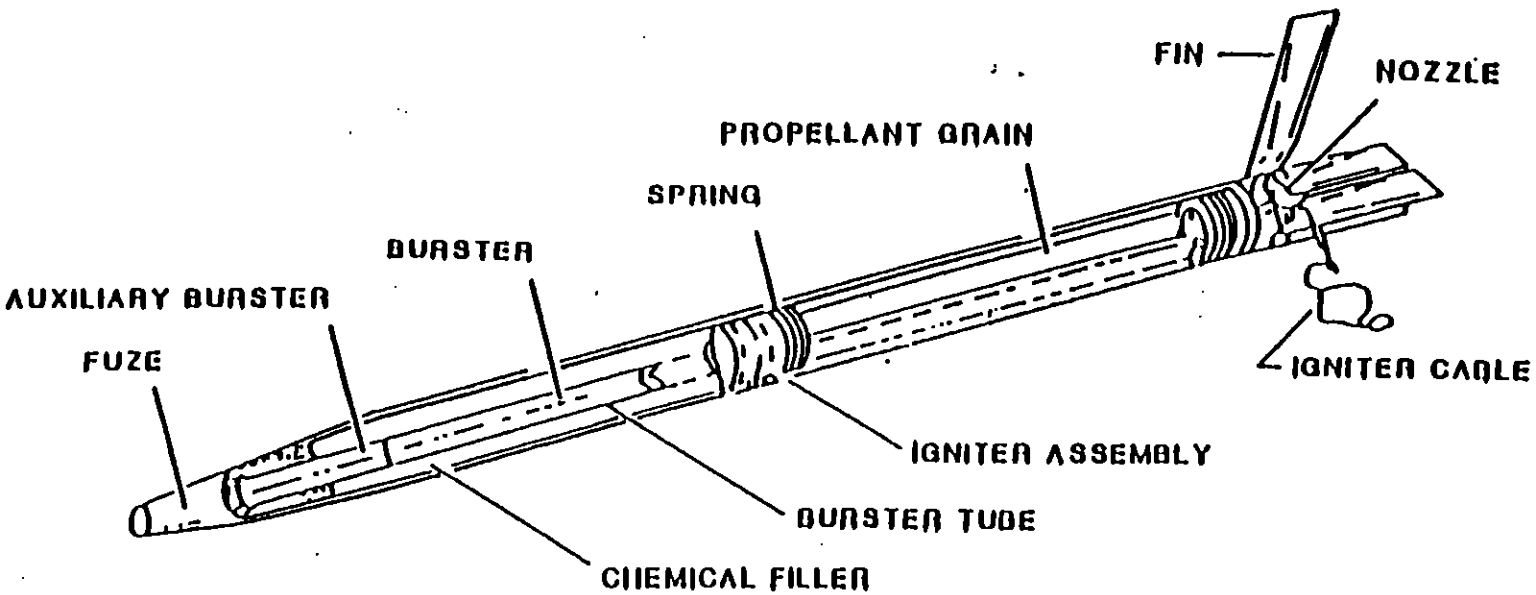

LENGTH	78.0in	EXPLOSIVE	Comp B
DIAMETER	116mm	EXPLOSIVE WT.	3.2LB.
TOTAL WT.	68LBS. (67LBS.)	PROPELLANT	M28
AGENT	GB (VX)	PROPELLANT WT.	19.3
AGENT WT.	10.7LBS (10.0LBS.)	PRIMER	M62
FUZE	M417	OD/SCG	6A
BURSTER	M34,M36	PACKAGING	15 Rounds/Wooden Pallet

Figure 3-6. M55 Rocket Cut-Away

TABLE 3-1. DFS SAMPLING LOCATIONS

Site from Figure 3-5	Location on Figure 3-4 and Figure 3-5	Matrix	Sampling Method
B	Stack Platform	Stack Exhaust	M5 Acid train Particulate M5 Metals train Particle Size
A	Common House	Stack Exhaust	ACAMS Modified M5 VOST CEM STEM NOX THC (25A)
2	DFS	Blower Duct Exhaust	ACAMS
4	DFS	Blower Duct Exhaust	CEM
Not in figure	Collector	Cyclone Ash	Grab total contents of hopper
Not in figure	DFS	Kiln Exhaust	CEM
Not in figure	DFS	Afterburner Exhaust	CEM
Not in figure	Waste Bins	HDC Residue	Grab
Not in figure	Valve in Brine supply pump exit line, DFS valve 555	Brine	Grab
Not in figure	Caustic Makeup DFS valve 302	Caustic	Grab
Not in figure	Valve in Liquor supply pump exit line, DFS valve 557	Scrubber Liquor	Grab
Not in figure	Process Water DFS valve 629	Water	Grab
Not in figure	Fuel Oil DFS valve 316	Fuel Oil	Grab

3.3.1. · Total Amount/Feed Rate

3.3.1.1 Analysis of M55 Rockets

During an assessment of the M55 rocket stockpile, some of the S/F tubes were found to contain the Aroclor® 1254 mixture of PCBs. But, based on this analysis of chopped fiberglass M441 S/F tubes, it can be stated with 95% confidence that at least 94.9% of these tubes contain PCBs at concentrations less than 50 ppm. For the matted fiberglass M441 tubes, approximately 40% of the samples contain PCBs at less than 50 ppm, whereas approximately 60% contain PCBs at concentrations greater than 2,000 ppm. For the population of S/F tubes with greater than 2,000 ppm PCBs, the mean PCB concentration is 3,400 ppm. Although 0.6% of the M55 rocket stockpile has been sampled, the majority of these samples originated from six rocket lots within the stockpile. The PCB level that was assumed to be present in the feed for the trial burns, based on the aforementioned analyses, was 2700 ppm (U.S. Army Environmental Hygiene Agency, report, Phase 2 Hazardous Waste Study No. 37-26-1345-86, Assessment of the Occupational Health, Environmental and Regulatory Impact of PCBs Contained in the M441 Shipping and Firing Tube, and the JACADS R and D permit).

3.3.1.2 Feed Rate

The maximum design rate of the Deactivation Furnace System (DFS) is approximately forty-six rockets per hour. The feed rate of M55 rockets is controlled by the steady-state operation of the Rocket Shear Machine (RSM) and the DFS. For this trial burn the DFS was set up to operate at a maximum steady state feed rate of 38 rockets per hour if optimum system operation was maintained. The actual average rocket feed rates as recorded by the PDAR system were between 30 and 33 rockets per hour. The PDAR average feed rate is the actual steady state feed rate achieved during normal operations.

3.3.2 Physical Description of the M441 Shipping and Firing Tube

Each rocket is packaged in an M441 fiberglass S/F tube. The S/F tube comprises a fiberglass base and a grey-pigmented polyester resin which has been laminated at low pressure. The coating of paint on the outside of the tube, as well as the resin pigment, is acrylic. Two categories of S/F tubes can be distinguished on the basis of fabrication materials: chopped fiberglass with an outside coating, and matted fiberglass with an outside coating. A visual inspection is sufficient to discern the type of S/F tube.

The S/F tube is 82 in. long by 4.9 in. OD. The wall thickness of the tube varies between 0.100 and 0.165 in. The tube weighs 13.73 lbs and, once the rocket is inserted, is closed on both ends with aluminum caps weighing approximately 1 lb each.

3.3.3 Description of the Rocket Motor

The M-62 rocket-motor igniter contains 385 grains of a mixture consisting of 49% magnesium, 49% potassium perchlorate, and 2% cellulose nitrate-camphor. The rocket motor itself contains 134,750 grains (19.25 lbs) of M-28 propellant, which is 60% nitrocellulose, 23.8% nitroglycerin, 9.9% triacetin, 2.6% diethylphthalate, 2.0% lead styphnate, and 1.7% 2-nitrodiphenylamine.

3.4 Sampling Locations

A summary of the sampling locations and sample types is given in Table 3-1. The sampling location for the MM5 and STEM was approximately 52 ft above the ground. The sampling ports were located 13 ft (1.81 stack diameters) downstream from a constriction in the stack and 19 ft 5 in. (2.71 stack diameters) upstream from a constriction in the stack. The stack-sampling location for the M5AT and M5MMT was 86 ft above ground. The sampling ports are located 13 feet (2.90 stack diameters) downstream from a constriction in the stack and 14 feet 1/2 inch (3.13 stack diameters) upstream from the outlet of the stack. Because of the close proximity of flow disturbances to the sampling levels, the sampling traverses were made with the maximum number of points (24) called for by the EPA methods. The locations of the points that were used are detailed in Tables 3-2 and 3-3.

3.5 Facility Instrumentation

The JACADS DFS includes several continuous gas-emission monitors (CEMs) and a PDAR system. Specifically, there are O_2 monitors at the exhaust of the kiln, at the exhaust of the afterburner, and at the stack. Moreover, CO monitors are located at the afterburner and stack, and a CO_2 monitor is located at the exit of the afterburner. In addition, ACAMS units are located at the DFS fan outlet and at the stack to provide agent-concentration data and rapid warning of detectable agent in the flue gases. Table 3-4 provides a general summary of the CEM characteristics and specifications for the DFS.

Process data is logged by the PDAR system continuously throughout all operations of the JACADS facility. Data are taken at approximately 1-sec intervals and averaged over a time span of 1 min prior to reporting conditions or updating real-time displays.

TABLE 3-2. LOCATION OF SAMPLING POINTS FOR METHOD 5 ACID TRAIN, MULTIPLE METALS TRAIN, AND PARTICLE SIZING

Point Number	Percent of Diameter from Wall	Distance from Wall, in.
1	2.1	1 1/8
2	6.7	3 5/8
3	11.8	6 3/8
4	17.7	9 9/16
5	25.0	13 1/2
6	35.6	19 3/16
7	64.4	34 11/16
8	75.0	40 3/8
9	82.3	44 5/16
10	88.2	47 1/2
11	93.3	50 1/4
12	97.9	52 3/4

The sampling ports are located 13 feet (2.90 stack diameters) downstream from a constriction in the stack and 14 feet 1/2 inch (3.13 stack diameters) upstream from the outlet of the stack. The locations of the sampling points were calculated as follows:

Port and Wall Thickness = 4 1/8 inches

Inside Stack Diameter = 53 7/8 inches

TABLE 3-3. LOCATION OF SAMPLING POINTS FOR MM-5 TRAIN AND STEM

Point Number	Percent of Diameter from Wall	Distance from Wall, in.
1	2.1	1 13/16
2	6.7	5 3/4
3	11.8	10 3/16
4	17.7	15 1/4
5	25.0	21 9/16
6	35.6	30 11/16
7	64.4	55 7/16
8	75.0	64 9/16
9	82.3	70 7/8
10	88.2	75 15/16
11	93.3	80 3/8
12	97.9	84 5/16

The sampling ports are located 13 feet (1.81 stack diameters) downstream from a constriction in the stack and 19 feet 5 inches (2.71 stack diameters) upstream of a second constriction in the stack. The locations of the sampling points were calculated as follows:

Port and Wall Thickness = 8 13/16 inches

Inside Stack Diameter = 86 1/8 inches

TABLE 3-4. FACILITIES EMISSIONS MONITORING INSTRUMENTAITON

Parameter	Model & Type of Instrument	Sampling Location	Type of Output	Design Range	Operating Range	Accuracy	Precision
Oxygen	Thermox Model LS Electrochemical analyzer	Exhaust Stack Primary Outlet Secondary Outlet	4 to 20 ma	0 to 25% Oxygen in Exhaust Gases	0 to 25% Oxygen in Exhaust Gases	0.1%	0.5%
Carbon Monoxide	Anarad Model AR-50R NDIR	Exhaust Stack Secondary Outlet	4 to 20 ma	0 to 500 ppm in Exhaust gases	0 to 500 ppm in Exhaust gases	±1% of full scale	±1% of full scale
VX	ACAMS Gas Chromatography	Exhaust Blower Duct	0 to 10 volt	0.00001 to 1 mg/m^3	to ASC (0.0003 mg/m^3)	±25%	±25%
CO_2	Anarad	Secondary Outlet	4 to 20 ma	0 to 25%	0 to 25%	0.1%	0.5%
NO_x	Teco	Exhaust Stack	0 to 10 volt	0 to 500 ppm	0 to 500 ppm	±1%	±1%

4. TEST PROCEDURES

4.1 Preparation for Testing

All equipment and instruments were calibrated as required and were in good operating order prior to the start of the test. The sample feed to the DFS, consisted of drained M55 rockets.

The rotary kiln and PAS operating criteria were as follows:

Kiln rotational speed	Approximately 2 rpm
Burner end kiln gas temperature	1300 ± 300 °F
Afterburner temperature	2000 ± 150 °F
Carbon monoxide (corrected to 7% O_2)	≤100 ppm hourly avg.
Carbon monoxide (corrected to 7% O_2)	200 ppm peak
Scrubber liquid flow	≥395 gpm
Packed-bed delta P	1 - 10 in. H_2O
Venturi delta P	5 - 50 in. H_2O
Kiln pressure	0.5 inches w.c. relative to room
Cyclone delta P	≥0.1 in. H_2O
Scrubber Ph	≥7

4.2 Continuous Monitoring Methods

4.2.1 Continuous Emission Monitors

CEMs are used at JACADS to determine CO, O_2, CO_2, and NO_x. The monitors are checked for drift and span every 24 hr. The daily checks for the four test runs are included in Appendix E.

4.2.2 Chemical Agent Monitors

The ACAMS was used to monitor for VX vapor in stack gases. The ACAMS is capable of providing near-real-time monitoring for trace quantities of military chemical agents. Essentially, the ACAMS is a gas chromatograph (GC) that has been equipped with a solid-sorbent sample-collection device and with the circuitry, hardware, and software to permit it to collect and analyze samples automatically. The ACAMS is equipped with a fused-silica GC column, a flame-photometric detector (FPD), a sampling pump, and a small tube packed with a solid-sorbent material. ACAMS units used for stack sampling are interfaced with stack-sampling devices that enable them to sample humid stack gases. Three ACAMS were used to monitor the stack. These are located at the blower (1 ACAMS) and the exhaust (2 ACAMS, one operated at a time with the other as a standby system). The ACAMS operates in cycles of fixed duration that contain predetermined periods for the collection and the analysis of samples. Functions such as the flow rates of operating gases and the column-oven temperatures are also predetermined and controlled by appropriate software.

Because agent VX strongly adheres to almost all surfaces, it is routinely collected and determined as its G-Analog (ethyl methylphosphonofluoridate). The conversion of VX to its G-Analog is accomplished by passing the sample air (stack gas) through an AgF-impregnated polyester pad -- the V-to-G conversion filter -- that is affixed to the inlet of the sampling line.

During the DFS trial burns, the ACAMS was calibrated and challenged by injecting known amounts of VX onto a V-to-G conversion filter affixed to the sampling system and allowing the instrument to complete its sampling/analysis cycle. Instrument responses are displayed on a Gas Plasma Display (GPD) screen on the front of the instrument, on a strip-chart recorder that is part of the ACAMS unit, and in the JACADS control room.

The ACAMS units are calibrated at a minimum of every 30 days. The instrument is calibrated to the ASC (0.0003 mg/m^3) and set to alarm at 0.7 ASC. An additional calibration challenge is performed every 4 hr during operation, and set-points are recalibrated if necessary. ACAMS calibration and challenge data for the DFS trial burns are included in Appendix E.

4.3 Manual Sample-Collection Methods

Sampling was performed according to the "Sampling and Analytical Protocol for the Resource Conservation and Recovery Act (RCRA) Trial Burns and the Toxic Substance Control Act (TSCA) Demonstration Test Burn at JACADS" (included as Appendix G). A brief description of the methodology that was employed and the samples that were generated is presented within this section. Unless it is noted otherwise, samples were collected in accordance with the protocol.

4.3.1 Modified Method Five (MM5)

Method 0010 from SW846 was used to collect samples for determinations of PCBs, semivolatile PICs, and PCDD/F.

All train glassware was cleaned with a 1:1 solution of methanol/methylene chloride prior to use. The MM5 train was set up to collect 140 ft^3 of stack gas over a 4-hr period. A minimum volume of 105 ft^3 is required by the cited method, but a volume of about 220 ft^3 was collected during the DFS burns to enhance sensitivity. During sample recovery, all glassware prior to the solid sorbent was rinsed first with toluene, then with methanol/methylene chloride to generate two separate rinse samples. The filter, sorbent, and condensate were then collected, resulting in a total of five fractions for analysis.

4.3.2 Sampling Train for Energetic Materials (STEM)

The STEM was employed to collect samples for determining levels of nitroglycerin in the DFS stack emissions. The train is similar to the MM5 train and uses XAD-2 resin packed in sections in the trap to allow for individual extraction of each XAD-2 section. The XAD-2 sections were

extracted at JACADS within 24 hours of collection and the extracts sent to SRI for analysis.

4.3.3 Volatile Organic Sampling Train (VOST)

Method 0030 from SW846 was used to collect samples for volatile organic compound assay. All of the sorbent tubes and the condensate samples were recovered from the VOST system for laboratory analysis. Several sorbent tubes were included as blank samples for each of the four test runs. Each run provided four pairs of stack-sample sorbent tubes, each pair representing approximately 20 L of stack gas. The method employed the slow VOST (0.5 L/m). No samples were taken during port change.

4.3.4 Method Five Acid Train (M5AT)

Method 0050 of SW846 was used in the collection of samples for the determination of acid gases and particulates. A minimum sample volume of 30 ft^3 was required. Actual sample volumes were approximately 95 to 107 ft^3. Recovery of the probe wash, the filter, the two acidic and two caustic impingers generated six samples for analysis.

4.3.5 Multiple Metals Train (MMT)

Collection of samples for the determination of metal analytes and particulates was carried out with a Method 5 train equipped with additional impingers containing appropriate scrubbing solutions. A minimum sample volume of 30 ft^3 was required; however, to enhance sensitivity, samples of approximately 60 ft^3 were collected during the DFS testing. The resulting nine train fractions were submitted to the laboratory for analysis.

4.3.6 Particle Size Distribution

Particle-size distribution measurements were made of the particulate matter in the DFS stack gas with the use of University of Washington (Pilat) Mark V/III cascade impactors. The impactors were fitted with SoRI/EPA Right-Angle Precollectors and were operated in situ. The impactor was configured for these tests to provide data in seven size fractions with stage cut sizes ranging from about 0.4 to about 12 μm. The sampling time for each sample was split evenly between two locations in the stack. Each of the two locations in the duct was selected to have a gas velocity equal to the average gas velocity in the duct. Sampling was done at a fixed flow rate for each sample and with the sampling flow rate and nozzle size selected to provide isokinetic conditions if the stack-gas flow did not change. The collected particulate material was quantified gravimetrically. All weighing of the impactor stage and filter catches was done on-site utilizing a Cahn electronic microbalance to a sensitivity of 10 μg.

4.3.7 Orsat

Manual Orsat (EPA Method 3) was used to quantify CO, CO_2, and O_2 for molecular weight determinations. Gases were collected through a moisture-removal system.

4.3.8 Total Hydrocarbons

The average total hydrocarbon concentration was measured using EPA Method 25A.

4.3.9 Support Methods

EPA Methods 1, 2, and 4 were used for determinations of traverse points, velocity profiles, and moisture content as required in all isokinetic sampling efforts. The procedures are given in the test plan (Appendix G) and in the METCO report (Appendix F).

4.4 Trial Burn and Sample Collection Sequence and Procedure

4.4.1 Trial Burn Sequence and Procedure

The trial burn was conducted in accordance with "JACADS Deactivation Furnace System TSCA Demonstration and RCRA Trial Burn Plan (Appendix R).

The following items should be reported as deviations from the above referenced test plan. The below listed items were either discussed at the pre-trial burn meetings or through the course of the trial burn at which time EPA Representative concurrence was obtained.

- Section 6.1 of the Test Plan addresses steady-state conditions. It was clarified that reheating the kiln for 30 minutes would not be a test requirement if the waste feed stop did not exceed ten (10) minutes in duration. This would apply to bin changes as well as other stop feeds.

- Section 7.5 of the Test Plan requires the processing of rockets to be halted after the completion of a test burn with the exception that the remaining SPORT may be finished. It was agreed that rocket processing could continue as long as all samples for the test were collected beforehand.

- Section 6.1 of the Test Plan states SDS may be introduced into the DFS. SDS was <u>not</u> introduced into the DFS.

- Clarified Section 6.1 of the Test Plan by agreeing that if stop feed are not an operational type stop/upset to the incinerator then they will not be counted as officially stops since the rocket feed is a batch type process.

- Clarify Section 7.4.5 of Test Plan by adding following conditions. For any stopfeed of less than 7 minutes, rockets would have to be fed into the kiln for the duration of the outage before the test officially commenced again - that is, stack sampling would began and the accumulation of lost time would stop. If the outage was seven or more minutes, rockets would have to be fed to the kiln for at least 7 minutes before the test officially commenced.

- Changed Section 7.4.3 of Test Plan by not requiring either a brine tank sample or a brine salt sample. Rather, the PAS scrubber sump samples would be taken before and after each test run. Also transfers of brine to the brine storage tanks would be allowed as long as quantities and times of transfer were recorded.

The following recent modifications to the DFS need to be added to Appendix A of the Test Plan and were discussed at the pre-trial burn meeting.

Elimination of the Use of the Segregator Conveyor. Elimination of the segregator conveyor was necessary due to continuous operational problems and feed stops caused by broken conveyor bearings, gate linkage jamming, and conveyor belt spillage. These equipment malfunctions are attributed to the highly corrosive operating environment the segregator conveyor operated in.

The rocket shear machine was modified by locking the flapper gate which fed the fuses to the segregator conveyor in a position to directly feed the sheared fuses to the DFS. Consequently, sheared fuses now bypass the segregator conveyor. Once sheared, the fuse is cycled through the chute gates and into the DFS for incineration before the remaining portion of the rocket is processed. Thirty seconds after the fuse cycles through the chute gates, the remaining portion of the rocket is sheared and fed into the DFS.

Removal of Mist Eliminator Prefilters and Installation of a Wash System. Prefilters were removed from the DFS mist eliminator because they were not effective. A wash system was installed to allow in-situ cleaning of the mist eliminator filter candles. Spray nozzles are located at the top of each candle and are connected to a manifold supplied with hot water. Provisions are provided for injecting a detergent into the hot water if needed.

Antifoam Solution in PAS System. An antifoam emulsion is injected into the PAS brines at approximately 10 ppm to prevent foaming. This action was taken to eliminate scrubber tower high alarms which were occurring on a regular basis. Antifoam emulsion was not used during the trial burn.

Interlock of AOS Agent Measurement System to the DFS Waste Feed Cutoff System. A rolling hour average of agent drained from the rockets is calculated to track agent residue feed to the DFS. The calculated agent feed value to the DFS is programmed to alarm at 20 lb/hr and to automatically disable the rocket shear machine at 24.7 lb/hr.

Flapper Valve Removal at Discharge of the HDC. The flapper valve at the discharge of the HDC was removed and replaced with a gate valve which is currently being used at the discharge of the HDC.

Bin Change at 32 Rockets. The rocket shear machine was programmed to alarm when 32 rockets are fed to the DFS. This alerts the furnace operator that the HDC waste bin must be changed in 10 minutes to prevent overfilling.

4.4.2 Sample Collection Sequence

The general sequence of events in carrying out the sampling was as follows:

Personnel from SRI arrived on Johnston Atoll at 0920 on Wednesday, February 26, 1992. Personnel attended an orientation. All work was completed at 1700.

On Thursday, February 27, orientation began at 0600 and was completed at 1315. Personnel attended a scheduling meeting from 1400 until 1500. METCO personnel arrived at the plant at 1530. Entry was delayed until 1630 due to a lack of escorts. The sampling equipment was unpacked and moved onto the stack house. All work was completed at 1730.

On Friday, February 28, work began at 0700. The testing equipment was moved onto the stack. All work was completed at 1500.

On Saturday, February 29, work began at 0700. The equipment was checked out and prepared for testing. All work was completed at 1500.

On Monday, March 2, work began at 0700. Personnel prepared to do EPA audits. All work was completed at 1530.

On Tuesday, March 3, work began at 0700. The equipment was prepared for testing. The first set of tests for particulate matter, hydrogen chloride, metals, semivolatile organic compounds, volatile organic compounds, energetic compounds, THC, and particle-size distribution on the DFS Incinerator Stack began at 1030. The test was stopped at 1347 due to unit operational problems. At 1545 it was decided to abort the first test. The sampling trains were disassembled and the equipment was secured for the night. All work was completed at 1930.

On Wednesday, March 4, work began at 0600. The equipment was prepared for testing, and rocket feeding began at 0737. Sampling began at 0835 and proceeded until 1012, when a kiln stall alarm shut the kiln down. The kiln was relit at 1110, rocket feeding resumed at 1132, and sampling resumed at 1141. A flame-failure in the kiln during the switchover from manual to automatic control locked the kiln out again at 1205. A port change occurred at 1205. The kiln was relit at 1230, rocket feeding resumed at 1247, and sampling resumed once more at 1256. The test was completed at 1504 hours. Pretest process samples for the first test run were collected between 0820 and

0845, and post-test samples were collected between 1535 and 1615. The samples were recovered, and the equipment was secured for the night. All work was completed at 1930.

On Thursday, March 5, work began at 0700. The equipment was prepared for testing, rocket feeding started at 0803, and sampling for the second test run (3rd attempt) began at 0831. Sampling proceeded with no interruptions except for sampling-train port changes at 1032 through the duration of the test. Sampling was completed at 1258. Pretest process samples were collected between 0815 and 0840; post-test samples were collected between 1315 and 1415. The third test run (4th attempt) also took place on March 5, 1992. Rocket feeding continued at a steady rate throughout the day. Sampling began for the third test at 1548 and proceeded until 1708, when it was stopped because a conveyor-index problem had caused a stop feed at 1700. Feeding resumed at 1708, but an ACAMS malfunction caused another feed stoppage at 1712. Feeding resumed after this stoppage at 1723, and sampling resumed at 1730. Dust on an optical position detector on the rocket-shear machine caused a feed stoppage at 1801, and sampling stopped at 1802. The rocket-shear machine was operated manually at a reduced rate until 2000, when the optical problem was cleared. Normal processing then resumed, and sampling was restarted at 2008. A port change occurred at 2016. Sampling was completed with no further feed stoppages at 2257. Pretest process samples were taken between 1600 and 1620, and post-test process samples were taken between 2305 and 2355. The samples were recovered and all work was completed at 0100 on Friday, March 6, 1992.

On Friday, March 6, work began at 1230. The equipment was prepared for testing, but testing was delayed because of unit operational problems. The fifth set of tests began at 2008. Testing was delayed from 2246 until 2304 and was stopped at 2346 because of unit operational problems. At 0140 on Saturday, March 7, it was decided the fifth set of tests would be aborted. All work was completed at 0200 that day.

On Saturday, March 7, work began at 1300. The sampling trains from the fifth set of tests were disassembled. Blank train samples were collected, and a VOST Audit Cylinder was sampled. The samples were packed for shipment, and all work was completed at 2300.

On Monday, March 9, work began at 0730. The equipment was prepared for testing, but testing was delayed as a result of unit operational problems. It was decided that no testing would be performed. The sampling trains were recovered as blanks, and all work was completed at 1700.

On March 10 and 11, 1992, testing was performed on the Liquid Incinerator.

On Thursday, March 12, work began at 1000. The equipment was prepared for testing, and after testing was again delayed briefly because of unit operational problems, the fourth test run (6th attempt) took place. Rocket feeding began at 1058, and sampling began at 1350. A problem with the rocket-shear machine indexer resulted in a feed stoppage from 1405 to 1410. Sampling stopped at 1357 and resumed at 1425. A failure of the upper feed gate caused a feed stoppage at 1439, and sampling stopped at 1451. Feed resumed at 1453,

and sampling resumed at 1457. The feed-gate problem continued, and sampling again stopped at 1504. Feeding resumed once more at 1512, and sampling resumed at 1523. A port change occurred at 1638. A recurrence of the upper feed-gate problem caused a feed stoppage at 1652. Feeding was restarted at 1738, and sampling resumed at 1746. A delay in the movement of munitions from the igloos to JACADS caused a feed stoppage from lack of rockets from 1815 to 1828. Sampling was stopped from 1815 to 1835. Sampling resumed at 1835 and continued with no further interruptions until the completion of the test at 2007. Pretest process samples were taken between 1240 and 1310, and post-test samples were taken between 2010 and 2120. The samples were recovered, and the equipment was secured for the night. All work was completed at 2145.

On Friday, March 13, work began at 0800. The samples were packed and prepared for shipment to SRI.

4.4.3 Sample Collection Procedure

Samples of 5-min duration for the particulate matter and for HCl were taken isokinetically at each traverse point with an EPA-type heated, glass-lined probe (M5AT). Moreover, samples of 3-min duration for the particulate matter and for heavy metals were also taken isokinetically at each traverse point with an EPA-type heated, glass-lined probe (MMT). Finally, semivolatiles and energetics samples of 10-min duration were taken isokinetically at each traverse point with an EPA-type heated, glass-lined probe (MM5 and STEM).

Each sampling train was leak-checked at the nozzle (at 15 in. of mercury vacuum) before each test, during port change, during component changes, and was again leak-checked at the nozzle after each test at the highest vacuum reading recorded during the test. The pitot-tube lines were checked for leaks before and after each test run and when port changes were made. A leak criterion of "not greater than 0.02 cfm was used for the Method 5 type trains and "not greater than 0.1 in. of mercury in 2 min" was used for the VOST. Pretest leaks were corrected prior to the start of sampling. The lines were also checked for clearance, and the console manometer was zeroed before each test. The pitot-tube lines were checked for leaks before and after each test run and when port changes were made. The method was modified to preclude the collection of moisture in the pitots. After each pressure reading a three-way valve system was utilized to clear moisture from the pitot tubes.

In summary, for each run, most stack sampling was conducted simultaneously. The M5AT sampling process concluded somewhat before the midpoint of the overall test period, and the M5MMT sampling process started at the beginning of the third hour of sampling.

The samples collected for analysis included those needed for determining:

a. Particulate concentration in the exhaust gas: two samples per test (M5AT and MMT).

b. HCl and HF concentration in the exhaust gas: one sample per test (M5AT).

c. Selected metals in stack emissions in the exhaust gas: one sample per test (MMT).

d. Volatile and semivolatile organic emissions in the exhaust gas (MM5 and VOST).

e. Energetics emissions in the exhaust gas (STEM).

f. CO_2 in the exhaust gas (Orsat) and afterburner.

g. NO_x in the exhaust gas.

h. CO and O_2 in the afterburner exhaust gases and the stack gases.

i. Analytes in PAS brine, which was collected at beginning and end of each test from DFS Valve 555.

j. Analytes in caustic makeup, which was sampled at beginning and end of each test from DFS Valve 302.

k. Analytes in process feed water, which was sampled at the beginning and end of each test from DFS Valve 627.

l. Analytes in fuel oil from Valve 316 (Day Tank drain valve).

m. Analytes in scrubber liquor, which was sampled at the beginning and end of each test from DFS Valve 557 (at the outlet of the active liquor pump).

n. Analytes in cyclone ash, which was collected immediately after each test.

o. Analytes in HDC bin ash; samples were taken approximately 24 hr after the time periods during which the hoppers were used. The delay was required to permit the contents of the hoppers to cool from their initial >1000 °F temperature.

p. Particle size distribution - one sample per test at the stack platform [U. of W. (Pilat) Mark V/III cascade impactor].

q. Total hydrocarbons in the exhaust gas.

r. Chemical agent in the exhaust gas.

No brine salt was sampled during the tests. No brine transfers occurred during this trial burn. Brine salt generation is a batch process. Because this trial burn started with a clean PAS, the trial burn period was too short to allow generating of salts. Table 4-1 summarizes the sampling and analysis procedures. The sampling procedures are also summarized in Appendix B.

analysis procedures. The sampling procedures are also summarized in Appendix B.

4.5 Sampling Contingency Plan

The following contingency plans were adopted and used in these tests:

Upset conditions in the incinerator, such as the loss of a key monitor, an agent alarm, or any non-steady-state incinerator condition, will result in a feed stoppage. Sampling operations will be affected by the upset condition as defined below:

Upset of 30 or less minutes	Stop trains in stack
Upset greater than 30 minutes	Remove and cap trains
Upset greater than 2 hours	Stop test
Cumulative feed stop of 2 hours	Stop test, unless otherwise directed by EPA

Leak checks must be performed when trains are removed from the stack; if leaks are found, the test must be terminated.

4.6 Analysis

The procedures that were used for preparing and analyzing samples are described briefly in this section. The test plan in Appendix G also describes the analytical methods. The methods were based on standard EPA procedures, which are referenced below according to method number. Any deviations from the standard methods are documented with supporting QA/QC results.

4.6.1 Semivolatile Organics Analysis

4.6.1.1 Extractions

The XAD-2 sorbent cartridges for the MM5 were prepared according to SW846 Method 0010. The sorbent cartridges were spiked with 92.5 μg of 1,2-dichlorophenol-d_3, 205 μg of 1,2,4-trichlorobenzene-d_3, 1 μg of decachlorobiphenyl-$^{13}C_{12}$ and 2 ng of 2,3,7,8-tetrachlorodibenzo-p-dioxin-$^{37}Cl_4$ prior to shipment to the field.

MM5 analytes were extracted from the sorbent cartridges according to SW846 Method 3540. The XAD-2 sorbent cartridges and filters were spiked with PCDD/F isotope-dilution standards, which consisted of the following fourteen $^{13}C_{12}$-labeled compounds: 2,3,7,8-TCDF, 1,2,3,7,8-PeCDF, 2,3,4,7,8-PeCDF, 1,2,3,4,7,8-HxCDF, 1,2,3,6,7,8-HxCDF, 1,2,3,7,8,9-HxCDF, 1,2,3,4,6,7,8-HpCDF, 1,2,3,4,7,8,9-HpCDF, 2,3,7,8-TCDD, 1,2,3,7,8-PeCDD, 1,2,3,4,7,8-HxCDD, 1,2,3,6,7,8-HxCDD, 1,2,3,4,6,7,8-HpCDD, and OCDD. In addition, each sample was also spiked with the PCB surrogate octachloronaphthalene and with the base-neutral-acid surrogates phenol-d_6, 2-fluorophenol, nitrobenzene-d_5, 2-fluorobiphenyl, 2,4,6-tribromophenol and terphenyl-d_{14}. The liquid-impinger samples were subjected to liquid-liquid extraction by SW846 Method 3510 or 3520. The filter and front wash from each train were combined, and the resin

TABLE 4-1. SUMMARY OF SAMPLING AND ANALYSIS ACTIVITY[a]

Sampling method	Sample description	Sampling period (minutes)	Sampling location	Analytical parameters	Analytical method
EPA VOST	Volatile Organic Sample Train Slow VOST	160	Stack House	Volatile PICs	EPA 8240/5040
EPA M5AT	Method 5 Acid	120	Stack Platform	Particulates HCl, HF	EPA 5 EPA 300 Ion Selective Electrode
EPA MM5	Modified Method Five	240	Stack House	Semi-volatile PICs PCDD/F	EPA 8270 EPA 8290
M5 Metals	Method 5 Metals	72	Stack Platform	Particulates, Selected Metals	EPA 5 EPA 6010/7420
EPA REF Method 3	Orsat, CEMS	240	Stack House	CO_2, O_2, CO	EPA 3, 3A
GRAB	Brine		DFS valve 555	EP Toxicity Metals pH Anions PCDD/F Volatile PICs Semivolatile PICs Agent	EPA 6010/7470 EPA 9040 EPA 300 EPA 8290 EPA 8240 EPA 8270 GC

(continued)

TABLE 4-1 (continued)

Sampling method	Sample description	Sampling period (minutes)	Sampling location	Analytical parameters	Analytical method
GRAB	Scrubber Liquor		DFS valve 557	EP Toxicity Metals	EPA 6010/7470
				pH	EPA 9040
				Anions	EPA 300
				PCDD/F	EPA 8290
				Volatile PICs	EPA 8240
				Semivolatile PICs	EPA 8270
				Agent	GC
GRAB	Process Water		DFS valve 627	EP Toxicity Metals	EPA 6010/7470
				pH	EPA 9040
				Anions	EPA 300
				PCDD/F	EPA 8290
				Volatile PICs	EPA 8240
				Semivolatile PICs	EPA 8270
				Agent	GC
GRAB	Caustic		DFS valve 302	EP Toxicity Metals	EPA 6010/7470
				pH	EPA 9040
				Anions	EPA 300
				PCDD/F	EPA 8290
				Volatile PICs	EPA 8240
				Semivolatile PICs	EPA 8270
				Agent	GC
ACAMS	Stack gas	Continuous	Stackhouse DFS Blower Duct	VX	Desorption/GC
CO		Continuous	Afterburner, Stack		

(continued)

TABLE 4-1 (continued)

Sampling method	Sample description	Sampling period (minutes)	Sampling location	Analytical parameters	Analytical method
CO_2	Stack gas	Continuous	Afterburner		
NO_x	Stack gas	Continuous	Stack		
O_2	Stack gas	Continuous	Kiln Exhaust, Afterburner, Stack		
THC	Stack gas	Continuous	Stack		

[a]Appendix J contains the test plan and has more detailed descriptions of sampling and analysis methods.

and back half of each train were similarly combined, to make two separate samples from each train. Each of the resulting samples was concentrated to 10 mL and split to allow the determination of PCBs on 1 mL of sample, total chlorinated organics (RCl) on 1 mL of sample, and PCDD/F on 8 mL of sample.

Aqueous samples (PAS brine, caustic makeup, feed water) were treated for extraction by the liquid-liquid extraction method given in SW846 Method 3520. About 500 mL of each sample was placed in a continuous liquid-liquid extractor, pH-adjusted to greater than 11 (if necessary), and spiked with the chlorinated organic surrogates and the PCDD/F isotope-dilution standards. The extraction was then carried out with methylene chloride for 18-24 hours. The methylene chloride was removed, the pH of the sample adjusted to less than 2, and the extraction repeated for an additional 18-24 hours with another 500 mL of methylene chloride. Each sample was concentrated to 10 mL, so that 1 mL could be used for semivolatile organics and 9 mL for PCDD/F determination.

Aqueous samples (PAS brine, caustic makeup, feed water) were treated for extraction of PCBs by the liquid-liquid extraction method given in SW846 Method 3510. Thus, 500 mL of each sample was placed in a separatory funnel, the pH was adjusted to between 5 and 9 (if necessary), and the sample was spiked with the PCB surrogates. The sample was then subjected to three extractions with methylene chloride. During the ensuing sample-concentration step, the solvent was exchanged to hexane and concentrated to 10 mL.

Samples for PCDD/F analysis were cleaned up according to Method 8290. No further cleanup was performed on the portion of the sample reserved for the determination of semivolatile organics.

Ash samples (HDC residue and cyclone) were submitted for treatment according to the Soxhlet extraction method in SW-846 Method 3540. In this procedure, 10 g of the ash was mixed with 10 g of anhydrous sodium sulfate. Samples were spiked with the PCB surrogate and PCDD/F isotope-dilution standards. The extraction solvent was toluene. The extracts were concentrated to near dryness and made up to 10 mL in hexane; 1 mL was taken for PCB analysis and 9 mL for PCDD/F analysis.

The fuel-oil samples were prepared by weighing 2 g of each sample into a 10-mL volumetric flask, adding the PCB surrogate or PCDD/F isotope-dilution standards, removing the spiking solvent by evaporation with nitrogen, and diluting the sample to 35 mL with hexane. Fuel oil samples for chlorinated organics were prepared by adding 10 mL of fuel oil to 10 mL of methylene chloride.

4.6.1.2 Analytical Procedures for Determining Semivolatile Organics

4.6.1.2.1 Analytical Procedures for Determining PCBs

The determination of PCBs in ash and incinerator-process samples was performed by capillary GC with electron-capture detection (ECD). The GC/ECD conditions are given below. External-standard calibration with linear-regression calibration curves were used for quantitation. From the final extract volume of 10 mL, a 1-mL aliquot was taken for analysis by GC.

Instrument:	HP 5890 equipped with an electron-capture detector
Column:	DB-5, 5 m x 0.53 mm ID
Temperature:	Programmed 180 °C for 3 minutes, Ramp 8 °C per min to 275 °C
Detector Temperature:	300 °C
Injection Volume:	1 μL (on-column injection)
Carrier Gas:	Helium
Carrier Gas Flow Rate:	8 cm^3/min

Fuel-oil samples analyzed for PCBs were diluted with hexane and analyzed by GC.

Instrument:	HP 5890 equipped with an electron-capture detector
Column:	DB-608, 30 meter x 0.53 mm ID
Temperature:	Programmed 150 °C for 5 minutes, Ramp 5 °C per minute to 270 °C, held at 270 °C for 11 minutes
Detector Temperature:	300 °C
Injector Temperature:	210 °C
Injection Volume:	1 μL
Carrier Gas	Helium
Carrier Gas Flow Rate:	8 cm^3/min

The analysis of PCBs in stack gas was based on EPA Method 680. However, the determination of PCBs in stack gas was carried out with high-resolution (HR) mass spectrometry (MS). Two isotopically labeled internal standards (13C12-3,3',4,4'-tetrachlorobiphenyl and 13C12-2,2',3,3',5,5',6,6'-octachlorobiphenyl) and two surrogate standards (13C12-decachlorobiphenyl for field spikes and octachloronaphthalene for laboratory surrogates) were used. Five-level calibration curves were generated, the lowest concentrations corresponding to 4 ng each of 2-chlorobiphenyl (a mono-PCB), 2,3-dichlorobiphenyl (a di-PCB), 2,4,5-trichlorobiphenyl (a tri-PCB), 2,2',4,6-tetrachlorobiphenyl (a tetra-PCB), 2,2'3,4,5-pentachlorobiphenyl (a penta-PCB), 2,2',4,4',5,6'-hexachlorobiphenyl (a hexa-PCB), 2,2',3,4,5,6,6'-heptachlorobiphenyl (a hepta-PCB), 2,2',3,3',4,5',6,6'-octachlorobiphenyl (an octa-PCB), 2,2',3,3',4,4',5,6,6'-nonachlorobiphenyl (a nona-PCB), and decachlorobiphenyl (deca-PCB) in 100 μL of solution.

The GC/MS analysis conditions are given below:

Instrument:	VG 70S GC/MS equipped with HP 5890 GC
Column:	J&W DB-5, 60 m x 0.32 mm ID, 0.25-μm film
Column Temp:	45 °C hold 1 min, then ramp to 300 °C at 8 °C/min, hold 8 min
Carrier Flow:	He at 1.5 mL/min
Injector Temp:	275 °C
Interface Temp:	220 °C

Injection Volume:	2 μL
Data System:	VG 11/250J

4.6.1.2.2 Energetic Samples

Samples that were collected for determination of energetic analytes were analyzed by the procedures outlined in Sampling and Analytical Protocol for the Resource Conservation and Recovery Act (RCRA) Trial Burns at JACADS (SRI-APC-90-361-6967-2-II-R4). All samples (STEM and PAS) were subjected to extraction in the field at the JACADS Site. The extracts were shipped to SRI and analyzed by GC. Acetone rinse samples were evaporated to near dryness and redissolved in toluene before analysis.

The chromatographic procedures are outlined below.

Instrument:	HP 5890 equipped with an electron-capture detector
Column:	DB-5, 5 m x 0.53 mm ID
Oven Temperature:	Programmed 130 °C for 10 minutes, Ramp 8 °C per minute to 250 °C, held at 250 °C for 5 min
Detector Temperature:	300 °C
Injection Volume:	1 μL (on-column injection)
Carrier Gas:	Helium
Carrier Gas Flow Rate:	8 cm^3/min

4.6.1.2.3 Polychlorinated Dibenzo(p)dioxins and Polychlorinated Dibenzofurans

Samples designated for PCDD/F analyses were analyzed by HRGC/HRMS according to EPA Method 8290.

Fourteen instead of nine isotopically labeled internal standards (isotopically labeled analogues of the seventeen target compounds except for 2,3,4,6,7,8-HXCDF; 1,2,3,7,8,9-HXCDD; and octachlorofuran), two isotopically labeled recovery standards (13C12-1,2,3,4-TCDD and 13C12-1,2,3,7,8,9-HXCDD), and one isotopically labeled cleanup standard (37CL4-2,3,7,8-tetrachlorodibenzo[1,4]dioxin) were used. The cleanup standard was spiked into XAD-2 resin used in the field (field spike) or into the concentrated extract prior to cleanup (cleanup standard) for all other samples. Five-level calibration curves were generated with the use of the 17 target PCDD/F compounds specified by Method 8290. The lowest concentrations corresponded to 0.02 ng of TCDD or TCDF; 0.10 ng of PECDD, PECDF, HXCDD, HXCDF, HPCDD, or HPCDD; and 0.20 ng of OCDD and OCDF in 20 μL of solution.

The GC/MS analysis conditions are given below:

Instrument:	VG 70S GC/MS equipped with HP 5890 GC
Column:	J&W DB-5, 60 m x 0.32 mm ID, 0.25-μm film

Column Temp:	100 °C hold 2 min, then ramp to 180 °C at 20 °C/min, hold 1 min, then ramp to 220 °C at 5 °C/min, hold 14 min, then ramp to 300 °C at 5 °C/min, hold 7 min
Carrier Flow:	He at 1.5 mL/min
Injector Temp:	275 °C
Interface Temp:	215 °C
Injection Volume:	2 μL
Data System:	VG 11/250J

4.6.1.2.4 Base-Neutral-Acid Analysis

The MM5 samples, as well as the process-liquid and fuel-oil samples, were analyzed for base-neutral-acid compounds by EPA Method 8270. Compounds that were analyzed included the target list from the test plan as well as nontarget compounds that were present at high levels. The spectra are retained in the files. The fuel-oil samples were diluted before analysis because of the high levels of semivolatile compounds that occurred naturally in the fuel oil and that interfered with the analysis. Internal standards were added immediately before analysis by GC/MS. The GC/MS conditions are given below:

Instrument:	HP 5971 GC/MS equipped with HP 5890 GC
Column:	HP-5, 60 m x 0.32 mm ID, 0.25-μm film
Column Temp:	45 °C hold 3 min, then ramp to 300 °C at 8 °C/min, then hold
Carrier flow:	He at 1 mL/min
Injector Temp:	270 °C
Interface Temp:	280 °C
Injection Volume:	1 μL
Data System:	HP DOS

4.6.2 Volatile Organics Analysis

Stack gases were analyzed for VOAs by SW846 Methods 5040 and 8260 with the 8240 compound list, with VOST sampling and GC/MS analysis. DFS incinerator residues were analyzed for VOAs by SW846 Method 8260 with the 8240 list. All analyses were by GC/MS. Compounds that were analyzed included the target list from the test plan as well as nontarget compounds that were present at high levels. The spectra are retained in the files.

4.6.2.1 VOST Analysis

VOST tubes were analyzed for volatile organics by SW846 Method 5040 with VOST sampling and analysis of VOST condensates, and aqueous process samples were analyzed by SW846 Method 8260 with the 8240 compound list. The analysis conditions are given below.

VOST tubes were purchased from Research Triangle Laboratory. The packed tubes were conditioned at approximately 180 °C for a minimum of 16 hr with

VOST tubes were purchased from Research Triangle Laboratory. The packed tubes were conditioned at approximately 180 °C for a minimum of 16 hr with prepurified nitrogen flowing through them. Two sets of tubes from each batch were then analyzed to confirm that no interfering compounds were present. The tubes were sealed and stored at 4 °C until used.

Internal standards and surrogates were added to all samples immediately prior to analysis by GC/MS. The volatile internal standards were bromochloromethane, 1,4-difluorobenzene, and chlorobenzene-d_5; each standard was added in the amount of 0.25 μg to VOST tubes, condensates, and aqueous process samples. Volatile surrogates were toluene-d_8, 1,2-dichloroethane-d_4, and 4-bromofluorobenzene (BFB); each was added in the amount of 0.25 μg. Although BFB was added to VOST samples, the high boiling point of this compound makes it a poor choice as a surrogate for VOST analysis.

GC/MS conditions:

Purge and Trap:	Tekmar LSC-2, Trap OV-1/Tenax/Silica Gel/Charcoal
Purge:	11 min
Desorb Temperature:	200 °C
Desorb Time:	4 min
GC:	HP 5980 Series II
Column:	30 m x 0.53 mm ID, 3.0 μm, DB-624
Program:	46 °C hold 5 min, then ramp to 140 °C at 6 °C/min
MS:	HP 5971 MSD
Scan:	35 to 260 amu at 4 sec/scan
Source Temperature:	200 °C
Interface:	Jet separator, 250 °C

4.6.3 Anions Analysis

The M5AT samples were analyzed for chloride and fluoride; the filter was analyzed for PO_4^{-3}. The process samples were analyzed for fluoride, chloride, and phosphate.

The ion-chromatographic conditions are listed below:

Instrument:	Dionex DX-100 with conductivity detection
Column:	Ion Pac AS-4A
Eluent:	0.75 Mm sodium bicarbonate/2.0 Mm sodium carbonate
Flow Rate:	2.0 Ml/min
Injection Volume:	100 μL

4.6.4 Metals Analysis

Process samples were prepared for analysis as set forth in SW846 Method No. 3010, which involves acid digestion. Sample preparation for the MMT stack samples was done according to EPA Method 0012, Methodology for the

Determination of Metals Emissions in Exhaust Gases from Hazardous Waste Incineration and Similar Combustion Processes. For the TCLP (Toxicity Characteristic Leaching Procedure) extractions of ash samples, SW-846 Method 1311 was followed.

The MMT and TCLP metals other than mercury were determined by inductively coupled plasma atomic emission spectrometry (ICP) according to SW-846 Method No. 6010. These analyses were performed on a Perkin-Elmer Plasma 40 Emission Spectrometer. The ICP wavelengths that were used are listed below.

Metal	Wavelength, nm
Arsenic	193.696
Selenium	196.026
Chromium	205.552
Antimony	206.833
Zinc	213.856
Cadmium	214.438
Phosphorus	214.914
Lead	220.353
Nickel	231.604
Barium	233.527
Boron	249.773
Manganese	257.610
Vanadium	292.402
Beryllium	313.042
Silver	328.068
Thallium	276.8
Tin	189.980
Cobalt	230.786
Copper	324.754

Mercury was determined in TCLP and MMT samples by cold-vapor atomic-absorption spectrometry at 253.7 nm (SW-846 Method No. 7470) with an Instrumentation Laboratory Model IL551 AA/AE Spectrometer equipped with a Model 440 Atomic Vapor Assembly.

4.6.5 pH Measurements

The pH levels of the liquid-process samples (liquor and brine) were measured prior to the analyses of these samples for other parameters. The pH values were determined by combination glass electrode (with internal reference electrode) according to SW-846 Method 9040.

4.6.6 Particulates

Particulates were quantified in the acetone-probe rinse and in the filter from the MMT and AT. These samples were dried to a constant weight in a desiccator and weighed on an analytical balance to ± 0.1 mg.

5. TEST RESULTS

5.1 Introduction

The test results for the DFS trial burn describe the DFS process characteristics, the rotary-kiln operating parameters, the nature of the DFS stack emissions, and the chemical content of the incinerator residues. These results allow the calculation of such RCRA- and TSCA-required parameters as the DRE for any POHC (eg. PCBs and nitroglycerin), the combustion efficiencies, the particulate emissions, the HCl emissions, the steady-state furnace-operating temperatures, the CO concentrations in the stack, and the concentrations of certain metals in the process residues. Additionally, data are available from the monitoring of stack emissions for O_2, CO_2, PICs, PCDD/F, THC, and metals, as well as from the analysis of incinerator-process samples (process water, scrubber liquor, scrubber brine, caustic, cyclone ash, and HDC residue) for PICs, PCDD/F, F^-, PO_4^{-3}, and pH. Data are presented to show particulate composition (front half) and gaseous composition (back half) of samples from MM5 and M5MMT trains.

5.2 Process Data

5.2.1 General

Process conditions for the four test runs are summarized in Table 5-1 and 5-2. The data represent averages over the time spans of the runs and were compiled from PDAR system records and manual stack-sampling logs. These data indicate that the required temperature conditions, as specified in the RCRA permit application, were maintained during the runs. The CO concentration data in the PDAR log were not the raw measurements but were, instead, the values that were obtained after correction of the measurements to an O_2 concentration of 7%. Also listed in Table 5-1 are THC results which when expressed as propane indicated that 7 ppm or less was found for each test run. Figures 5-1 through 5-4 provide graphic illustration of the oxygen conditions, fuel flow rates and gas temperatures measured during the test. Other PDAR plots are included in Appendix C. The times during which stack sampling was taking place are also given in these figures. The data shown in these figures indicate that the samples were obtained under nominally steady-state DFS operating conditions during each test. Since the samples were obtained without exceeding the limits for interruptions called out in the test plan, they were deemed to have met the time-related requirements for TSCA demonstration burns and RCRA trial burns.

5.2.2 Combustion Efficiency

Hourly average CO concentrations from the PDAR system and hourly average CO_2 concentrations from the Orsat analyses were used to calculate combustion efficiencies. The CO concentrations, which are reported in the PDAR data at 7% O_2, were adjusted back to stack conditions using the PDAR stack O_2 concentrations before being averaged. The calculated combustion efficiencies are provided in Table 5-3. These show that the requirement that hourly

TABLE 5-1. PDAR DATA SUMMARY FOR DFS TRIAL BURN[a]

VARIABLE	Test Run 1			Test Run 2			Test Run 3			Test Run 4		
	MINIMUM	MAXIMUM	AVERAGE	MINIMUM	MAXIMUM	AVERAGE	MINIMUM	MAXIMUM	AVERAGE	MINIMUM	MAXIMUM	AVERAGE
AB EXH CO, ppm @ 7% O_2	22	41	30	20	60	26.2	14	30	20.4	29	50	34.5
AB EXH O2, %	9.1	14	11.1	8.5	18.4	10.8	8.6	16.5	11.0	8.9	15.1	10.8
Stack O2, %	11.1	13.9	12.1	11.8	16.3	13.4	11.6	17.8	13.7	11.9	14.7	13.2
Stack CO, ppm	22	31	26.5	26	41	30	24	52	29.6	26	38	31.0
Stack NOX, ppm	16	473	235	24	408	201	25	≥500	202	27	463	220
Kiln Burner End Temp, °F	941[b]	1078	1050	1035	1069	1049	1035	1074	1050	1029	1071	1051
Kiln Exh. Gas Temp., °F	871	1229	1129	1092	1292	1212	914	1290	1181	900	1206	1074
Cyclone DP, in. W.C	0.19	0.5	0.38	0.24	0.47	0.37	0.18	0.46	0.30	0.27	0.52	0.39
HDC (Lower) Temp., °F	1015	1094	1052	1036	1085	1060	1018	1101	1059	1013	1100	1058
BLAD Gas Temp., °F	862	1188	1070	1040	1225	1161	900	1265	1131	831	1162	1022
Cyclone Inlet Temp., °F	777	1076	984	869	1143	1077	808	1137	1048	858	1063	973
HDC (Upper) Temp., °F	1036	1065	1051	1047	1071	1060	1045	1072	1059	1044	1076	1059
Venturi DP, in., W.C.	25.5	31.0	28.0	25.9	33.9	28.5	25.8	31.5	28.0	26.4	33.1	29.4
Quench Inlet Temp., °F	1510	1656	1575	1515	1584	1553	1459	1585	1540	1504	1598	1572
AB #2 Propane Flow, scfm	0	3	1.44	0	3	1.35	0	3	1.46	0	4	1.46
Quench (Brine) pH	11.0	12.3	11.3	11.0	11.1	11.0	9.8	14	10.55	10.4	11	10.6
AB Inlet Temp., °F	818	1161	1074	1011	1220	1168	842	1218	1130	865	1130	1030
AB Exhaust Temp., °F	1978	2105	2006	1987	2014	1998	1976	2025	1998	1970	2023	1998
Packed Bed DP, in. W.C.	2.1	6.6	4.1	2.5	4.4	3.5	2.0	5.0	3.1	3.3	7.0	4.9
Clear Liquor Flow, gpm	1275	1323	1299	1275	1322	1299	1275	1322	1299	1277	1327	1299

(continued)

TABLE 5-1 continued)

VARIABLE	Test Run 1 MINIMUM	Test Run 1 MAXIMUM	Test Run 1 AVERAGE	Test Run 2 MINIMUM	Test Run 2 MAXIMUM	Test Run 2 AVERAGE	Test Run 3 MINIMUM	Test Run 3 MAXIMUM	Test Run 3 AVERAGE	Test Run 4 MINIMUM	Test Run 4 MAXIMUM	Test Run 4 AVERAGE
Entrainment Sep., in. W.C.	0.4	0.8	0.57	0.5	0.6	0.54	0.4	0.7	0.49	0.5	0.7	0.57
Clean Liquor pH	8.7	9.7	9.1	8.2	8.9	8.6	8.3	10	9.2	9.6	10.3	9.8
Mist Eliminator DP, in. W.C.	2	4	3.0	3	3	3.0	3	4	3.2	3	4	3.7
Kiln Shell Temp. Pos. 1, °F	806	806	806	806	806	806	806	806	806	806	1427	1146
Kiln Shell Temp. Pos. 2, °F	804	1383	1212	1116	1367	1263	805	1380	1214	804	1340	1173
Kiln Fuel Oil Flow, gph	16.9	33.6	26.6	19.4	30.1	24.6	16.9	30.5	22.7	22.4	33.7	26.8
AB #1 Fuel Oil Flow, gph	45.5	78.4	62.3	35.9	56.1	45.0	34.0	56.7	43.7	55.4	65.4	58.6
AB #2 Fuel Oil Flow, gph	24.7	68.7	44.5	43.4	62.3	52.7	35.3	56.3	45.3	47.9	72.9	60.3
Kiln Shell Temp. Pos 3, °F	807	1130	1048	997	1169	1106	854	1141	1073	807	1136	1033
Kiln Shell Temp. Pos 4, °F	802	876	833	817	895	869	802	895	863	802	863	821
Kiln Shell Temp. Pos 5, °F	856	968	934	916	972	949	913	972	947	887	956	931
Feed Chute A Temp., °F	183	250	222	212	282	247	263	295	277	201	255	240
Vent. Air Temp., °F	127	144	136	136	151	145	151	156	153	129	140	137
Feed Chute B Temp., °F	142	149	145	151	167	155	153	163	158	154	172	160
Kiln rpm	0.39	1.91	1.88	0.83	1.92	1.88	0.21	1.92	1.88	0.23	1.91	1.85
AB #1 Comb. Air Flow, scfm	562	632	605	451	477	466	447	480	467	398	455	417
AB #1 Propane Flow, scfh	0	3	2.0	1	3	2.0	1	3	2.1	1	3	2.1
AB #2 Comb. Air Flow, scfm	407	1002	645	630	891	752	510	804	649	681	1049	862
Kiln Propane Flow, scfm	1	3	2.4	0	4	2.42	0	4	2.5	0	4	2.51
Quench Exhaust Temp., °F	178	182	179	175	179	177	174	180	178	178	182	180
Quench Brine Flow, gpm	179	181	180	170	179	174	179	181	180	168	172	170

(continued)

TABLE 5-1 continued)

VARIABLE	Test Run 1			Test Run 2			Test Run 3			Test Run 4		
	MINIMUM	MAXIMUM	AVERAGE	MINIMUM	MAXIMUM	AVERAGE	MINIMUM	MAXIMUM	AVERAGE	MINIMUM	MAXIMUM	AVERAGE
Brine Density, lb/cf	62.0	62.2	62.1	62.0	62.3	62.1	61.9	62.5	62.2	62.5	62.9	62.7
ID Fan Amps	247	429	320	266	394	315	231	396	294	262	425	332
Kiln Exhaust O_2, %	9.6	19.3	13.8	13.8	19.4	16.1	13.8	20.1	16.5	14.6	20.4	17
Venturi Brine Flow, gpm	258	261	260	238	250	243	248	254	252	238	242	240
Kiln Comb Air Flow, scfm	656	1002	790	568	883	732	485	873	675	659	1025	799
Kiln Exh. O_2, %	9.6	19.3	13.8	13.8	19.4	16.1	13.8	20.1	16.5	14.6	20.4	17.0
Agent Feed Rate, lbs/hr	0.4	8.2	5.6	3.2	7.7	6.8	1.4	12.9	6.5	1.2	9.7	4.9
Total Hydrocarbons[c], ppm (as Propane)	0	22	6.6	1	30	6.0	0	28	4.0	0	20	4.6

[a]The values in this table represent the maxima, minima, and averages over the periods when manual stack sampling took place. Because sampling did not cease immediately when upset conditions caused feed stoppages some values in the table are beyond permissable operating limits; however, the rocket feed did cease immediately when a limit was exceeded.

[b]When temperature dropped below operating limit, rocket feed ceased but sampling continued for several minutes.

[c]The total hydrocarbon data was recorded separately, not by the PDAR system, but is reported here for completeness.

TABLE 5-2. PROCESS DATA FROM MANUAL STACK SAMPLING[a]

	Test Run			
	1	2	3	4
Gas flow, acfm	23103	22405	21437	23060
Gas flow, dscfm	11569	11131	10914	11562
Gas temperature, °F	182	181	180	182
Percent moisture	39.4	39.8	38.4	39.2
Percent O_2 (dry)	13.9	13.0	13.2	13.1
Percent CO_2 (dry)	5.6	6.1	5.7	6.1
Total gas flow, lb/hr	74038	71632	69060	73839
Dry gas flow, lb/hr	52962	51042	49992	53020

[a]Averages of M5AT, MMT, STEM, and MM5 results.

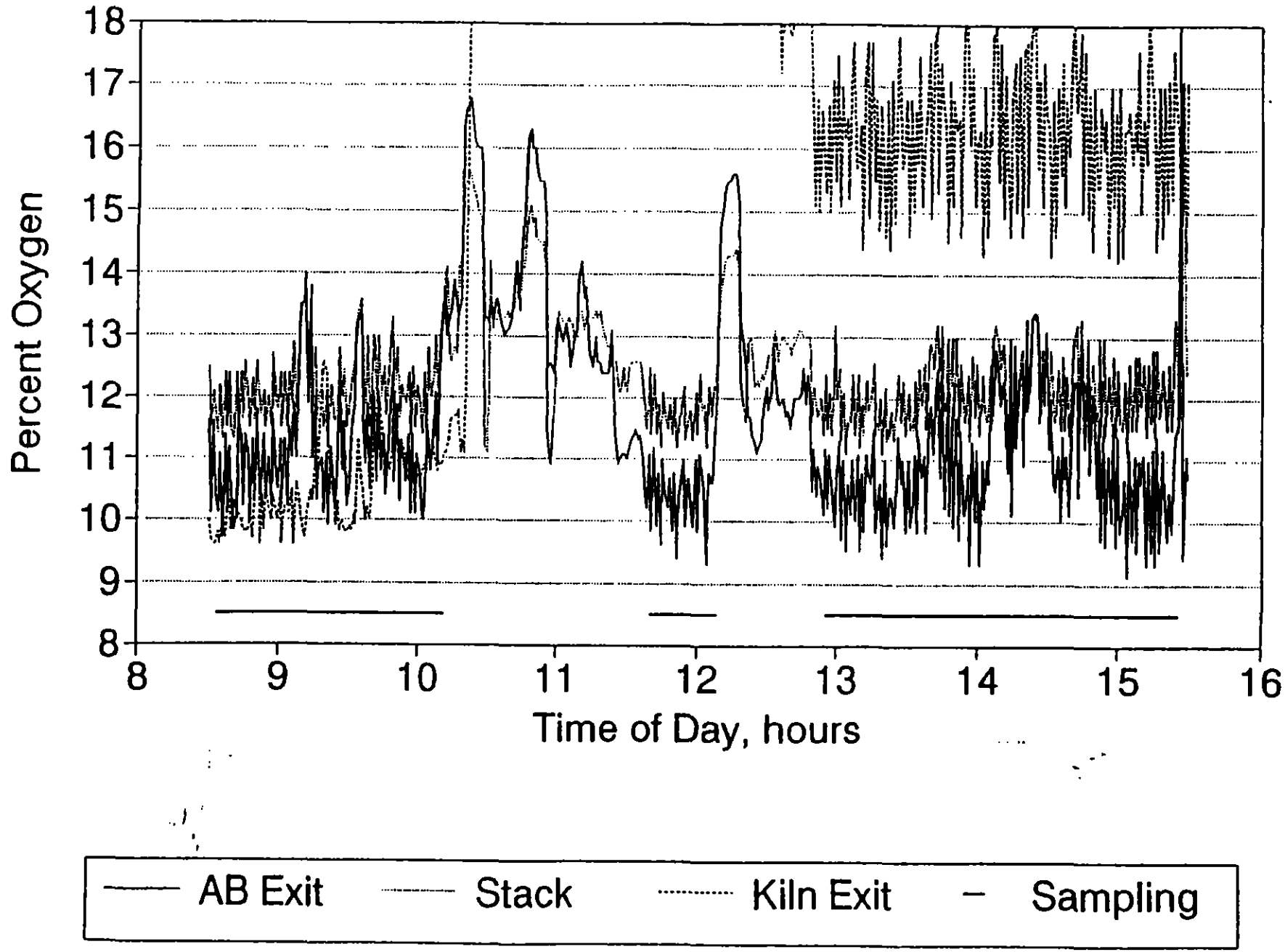
Percent Oxygen
18
17
16
15
14
13
12
11
10
9
8
8
9
10
11
12
13
14
15
16
Time of Day, hours
AB Exit
Stack
Kiln Exit
Sampling

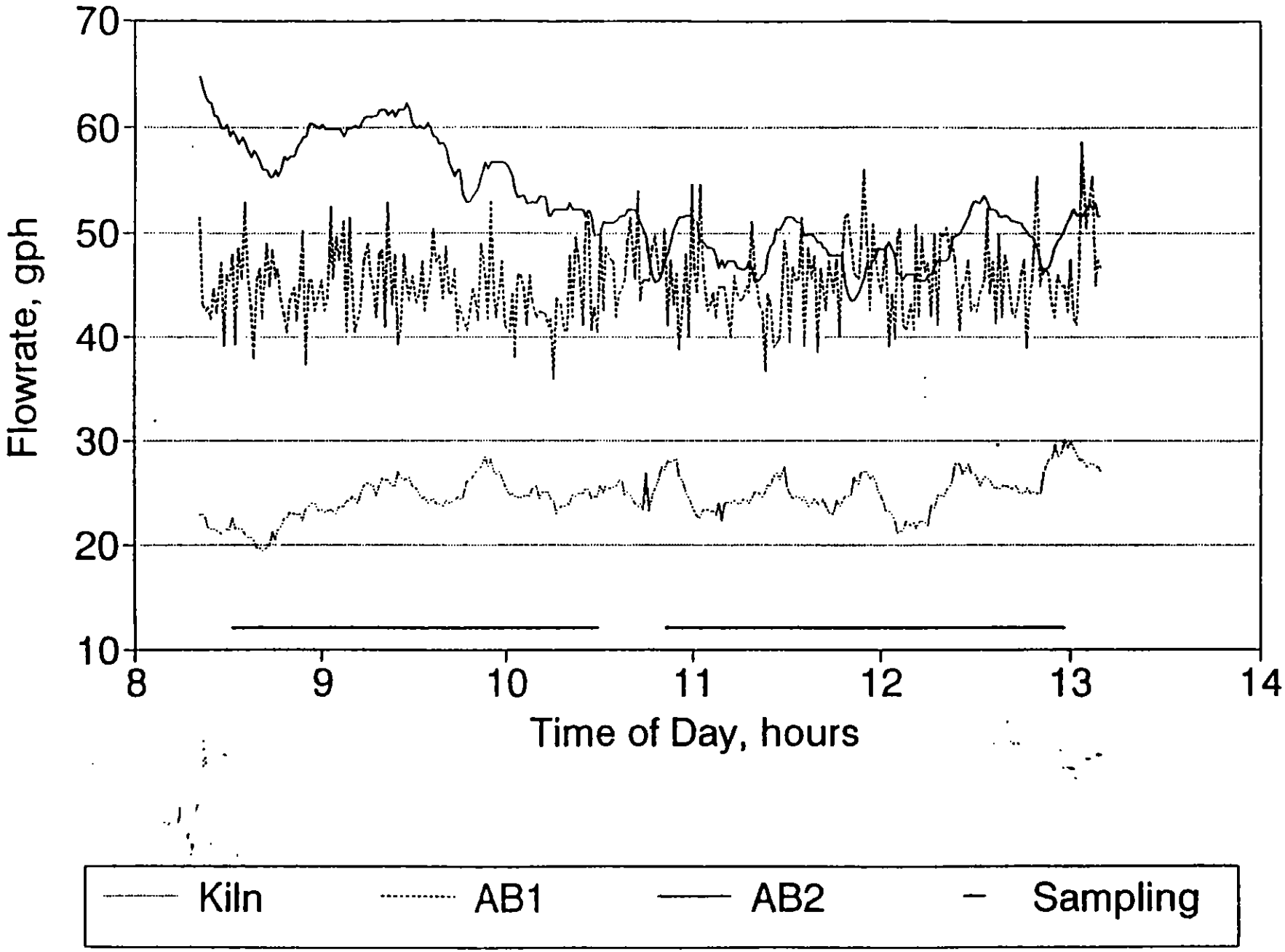

Figure 5-2. DFS fuel flows during Test 2

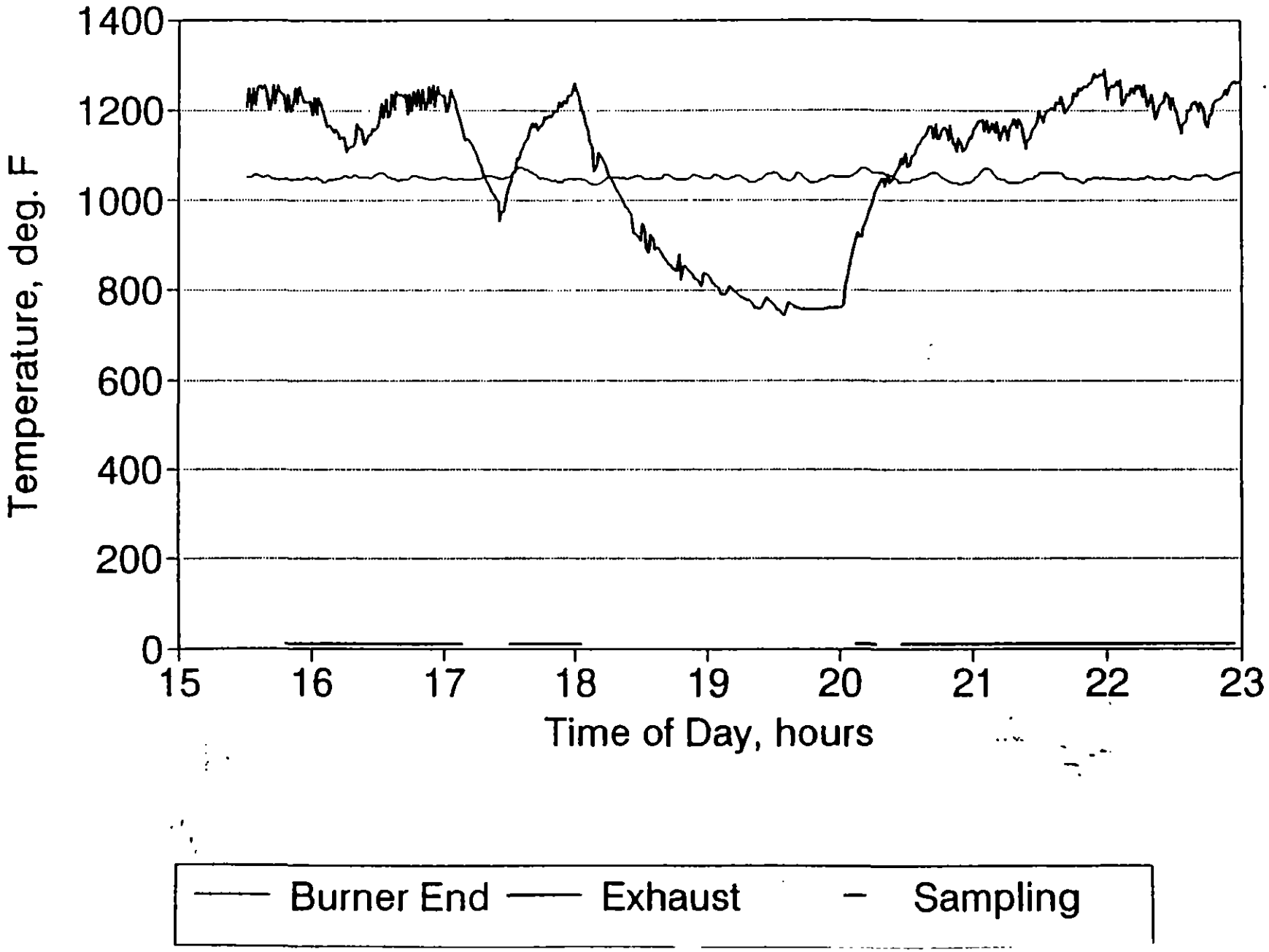
1400
1200
1000
800
600
400
200
0
Temperature, deg. F
15
16
17
18
19
20
21
22
23
Time of Day, hours
Burner End
Exhaust
Sampling

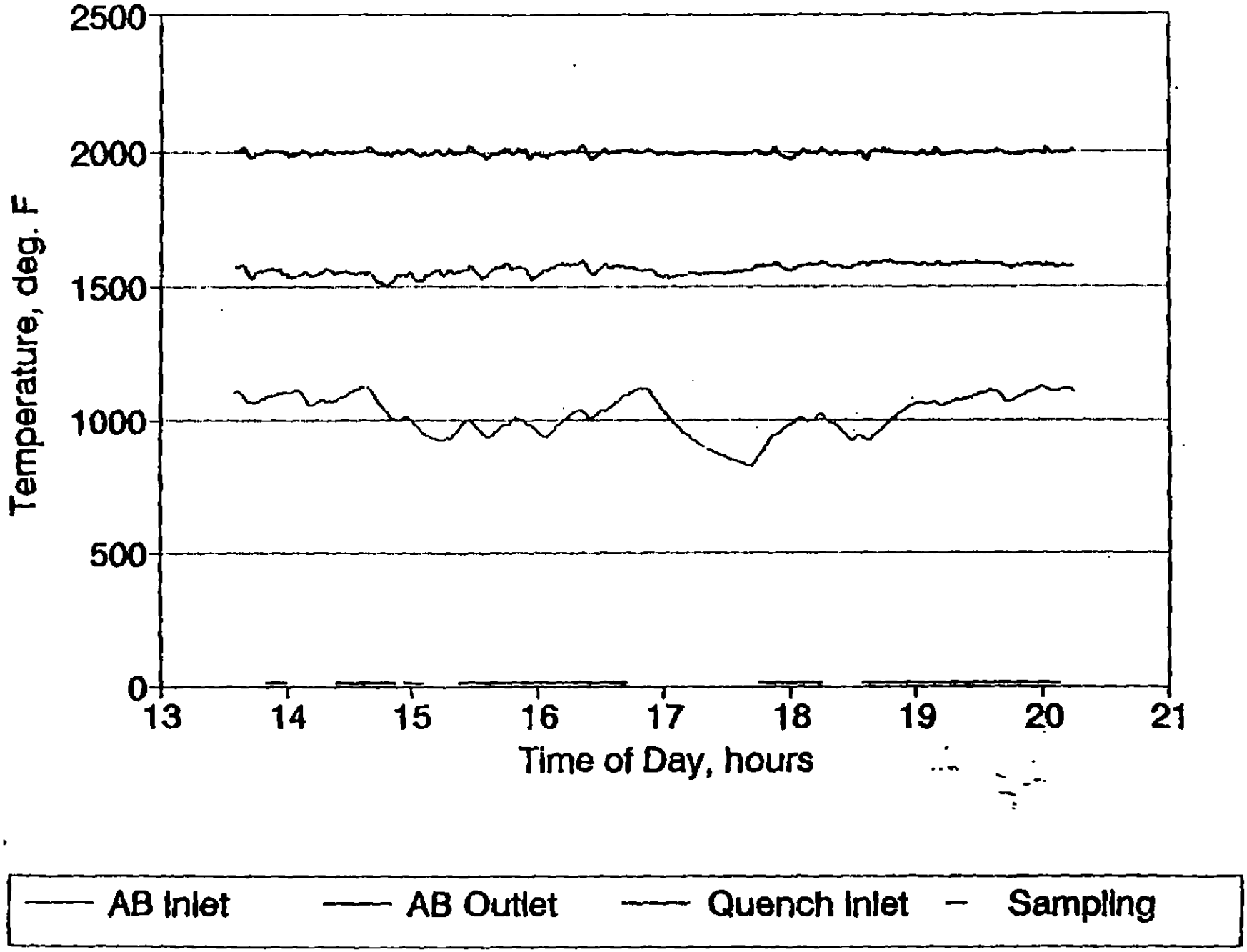

Figure 5-4. DFS flue gas temperature during Test 4

TABLE 5-3. COMBUSTION EFFICIENCY RESULTS

Date	Test Hour	CO[a] ppm	CO_2[b] ppm	COMB. EFF[c] %
3/4/92	1	16.5	56000	99.97
Test Run 1	2	17.7	56000	99.97
	3	15.4	56000	99.97
	4	17.6	56000	99.97
3/5/92	1	16.4	62000	99.97
Test Run 2	2	17.1	62000	99.97
	3	15.3	59000	99.97
	4	15.3	60000	99.97
3/5/92	1	14.2	58000	99.98
Test Run 3	2	15.6	55000	99.97
	3	16.5	59000	99.97
	4	14.1	57000	99.98
3/12/92	1	17.7	62000	99.97
Test Run 4	2	16.2	60000	99.97
	3	16.3	60000	99.97
	4	18.0	61000	99.97

[a]CO concentrations at stack conditions from PDAR stack CO.

[b]CO_2 concentrations from Orsat analyses.

[c]Comb. Eff = $\frac{[CO_2]}{[CO_2] + [CO]} \times 100\%$

average combustion efficiencies be greater than or equal to 99.9% was met through each test run.

5.2.3 Rocket Feed Rate

The DFS was set up to operate at a maximum steady state feed rate of 38 rockets per hour if optimum system operation was maintained. The actual average rocket feed rates as recorded by the PDAR system were between 30 and 33 rockets per hour. The PDAR average feed rate is the actual steady state feed rate achieved during normal operations. The planned stoppages and unplanned minor delays resulted in the PDAR system showing average rocket feed rates of 30.8, 33.1, 32.6, and 30.0 rockets per hour for tests 1 through 4 respectively.

5.2.4 Orsat

Orsat data are presented in Table 5-4.

5.2.5 Chemical Agent

No agent was detected during the trial burn. The concentration of agent VX in the stack gas was measured by ACAMS and the maximum limit of quantitation was 0.000078 mg/m^3 during the four test runs. The limit was determined as a multiple of the ASC and the highest ACAMS LOQ during the test (see Table 2-7). In addition, all process samples were analyzed for agent, and no VX was detected at or above the Drinking Water Standard of 20 ppb.

5.3 Categories of Analytical Data

The analytical data for the DFS trial burn are tabulated in this section according to type of analysis as follows:

> The results of the determinations of semivolatile organic compounds include those from the analysis of MM5 samples, process liquids, and ash samples for PCBs, PCDD/F, and other semivolatile organic compounds.
>
> The results of the determinations of nitroglycerin were obtained from the analyses of the STEM samples.
>
> The results of the determinations of volatile organic compounds were obtained from the analyses of both VOST tubes and liquid-process samples.
>
> The results of the anion determinations include HCl and HF concentrations that were measured in the stack with the M5AT, as well as Cl^-, F^- and PO_4^{-3} concentrations in the process samples.
>
> The data from the determinations of metals include the results for 20 elements in the stack (from the MMT) and for 17 elements in the process samples (liquid and salt).
>
> THC concentrations were measured by CEM.

TABLE 5-4. INTEGRATED ORSAT DATA

Date	Time	Carbon Dioxide (% Vol.)	Oxygen (% Vol.)	Carbon Monoxide (% Vol.)	Nitrogen (% Vol.)
3/4/92	0835 - 0935	5.6	14.0	0.0	80.4
	0936 - 1201	5.6	13.6	0.0	80.8
	1255 - 1355	5.6	14.0	0.0	80.4
	1357 - 1457	5.6	13.9	0.0	80.5
3/5/92	0830 - 0930	6.2	13.0	0.0	80.8
	0930 - 1030	6.2	12.8	0.0	81.0
	1055 - 1155	5.9	13.2	0.0	80.9
	1147 - 1247	6.0	13.1	0.0	80.9
3/5/92	1555 - 1655	5.8	13.3	0.0	80.9
	1657 - 1824	5.5	13.3	0.0	81.2
	2030 - 2130	5.9	13.0	0.0	81.1
	2145 - 2245	5.7	13.0	0.0	81.3
3/12/92	1350 - 1517	6.2	13.2	0.0	80.6
	1530 - 1630	6.0	13.0	0.0	81.0
	1750 - 1911	6.0	13.1	0.0	80.9
	1915 - 2015	6.1	13.1	0.0	80.8

The pH measurements were obtained only for the liquid-process samples.

Measurements of particulate mass were made on samples from the MMT and AT.

Measurements of particle-size distributions were performed with cascade impactors.

5.3.1 Results from the Determinations of Semivolatile Organics

The conditions that prevailed during the collection of samples in the MM5 sampling train are delineated in Table 5-5. The table gives details of the train operating parameters and leak checks.

Example of calculations are shown below:

MM5 Train (PCBs)
Total Tetra-PCBs (SRI Sample No. V04776)

$$\text{Amount (Tetra-PCBs)} = \frac{\text{Area (Tetra PCBs)}}{\text{Area (Internal Standard)}} \cdot \frac{\text{Amount (Internal Standard)}}{\text{RRF}}$$

$$= \frac{359}{2502} \cdot \frac{8\ \text{ng}}{0.810}$$

$$= 1.42\ \text{ng}$$

1/10 of sample taken for analysis.

$$= 1.42\ \text{ng} \times 10 = 14.2\ \text{ng}$$

MM5 Train (PCDD/Fs)
1,2,3,4,7,8,9-HpCDF (SRI Sample No. B04833)
Target analyte

$$\text{Amount (HpCDF)} = \frac{\text{Area (HpCDF)}}{\text{Area (Internal Standard)}} \cdot \frac{\text{Amount (Internal Standard)}}{\text{RRF}}$$

$$= \frac{369}{2007} \cdot \frac{2\ \text{ng}}{1.515}$$

$$= 0.243\ \text{ng}$$

TABLE 5-5. MM5 TRAIN SAMPLING AND PCB RESULTS

Parameter	Units	Run 1	Run 2	Run 3	Run 4
Date	--	3/4/92	3/5/92	3/5/92	3/12/92
Sample Time	minutes	240	240	240	240
Sample Volume	dscf	217.880	217.915	203.299	210.197
Stack Gas Flow Rate	dscfm	12161	11404	11370	11907
Stack Gas Temperature	°F	181	181	180	181
Stack Gas Moisture	% volume	38.5	41.9	37.5	39.0
Percent Isokinetic		95.6	102.0	95.4	94.2
PCB Catch[a]	ng	15.2	22.4	148	38.6
PCB Emission Rate	lb/hr	1.12×10^{-7}	1.55×10^{-7}	1.09×10^{-6}	2.89×10^{-7}
Oxygen Concentration	%	13.9	13.0	13.2	13.1
CO_2 Concentration	%	5.6	6.1	5.7	6.1
Leak Checks:					
Pitot Pretest		pass	pass	pass	pass
Pitot Post-test		pass	pass	pass	pass
Train Pretest	cfm at in. Hg	0.000 15	0.000 16	0.000 17	0.000 15
Train Post-test	cfm at in. Hg	0.000 15	0.000 18	0.000 19	0.000 19

[a]After blank correction.

MM5 Train (PCDD/Fs)
Total HpCDF (SRI Sample No. V04833)

$$\text{Amount (HpCDFs)} = \frac{\text{Area (HpCDFs)}}{\text{Area (Internal Standard)}} \cdot \frac{\text{Amount (Internal Standard)}}{\text{AVG RRF}}$$

$$= \frac{(369)}{2367+2007} \cdot \frac{4\ \text{ng}}{1.9013}$$

$$= 0.177\ \text{ng}$$

Cyclone Ash
2,3,7,8-TCDF (SRI Sample No. V04928)
Target analyte

$$\text{Amount (TCDF)} = \frac{\text{Area (TCDF)}}{\text{Area (Internal Standard)}} \cdot \frac{\text{Amount (Internal Standard)}}{\text{RRF}}$$

$$= \frac{9910}{7659} \cdot \frac{2\ \text{ng}}{1.060}$$

$$= 2.44\ \text{ng}$$

$$\text{Concentration} = \frac{\text{Amount (TCDF)}}{\text{Weight of Sample}}$$

$$= \frac{2.44\ \text{ng}}{0.010\ \text{kg}} = 244\ \text{ng/kg}$$

Cyclone Ash (PCDD/Fs)
Total TCDFs (SRI Sample No. V04928)

$$\text{Amount (TCDFs)} = \frac{\text{Area (TCDFs)}}{\text{Area (Internal Standard)}} \cdot \frac{\text{Area (Internal Standard)}}{\text{RRF}}$$

$$= \frac{59739}{7659} \cdot \frac{2\ \text{ng}}{1.060}$$

$$= 14.72\ \text{ng}$$

$$\text{Concentration} = \frac{\text{Amount (TCDFs)}}{\text{Weight of Sample}}$$

$$= \frac{14.72\ \text{ng}}{0.010\ \text{kg}}$$

$$= 1472\ \text{ng/kg}$$

Scrubber Liquor (PCDD/Fs)
Total HxCDFs (SRI Sample No. V04850)

$$\text{Amount (HxCDFs)} = \frac{\text{Area (HxCDFs)}}{\text{Area (Internal Standard)}} \cdot \frac{\text{Amount (Internal Standard)}}{\text{AVG RRF}}$$

$$= \frac{1871}{50055} \cdot \frac{8\ \text{ng}}{1.973}$$

$$= 0.1516$$

$$\text{Concentration} = \frac{\text{Amount (HxCDF)}}{\text{Volume of Sample}}$$

$$= \frac{0.1516\ \text{ng}}{0.474\ \text{L}}$$

$$= 0.32\ \text{ng/kg}$$

MM5 Train (BNA)
Octyl phthalate (OP) (SRI Sample No. H01233)

$$\text{Amount (OP)} = \frac{\text{Area (OP)}}{\text{Area (Internal Standard)}} \cdot \frac{\text{Amount (Internal Standard)}}{\text{RRF}}$$

$$= \frac{3001507}{3142603} \cdot \frac{40\ \mu\text{g}}{1.483}$$

$$= 25.8\ \mu\text{g}$$

Caustic (BNA)
Octyl phthalate (OP) (SRI Sample No. H01106)

$$\text{Amount (OP)} = \frac{\frac{\text{Area (OP)}}{\text{Area (Internal Standard)}} \cdot \frac{\text{Amount (Internal Standard)}}{\text{RRF}}}{\text{Volume Samples}}$$

$$= \frac{10271093}{2446228} \cdot \frac{40\ \mu\text{g}}{1.483} \cdot \frac{2}{0.482\ \text{L}}$$

$$= 470\ \mu\text{g/L}$$

Table 5-6 summarizes the PCB results, and Table 5-7 summarizes the PCDD/F results. Table 5-8 gives the results for target PCDD/F compounds from stack gas samples. Levels of PCDD/F found in the stack gas approached the method limit of detection. The rotary-kiln influent for this trial burn contained only trace amounts of chlorinated compounds; hence, the formation of significant amounts of PCDD/F in the process was not expected. The cyclone ash and HDC ash composite sample extracts, however, contained significant amounts of TCDF, TCDD, PECDF, HXCDF, and HPCDF. Table 5-9 gives the results for target PCDD/F compounds and Table 5-10 summarizes the PCDD/F results for ash samples. The 2,3,7,8-tetrachlodibenzo-p-dioxin toxicity-equivalence (TE) values for MM5 and ash samples are presented in Tables 5-7 and 5-9 respectively. TE is the concentration of 2,3,7,8-TCDD that yields the same

TABLE 5-6. DETERMINATION OF PCBS IN TRAINS FROM DFS

Sample Description	SRI Sample No.	Amount found (nanograms)											
		Mono-PCB	Di-PCB	Tri-PCB	Tetra-PCB	Penta-PCB	Hexa-PCB	Hepta-PCB	Octa-PCB	Nona-PCB	Deca-PCB	Field surrogate[a] (% recov.)	Laboratory surrogate[b] (% recov.)
Quality-Control Analyses													
Lab Blank No. 1	V04769	ND[c]	ND	ND	ND	ND	ND	ND	ND	ND	ND	NA[d]	776 (80.0%)
Lab Blank No. 2	V04776	ND	ND	ND	14.2	144	185	18.5	ND	ND	ND	NA	674 (69.5%)
Lab Blank No. 4	V04789	ND	ND	ND	ND	ND	ND	ND	ND	ND	ND	NA	522 (53.8%)
Trip blank	V04771	ND	ND	ND	7.2	41.9	20.3	ND	ND	ND	ND	988 (98.8%)	712 (73.4%)
Blank train and front wash	V04790	ND	ND	ND	ND	ND	ND	ND	ND	ND	ND	NA	306 (31.6%)
Blank train and back wash	V04778	ND	ND	ND	8.4	8.0	10.1	ND	ND	ND	ND	1,080 (108%)	667 (68.7%)
Test Run 1 filter and solvent blank	V04770	ND	ND	ND	ND	ND	ND	ND	ND	ND	ND	NA	800 (82.5%)
Test Run 1 field and water blank	V04774	ND	37.9	4.5	4.9	ND	ND	ND	ND	ND	ND	1,200 (120%)	808 (83.8%)
Test Run 4 filter and solvent blank	V04775	ND	ND	ND	ND	ND	ND	ND	ND	ND	ND	NA	572 (59.0%)
Test Run 4 field and water blank	V04785	ND	ND	ND	5.8	10.3	ND	ND	ND	ND	ND	852 (85.2%)	786 (81.0%)
XAD matrix spike	V04784	48.0 (96%)	ND	ND	ND	44.7 (89.4%)	ND	ND	ND	ND	42.5 (85%)	NA	684 (70.5%)
XAD matrix spike duplicate	V04783	21.7 (42.4%)	ND	ND	ND	45.4 (90.8%)	ND	ND	ND	ND	40.2 (80.4%)	NA	712 (73.4%)

TABLE 5-6. Continued

Sample Description	SRI Sample No.	Amount found (nanograms)											
		Mono-PCB	Di-PCB	Tri-PCB	Tetra-PCB	Penta-PCB	Hexa-PCB	Hepta-PCB	Octa-PCB	Nona-PCB	Deca-PCB	Field surrogate[a] (% recov.)	Laboratory surrogate[b] (% recov.)
		Sample Analyses											
Test Run 1 front half (filter and wash	V04779	ND	ND	ND	ND	ND	ND	ND	ND	ND	ND	NA	312 (32.1%)
Test Run 1 back half (resin and wash	V04780	ND	ND	8.4	ND	45.8	23.2	ND	ND	ND	ND	541 (54.1%)	498 (51.3%)
Test Run 2 front half (filter and wash)	V04773	ND	ND	ND	ND	ND	ND	ND	ND	ND	ND	NA	701 (72.3%)
Test Run 2 back half (resin and wash)	V04787	ND	ND	6.0	16.4	27.3	12.7	7.2	ND	ND	ND	1,021 (102%)	833 (85.9%)
Test Run 3 front half (filter and wash)	V04777	ND	ND	ND	ND	8.0	ND	ND	ND	ND	ND	NA	595 (61.3%)
Test Run 3 back half (resin and wash)	V04786	ND	ND	ND	39.6	89.6	71.3	8.4	ND	ND	ND	896 (89.6%)	810 (83.5%)
Test Run 4 front half (filter and wash)	V04772	ND	ND	ND	ND	ND	ND	ND	ND	ND	ND	NA	822 (84.7%)
Test Run 4 back half (resin and wash)	V04788	ND	ND	6.7	14.3	53.4	33.6	ND	ND	ND	ND	630 (63.0%)	671 (69.1%)

[a]The field surrogate is 13C12-decachlorobiphenyl.
[b]The laboratory surrogate is octachloronaphthalene.
[c]ND = Not detected above reporting limit of 4 ng.
[d]NA = Not applicable (sample not spiked).

TABLE 5-7. DETERMINATION OF TOTAL PCDFS/PCDDS IN MM5 TRAINS FROM DFS

		Amount found (nanograms)										
Sample Description	SRI Sample No.	TCDF	TCDD	PECDF	PECDD	HXCDF	HXCDD	HPCDF	HPCDD	OCDF	OCDD	2,3,7,8-TCDD Toxicity Equivalent
					Quality Control Analyses							
Lab Blank No. 1	V04806	ND[a]	ND	ND	ND	ND	ND	ND	ND	ND	ND	NR[c]
Lab Blank No. 2	V04821	ND	ND	ND	ND	ND	ND	ND	ND	ND	ND	NR
Lab Blank No. 4	V04835	ND	ND	ND	ND	ND	ND	ND	ND	ND	ND	NR
Trip blank	V04833	ND	ND	ND	ND	ND	ND	0.18	ND	ND	ND	0.002
Blank train filter and front wash	V04812	ND	ND	ND	ND	ND	ND	ND	ND	ND	ND	NR
Blank train resin and back wash	V04813	ND	ND	ND	ND	ND	ND	ND	ND	ND	ND	0.001
Test Run 1 filter and solvent blank	V04811	ND	ND	ND	ND	ND	ND	ND	ND	ND	ND	NR
Test Run 1 field resin and water blank	V04810	ND	ND	ND	ND	ND	ND	ND	ND	ND	ND	0.001
Test Run 4 filter and solvent blank	V04827	ND	ND	ND	ND	ND	ND	ND	ND	ND	ND	NR
Test Run 4 field resin and water blank	V04826	ND	ND	ND	ND	ND	ND	0.10	ND	ND	ND	0.001
XAD-2 matrix spike	V04837	(93%)[b]	(92%)	(89%)	(110%)	(100%)	(89%)	(99%)	(110%)	(155%)	(111%)	
XAD-2 matrix spike duplicate	V04836	(96%)	(98%)	(101%)	(100%)	(106%)	(93%)	(109%)	(102%)	(116%)	(110%)	

TABLE 5-7. Continued

Sample Description	SRI Sample No.	Amount found (nanograms)										
		TCDF	TCDD	PECDF	PECDD	HXCDF	HXCDD	HPCDF	HPCDD	OCDF	OCDD	2,3,7,8-TCDD Toxicity Equivalent
		Sample Analyses										
Test Run 1 filter and front wash	V04822	ND	ND	ND	ND	ND	ND	ND	ND	ND	0.25	0.0002
Test Run 1 resin and back wash	V04823	0.06	ND	0.77	0.17	0.99	0.56	0.43	0.71	ND	0.75	0.124
Test Run 2 filter and front wash	V04834	ND	ND	ND	ND	ND	ND	ND	ND	ND	ND	NR
Test Run 2 resin and back wash	V04825	ND	ND	0.10	ND	0.16	0.22	0.30	0.36	ND	0.45	0.005
Test Run 3 filter and front wash	V04809	ND	ND	ND	ND	ND	ND	ND	ND	ND	ND	NR
Test Run 3 resin and back wash	V04808	0.02	0.03	ND	ND	ND	ND	ND	ND	ND	0.40	0.002
Test Run 4 filter and front wash	V04824	ND	ND	ND	ND	ND	ND	ND	ND	ND	ND	NR
Test Run 4 resin and back wash	V04828	ND	0.04	ND	ND	ND	ND	ND	ND	ND	ND	NR

[a]ND = Not detected above reporting limit of 0.02 ng for TCDFs and TCDDs; 0.10 ng for PECDFs, PECDDs, HXCDFs, HXCDDs, HPCDFs, and HPCDDs; and 0.20 ng for OCDFs and OCDDs.

[b]The percent recovery of spiked components is enclosed in parentheses.

[c]NR = Not reported, no value can be calculated.

6/22/92

TABLE 5-8. DETERMINATION OF TARGET PCDFS/PCDDS IN MM5 TRAINS FROM DFS

Sample Description	SRI Sample No.	Amount found (nanograms)																	
		2,3,7,8-TCDF	2,3,7,8-TCDD	1,2,3,7,8-PECDF	2,3,4,7,8-PECDF	1,2,3,7,8-PECDD	1,2,3,4,7,8-HXCDF	1,2,3,6,7,8-HXCDF	1,2,3,7,8,9-HXCDF	2,3,4,6,7,8-HXCDF	1,2,3,4,7,8-HXCDD	1,2,3,6,7,8-HXCDD	1,2,3,7,8,9-HXCDD	1,2,3,4,6,7,8-HPCDF	1,2,3,4,7,8,9-HPCDF	1,2,3,4,6,7,8-HPCDD	OCDF	OCDD	Surrogate[a] (% recov)
Quality Control Analyses																			
Lab Blank No. 1	V04806	ND[b]	ND	ND	ND	ND	ND	ND	ND	ND	ND	ND	ND	ND	ND	ND	ND	ND	0.902 (113%)
Lab Blank No. 2	V04821	ND	ND	ND	ND	ND	ND	ND	ND	ND	ND	ND	ND	ND	ND	ND	ND	ND	0.318 (40%)
Lab Blank No. 4	V04835	ND	ND	ND	ND	ND	ND	ND	ND	ND	ND	ND	ND	ND	ND	ND	ND	ND	0.231 (29%)
Test Run 1 Trip blank	V04833	ND	ND	ND	ND	ND	ND	ND	ND	ND	ND	ND	ND	ND	0.24	ND	ND	ND	0.351 (17.6%)
Blank train filter and front wash	V04812	ND	ND	ND	ND	ND	ND	ND	ND	ND	ND	ND	ND	ND	ND	ND	ND	ND	0.251 (31%)
Blank train resin and back wash	V04813	ND	ND	ND	ND	ND	ND	ND	ND	ND	ND	ND	ND	ND	0.12	ND	ND	ND	1.36 (68.0%)
Test Run 1 filter and solvent blank	V04811	ND	ND	ND	ND	ND	ND	ND	ND	ND	ND	ND	ND	ND	ND	ND	ND	ND	0.530 (66%)
Test Run 1 field blank resin and water blank	V04810	ND	ND	ND	ND	ND	ND	ND	ND	ND	ND	ND	ND	ND	0.11	ND	ND	ND	0.561 (28.1%)
Test Run 4 filter and solvent blank	V04827	ND	ND	ND	ND	ND	ND	ND	ND	ND	ND	ND	ND	ND	ND	ND	ND	ND	0.595 (74%)
Test Run 4 field blank resin and water blank	V04826	ND	ND	ND	ND	ND	ND	ND	ND	ND	ND	ND	ND	ND	0.14	ND	ND	ND	0.156 (8.0%)
XAD-2 matrix spike	V04837	0.742 (93%)	0.733 (92%)	3.65 (85%)	3.75 (94%)	4.42 (110%)	3.84 (96%)	3.85 (86%)	3.26 (82%)	5.42 (135%)	9.36 (109%)	3.48 (87%)	2.77 (71%)	3.91 (98%)	4.03 (101%)	4.40 (110%)	12.4 (155%)	8.89 (111%)	0.220 (27%)
XAD-2 matrix spike duplicate	V04836	0.76 (96%)	0.79 (98%)	3.93 (98%)	4.18 (104%)	4.01 (100%)	3.97 (99%)	4.39 (110%)	3.94 (98%)	4.62 (115%)	3.84 (96%)	3.98 (99%)	3.34 (83%)	4.19 (105%)	4.55 (114%)	4.07 (102%)	9.30 (116%)	8.83 (110%)	0.367 (46%)

TABLE 5-8 . Continued

Sample Description	SRI Sample No.	Amount found (nanograms)																	
		2,3,7,8-TCDF	2,3,7,8-TCDD	1,2,3,7,8-PECDF	2,3,4,7,8-PECDF	1,2,3,7,8-PECDD	1,2,3,4,7,8-HXCDF	1,2,3,6,7,8-HXCDF	1,2,3,7,8,9-HXCDF	2,3,4,6,7,8-HXCDF	1,2,3,4,7,8-HXCDD	1,2,3,6,7,8-HXCDD	1,2,3,7,8,9-HXCDD	1,2,3,4,6,7,8-HPCDF	1,2,3,4,7,8,9-HPCDF	1,2,3,4,6,7,8-HPCDD	OCDF	OCDD	Surrogate[a] (% recov)
		Sample Analyses																	
Test Run 1 filter and front wash	V04822	ND	ND	ND	ND	ND	ND	ND	ND	ND	ND	ND	ND	ND	ND	ND	ND	0.25	0.197 (25%)
Test Run 1 resin and back wash	V04823	ND	ND	ND	0.15	ND	0.14	ND	ND	0.18	ND	ND	0.10	ND	0.24	0.37	ND	0.75	0.255 (12.2%)
Test Run 2 filter and front wash	V04834	ND	ND	ND	ND	ND	ND	ND	ND	ND	ND	ND	ND	ND	ND	ND	ND	ND	0.698 (87%)
Test Run 2 resin and back wash	V04825	ND	ND	ND	ND	ND	ND	ND	ND	ND	ND	ND	ND	ND	0.24	0.20	ND	0.45	0.850 (42.5%)
Test Run 3 filter and front wash	V04809	ND	ND	ND	ND	ND	ND	ND	ND	ND	ND	ND	ND	ND	ND	ND	ND	ND	0.721 (90%)
Test Run 3 resin and back wash	V04808	ND	ND	ND	ND	ND	ND	ND	ND	ND	ND	ND	ND	ND	0.13	ND	ND	0.60	1.69 (84.5%)
Test Run 4 filter and front wash	V04824	ND	ND	ND	ND	ND	ND	ND	ND	ND	ND	ND	ND	ND	ND	ND	ND	ND	0.630 (79%)
Test Run 4 resin and back wash	V04828	ND	ND	ND	ND	ND	ND	ND	ND	ND	ND	ND	ND	ND	ND	ND	ND	ND	0.811 (40.5%)

[a]The surrogate is 37Cl4-2,3,7,8,-tetrachlorodibenzo[1,4]dioxin. Resin samples (V04813, V04810, V04826, V04823, V04825, V04808, and V04828) were spiked with 2.0 ng of the surrogate; the remaining samples were spiked with 0.8 ng of the same surrogate.

[b]ND = Not detected above reporting limit of 0.02 ng for TCDFs and TCDDs; 0.10 ng for PECDFs, PECDDs, HXCDFs, HXCDDs, HPCDFs, and HPCDDs; and 0.20 ng for OCDF and OCDD.

TABLE 5-9. DETERMINATION OF TARGET PCDFS/PCDDS IN ASH FROM DFS

Sample Description	SRI Sample No.	Amount found (ng/kg)																
		2,3,7,8-TCDF	2,3,7,8-TCDD	1,2,3,7,8-PECDF	2,3,4,7,8-PECDF	1,2,3,7,8-PECDD	1,2,3,4,7,8-HXCDF	1,2,3,6,7,8-HXCDF	1,2,3,7,8,9-HXCDF	2,3,4,6,7,8-HXCDF	1,2,3,4,7,8-HXCDD	1,2,3,6,7,8-HXCDD	1,2,3,7,8,9-HXCDD	1,2,3,4,6,7,8-HPCDF	1,2,3,4,7,8,9-HPCDF	1,2,3,4,6,7,8-HPCDD	OCDF	OCDD
Lab Blank No. 1	V04910	ND[a]	ND	ND	ND	ND	ND	ND	ND	ND	ND	ND	ND	ND	ND	ND	ND	ND
Lab Blank No. 2	V04923	ND	ND	ND	ND	ND	ND	ND	ND	ND	ND	ND	ND	ND	ND	ND	ND	ND
Test Run 1 Cyclone (Matrix Spike)	V04929	276 (36.9%)[b]	99.3 (123%)	412 (93.2%)	42.3 (94.9%)	415 (104%)	430 (103%)	427 (105%)	408 (102%)	460 (114%)	397 (99.1%)	415 (103%)	416 (104%)	440 (110%)	405 (101%)	430 (107%)	770 (96.1%)	809 (101%)
Test Run 1 Cyclone (Matrix Spike Duplicate)	V04930	268 (29.3%)	97.2 (120%)	421 (95.4%)	448 (101%)	42.3 (106%)	428 (103%)	424 (104%)	420 (105%)	462 (115%)	413 (103)	424 (106%)	419 (104%)	446 (110%)	410 (102%)	425 (106%)	763 (95.2%)	795 (99.1%)
Test Run 3 HDC (Matrix Spike)	V04916	157 (165%)	87.5 (109%)	423 (105%)	461 (113%)	441 (110%)	456 (110%)	452 (111%)	385 (96.3%)	409 (101%)	445 (111%)	386 (96.4%)	300 (74.8%)	543 (136%)	416 (104%)	451 (112%)	1125 (140%)	889 (111%)
Test Run 3 HDC (Matrix Spike Duplicate)	V04917	133 (135%)	93.7 (117%)	415 (102%)	486 (119%)	430 (107%)	454 (110%)	452 (112%)	424 (106%)	378 (93.1%)	442 (110%)	393 (98.2%)	441 (110%)	601 (147%)	417 (103%)	446 (110%)	861 (107%)	905 (113%)
Test Run 1 Cyclone	V04928	244	ND	39.6	43.7	ND	165	ND	ND	ND	ND	ND	ND	ND	ND	ND	ND	ND
Test Run 2 Cyclone	V04925	207	ND	32.8	37.4	ND	14.1	ND	ND	ND	ND	ND	ND	ND	8.11	ND	ND	ND
Test Run 3 Cyclone	V04926	204	ND	51.5	39.8	ND	21.2	ND	ND	ND	ND	ND	ND	ND	ND	ND	ND	ND
Test Run 4 Cyclone	V04927	241	ND	64.6	50.1	ND	31.4	ND	ND	ND	ND	ND	ND	ND	0.14	ND	ND	ND
Test Run 1 HDC	V04913	ND	ND	ND	ND	ND	ND	ND	ND	ND	ND	ND	ND	ND	ND	ND	ND	ND
Test Run 2 HDC	V04924	ND	ND	ND	ND	ND	11.3	ND	ND	ND	ND	ND	ND	12.2	ND	ND	ND	ND
Test Run 3 HDC	V04915	ND	ND	ND	ND	ND	14.0	ND	ND	ND	ND	ND	ND	13.9	ND	ND	ND	ND
Test Run 4 HDC	V04918	ND	ND	ND	ND	ND	10.7	ND	ND	ND	ND	ND	ND	ND	ND	ND	ND	ND

[a]ND = Not detected above reporting limit of 2 ng/kg for TCDFs and TCDDs; 10 ng/kg for PECDFs, PECDDs, HXCDFs, HXCDDs, HPCDFs, and HPCDDs; and 20 ng/kg for OCDF and OCDD.

[b]The percent recovery of spiked components is enclosed in parentheses.

TABLE 5-10. DETERMINATION OF TOTAL PCDFS/PCDDS IN ASH SAMPLES FROM DFS

Sample Description	SRI Sample No.	Concentration found (ng/kg)										
		TCDF	TCDD	PECDF	PECDD	HXCDF	HXCDD	HPCDF	HPCDD	OCDF	OCDD	2,3,7,8-TCDD Toxicity Equivalent
SRI Blank 1	V04910	ND[a]	ND	ND	ND	ND	ND	ND	ND	ND	ND	NR[c]
SRI Blank 2	V04923	ND	ND	ND	ND	ND	ND	ND	ND	ND	ND	NR
Test Run 1 Cyclone (Matrix Spike)	V04929	(36.9%)[b]	(123%)	(94.0%)	(103%)	(106%)	(102%)	(105%)	(107%)	(96.1%)	(101%)	
Test Run 1 Cyclone (Matrix Spike Duplicate)	V04930	(29.3%)	(120%)	(98.2%)	(105%)	(106%)	(104%)	(106%)	(106%)	(95.2%)	(99.1%)	
Test Run 3 HDC (Matrix Spike)	V04916	(165%)	(109%)	(109%)	(110%)	(105%)	(94%)	(118%)	(112%)	(140%)	(111%)	
Test Run 3 HDC (Matrix Spike Duplicate)	V04917	(135%)	(117%)	(111%)	(107%)	(105%)	(106%)	(125%)	(111%)	(107%)	(113%)	
Test Run 1 Cyclone	V04928	1470	49.9	339	ND	31.7	ND	ND	ND	ND	ND	49.9
Test Run 2 Cyclone	V04925	1078	22.2	272	ND	36.0	ND	ND	ND	ND	ND	42.4
Test Run 3 Cyclone	V04926	1268	47.2	391	ND	53.8	ND	ND	ND	ND	ND	44.9
Test Run 4 Cyclone	V04927	1501	103	513	ND	78.7	ND	ND	ND	ND	ND	55.5
Test Run 1 HDC	V04913	116	4.86	49.0	ND	22.1	ND	10.0	ND	ND	ND	NR
Test Run 2 HDC	V04924	41.9	ND	34.0	ND	31.1	ND	21.4	ND	ND	ND	1.25
Test Run 3 HDC	V04915	102	ND	64.1	ND	47.6	ND	23.8	ND	ND	ND	1.55
Test Run 4 HDC	V04918	67.7	ND	46.6	ND	32.4	ND	14.2	ND	ND	ND	1.07

[a]ND = Not detected above reporting limit of 2 ng/kg for TCDFs and TCDDs; 10 ng/kg for PECDFs, PECDDs, HXCDFs, HXCDDs, HPCDFs, and HPCDDs; and 20 ng/kg for OCDFs and OCDDs.

[b]The percent recovery of spiked components is enclosed in parentheses.

[c]Not reported, no value can be calculated.

toxicity as the mixture of PCDD/Fs that were found in the samples. The TE can be calculated as:

TE = 1.00 [2,3,7,8-TCDD] + 0.10 [2,3,7,8-TCDF] + 0.5 ([1,2,3,7,8-PeCDD] + [2,3,4,7,8-PeCDD]) + 0.05 [1,2,3,7,8-PeCDF] + 0.1 ([1,2,3,4,7,8-HxCDD] + [1,2,3,6,7,8-HxCDD] + [1,2,3,7,8,9-HxCDD] + [1,2,3,4,7,8-HxCDF] + [1,2,3,6,7,8-HxCDF] + [2,3,4,6,7,8-HxCDF]) + 0.01 ([1,2,3,4,6,7,8-HpCDD] + [1,2,3,4,6,7,8-HpCDF] + [1,2,3,4,7,8,9-HpCDF]) + 0.001 ([OCDD]+[OCDF])

The factors used to calculate TE were taken from "Update of Toxicity Equivalency Factors (TEFs) for Estimating Risks Associated with Exposures to Mixtures of Chlorinated Dibenzo-p-Dioxins and Dibenzofurans (CDDs/CDFs)," March 1989, (EPA 625/3-89/-16). Guidance from EPA indicates that only actual values, and not detection limits, should be used in a TE calculation. Consequently, no TE results are reported for samples with no detected PCDD/Fs. Even in the samples that contained PCDD/Fs, the levels of such substances were close to the detection limits.

The results of the determination of PCBs in MM5 samples are shown in Table 5-6. Various tri- through hepta-PCBs were found in the MM5 train (back-half) resin and wash samples generated in all four test runs. Little or no PCBs were detected in the filter and wash portions of each train (front-half). The recoveries of laboratory surrogates and matrix spikes were satisfactory, as shown in Table 5-6. The presence of PCBs in four of the seven field blanks but in only one of the three laboratory blanks suggests spurious contamination of some of the blanks. The laboratory blank that was contaminated with PCBs displayed a pattern of PCB components different from that detected in the samples. (In the one contaminated laboratory blank, the hexa-PCB is present in the highest concentration, whereas in each of the four MM5 train samples, the penta-PCB is present in the highest concentration.)

Table 5-11 summarizes the results of the determinations of the other semivolatile compounds. Low levels of benzyl alcohol, benzoic acid, 2-methylphenol, and 4-methylphenol were found in MM5 samples from each of the four runs. However, these compounds were also present in the blank train and in field blanks. In addition, some of the sample-train extracts, including those from the blank sample train, contained one or more phthalate esters. Phthalate esters are used as plasticizers and are found in almost all types of samples at various levels. Appendices H and J give data sheets from the GC/MS analyses that were performed for determining the PCDD/Fs and other semivolatile analytes. The samples of process liquids (water, liquor, brine, and caustic), and fuel oil were analyzed for PCDD/Fs. Tables 5-12, 5-13, 5-14, 5-15, and 5-16 give the results of these analyses. The only PCDD/Fs that were detected were small amounts of HXCDF and HXCDD in scrubber liquor for Trial Burn 2 pretest. The levels that were found were at the operating limit of the method and appear to be due to contamination from a matrix spike sample (i.e., a sample that contained low levels of target compounds only); therefore, no toxic equivalent value is calculated.

Tables 5-17, 5-18, 5-19, and 5-20 summarize the results of the analyses of these media for the semivolatile compounds in the four runs, and the corresponding results from the laboratory blanks are listed in the same table. Low levels of the plasticizer bis-(2-ethylhexyl)phthalate were present in some of

TABLE 5-11. SEMIVOLATILE RESULTS SUMMARY FOR TEST RUN MM5 TRAINS

Sample Description	SRI Run No.	Compound	Amount, µg
		Quality Control Analyses	
Lab Blank No. 1	H01229	Benzyl alcohol	912
		2-Methylphenol	40.1
		4-Methylphenol	17.2
Lab Blank No. 2	H01245	Benzyl alcohol	1510
		Benzoic acid	107
		2-Nitroaniline	11.7
Lab Blank No. 4	H01240	Benzyl alcohol	791
Trip blank	H01235	Benzyl alcohol	138
		2,4-Dimethylphenol	40.6
		Benzoic acid	92.6
Blank train filter and front wash	H01231	Benzyl alcohol	395
Blank train resin and back wash	H01230	Benzyl alcohol	1000
		2-Methylphenol	34.6
		4-Methylphenol	29.3
		Benzoic acid	42.8
		Dimethyl phthalate	7.1
		bis(2-Ethylhexyl) phthalate	24.0
Test Run 1 filter and solvent blank	H01253	Benzyl alcohol	448
Test Run 1 field and water blank	H01234	Benzyl alcohol	987
		Benzoic acid	129
Test Run 4 filter and solvent blank	H01243	Benzyl alcohol	198
		2-Methylphenol	45.9
		4-Methylphenol	37.8
		Benzoic acid	168
		bis(2-Ethylhexyl) phthalate	11.7
Test Run 4 field and water blank	H01244	Benzyl alcohol	290

TABLE 5-11. *Continued*

Sample Description	SRI Run No.	Compound	Amount, µg
		Sample Analyses	
Test Run 1 filter and front wash	H01233	Benzyl alcohol	1440
		Benzoic acid	188
		bis(2-Ethylhexyl) phthalate	25.8
Test Run 1 resin and back wash	H01232	Benzyl alcohol	2070
		2-Methylphenol	125
		4-Methylphenol	113
		Benzoic acid	571
		Dimethyl phthalate	447
		bis(2-Ethylhexyl) phthalate	50.0
Test Run 2 filter and front wash	H01250	Benzyl alcohol	813
		bis (2-Ethylhexyl) phthalate	90.2
Test Run 2 resin and back wash	H01246	Benzyl alcohol	1140
		2-Methylphenol	175
		4-Methylphenol	144
		Benzoic acid	164
		Dimethyl phthalate	370
		Diethyl phthalate	7.43
		bis(2-Ethylhexyl) phthalate	43.3
Test Run 3 filter and front wash	H01252	Benzyl alcohol	193
		Naphthalene	16.8
		bis(2-Ethylhexyl) phthalate	16.2
Test Run 3 resin and back wash	H01251	Benzyl alcohol	778
		2-Methylphenol	73.9
		4-Methylphenol	58.3
		Benzoic acid	201
		Dimethyl phthalate	336
		Di-n-butyl phthalate	10.4
		bis(2-Ethylhexyl) phthalate	25.1
Test Run 4 filter and front wash	H01242	Benzyl alcohol	111
Test Run 4 resin and back wash	H01241	Benzyl alcohol	384
		2-Methylphenol	40.0
		4-Methylphenol	34.6
		Benzoic acid	123
		Dimethyl phthalate	242
		bis(2-Ethylhexyl) phthalate	84.7

See Appendix J for surrogate recoveries and matrix spike results.
[a]ND = Not detected

TABLE 5-12. DETERMINATION OF TOTAL PCDFS/PCDDS IN PROCESS WATER SAMPLES FROM DFS

Sample Description	SRI Sample No.	Concentration found (ng/L)									
		TCDF	TCDD	PECDF	PECDD	HXCDF	HXCDD	HPCDF	HPCDD	OCDF	OCDD
SRI Blank	V04844	ND[a]	ND	ND	ND	ND	ND	ND	ND	ND	ND
SRI Blank	V04948	ND	ND	ND	ND	ND	ND	ND	ND	ND	ND
Test Run 3 Post Test (Matrix Spike)	V04851	(115%)	(114%)	(101%)	(104%)	(105%)	(93%)	(103%)	(104%)	(111%)	(100%)
Test Run 3 Post Test (Matrix Spike Duplicate)	V04852	(111%)	(121%)	(102%)	(106%)	(101%)	(107%)	(100%)	(109%)	(96%)	(98%)
Test Run 1 Pretest	V04839	ND	ND	ND	ND	ND	ND	ND	ND	ND	ND
Test Run 1 Post Test	V04848	ND	ND	ND	ND	ND	ND	ND	ND	ND	ND
Test Run 2 Pretest	V04858	ND	ND	ND	ND	ND	ND	ND	ND	ND	ND
Test Run 2 Post Test	V04845	ND	ND	ND	ND	ND	ND	ND	ND	ND	ND
Test Run 3 Pretest	V04847	ND	ND	ND	ND	ND	ND	ND	ND	ND	ND
Test Run 3 Post Test	V04846	ND	ND	ND	ND	ND	ND	ND	ND	ND	ND
Test Run 4 Pretest	V04939	ND	ND	ND	ND	ND	ND	ND	ND	ND	ND
Test Run 4 Post Test	V04940	ND	ND	ND	ND	ND	ND	ND	ND	ND	ND

[a]ND = Not detected above reporting limit of 0.04 ng/L for TCDFs and TCDDs; 0.20 ng/L for PECDFs, PECDDs, HXCDFs, HXCDDs, HPCDFs, and HPCDDs; and 0.40 ng/L for OCDFs and OCDDs.

[b]The percent recovery of spiked components is enclosed in parentheses.

TABLE 5-13. DETERMINATION OF TOTAL PCDFS/PCDDS IN SCRUBBER LIQUOR SAMPLES FROM DFS

Sample Description	SRI Sample No.	Concentration found (ng/L)									
		TCDF	TCDD	PECDF	PECDD	HXCDF	HXCDD	HPCDF	HPCDD	OCDF	OCDD
SRI Blank	V04857	ND	ND	ND	ND	ND	ND	ND	ND	ND	ND
SRI Blank	V04948	ND	ND	ND	ND	ND	ND	ND	ND	ND	ND
Test Run 3 Post Test (Matrix Spike)	V04864	(109%)[b]	(114%)	(107%)	(112%)	(106%)	(111%)	(105%)	(116%)	(105%)	(108%)
Test Run 3 Post Test (Matrix Spike Duplicate)	V04865	(113%)	(118%)	(108%)	(116%)	(107%)	(109%)	(108%)	(104%)	(132%)	(130%)
Test Run 1 Pretest	V04859	ND	ND	ND	ND	ND	ND	ND	ND	ND	ND
Test Run 1 Post test	V04861	ND	ND	ND	ND	ND	ND	ND	ND	ND	ND
Test Run 2 Pretest	V04850	ND	ND	ND	ND	0.32	0.22	ND	ND	ND	ND
Test Run 2 Post test	V04862	ND	ND	ND	ND	ND	ND	ND	ND	ND	ND
Test Run 3 Pretest	V04849	ND	ND	ND	ND	ND	ND	ND	ND	ND	ND
Test Run 3 Post test	V04863	ND	ND	ND	ND	ND	ND	ND	ND	ND	ND
Test Run 4 Pretest	V04953	ND	ND	ND	ND	ND	ND	ND	ND	ND	ND
Test Run 4 Post Test	V04954	ND	ND	ND	ND	ND	ND	ND	ND	ND	ND

[a]ND = Not detected above reporting limit of 0.04 ng/L for TCDFs and TCDDs; 0.20 ng/L for PECDFs, PECDDs, HXCDFs, HXCDDs, HPCDFs, and HPCDDs; and 0.40 ng/L for OCDFs and OCDDs.

[b]The percent recovery of spiked components is enclosed in parentheses.

TABLE 5-14. DETERMINATION OF TOTAL PCDFS/PCDDS IN BRINE SAMPLES FROM DFS

Sample Description	SRI Sample No.	Concentration found (ng/L)									
		TCDF	TCDD	PECDF	PECDD	HXCDF	HXCDD	HPCDF	HPCDD	OCDF	OCDD
SRI Blank	V04860	ND[a]	ND	ND	ND	ND	ND	ND	ND	ND	ND
SRI Blank	V04948	ND	ND	ND	ND	ND	ND	ND	ND	ND	ND
SRI Blank	V05078	ND	ND	ND	ND	ND	ND	ND	ND	ND	ND
Test Run 3 Post Test (Matrix Spike)	V05069	(128%)[b]	(115%)	(103%)	(109%)	(105%)	(106%)	(105%)	(109%)	(97.5%)	(102%)
Test Run 3 Post Test (Matrix Spike Duplicate)	V05068	(157%)	(134%)	(108%)	(113%)	(110%)	(107%)	(110%)	(112%)	(105%)	(106%)
Test Run 1 Pretest	V04871	ND	ND	ND	ND	ND	ND	ND	ND	ND	ND
Test Run 1 Post test	V05080	ND	ND	ND	ND	ND	ND	ND	ND	ND	ND
Test Run 2 Pretest	V04873	ND	ND	ND	ND	ND	ND	ND	ND	ND	ND
Test Run 2 Post test	V04876	ND	ND	ND	ND	ND	ND	ND	ND	ND	ND
Test Run 3 Pretest	V04877	ND	ND	ND	ND	ND	ND	ND	ND	ND	ND
Test Run 3 Post test	V04890	ND	ND	ND	ND	ND	ND	ND	ND	ND	ND
Test Run 4 Pretest	V04955	ND	ND	ND	ND	ND	ND	ND	ND	ND	ND
Test Run 4 Post Test	V04956	ND	ND	ND	ND	ND	ND	ND	ND	ND	ND

[a]ND = Not detected above reporting limit of 0.04 ng/L for TCDFs and TCDDs; 0.20 ng/L for PECDFs, PECDDs, HXCDFs, HXCDDs, HPCDFs, and HPCDDs; and 0.40 ng/L for OCDFs and OCDDs.

[b]the percent recovery of spiked components is enclosed in parentheses.

TABLE 5-15. DETERMINATION OF TOTAL PCDFS/PCDDS IN CAUSTIC SAMPLES FROM DFS

Sample Description	SRI Sample No.	Concentration found (ng/L)									
		TCDF	TCDD	PECDF	PECDD	HXCDF	HXCDD	HPCDF	HPCDD	OCDF	OCDD
SRI Blank	V04885	ND[a]	ND	ND	ND	ND	ND	ND	ND	ND	ND
Test Run 3 Post Test (Matrix Spike)	V04903	(110%)[b]	(112%)	(106%)	(107%)	(98.3%)	(103%)	(105%)	(106%)	(105%)	(103%)
Test Run 3 Post Test (Matrix Spike Duplicate)	V04904	(110%)	(107%)	(103%)	(104%)	(99.4%)	(104%)	(105%)	(109%)	(106%)	(101%)
Test Run 1 Pretest	V04886	ND	ND	ND	ND	ND	ND	ND	ND	ND	ND
Test Run 1 Post test	V04887	ND	ND	ND	ND	ND	ND	ND	ND	ND	ND
Test Run 2 Pretest	V04888	ND	ND	ND	ND	ND	ND	ND	ND	ND	ND
Test Run 2 Post test	V04891	ND	ND	ND	ND	ND	ND	ND	ND	ND	ND
Test Run 3 Pretest	V04889	ND	ND	ND	ND	ND	ND	ND	ND	ND	ND
Test Run 3 Post test	V04892	ND	ND	ND	ND	ND	ND	ND	ND	ND	ND
Test Run 4 Pretest	V04898	ND	ND	ND	ND	ND	ND	ND	ND	ND	ND
Test Run 4 Post Test	V04899	ND	ND	ND	ND	ND	ND	ND	ND	ND	ND

[a]ND = Not detected above reporting limit of 0.04 ng/L for TCDFs and TCDDs; 0.20 ng/L for PECDFs, PECDDs, HXCDFs, HXCDDs, HPCDFs, and HPCDDs; and 0.40 ng/L for OCDFs and OCDDs.

[b]The percent recovery of spiked components is enclosed in parentheses.

TABLE 5-16. DETERMINATION OF TOTAL PCDFS/PCDDS IN FUEL OIL SAMPLES FROM DFS

Sample Description	SRI Sample No.	Concentration found (ng/kg)									
		TCDF	TCDD	PECDF	PECDD	HXCDF	HXCDD	HPCDF	HPCDD	OCDF	OCDD
SRI Blank	V05039	ND[a]	ND	ND	ND	ND	ND	ND	ND	ND	ND
Test Run 3 Post Test (Matrix Spike)	V05043	(106%)[b]	(109%)	(98.6%)	(100%)	(113%)	(108%)	(106%)	(115%)	(101%)	(107%)
Test Run 3 Post Test (Matrix Spike Duplicate)	V05044	(123%)	(110%)	(98.8%)	(101.2%)	(115%)	(102%)	(103%)	(110%)	(108%)	(104%)
Test Run 1 Pretest	V05031	ND	ND	ND	ND	ND	ND	ND	ND	ND	ND
Test Run 1 Post test	V05033	ND	ND	ND	ND	ND	ND	ND	ND	ND	ND
Test Run 2 Pretest	V05034	ND	ND	ND	ND	ND	ND	ND	ND	ND	ND
Test Run 2 Post test	V05040	ND	ND	ND	ND	ND	ND	ND	ND	ND	ND
Test Run 3 Pretest	V05041	ND	ND	ND	ND	ND	ND	ND	ND	ND	ND
Test Run 3 Post test	V05042	ND	ND	ND	ND	ND	ND	ND	ND	ND	ND
Test Run 4 Pretest	V05045	ND	ND	ND	ND	ND	ND	ND	ND	ND	ND
Test Run 4 Post Test	V05046	NR[c]	NR	NR	NR	NR	NR	NR	NR	NR	NR

[a]ND = Not detected above reporting limit of 10 ng/kg for TCDFs and TCDDs; 50 ng/kg for PECDFs, PECDDs, HXCDFs, HXCDDs, HPCDFs, and HPCDDs; and 10 ng/kg for OCDFs and OCDDs.

[b]The percent recovery of spiked components is enclosed in parentheses.

[c]NR = Not reported. The recovery of surrogate compounds was very low (in some cases zero), therefore, the concentrations of target analytes were not calculated.

TABLE 5-17. SEMIVOLATILE RESULTS SUMMARY FOR TEST RUN 1

Sample ID	Run No.	Compound	Concentration
Lab blank (Scrubber brine)	H01073	--[a]	
Lab blank (Scrubber liquor)	H01059	--	
Lab blank (Process water)	H01090	--	
Lab blank (Caustic)	H01102	--	
Lab blank (Fuel oil)	H01350	--	
Lab blank (Ash 1)	H01315	Benzyl alcohol	40900 µg/Kg
Scrubber brine pretest	H01074	--	
Scrubber brine post-test	H01079	--	
Scrubber liquor pretest	H01060	bis(2-Ethylhexyl) phthalate	315 µg/L
Scrubber liquor post-test	H01061	--	
Process water pretest	H01093	--	
Process water post-test	H01094	--	
Caustic pretest	H01103	--	
Caustic post-test	H01104	--	
Fuel oil pretest	H01351	--	
Fuel oil post-test	H01352	--	
HDC Ash	H01316	Benzyl alcohol	113000 µg/kg
Cyclone Ash	H01329	Benzyl alcohol	39500 µg/kg

See Appendix J for surrogate recoveries and matrix spike results.

[a]None found.

TABLE 5-18. SEMIVOLATILE RESULTS SUMMARY FOR TEST RUN 2

Sample ID	Run No.	Compound	Concentration
Lab blank (Scrubber brine)	H01073	--[a]	
Lab blank (Scrubber liquor)	H01059	--	
Lab blank (Process water)	H01090	--	
Lab blank (Caustic)	H01102	--	
Lab blank (Fuel oil)	H01350	--	
Lab blank (HD Ash)	H01315	Benzyl alcohol	40900 µg/kg
Lab blank (Cyclone Ash)	H01329	Benzyl alcohol	56000 µg/kg
Scrubber brine pretest	H01080	--	
Scrubber brine post-test	H01081	--	
Scrubber liquor pretest	H01067	--	
Scrubber liquor post-test	H01068	--	
Process water pretest	H01095	--	
Process water post-test	H01096	--	
Caustic pretest	H01105	--	
Caustic post-test	H01106	bis(2-Ethylhexyl) phthalate	470 µg/L
Fuel oil pretest	H01353	--	
Fuel oil post-test	H01354	--	
HDC Ash	H01317	Benzyl alcohol	39400 µg/kg
		Benzyl alcohol	22000 µg/kg
Cyclone Ash	H01319	bis(2-Ethylhexyl) phthalate	1050 µg/kg

See Appendix J for surrogate recoveries and matrix spike results.

[a]None found.

TABLE 5-19. SEMIVOLATILE RESULTS SUMMARY FOR TEST RUN 3

Sample ID	Run No.	Compound	Concentration
Lab blank (Scrubber brine)	H01073	--[a]	
Lab blank (Scrubber liquor)	H01059	--	
Lab blank (Process water)	H01090	--	
Lab blank (Caustic)	H01102	--	
Lab blank (Fuel oil)	H01350		
Lab blank (HDC Ash)	H01315	Benbzyl alcohol	40900 µg/kg
Lab blank (Cyclone Ash)	H01329	Benzyl alcohol	56000 µg/kg
Scrubber brine pretest	H01082	--	
Scrubber brine post-test	H01083	--	
Scrubber liquor pretest	H01069	--	
Scrubber liquor post-test	H01070	--	
Process water pretest	H01097	--	
Process water post-test	H01155	--	
Caustic pretest	H01107/H01156	bis(2-Ethylhexyl) phthalate	82.8 µg/L
Caustic post-test	H01108	bis(2-Ethylhexyl) phthalate	595 µg/L
Fuel oil pretest	H01360	--	
Fuel oil post-test	H01361	--	
HDC Ash	H01323	Benzyl alcohol	291000 µg/kg
Cyclone Ash	H01330	Benzyl alcohol 4-Methylphenol	97000 µg/kg 1050 µg/kg

See Appendix J for surrogate recoveries and matrix spike results.
[a]None found.

TABLE 5-20. SEMIVOLATILE RESULTS SUMMARY FOR TEST RUN 4

Sample ID	Run No.	Compound	Concentration µg/L
Lab blank (Scrubber brine)	H01143	--[a]	
Lab blank (Scrubber liquor)	H01143	--	
Lab blank (Process water)	H01161	--	
Lab blank (Caustic)	H01143	--	
Lab blank (Fuel oil)	H01350	--	
Lab blank (HDC Ash)	H01315	Benbzyl alcohol	40900 µg/kg
Lab blank (Cyclone Ash)	H01329	Benzyl alcohol	56000 µg/kg
Scrubber brine pretest	H01146	--	
Scrubber brine post-test	H01147	--	
Scrubber liquor pretest	H01144	--	
Scrubber liquor post-test	H01145	--	
Process water pretest	H01164	--	
Process water post-test	H01165	--	
Caustic pretest	H01148	bis(2-Ethylhexyl) phthalate	75.2 µg/L
Caustic post-test	H01151		
Fuel oil pretest	H01355	--	
Fuel oil post-test	H01356	--	
HDC Ash	H01318	Benzyl alcohol	7520 µg/kg
Cyclone Ash	H01349	Benzyl alcohol	68900 µg/kg

See Appendix J for surrogate recoveries and matrix spike results.
[a]None found.

the samples of scrubber liquor or caustic. This common chemical is probably a glassine contaminant.

5.3.2 Results for the Determination of Energetics

Details of the operating parameters for the STEM are presented in Table 5-21 and indicate that the sampling for energetic substances was valid. The results for the STEM-train samples and PAS samples are listed in Tables 5-22 through 5-26. The samples were analyzed for nitroglycerin, 2,4-dinitrotoluene, 2,6-dinitrotoluene, dinitro-o-cresol (surrogate standard), trinitrotoluene, RDX, and HMX. Standard solutions containing each of these compounds were analyzed with the samples. A standard calibration curve was generated for each compound from a plot of compound concentration (μg/mL) versus peak area. The peak areas of the analyte peaks from the samples were then used to determine analyte concentrations. An example of the calculation procedure is outlined below:

Nitroglycerin Analysis:

Concentration of Standard Solution	Area
4.0 μg/mL	1125380
1.0 μg/mL	307161
0.4 μg/mL	120084

Correlation Coefficient (r) = 0.99981

Sample No.	Description	Area
4J-6E-54	Resin extract 1st section 3rd extraction	223709

Concentration from Linear Regression Data = 0.74 μg/mL

Amount Nitroglycerin found (μg) = concentration found (μg/mL) x sample volume (mL)

= 0.74 μg/mL x 30 mL

= 22.2 μg

The low levels found in the samples could not be confirmed by GC/MS. The train surrogate spikes gave low recovery for several samples. These samples typically had migration of the surrogate through the 1st three segments of the XAD-2 cartridge. The migration may have led to the apparent low recovery. As samples were recovered the XAD-2 was wrapped in foil and stored at 4°C.

5.3.3 PCB Results

The results from the PCB analysis of the water, scrubber-liquor, brine, caustic, and fuel-oil samples are listed in Table 5-27. Standard solutions

TABLE 5-21. STEM TRAIN SAMPLING AND RESULTS

Parameter	Units	Run 1	Run 2	Run 3	Run 4
Date	--	3/4/92	3/5/92	3/5/92	3/12/92
Sample Time	minutes	240	240	240	240
Sample Volume	dscf	223.032	201.924	206.811	216.433
Stack Gas Flow Rate	dscfm	12200	11533	112667	11633
Stack Gas Temperature	°F	181	180	179	183
Stack Gas Moisture	% volume	40.3	39.2	39.4	39.4
Percent Isokinetic		99.6	95.0	100.0	101.4
NG Catch	ug	15.0	229	103	67.6
NG Emission Rate	lb/hr	1.08×10^{-4}	1.73×10^{-3}	7.41×10^{-4}	4.80×10^{-4}
Oxygen Concentration	%	13.9	13.0	13.2	13.1
CO_2 Concentration	%	5.6	6.1	5.7	6.1
Leak Checks:					
Pitot Pretest		pass	pass	pass	pass
Pitot Post-test		pass	pass	pass	pass
Train Pretest	cfm at in. Hg	0.000 15	0.000 15	0.000 15	0.000 15
Train Post-test	cfm at in. Hg	0.000 12	0.000 15	0.000 12	0.000 10

TABLE 5-22. STEM TRAIN RESULTS

TRIAL BURN NO	AMOUNT FOUND, TOTAL UG							
	NITROGLYCERINE	2,4-DINITROTOLUENE	2,6-DINITROTOLUENE	DINITROCRESOL	% REC	TRINITROTOLUENE	RDX	HMX
BLANK	ND[a]	ND	ND	ND		ND	ND	ND
1	15.0[b]	ND	ND	12.4	50	ND	ND	ND
2	229[b]	ND	ND	7.5	30	ND	ND	ND
3	103[b]	ND	ND	16.7	66	ND	ND	ND
4	67.6[b]	ND	ND	7.3	29	ND	ND	ND

[a]ND = Not detected. Detection limit is 1 µg for each compound.

[b]Amount could not be confirmed by GC/MS.

TABLE 5-23. PAS ENERGETICS RESULTS

TEST RUN NO	DESCRIPTION	AMOUNT FOUND, TOTAL UG					
		NITROGLYCERIN	2,4-DINITROTOLUENE	2,6-DINITROTOLUENE	TRINITROTOLUENE	RDX	HMX
1	SCRUBBER, PRE	ND[a]	ND	ND	ND	ND	ND
	SCRUBBER, POST	ND	ND	ND	ND	ND	ND
	BRINE, PRE	ND	ND	ND	ND	ND	ND
	BRINE, POST	ND	ND	ND	ND	ND	ND
	CAUSTIC, PRE	ND	ND	ND	ND	ND	ND
	CAUSTIC, POST	ND	ND	ND	ND	ND	ND
	PROCESS WATER, PRE	ND	ND	ND	ND	ND	ND
	PROCESS WATER, POST	ND	ND	ND	ND	ND	ND

[a] ND = Not Detected. Detection limit is 1 µg for each compound.

6/22/92

TABLE 5-24. PAS ENERGETICS RESULTS

		AMOUNT FOUND, TOTAL UG					
TEST RUN NO	DESCRIPTION	NITROGLYCERIN	2,4-DINITROTOLUENE	2,6-DINITROTOLUENE	TRINITROTOLUENE	RDX	HMX
2	SCRUBBER, PRE	ND[a]	ND	ND	ND	ND	ND
	SCRUBBER, POST	ND	ND	ND	ND	ND	ND
	BRINE, PRE	ND	ND	ND	ND	ND	ND
	BRINE, POST	ND	ND	ND	ND	ND	ND
	CAUSTIC, PRE	ND	ND	ND	ND	ND	ND
	CAUSTIC, POST	ND	ND	ND	ND	ND	ND
	PROCESS WATER, PRE	ND	ND	ND	ND	ND	ND
	PROCESS WATER, POST	ND	ND	ND	ND	ND	ND

[a] ND - Not detected. Detection limit is 1 µg for each compound.

TABLE 5-25. PAS ENERGETICS RESULTS

TEST RUN NO	DESCRIPTION	AMOUNT FOUND, TOTAL UG					
		NITROGLYCERIN	2,4-DINITROTOLUENE	2,6-DINITROTOLUENE	TRINITROTOLUENE	RDX	HMX
3	SCRUBBER, PRE	ND[a]	ND	ND	ND	ND	ND
	SCRUBBER, POST	ND	ND	ND	ND	ND	ND
	BRINE, PRE	ND	ND	ND	ND	ND	ND
	BRINE, POST	4.95	ND	ND	ND	ND	ND
	CAUSTIC, PRE	ND	ND	ND	ND	ND	ND
	CAUSTIC, POST	ND	ND	ND	ND	ND	ND
	PROCESS WATER, PRE	ND	ND	ND	ND	ND	ND
	PROCESS WATER, POST	ND	ND	ND	ND	ND	ND

[a]ND = Not detected. Detection limit is 1 µg for each compound.

TABLE 5-26. PAS ENERGETICS RESULTS

TEST RUN NO	DESCRIPTION	AMOUNT FOUND, TOTAL UG					
		NITROGLYCERIN	2,4-DINITROTOLUENE	2,6-DINITROTOLUENE	TRINITROTOLUENE	RDX	HMX
4	SCRUBBER, PRE	ND[a]	ND	ND	ND	ND	ND
	SCRUBBER, POST	ND	ND	ND	ND	ND	ND
	BRINE, PRE	ND	ND	ND	ND	ND	ND
	BRINE, POST	4.0	ND	ND	ND	ND	ND
	CAUSTIC, PRE	ND	ND	ND	ND	ND	ND
	CAUSTIC, POST	ND	ND	ND	ND	ND	ND
	PROCESS WATER, PRE	ND	ND	ND	ND	ND	ND
	PROCESS WATER, POST	ND	ND	ND	ND	ND	ND

[a]ND = Not detected. Detection limit is 1 µg for each compounds.

TABLE 5-27. PCB RESULTS

	SAMPLE NO	PCB FOUND µG/ML	SURROGATE FOUND[a]	% RECOVERY
RUN 1				
PROCESS WATER PRETEST	4J-2-25	ND[b]	0.058	59.8
PROCESS WATER POST TEST	4J-2-60	ND	0.06	61.9
SCRUBBER LIQUOR PRETEST	4J-2-4	ND	0.064	66.0
SCRUBBER LIQUOR POST TEST	4J-2-36	ND	0.066	68.0
BRINE PRETEST	4J-2-12	ND	0.05	51.5
BRINE POST TEST	4J-2-44	ND	0.075	77.3
CAUSTIC PRETEST	4J-2-19	ND	0.06	61.9
CAUSTIC POST TEST	4J-2-54	ND	0.042	43.3
FUEL OIL PRETEST	4J-2-31	ND	0.089	91.8
FUEL OIL POST TEST	4J-2-66	ND	0.093	95.9
RUN 2				
PROCESS WATER PRETEST	4J-3-25	ND	0.067	69.1
PROCESS WATER POST TEST	4J-3-60	ND	0.065	67.0
SCRUBBER LIQUOR PRETEST	4J-3-4	ND	0.052	53.6
SCRUBBER LIQUOR POST TEST	4J-3-30	ND	0.085	87.6
BRINE PRETEST	4J-3-12	ND	0.067	69.1
BRINE POST TEST	4J-3-44	ND	0.062	63.9
CAUSTIC PRETEST	4J-3-19	ND	0.073	75.3
CAUSTIC POST TEST	4J-3-54	ND	0.051	52.6
FUEL OIL PRETEST	4J-3-31	ND	0.08	82.5
FUEL OIL POST TEST	4J-3-67	ND	0.093	95.9
RUN 3				
PROCESS WATER PRETEST	4J-4-25	ND	0.062	63.9
PROCESS WATER POST TEST	4J-4-60	ND	0.07	72.2
SCRUBBER LIQUOR PRETEST	4J-4-4	ND	0.059	60.8
SCRUBBER LIQUOR POST TEST	4J-4-36	ND	0.074	76.3
BRINE PRETEST	4J-4-12	ND	0.063	64.9
BRINE POST TEST	4J-4-44	ND	0.064	66.0
CAUSTIC PRETEST	4J-4-19	ND	0.057	58.8
CAUSTIC POST TEST	4J-4-54	ND	0.051	52.6
FUEL OIL PRETEST	4J-4-32	ND	0.094	96.9
FUEL OIL POST TEST	4J-4-66	ND	0.087	89.7
RUN 4				
PROCESS WATER PRETEST	4J-6-26	ND	ND[c]	
PROCESS WATER POST TEST	4J-6-61	ND	ND	
SCRUBBER LIQUOR PRETEST	4J-6-4	ND	ND	
SCRUBBER LIQUOR POST TEST	4J-6-36	ND	ND	
BRINE PRETEST	4J-6-12	ND	ND	
BRINE POST TEST	4J-6-44	ND	ND	
CAUSTIC PRETEST	4J-6-19	ND	0.066	68.0
CAUSTIC POST TEST	4J-6-54	ND	0.069	71.1
FUEL OIL PRETEST	4J-6-31	ND	0.08	82.5
FUEL OIL POST TEST	4J-6-67	ND	0.083	85.6
BLANKS				
PROCESS WATER		ND	0.068	70.1
SCRUBBER LIQUOR		ND	0.043	44.3
BRINE		ND	0.054	55.7
CAUSTIC		ND	0.043	44.3
FUEL OIL		ND	0.08	82.5

[a] = AMOUNT OF SURROGATE ADDED 0.097 µG/ML

[b] = ND = NOT DETECTED. DETECTION LIMITS ARE 0.5UG/L FOR PROCESS WATER, SCRUBBER LIQUOR, CAUSTIC AND BRINE; AND 0.5MG/KG FOR FUEL OIL.

[c] = SAMPLE NOT SPIKED.

for Aroclor 1016, 1221, 1232, 1242, 1248, 1254, and 1260 were analyzed with the samples. Samples were quantitated by comparing the responses to three major peaks with the corresponding responses obtained from standard solutions of the Aroclors. The results for HDC and cyclone-ash samples are listed in Table 5-28. The ash samples were quantitated by comparing the total peak area for a 2-min retention-time window with the same measurement from Aroclor 1248 standard solutions.

An example of the quantitation procedure is given below.

Aroclor 1248 Concentration, ng/mL	Total Area (2-min window)
100	129106
200	280353
500	678568
1000	1297815

Correlation coefficient (r) = 0.99959

Sample ID	Total Area	Concentration, ng/mL (from linear regression data)
Run 2 Cyclone Ash	770735	585 ng/mL
SRI Lab Blank	250791	182 ng/mL

Sample Conc. = Initial conc found - Blank conc
= 585 ng/mL - 182 ng/mL
= 403 ng/mL

$$\text{Reported conc (ng/kg)} = \frac{\text{Conc (ng/mL)} \times \text{Final extraction volume (mL)} \times \frac{1\ \text{mg}}{1 \times 10^6\ \text{ng}}}{\text{Sample weight (g)} \times \frac{1\ \text{kg}}{1000\ \text{g}}}$$

$$= \frac{403\ \text{ng/mL} \times 10\ \text{mL} \times \frac{1\ \text{ng}}{1\text{x}10^6\ \text{ng}}}{10.01\ \text{g} \times \frac{1\ \text{kg}}{1000\ \text{g}}}$$

$$= 0.403\ \text{ng/kg}$$

5.3.4 Results from the Determinations of Volatile Organics

The results of the analyses of VOST samples and aqueous process samples for volatile organics are summarized in Tables 5-29 through 5-33. The results for VOST tubes and condensates are given in terms of the total weight (in ng) collected. For aqueous process samples, results are given as concentrations in units of ug/L.

The aqueous process samples contained only a few components, such as acetone and 2-butanone, that fell above the low end of the calibration curve. But acetone and 2-butanone are common laboratory solvents and thus are not

TABLE 5-28. RESULTS OF PCB ANALYSIS
ASH SAMPLES

RUN NO.	DESCRIPTION	AMOUNT FOUND,[a] ng/kg
2	HDC	ND[b]
	CYCLONE	0.40
3	HDC	ND
	CYCLONE	0.66
4	HDC	0.08
	CYCLONE	0.36
5	HDC	ND
	CYCLONE	0.88

[a]TENTATIVELY IDENTIFIED AS PCBS USING ELECTRON CAPTURE DETECTION AROCLOR PATTERN NOT PRESENT IN CHROMATOGRAMS.

[b]ND, DETECTION LIMIT OF 0.05 ng/kg.

TABLE 5-29. VOST VOLATILE ORGANICS RESULTS SUMMARY RUN 1

Sample ID	Sample No.	Compound	Amount(ng)
Pair #1			
Tenax	4J-2-117	Acetone	266
Tenax/Charcoal	4J-2-118	Methylene Chloride	234
		2-Butanone	2390
		1,1,1-Trichloroethane	172
		Benzene	96.0
		Toluene	90.0
		Dibromochloromethane	20.0
		Ethylbenzene	87.0
		m- & p- Xylene	25.0
		Styrene	348
		o- Xylene	28.0
		Bromoform	187
Pair #2			
Tenax	4J-2-119	Acetone	225
Tenax/Charcoal	4J-2-120	Methylene Chloride	388
		2-Butanone	2120
		1,1,1-Trichloroethane	145
		Benzene	91.0
		Toluene	69.0
		Dibromochloromethane	18.0
		Ethylbenzene	58.0
		m- & p- Xylene	19.0
		Styrene	378
		o- Xylene	20.0
		Bromoform	175
Pair #3			
Tenax	4J-2-121	Acetone	360
Tenax/Charcoal	4J-2-122	Methylene Chloride	106
		2-Butanone	1890
		Chloroform	1420
		1,1,1-Trichloroethane	160
		Benzene	113
		Bromodichloromethane	51.0
		Toluene	77.0
		Dibromochloromethane	23.0
		Ethylbenzene	68.0
		m- & p- Xylene	20.0
		Styrene	223
		o- Xylene	22.0
		Bromoform	46.0

(continued)

TABLE 5-29 (continued)

Sample ID	Sample No.	Compound	Amount (ng)
Pair #4			
Tenax	4J-2-123	Acetone	270
Tenax/Charcoal	4J-2-124	Methylene Chloride	82.0
		2-Butanone	1800
		Chloroform	1750
		1,1,1-Trichloroethane	170
		Benzene	96.0
		Bromodichloromethane	66.0
		Toluene	79.0
		Dibromochloromethane	22.0
		Ethylbenzene	51.0
		m- & p- Xylene	16.0
		Styrene	204
		o- Xylene	15.0
		Bromoform	57.0
Field Blank			
Tenax	4J-2-125	Toluene	1.00
Tenax/Charcoal	4J-2-126		
Trip Blank			
Tenax	4J-2-127	Chloromethane	63.0
Tenax/Charcoal	4J-2-128	Methylene Chloride	95.0
		1,1,1-Trichloroethane	14.0
Cond #1	4J-2-129	Acetone	2050
		Methylene Chloride	218
		2-Butanone	883
		1,1,1-Trichloroethane	123
		Toluene	15.0
Cond #2	4J-2-130	Acetone	2120
		Methylene Chloride	181
		2-Butanone	822
		1,1,1-Trichloroethane	93.0
		Toluene	28.0
Cond #3	4J-2-131	Acetone	2510
		Methylene Chloride	156
		1,1,1-Trichloroethane	208
		Toluene	26.0

(continued)

TABLE 5-29 (continued)

Sample ID	Sample No.	Compound	Amount (ng)
Cond #4	4J-2-132	Acetone	2500
		Methylene Chloride	167
		1,1,1-Trichloroethane	249
		Toluene	24.0
Cond Blank	4J-2-133	Acetone	3330
		Methylene Chloride	184
		2-Butanone	1000
		1,1,1-Trichloroethane	241
		Toluene	50.0

TABLE 5-30. VOST VOLATILE ORGANICS RESULTS SUMMARY RUN 2

Sample ID	Sample No.	Compound	Amount (ng)
Pair #1			
Tenax	4J-3-113	Methylene Chloride	368
Tenax/Charcoal	4J-3-114	2-Butanone	921
		Chloroform	149
		1,1,1-Trichloroethane	183
		Benzene	81.0
		Toluene	120
		Dibromochloromethane	18.0
		Ethylbenzene	77.0
		m- & p- Xylene	25.0
		Styrene	52.0
		o- Xylene	25.0
		Bromoform	83.0
Pair #2			
Tenax	4J-3-115	Acetone	151
Tenax/Charcoal	4J-3-116	Methylene Chloride	567
		2-Butanone	1660
		Chloroform	78.0
		1,1,1-Trichloroethane	154
		Benzene	61.0
		Toluene	118
		Dibromochloromethane	23.0
		Ethylbenzene	134
		m- & p- Xylene	42.0
		Styrene	624
		o- Xylene	16.0
		Bromoform	153
Pair #3			
Tenax	4J-3-117	Acetone	191
Tenax/Charcoal	4J-3-118	Methylene Chloride	241
		2-Butanone	1740
		Chloroform	78.0
		1,1,1-Trichloroethane	131
		Benzene	63.0
		Toluene	59.0
		Dibromochloromethane	17.0
		Ethylbenzene	27.0
		m- & p- Xylene	14.0
		Styrene	320
		o- Xylene	16.0
		Bromoform	112

(continued)

TABLE 5-30 (continued)

Sample ID	Sample No.	Compound	Amount (ng)
Pair #4			
Tenax	4J-3-119	Acetone	289
Tenax/Charcoal	4J-3-120	Methylene Chloride	50.0
		2-Butanone	1580
		1,1,1-Trichloroethane	138
		Benzene	108
		Toluene	61.0
		Dibromochloromethane	24.0
		Ethylbenzene	70.0
		m- & p- Xylene	24.0
		Styrene	347
		o- Xylene	23.0
		Bromoform	163
Field Blank			
Tenax	4J-3-121	Methylene Chloride	31.0
Tenax/Charcoal	4J-3-122	1,1,1-Trichloroethane	36.0
		Toluene	4.0
Cond #1	4J-3-123	Acetone	2060
		Methylene Chloride	169
		1,1,1-Trichloroethane	178
		Toluene	52.0
Cond #2	4J-3-124	Acetone	2280
		Methylene Chloride	193
		1,1,1-Trichloroethane	262
		Toluene	42.0
Cond #3	4J-3-125	Acetone	2486
		Methylene Chloride	129
		1,1,1-Trichloroethane	135
		Toluene	54.0
Cond #4	4J-3-126	Acetone	2180
		Methylene Chloride	145
		1,1,1-Trichloroethane	128
		Toluene	49.0
Cond Blank	4J-3-127	Acetone	3610
		Methylene Chloride	204
		1,1,1-Trichloroethane	180
		Toluene	82.0

TABLE 5-31. VOST VOLATILE ORGANICS RESULTS SUMMARY RUN 3

Sample ID	Sample No.	Compound	Amount (ng)
Pair #1			
Tenax	4J-4-101	Acetone	295
Tenax/Charcoal	4J-4-102	Methylene Chloride	85.0
		2-Butanone	1440
		Chloroform	40.0
		1,1,1-Trichloroethane	145
		Benzene	107
		Toluene	167
		Ethylbenzene	43.0
		m- & p- Xylene	14.0
		Styrene	329
		o- Xylene	16.0
		Bromoform	49.0
Pair #2			
Tenax	4J-4-103	Acetone	133
Tenax/Charcoal	4J-4-104	Methylene Chloride	343
		2-Butanone	929
		Chloroform	38.0
		1,1,1-Trichloroethane	173
		Benzene	135
		Toluene	306
		Chlorobenzene	36.0
		Ethylbenzene	68.0
		m- & p- Xylene	22.0
		Styrene	580
		o- Xylene	29.0
		Bromoform	177
Pair #3			
Tenax	4J-4-105	Methylene Chloride	220
Tenax/Charcoal	4J-4-106	Chloroform	16.0
		1,1,1-Trichloroethane	113
		Benzene	45.0
		Toluene	555
		Dibromochloromethane	2.00
		Chlorobenzene	27.0
		Ethylbenzene	21.0
		m- & p- Xylene	9.00
		Styrene	420
		o- Xylene	1.00
		Bromoform	23.0

(continued)

TABLE 5-31 (continued)

Sample ID	Sample No.	Compound	Amount (ng)
Pair #4			
Tenax	4J-4-107	Methylene Chloride	69.0
Tenax/Charcoal	4J-4-108	2-Butanone	1050
		Chloroform	33.0
		1,1,1-Trichloroethane	178
		Benzene	136
		Toluene	85.0
		Chlorobenzene	15.0
		Ethylbenzene	113
		m- & p- Xylene	36.0
		Styrene	304
		o- Xylene	37.0
		Bromoform	120
Field Blank			
Tenax	4J-4-109	Methylene Chloride	23.0
Tenax/Charcoal	4J-4-110	2-Butanone	90.0
		1,1,1-Trichloroethane	54.0
		Toluene	10.0
Cond #1	4J-4-111	Acetone	2410
		Methylene Chloride	145
		2-Butanone	206
		1,1,1-Trichloroethane	161
		Toluene	44.0
Cond #2	4J-4-112	Acetone	2830
		Methylene Chloride	173
		1,1,1-Trichloroethane	228
		Toluene	58.0
Cond #3	4J-4-113	Acetone	3080
		Methylene Chloride	138
		1,1,1-Trichloroethane	224
		Toluene	54.0
Cond #4	4J-4-114	Acetone	2620
		Methylene Chloride	111
		1,1,1-Trichloroethane	195
		Toluene	44.0
Cond Blank	4J-4-115	Acetone	2550
		Methylene Chloride	178
		1,1,1-Trichloroethane	234

TABLE 5-32. VOST VOLATILE ORGANICS RESULTS SUMMARY RUN 4

Sample ID	Sample No.	Compound	Amount (ng)
Pair #1			
Tenax	4J-6-95	Acetone	2760
Tenax/Charcoal	4J-6-96	Methylene Chloride	6000
		2-Butanone	4690
		1,1,1-Trichloroethane	100
		Benzene	258
		Toluene	5680
		Dibromochloromethane	12.0
		Ethylbenzene	42.0
		m- & p- Xylene	21.0
		Styrene	351
		o- Xylene	20.0
		Bromoform	123
Pair #2			
Tenax	4J-6-97	Acetone	4110
Tenax/Charcoal	4J-6-98	Methylene Chloride	11600
		2-Butanone	316
		1,1,1-Trichloroethane	83.0
		Benzene	293
		Toluene	7920
		Dibromochloromethane	37.0
		Ethylbenzene	62.0
		m- & p- Xylene	32.0
		Styrene	271
		o- Xylene	33.0
		Bromoform	378
Pair #3			
Tenax	4J-6-99	Acetone	2240
Tenax/Charcoal	4J-6-100	Methylene Chloride	6550
		2-Butanone	2840
		1,1,1-Trichloroethane	109
		Benzene	286
		Toluene	9340
		Ethylbenzene	45.0
		m- & p- Xylene	22.0
		Styrene	17.0
		o- Xylene	21.0
		Bromoform	428

(continued)

TABLE 5-32 (continued)

Sample ID	Sample No.	Compound	Amount (ng)
Pair #4			
Tenax	4J-6-101	Acetone	3950
Tenax/Charcoal	4J-6-102	Methylene Chloride	8840
		2-Butanone	3950
		1,1,1-Trichloroethane	102
		Benzene	261
		Toluene	11000
		Ethylbenzene	29.0
		m- & p- Xylene	14.0
		Styrene	114
		o- Xylene	14.0
		Bromoform	440
Field Blank			
Tenax	4J-6-103	1,1,1-Trichloroethane	58.0
Tenax/Charcoal	4J-6-104	Benzene	10.0
		Toluene	50.0
Trip Blank			
Tenax	4J-6-105	Methylene Chloride	17.0
Tenax/Charcoal	4J-6-106	1,1,1-Trichloroethane	46.0
		Toluene	14.0
Cond #1	4J-6-107	Acetone	735000
		Methylene Chloride	113000
		1,1,1-Trichloroethane	219
		Toluene	56200
Cond #2	4J-6-108	Acetone	640000
		Methylene Chloride	108000
		1,1,1-Trichloroethane	191
		Toluene	52000
Cond #3	4J-6-109	Acetone	748000
		Methylene Chloride	105000
		1,1,1-Trichloroethane	232
		Toluene	47800
Cond #4	4J-6-110	Acetone	671000
		Methylene Chloride	110000
		1,1,1-Trichloroethane	237
		Toluene	51500
Cond Blank	4J-6-111	Acetone	955000
		Methylene Chloride	181000
		1,1,1-Trichloroethane	220
		Toluene	70200

TABLE 5-33. AQUEOUS VOLATILE ORGANICS SUMMARY

Run	Sample ID	Sample No.	Compound	Concentration µg/L)
1	Process Water Pretest	4J-2-30	2-Butanone	8.46
			1,1,1-Trichloroethane	5.48
			Dibromochloromethane	2.75
			Bromoform	22.6
	Process Water Posttest	4J-2-65	Methylene Chloride	1.52
			2-Butanone	23.7
			1,1,1-Trichloroethane	2.98
			Dibromochloromethane	3.13
			Bromoform	20.5
	Caustic Pretest	4J-2-22	Acetone	39.1
			Methylene Chloride	1.75
			2-Butanone	93.1
			1,1,1-Trichloroethane	3.35
	Caustic Posttest	4J-2-57	Acetone	33.3
			Methylene Chloride	1.13
			2-Butanone	100
			1,1,1-Trichloroethane	4.97
	Scrubber Brine Pretest	4J-2-15	Acetone	19.3
			2-Butanone	1.4
	Scrubber Brine Posttest	4J-2-48	Acetone	17.3
			Methylene Chloride	1.42
			2-Butanone	5.82
			Chloroform	17.6
			1,1,1-Trichloroethane	5.56
	Scrubber Liquor Pretest	4J-2-8	Acetone	1.81
			1,1,1-Trichloroethane	4.82
	Scrubber Liquor Posttest	4J-2-39	Methylene Chloride	1.52
			1,1,1-Trichloroethane	5.57
	HDC Ash Composite	4J-2 Comp	1,1,1-Trichloroethane	5.05
			Toluene	6.58
	Cyclone Ash	4J-2-68	Acetone	47
			Methylene Chloride	10.5
			2-Butanone	9.23
			Toluene	2.72

(continued)

TABLE 5-33 (continued)

Run	Sample ID	Sample No.	Compound	Concentration µg/L)
2	Process Water Pretest	4J-3-29	2-Butanone	10.9
			1,1,1-Trichloroethane	2.27
			Dibromochloromethane	4.02
			Bromoform	18.5
	Process Water Posttest	4J-3-65	Methylene Chloride	1.7
			2-Butanone	20.4
			1,1,1-Trichloroethane	1.36
			Dibromochloromethane	4.85
			Bromoform	16.2
	Caustic Pretest	4J-3-22	Acetone	21.7
			Methylene Chloride	1.18
			2-Butanone	93.6
			1,1,1-Trichloroethane	6.19
	Caustic Posttest	4J-3-57	Acetone	30.7
			2-Butanone	96.8
			1,1,1-Trichloroethane	2.92
	Scrubber Brine Pretest	4J-3-48	Methylene Chloride	1.26
			2-Butanone	5.95
			1,1,1-Trichloroethane	5.58
	Scrubber Brine Posttest	4J-3-15	Acetone	2.66
			Methylene Chloride	1.45
			2-Butanone	10.6
			1,1,1-Trichloroethane	5.67
	Scrubber Liquor Pretest	4J-3-7	Methylene Chloride	2.06
			1,1,1-Trichloroethane	5.40
	Scrubber Liquor Posttest	4J-3-39	1,1,1-Trichloroethane	2.70
	HDC Ash Composite	4J-3 Comp	1,1,1-Trichloroethane	2.40
			Toluene	13.1
3	Process Water Pretest	4J-4-30	Methylene Chloride	1.41
			1,1,1-Trichloroethane	3.30
			Dibromochloromethane	4.83
			Bromoform	13.7
	Process Water Posttest	4J-4-65	Methylene Chloride	1.12
			1,1,1-Trichloroethane	5.19
			Dibromochloromethane	4.20
			Bromoform	14.3

(continued)

TABLE 5-33 (continued)

Run	Sample ID	Sample No.	Compound	Concentration µg/L)
	Caustic Pretest	4J-4-22	Acetone	26.4
			Methylene Chloride	1.20
			2-Butanone	97.9
			1,1,1-Trichloroethane	5.22
	Caustic Posttest	4J-4-57	Acetone	27.7
			Methylene Chloride	1.64
			2-Butanone	101
			1,1,1-Trichloroethane	5.11
	Scrubber Brine Pretest	4J-4-15	Acetone	7.33
			Methylene Chloride	1.44
			2-Butanone	15.2
			1,1,1-Trichloroethane	2.65
	Scrubber Brine Posttest	4J-4-47	Methylene Chloride	1.11
			2-Butanone	3.94
			1,1,1-Trichloroethane	2.33
	Scrubber Liquor Pretest	4J-4-8	Methylene Chloride	1.86
			1,1,1-Trichloroethane	5.50
	Scrubber Liquor Posttest	4J-4-38	Methylene Chloride	1.41
			1,1,1-Trichloroethane	5.09
	HDC Ash Composite	4J-4 Comp	Acetone	22.9
			Methylene Chloride	21.1
			Chloroform	1.24
			1,1,1-Trichloroethane	5.38
			Benzene	2.45
			Toluene	32.9
4	Process Water Pretest	4J-6-29	Methylene Chloride	1.18
			2-Butanone	16.9
			1,1,1-Trichloroethane	5.65
			Dibromochloromethane	1.53
			Bromoform	12.5
	Process Water Posttest	4J-6-64	Methylene Chloride	5.22
			2-Butanone	6.47
			1,1,1-Trichloroethane	5.82
			Toluene	2.46
			Dibromochloromethane	1.15
			Bromoform	12.7

(continued)

TABLE 5-33 (continued)

Run	Sample ID	Sample No.	Compound	Concentration µg/L)
	Caustic Pretest	4J-6-22	Acetone	15.1
			2-Butanone	91.3
			1,1,1-Trichloroethane	5.66
	Caustic Posttest	4J-6-57	Acetone	39.5
			Methylene Chloride	1.13
			2-Butanone	73.8
			1,1,1-Trichloroethane	5.84
	Scrubber Brine Pretest	4J-6-15	Acetone	27.7
			Methylene Chloride	1.56
			2-Butanone	36.2
			1,1,1-Trichloroethane	4.60
	Scrubber Brine Posttest	4J-6-48	Acetone	20.9
			Methylene Chloride	1.64
			2-Butanone	29.4
			1,1,1-Trichloroethane	6.38
			Toluene	3.29
	Scrubber Liquor Pretest	4J-6-7	Methylene Chloride	1.26
			2-Butanone	17.4
			1,1,1-Trichloroethane	5.77
	Scrubber Liquor Posttest	4J-6-39	Methylene Chloride	4.30
			1,1,1-Trichloroethane	2.85
			Toluene	2.75
	HDC Ash Composite	4J-6 Comp	Methylene Chloride	4.74
			1,1,1-Trichloroethane	2.93
			Benzene	1.00
			Toluene	7.21

thought to be representative of the process streams that were sampled. The only other compounds detected above the 20-μg/L level were toluene in the HDC Ash Composite from Run 3 and bromoform in the Process Water Pre- and Post-test samples from Run 1. Only the components that were found are reported in the summary tables.

Sample calculation for aqueous process samples:

4J-2-30 Run 1 Process Water Pretest

for concentration of 2-butanone:

$$\frac{\text{(Area of component detected)(Concentration of internal standard)}}{\text{(Area of internal standard)(Response factor from 5-pt. calibration)}} =$$

$$\frac{(3455)(50\mu g/L)}{(197466)(0.103)} = 8.46\ \mu g/L$$

Most of the compounds found in VOST tubes were at or below the lowest calibration level of 100ng. Methylene chloride, 1,1,1-trichloroethane, benzene, and toluene were present in almost all lab blanks.

In Run 4, the VOST tubes showed unusually high levels of acetone, methylene chloride, and toluene, which were not present in field or lab blanks. These three compounds were also found in extremely high levels in the condensates and condensate blank from Run 4. Perhaps the VOST field blank was not exposed to the same contaminated environment as the samples from Run 4. All compounds found in the condensates, including extremely high levels of acetone, were also present in the condensate blanks.

Sample calculation for VOST:

4J-2-117 Run 1 Pair #1 Tenax

for amount of acetone:

$$\frac{\text{(Area of component detected)(Amount of internal standard)}}{\text{(Area of internal standard)(Response factor from 3-pt. calibration)}} =$$

$$\frac{(37320)(250ng)}{(189527)(0.185)} = 266\ ng$$

$$\frac{\text{Amount detected (ng)}}{\text{Volume sampled (L)}} = \frac{266\ ng}{20.414} = 13.0\ ng/L \text{ stack-gas concentration}$$

5.3.5 Anion Determinations

The anions Cl^- and F^- were measured in the stack gas to determine the levels of HCl and HF in the emissions from the incinerator; the required samples were collected with an M5AT. The anion PO_4^{-3} was measured on the filter of the M5AT. Details of the operating parameters for the M5AT are presented in Table 5-34 and indicate that the sampling for acids was valid. The anions measured in the incinerator-residue samples were Cl^-, F^- and PO_4^{-3}.

TABLE 5-34. METHOD 5 ACID TRAIN CONDITIONS AND RESULTS

Parameter	Units	Run 1	Run 2	Run 3	Run 4
Date	--	3/4/92	3/5/92	3/5/92	3/12/92
Sample Time	minutes	120	120	120	120
Sample Volume	dscf	107.412	98.900	95.153	99.473
Stack Gas Flow Rate	dscfm	11500	10917	10600	10683
Stack Gas Temperature	°F	183	181	181	182
Stack Gas Moisture	% volume	39.5	39.1	39.2	39.0
Percent Isokinetic		101.1	99.7	96.5	98.2
HCl Catch	mg	<1.69	<1.88	<1.95	<1.69
HCl Emission Rate	lb/hr	NA[a]	NA	NA	NA
HF Catch	mg	<1.13	<1.25	<1.30	<1.13
HF Emission Rate	lb/hr	NA	NA	NA	NA
Part. Catch	mg	2.3	8.3	6.0	1.7
Part. Emission Rate	lb/hr	0.0325	0.121	0.0888	.0241
Part. Conc. @ 7% O2	gr/dscf	0.00066	0.00225	0.00172	0.00047
	mg/dscm	1.50	5.15	3.94	1.07
Part. Conc. @ 12% CO_2	gr/dscf	0.00071	0.00251	0.0019	0.00051
	mg/dscm	1.62	5.74	4.39	1.17

(continued)

TABLE 5-34 (continued)

Parameter	Units	Run 1	Run 2	Run 3	Run 4
Oxygen Concentration	%	13.9	12.9	13.0	13.0
CO_2 Concentration	%	5.6	6.2	6.1	6.1
Leak Checks:					
Pitot Pretest		pass	pass	pass	pass
Pitot Post-test		pass	pass	pass	pass
Train Pretest	cfm at in. Hg	0.004 15	0.007 15	0.002 15	0.002 15
Train Post-test	cfm at in. Hg	0.001 12	0.002 12	0.002 12	0.000 12

*NA = Not applicable because no HCl or HF was detected.

Table 5-35 gives the results of the analyses of the M5AT for HCl, Cl_2, and HF. By using both H_2SO_4 and NaOH impingers, the M5AT differentiates between HCl and Cl_2 in the stack. No HCl was found in the M5AT samples. No HF was found in the M5AT samples.

Field data sheets for the above sampling trains are provided in Appendix F. Complete tabulations of reduced data and calculations of concentrations for the trains are provided in Appendix D.

The process liquids and fuel oil were analyzed for chloride, fluoride, and phosphate; Table 5-36 gives the fluoride and phosphate results. The highest concentrations of fluoride and phosphate were found in the scrubber liquor and scrubber brine. The levels found in the pretest samples were similar to and sometimes higher than those found in the post-test samples.

5.3.6 Metals analysis

Samples intended for the determination of metals were collected from the stack emissions with an MMT. Table 5-37 indicates the operating parameters for this train. Particulate materials were also collected with the MMT, and the results of particulate-concentration measurements are also detailed in the table.

The remaining results for the MMT are given in Table 5-38. These results show that twelve of the metals were found in one or more of the samples. In some cases, these metals were also found in the blanks. Complete tabulations of reduced data and calculations of concentrations for the train samples are provided in Appendix D. The data are reported as front (particulate and filter components) and back (impingers). There are no regulatory limits for the concentrations of metals in these sample media; however, the concentrations of most metals were near or below the applicable method detection limits.

The results of the analyses of DFS incinerator-process samples for metals are given in Table 5-39. Cadmium and lead were both present at levels above the regulatory limits. Specifically, the pretest and post-test samples of scrubber brine from all four tests contained high concentrations of cadmium and lead.

The results of the analyses of the ash-composite TCLP extracts are given in Table 5-40. Lead and cadmium were present at levels above the regulatory limits. The cyclone ash from Tests 3 and 4 contained high levels of lead, and the HDC ash-composite extracts for all four tests showed concentrations of cadmium higher than the regulatory limits.

5.3.6.1 *Example Calculations*

MMT Front Half:

The final volume for MMT front halves is 100 mL. If a sample gives an ICP result for Cu of 1.25 μg/mL, then total μg Cu = 1.25 μg/mL x 100 mL = 125 μg.

TABLE 5-35. METHOD 5 ACID TRAIN RESULTS

Sample ID	Sample No.	Imp Vol, mL	Total µg HCl	Cl_2	HF	PO_4^{-3}
Blank Train						
Filter	4J-3-01		NA[a]	NA	NA	200
Imp 1	4J-3-03	125	ND[b]	NA	ND	NA
Imp 2	4J-3-04	175	ND	NA	ND	NA
Imp 3	4J-3-05	200	ND	NA	ND	NA
Imp 4	4J-3-06	175	NA	ND	ND	NA
Imp 5	4J-3-07	225	NA	ND	ND	NA
0.1N H_2SO_4 Blank	4J-3-08	100	ND	NA	ND	NA
0.1N NaOH Blank	4J-3-09	50	NA	ND	ND	NA
DI H_2O Blank	4J-3-10	100	ND	ND	ND	NA
Filter Blank	4J-3-12		NA	NA	NA	160
Run 1						
Filter	4J-2-69		NA	NA	NA	163
Imp 1	4J-2-71	450	ND	NA	ND	NA
Imp 2	4J-2-72	450	ND	NA	ND	NA
Imp 3	4J-2-73	450	ND	NA	ND	NA
Imp 4	4J-2-74	450	NA	ND	ND	NA
Imp 5	4J-2-75	450	NA	ND	ND	NA
0.1N H_2SO_4 Blank	4J-2-76	200	ND	NA	ND	NA
0.1N NaOH Blank	4J-2-77	200	NA	ND	ND	NA
DI H_2O Blank	4J-2-78	200	ND	ND	ND	NA
Filter Blank	4J-2-80		NA	NA	NA	146
Run 2						
Filter	4J-3-69		NA	NA	NA	148
Imp 1	4J-3-71	475	ND	NA	ND	NA
Imp 2	4J-3-72	500	ND	NA	ND	NA
Imp 3	4J-3-73	475	ND	NA	ND	NA
Imp 4	4J-3-74	450	NA	ND	ND	NA
Imp 5	4J-3-75	350	NA	ND	ND	NA
0.1N H_2SO_4 Blank	4J-3-76	100	ND	NA	ND	NA
0.1N NaOH Blank	4J-3-77	100	NA	ND	ND	NA
DI H_2O Blank	4J-3-78	100	ND	ND	ND	NA

(continued)

TABLE 5-35 (continued)

Sample ID	Sample No.	Imp Vol, mL	Total µg HCl	Cl_2	HF	PO_4^{-3}
Run 3						
Filter	4J-4-116		NA	NA	NA	159
Imp 1	4J-4-118	500	ND	NA	ND	ND
Imp 2	4J-4-119	519	ND	NA	ND	ND
Imp 3	4J-4-120	500	ND	NA	ND	ND
Imp 4	4J-4-121	425	NA	ND	ND	ND
Imp 5	4J-4-122	200	NA	ND	ND	ND
0.1N H_2SO_4 Blank	4J-4-123	100	ND	NA	ND	ND
0.1N NaOH Blank	4J-4-124	100	NA	ND	ND	ND
DI H_2O Blank	4J-4-125	100	ND	ND	ND	ND
Run 4						
Filter	4J-6-80		NA	NA	NA	140
Imp 1	4J-6-71	500	ND	NA	ND	ND
Imp 2	4J-6-72	450	ND	NA	ND	ND
Imp 3	4J-6-73	450	ND	NA	ND	ND
Imp 4	4J-6-74	475	NA	ND	ND	ND
Imp 4	4J-6-75	300	NA	ND	ND	ND
0.1N H_2SO_4 Blank	4J-6-76	50	ND	NA	ND	ND
0.1N NaOH Blank	4J-6-77	50	NA	ND	ND	ND
DI H_2O Blank	4J-7-78	50	ND	ND	ND	ND

[a]NA = Not applicable, this fraction of sample was not analyzed for this analyte.

[b]ND = Not Detected. Detection limit for Cl_2 - 4 µg/mL; for HF - 3 µg/mL; for PO_4^{-3} - 68 µg/mL in liquids (To estimate the limit for the entire sample, multiply by the volume). Detection limit for PO_4^{-3} on filters - 32 µg.

TABLE 5-36. ANION CONCENTRATIONS

Run No.	Sample ID	Sample No.	Concentration (mg/L) F^-	PO_4^{-3}	Cl^-
1	Process Water Pretest	4J-2	ND[a]	ND	170
	Process Water Post Test	4J-2	ND	ND	110
	Scrubber Liquor Pretest	4J-2	ND	430	610
	Scrubber Liquor Post Test	4J-2	24	3010	510
	Scrubber Brine Pretest	4J-2	230	7600	18000
	Scrubber Brine Post Test	4J-2	240	7700	19000
	Caustic Pretest	4J-2	ND	ND	1300
	Caustic Post Test	4J-2	ND	ND	1300
	Fuel Oil Pretest	4J-2	0.31	ND	ND
	Fuel Oil Post Test	4J-2	0.30	ND	0.16
2	Process Water Pretest	4J-3	ND	ND	180
	Process Water Post Test	4J-3	ND	ND	180
	Scrubber Liquor Pretest	4J-3	ND	ND	390
	Scrubber Liquor Post Test	4J-3	ND	ND	370
	Scrubber Brine Pretest	4J-3	210	6500	12000
	Scrubber Brine Post Test	4J-3	230	8700	16000
	Caustic Pretest	4J-3	ND	ND	1300
	Caustic Post Test	4J-3	ND	ND	1300
	Fuel Oil Pretest	4J-3	0.35	ND	0.14
	Fuel Oil Post Test	4J-3	0.30	ND	0.13
3	Process Water Pretest	4J-4	ND	ND	170
	Process Water Post Test	4J-4	ND	ND	190
	Scrubber Liquor Pretest	4J-4	ND	420	460
	Scrubber Liquor Post Test	4J-4	ND	400	380
	Scrubber Brine Pretest	4J-4	270	4700	18000
	Scrubber Brine Post Test	4J-4	240	8100	19000
	Caustic Pretest	4J-4	ND	ND	1300
	Caustic Post Test	4J-4	ND	ND	1300
	Fuel Oil Pretest	4J-4	0.22	ND	0.27
	Fuel Oil Post Test	4J-4	0.31	ND	ND

(continued)

TABLE 5-36 (continued)

Run No.	Sample ID	Sample No.	Concentration (mg/L) F^-	PO_4^{-3}	Cl^-
4	Process Water Pretest	4J-6	ND	ND	190
	Process Water Post Test	4J-6	ND	ND	180
	Scrubber Pretest	4J-6	22	780	1500
	Scrubber Liquor Post Test	4J-6	28	1300	2000
	Scrubber Brine Pretest	4J-6	270	9600	19000
	Scrubber Brine Post Test	4J-6	270	7300	20000
	Caustic Pretest	4J-6	ND	ND	1400
	Caustic Post Test	4J-6	ND	ND	1200
	Fuel Oil Pretest	4J-6	0.34	ND	0.27
	Fuel Oil Post Test	4J-6	0.32	ND	ND

[a]Detection limits	F^-	PO_4^{-3}	Cl^-
Brine Samples	80	120	1600
Scrubber Liquor Samples	8	12	160
Process Water Samples	0.8	1.2	16
Caustic Samples	8	12	160
Fuel Oil Samples	0.08	0.12	1.6

TABLE 5-37. METHOD 5 MULTIPLE METALS TRAIN CONDITIONS AND RESULTS

Parameter	Units	Run 1	Run 2	Run 3	Run 4
Date	--	3/4/92	3/5/92	3/5/92	3/12/92
Sample Time	minutes	72	72	72	72
Sample Volume	dscf	59.712	59.596	57.818	67.943
Stack Gas Flow Rate	dscfm	10417	10667	10417	12033
Stack Gas Temperature	°F	182	182	178	184
Stack Gas Moisture	% volume	39.4	38.8	37.6	39.3
Percent Isokinetic		99.1	96.5	95.9	97.6
Part. Catch	mg	0.6	3.8	4.5	2.1
Part. Emission Rate	lb/hr	0.0138	0.0899	0.107	0.0491
Part. Conc. @ 7% O_2	gr/dscf mg/dscm	0.00031 0.703	0.00173 3.96	0.00211 4.83	0.00085 1.94
Part. Conc. @ 12% CO_2	gr/dscf mg/dscm	0.00031 0.760	0.00193 4.42	0.00236 5.40	0.00095 2.18
Oxygen Concentration	%	13.9	13.0	13.0	13.1
CO_2 Concentration	%	5.6	6.1	6.1	6.0
Leak Checks:					
Pitot Pretest		pass	pass	pass	pass
Pitot Post-test		pass	pass	pass	pass
Train Pretest	cfm at in. Hg	0.002 15	0.006 15	0.008 15	0.003 15
Train Post-test	cfm at in. Hg	0.004 15	0.001 15	0.008 15	0.004 14

Table 5-38. JACADS DFS Test Run Metal Train Results
All results are in total µg

Sample Description	Tl	As	Se	Cr	Cd	Pb	Ba	Be	Ag	Sn	Sb	P	Zn	Co	Ni	B	Mn	V	Cu	Hg
DFS Test Run Blank (B)																				
Front	<1[a]	<5	<5	2.79	<1	<5	<10	<0.5	<2	<5	<5	166	27.1	<2	<3	337	1.44	<5	1.58	<0.12
Back	<1	<5	<5	1.42	<1	<5	<10	<0.5	<2	35.6	<5	32.5	24.9	<2	<3	56.0	1.62	<5	<5	<0.15
Mercury																				<0.12
Front Field Blank	<1	<5	<5	2.29	<1	<5	<10	<0.5	<2	<5	<5	157	<5	<2	<3	380	1.21	<5	1.14	<0.12
Back Field Blank	<1	<5	<5	<1	<1	<5	<10	<0.5	<2	6.96	<5	<10	9.84	<2	<3	<10	0.63	<5	<5	<0.15
Mercury Field Blank																				<0.03

(continued)

Table 5-38. JACADS DFS Test Run Metal Train Results (continued)
All results are in total µg

Sample Description	Tl	As	Se	Cr	Cd	Pb	Ba	Be	Ag	Sn	Sb	P	Zn	Co	Ni	S	Mn	V	Cu	Hg
DFS Test Run #1																				
Front	<1	<5	<5	3.74	1.98	68.4	<10	<0.5	<2	<5	<5	185	24.6	<2	3.05	372	192	<5	3.66	<0.12
Back	<1	<5	<5	8.96	2.90	25.2	<10	1.12	<2	38.9	<5	52.8	211	<2	4.94	11.5	240	<5	10.4	<0.39
Mercury																				0.19
Front Field Blank	<1	<5	<5	2.17	<1	<5	<10	<0.5	<2	<5	<5	148	5.36	<2	<3	376	3.79	<5	<1	<0.12
Back Field Blank	<1	<5	<5	<1	<1	<5	<10	<0.5	<2	10.8	<5	<10	6.37	<2	<3	<10	0.66	<5	<5	<0.15
Mercury Field Blank																				<0.03
DFS Test Run #2																				
Front	<1	<5	<5	3.27	2.15	87.5	<10	<0.5	<2	<5	<5	164	27.9	<2	3.36	381	1.83	<5	2.75	<0.12
Back	<1	<5	<5	1.48	<1	<5	<10	<0.5	<2	30.5	<5	32.9	40.6	<2	<3	34.5	1190	<5	<5	<0.37
Mercury																				0.19
Front Field Blank	<1	<5	<5	<1	<1	6.26	<10	<0.5	<2	<5	<5	<10	<5	<2	<3	<10	0.93	<5	1.02	<0.12
Back Field Blank	<1	<5	<5	<1	<1	<5	<10	<0.5	<2	*	*	*	*	*	*	*	*	*	*	<0.15
Mercury Field Blank																				<0.03

(continued)

Table 5-38. JACADS DFS Test Run Metal Train Results (continued)
All results are in total µg

Sample Description	Tl	As	Se	Cr	Cd	Pb	Ba	Be	Ag	Sn	Sb	P	Zn	Co	Ni	B	Mn	V	Cu	Hg
DFS Test Run #3																				
Front	<1	<5	<5	3.16	1.59	60.8	<10	<0.5	<2	<5	<5	191	18.0	<2	<3	390	3.24	<5	2.31	<0.12
Back	<1	<5	<5	2.09	<1	<5	<10	<0.5	<2	36.7	<5	35.3	101	<2	3.45	39.2	148	<5	5.36	<0.36
Mercury																				0.33
Front Field Blank	<1	<5	<5	<1	<1	5.39	<10	<0.5	<2	<5	<5	<10	<5	<2	<3	<10	0.72	<5	1.34	<0.12
Back Field Blank	<1	<5	<5	<1	<1	<5	<10	<0.5	<2	8.82	<5	<10	<5	<2	<3	<10	0.60	6.17	<5	<0.15
Mercury Field Blank																				<0.03
DFS Test Run #4																				
Front	<1	<5	<5	3.55	2.03	100	<10	<0.5	<2	<5	<5	196	20.5	<2	<3	396	2.59	<5	1.76	<0.12
Back	<1	<5	<5	1.05	<1	<5	<10	<0.5	<2	32.9	<5	35.8	34.2	<2	<3	45.6	425	<5	5.59	<0.36
Mercury																				0.77
Front Field Blank	<1	5.46	<5	2.37	<1	<5	<10	<0.5	<2	<5	<5	177	<5	<2	<3	422	1.27	<5	<1	<0.12
Back Field Blank	<1	<5	<5	1.57	<1	<5	<10	<0.5	<2	7.03	<5	10.6	<5	<2	<3	<10	<0.5	<5	<5	<0.15
Mercury Field Blank																				<0.03

[a]All < values are indicative of limits of quantification.

*Not analyzed. Sample lost-broken

TABLE 5-39. METALS ANALYSIS RESULTS
DFS PROCESS SAMPLES
All results in µg/mL except Mercury (µg/l)

Sample #	Sample ID	As	Se	Cr	Cd	Pb	Ni	Sn	Tl	Sb	Zn	Co	Ba	V	Be	Cu	Ag	Hg
	Test Run 1																	
4J-2-5	Scrubber Liquor Pretest	<0.1[a]	<0.1	0.12	0.27	16.5	<0.1	<0.1	<0.2	<0.1	2.47	<0.1	<0.2	<0.1	<0.05	0.10	<0.1	<0.5
4J-2-37	Scrubber Liquor Post Test	<0.1	<0.1	<0.1	0.29	17.1	<0.1	<0.1	<0.2	<0.1	1.96	<0.1	<0.2	<0.1	<0.05	<0.1	<0.1	<0.5
4J-2-14	Scrubber Brine Pretest	1.08	<0.1	2.88	5.16	440	0.74	0.35	<0.2	0.41	70.4	<0.1	0.85	<0.1	<0.05	4.50	<0.1	<0.5
4J-2-45	Scrubber Brine Post Test	1.14	<0.1	3.69	8.92	451	1.05	0.70	0.23	0.93	112	<0.1	0.23	0.20	<0.05	8.80	<0.1	<0.5
4J-2-27	Process Water Pretest	<0.1	<0.1	<0.1	<0.1	<0.1	<0.1	<0.1	<0.2	<0.1	4.21	<0.1	<0.2	<0.1	<0.05	<0.1	<0.1	<0.5
4J-2-62	Process Water Post Test	<0.1	<0.1	<0.1	<0.1	<0.1	<0.1	<0.1	<0.2	<0.1	0.19	<0.1	<0.2	<0.1	<0.05	<0.1	<0.1	<0.5
4J-2-20	Caustic Pretest	<0.1	<0.1	<0.1	<0.1	0.42	<0.1	<0.1	<0.2	<0.1	0.49	<0.1	<0.2	<0.1	<0.05	<0.1	<0.1	<0.5
4J-2-55	Caustic Post Test	<0.1	<0.1	<0.1	<0.1	<0.1	<0.1	<0.1	0.57	<0.1	9.60	0.12	1.39	0.25	<0.05	0.41	<0.1	<0.5
4J-2-31	Fuel Oil Pretest	<0.2	<0.2	<0.2	<0.2	<0.2	<0.2	<0.2	<0.2	<0.2	<0.2	<0.2	<0.2	<0.2	<0.1	<0.2	<0.2	<0.5
4J-2-66	Fuel Oil Post Test	<0.2	<0.2	<0.2	<0.2	<0.2	<0.2	<0.2	<0.2	<0.2	<0.2	<0.2	<0.2	<0.2	<0.1	<0.2	<0.2	<0.5
	Test Run 2																	
4J-3-5	Scrubber Liquor Pretest	<0.1	<0.1	<0.1	0.17	11.0	<0.1	<0.1	<0.2	<0.1	1.31	<0.1	<0.2	<0.1	<0.05	<0.1	<0.1	<0.5
4J-3-37	Scrubber Liquor Post Test	<0.1	<0.1	<0.1	0.24	15.1	<0.1	<0.1	<0.2	<0.1	1.81	<0.1	<0.2	<0.1	<0.05	<0.1	<0.1	<0.5
4J-3-13	Scrubber Brine Pretest	0.59	<0.1	2.71	6.18	427	0.69	0.44	<0.2	0.44	58.5	<0.1	0.74	<0.1	<0.05	3.69	<0.1	<0.5
4J-3-45	Scrubber Brine Post Test	0.71	<0.1	2.68	6.96	670	0.74	0.55	0.36	0.55	79.2	<0.1	3.49	<0.1	<0.05	5.05	<0.1	<0.5
4J-3-26	Process Water Pretest	<0.1	<0.1	<0.1	<0.1	<0.1	<0.1	<0.1	<0.2	<0.1	<0.1	<0.1	<0.2	<0.1	<0.05	<0.1	<0.1	<0.5
4J-3-61	Process Water Post Test	<0.1	<0.1	<0.1	<0.1	<0.1	<0.1	<0.1	<0.2	<0.1	<0.1	<0.1	<0.2	<0.1	<0.05	<0.1	<0.1	<0.5
4J-3-20	Caustic Pretest	<0.1	<0.1	<0.1	<0.1	<0.1	<0.1	<0.1	<0.2	<0.1	0.52	<0.1	<0.2	<0.1	<0.05	<0.1	<0.1	<0.5
4J-3-55	Caustic Post Test	<0.1	<0.1	<0.1	<0.1	<0.1	<0.1	<0.1	<0.2	<0.1	0.45	<0.1	<0.2	<0.1	<0.05	<0.1	<0.1	<0.5
4J-3-31	Fuel Oil Pretest	<0.2	<0.2	<0.2	<0.2	<0.2	<0.2	<0.2	<0.2	<0.2	<0.2	<0.2	<0.2	<0.2	<0.1	<0.2	<0.2	<0.5
4J-3-67	Fuel Oil Post Test	<0.2	<0.2	<0.2	<0.2	<0.2	<0.2	<0.2	<0.2	<0.2	<0.2	<0.2	<0.2	<0.2	<0.1	<0.2	<0.2	<0.5

[a]All < values are indicative of limits of quantification.

TABLE 5-39 (CONTINUED)
METAL ANALYSIS PROCESS SAMPLES
DFS PROCESS SAMPLES
All results in µg/mL except Mercury (µg/l)

Sample #	Sample ID	As	Se	Cr	Cd	Pb	Ni	Sn	Tl	Sb	Zn	Co	Ba	V	Be	Cu	Ag	Hg
	Test Run 3																	
4J-4-5	Scrubber Liquor Pretest	<0.1	<0.1	<0.1	0.35	20.1	<0.1	<0.1	<0.2	<0.1	2.23	<0.1	<0.2	<0.1	<0.05	<0.1	<0.1	<0.5
4J-4-37	Scrubber Liquor Post Test	<0.1	<0.1	<0.1	0.28	16.9	<0.1	<0.1	<0.2	<0.1	1.60	<0.1	<0.2	<0.1	<0.05	<0.1	<0.1	<0.5
4J-4-13	Scrubber Brine Pretest	0.64	<0.1	3.34	9.12	373	0.90	0.67	0.35	0.69	114	<0.1	<0.2	<0.1	<0.05	6.48	<0.1	<0.5
4J-4-45	Scrubber Brine Post Test	0.79	<0.1	3.83	12.2	708	1.22	0.83	0.41	0.83	146	<0.1	0.88	0.12	<0.05	7.12	<0.1	<0.5
4J-4-27	Process Water Pretest	<0.1	<0.1	<0.1	<0.1	<0.1	<0.1	<0.1	<0.2	<0.1	<0.1	<0.1	<0.2	<0.1	<0.05	<0.1	<0.1	<0.5
4J-4-98	Process Water Post Test	<0.1	<0.1	<0.1	<0.1	<0.1	<0.1	<0.1	<0.2	<0.1	0.44	<0.1	<0.2	<0.1	<0.05	<0.1	<0.1	<0.5
4J-4-20	Caustic Pretest	<0.1	<0.1	<0.1	<0.1	<0.1	<0.1	<0.1	<0.2	<0.1	0.56	<0.1	<0.2	<0.1	<0.05	<0.1	<0.1	<0.5
4J-4-56	Caustic Post Test	<0.1	<0.1	<0.1	<0.1	<0.1	<0.1	<0.1	2.70	<0.1	4.49	0.12	0.43	<0.1	<0.05	<0.1	<0.1	<0.5
4J-4-32	Fuel Oil Pretest	<0.2	<0.2	<0.2	<0.2	<0.2	<0.2	<0.2	<0.2	<0.2	<0.2	<0.2	<0.2	<0.2	<0.1	<0.2	<0.2	<0.5
4J-4-66	Fuel Oil Post Test	<0.2	<0.2	<0.2	<0.2	<0.2	<0.2	<0.2	<0.2	<0.2	<0.2	<0.2	<0.2	<0.2	<0.1	<0.2	<0.2	<0.5
	Test Run 4																	
4J-6-6	Scrubber Liquor Pretest	<0.1	<0.1	0.18	0.12	6.34	<0.1	<0.1	<0.2	<0.1	1.71	<0.1	<0.2	<0.1	<0.05	0.18	<0.1	<0.5
4J-6-38	Scrubber Liquor Post Test	<0.1	<0.1	0.55	0.58	32.9	<0.1	<0.1	<0.2	<0.1	5.74	<0.1	0.20	<0.1	<0.05	0.48	<0.1	<0.5
4J-6-14	Scrubber Brine Pretest	0.30	<0.1	1.47	0.45	67.2	0.14	0.26	<0.2	0.42	17.5	<0.1	0.18	<0.1	<0.05	3.44	<0.1	<0.5
4J-6-45	Scrubber Brine Post Test	0.28	<0.1	2.75	0.84	126	0.17	0.19	<0.2	0.59	27.2	<0.1	<0.2	<0.1	<0.05	3.64	<0.1	<0.5
4J-6-28	Process Water Pretest	<0.1	<0.1	<0.1	<0.1	<0.1	<0.1	<0.1	<0.2	<0.1	<0.1	<0.1	<0.2	<0.1	<0.05	<0.1	<0.1	<0.5
4J-6-63	Process Water Post Test	<0.1	<0.1	<0.1	<0.1	<0.1	<0.1	<0.1	<0.2	<0.1	<0.1	<0.1	<0.2	<0.1	<0.05	<0.1	<0.1	<0.5
4J-6-20	Caustic Pretest	<0.1	<0.1	<0.1	<0.1	<0.1	<0.1	<0.1	<0.2	<0.1	0.60	<0.1	<0.2	<0.1	<0.05	<0.1	<0.1	<0.5
4J-6-55	Caustic Post Test	<0.1	<0.1	<0.1	<0.1	<0.1	<0.1	<0.1	<0.2	<0.1	0.52	<0.1	<0.2	<0.1	<0.05	<0.1	<0.1	<0.5
4J-6-31	Fuel Oil Pretest	<0.2	<0.2	<0.2	<0.2	<0.2	<0.2	<0.2	<0.2	<0.2	0.21	<0.2	<0.2	<0.2	<0.1	<0.2	<0.2	<0.5
4J-6-66	Fuel Oil Post Test	<0.2	<0.2	<0.2	<0.2	<0.2	<0.2	<0.2	<0.2	<0.2	<0.2	<0.2	<0.2	<0.2	<0.1	<0.2	<0.2	<0.5

[a]All < values are indicative of limits of quantification.

TABLE 5-40. JACADS DFS TCLP METALS ANALYSIS
All results in µg/mL

DFS Test Run	Sample ID	Sn	Tl	As	Se	Cr	Sb	Zn	Cd	Pb	Co	Ni	Ba	V	Be	Cu	Ag	Hg
1	MDC Ash Composite, Bin 110	<0.1[a]	<0.2	<0.1	<0.1	<0.1	<0.1	69.3	5.21	0.65	<0.1	0.10	5.17	<0.1	<0.05	<0.1	<0.2	<0.0003
2	MDC Ash Composite, Bin 120	<0.1	<0.2	<0.1	<0.1	<0.1	<0.1	23.2	6.90	0.92	<0.1	<0.1	2.19	<0.1	<0.05	<0.1	<0.2	<0.0003
3	MDC Ash Composite, Bin 104	<0.1	<0.2	<0.1	<0.1	<0.1	<0.1	89.4	5.50	0.84	<0.1	0.13	3.45	<0.1	<0.05	<0.1	<0.2	<0.0003
4	MDC Ash Composite, Bin 106	<0.1	<0.2	<0.1	<0.1	<0.1	0.12	94.0	11.3	0.67	<0.1	<0.1	3.35	<0.1	<0.05	<0.1	<0.2	<0.0003
1	Cyclone Ash	<0.1	<0.2	<0.1	<0.1	<0.1	<0.1	13.7	1.05	0.18	<0.1	0.80	<0.2	<0.1	<0.05	<0.1	<0.2	<0.0003
2	Cyclone Ash	<0.1	1.49	0.17	<0.1	0.60	<0.1	94.1	2.27	6.67	<0.1	2.91	<0.2	<0.1	<0.05	0.14	<0.2	<0.0003
3	Cyclone Ash	<0.1	1.27	0.17	<0.1	0.42	<0.1	95.3	2.70	9.79	<0.1	2.12	<0.2	<0.1	<0.05	0.25	<0.2	<0.0003

[a]All < values are indicative of limits of quantification.

MMT Back Half:

Back half ICP results are corrected for the fraction removed for mercury analysis. If the total original sample volume is 600 mL, then 100 mL is removed for mercury analysis, and the remaining 500 mL is reduced to a final volume of 100 mL during digestion. If the ICP result for Cu is 1.24 μg/mL, then total Cu = 1.24 μg/mL x 100 mL x $\frac{600}{500}$ = 149 μg.

MMT Mercury:

Mercury results by cold vapor-AA are expressed as the weight (in μg) of mercury in the total original volume of the sample. All mercury standards are made up to 100 mL volume, and thus an aliquot of similar volume is taken from the actual sample. If a 100-mL aliquot is removed from a 600-mL sample and gives a result of 1.2 μg/L, then total μg Hg = 1.2 μg/L x 0.6 L = 0.72 μg Hg.

Matrix spikes and spike duplicates:

Spike recoveries are calculated by

$$\% \text{ Recovery} = \frac{\text{Conc. of spiked sample - conc. of unspiked sample}}{\text{spike conc. level}} \times 100\%$$

Process Samples:

Element concentrations in process samples are determined with the use of linear-regression analysis, which is normally performed by the ICP and printed in report form. But mercury linear-regression analyses were hand-calculated and are documented in SRI notebooks.

5.3.7 pH Analysis

The pH levels of the process samples were measured with a pH electrode after the samples were delivered to the SRI laboratory. The pH values for all aqueous samples are given in Table 5-41. The caustic solution contained about 18% NaOH, and the pH levels in the caustic samples were, therefore, always at the upper limit (~13.5) of the meter.

5.3.8 Particulate Measurements

Measurements of particle concentrations were made on samples from the MMT and AT. The acetone probe rinse and the filter from each run were dried to a constant weight before they were analyzed. The trains passed all required pretest and post-test leak checks of the pitot tube and sampling system.

The particulate emission rates as calculated from the M5MMT results for the four burns were, respectively, 0.014, 0.090, 0.107, and 0.049 lb/hr. The rates as calculated from the M5AT results for the four burns were, respectively, 0.032, 0.121, 0.089, and 0.024 lb/hr. The average results for the four sets of measurements of particulate concentration, after adjustment to 7% oxygen in the flue gas, were 1.10, 4.55, 4.38, and 1.51 mg/dscm

TABLE 5-41. SAMPLE REACTIVITY AND pH[a]

Run No.	Sample ID	Sample No.	Reactivity Cyanide	Reactivity Sulfide	pH
1	Scrubber Liquor Pretest	4J-2-6	<0.025	<1.0	8.0
	Scrubber Liquor Post Test	4J-2-38	<0.025	<1.0	7.9
	Scrubber Brine Pretest	4J-2-13	0.052	<1.0	8.8
	Scrubber Brine Post Test	4J-2-46	<0.025	<1.0	8.8
	HDC Ash Comp[a]	4J2	<0.01	<25	
	Cyclone Ash[a]	4J-2-68	<0.01	<25	
2	Scrubber Liquor Pretest	4J-3-6	<0.025	<1.0	7.7
	Scrubber Liquor Post Test	4J-3-38	<0.025	<1.0	7.7
	Scrubber Brine Pretest	4J-3-14	<0.025	<1.0	8.8
	Scrubber Brine Post Test	4J-3-46	<0.025	<1.0	8.9
	HDC Ash Comp[a]	4J3	<0.01	<25	
3	Scrubber Liquor Pretest	4J-4-6	<0.025	<1.0	7.8
	Scrubber Liquor Post Test	4J-4-38	<0.026	<1.0	7.6
	Scrubber Brine Pretest	4J-4-14	<0.025	11.2	8.9
	Scrubber Brine Post Test	4J-4-46	0.161	17.6	8.8
	HDC Ash Comp[a]	4J4	<0.01	<25	
4	Scrubber Liquor Pretest	4J-6-5	<0.025	<1.0	8.2
	Scrubber Liquor Post Test	4J-6-37	0.03	<1.0	8.4
	Scrubber Brine Pretest	4J-7-13	0.027	<1.0	9.0
	Scrubber Brine Post Test	4J-6-46	0.476	12.8	9.0
	HDC Ash Comp[a]	4J6	10.01	<25	

[a]Ash samples analyzed for reactivity only and reported as mg/Kg.

respectively. These values were all well below the allowable limit of 180 mg/dscm.

Formulas and nomenclature for particulate concentrations and emission rates are given in Appendix D.

5.3.9 Particle Size Distributions

Particle-size distribution measurements were made during rest runs (TRs) 1, 2, and 4. The measurements were wholly successful for TR1 and TR4, but not for TR2. The probe heater failed during TR2, resulting in the loss of data for the two smallest particle-size fractions for that run. The probe-heater problem was not diagnosed and fixed in time to permit a sample to be obtained during TR3, which was run on the same day as TR2. A good particle-sizing run was also obtained on 3/6/92 during what was intended to be TR4, called TR4A here. The latter test was aborted near the end of the run because of excessive time losses in feed stoppages. However, the results from the particle-size sampling exercise in TR4A were retained for use in this report to provide information on particle-size data for the DFS.

The particulate concentration and size distribution showed considerable variation over the course of the tests. The very low particle-catch weights in each stage of the sampler (ranging from zero to 1.67 mg, with most stages collecting less than 0.2 mg) made the uncertainties in the catch weights (typically about 0.05 mg) relatively large as compared to the weights themselves. Averaging of data from several runs provided a means of reducing the effects of uncertainties in the particle weights. Average values for the three complete sets of data (TR1, TR4A, and TR4) plus the valid portion of the the data from TR2 are shown in Figures 5-5 and 5-6. The cascade-impactor data-analysis system that was used to reduce the particle-size data permitted the exclusion of data over selected size ranges, such as those affected by the probe heat failure in TR2, when combining data from several runs. Thus, all of the information from the run in which the probe heat failed was not lost.

Figure 5-5 shows the size distributions in a differential mass-distribution format (dM/dLogD vs. diameter). This format shows the concentration at each particle size versus size, with the area under the curve between any two size values equalling the total concentration over that size interval. Figure 5-6 shows the average distribution on a cumulative-percent-less-than-size basis. In both figures, the solid lines represent the averages, and the dotted lines represent 90% confidence limits for the averages. The mass median diameter of the particulate matter was approximately 10 μm. The distributions were generally bimodal, with the bulk (85 to 90%) of the particulate matter in a mode centered at about 12 μm. The remaining 10 to 15% of the particulate matter occurred in a mode centered at about 0.4 μm. The concentrations in both modes varied considerably from run to run, but the variation was relatively greater in the coarser of the two modes. Detailed results for the individual runs can be found in Appendix D.

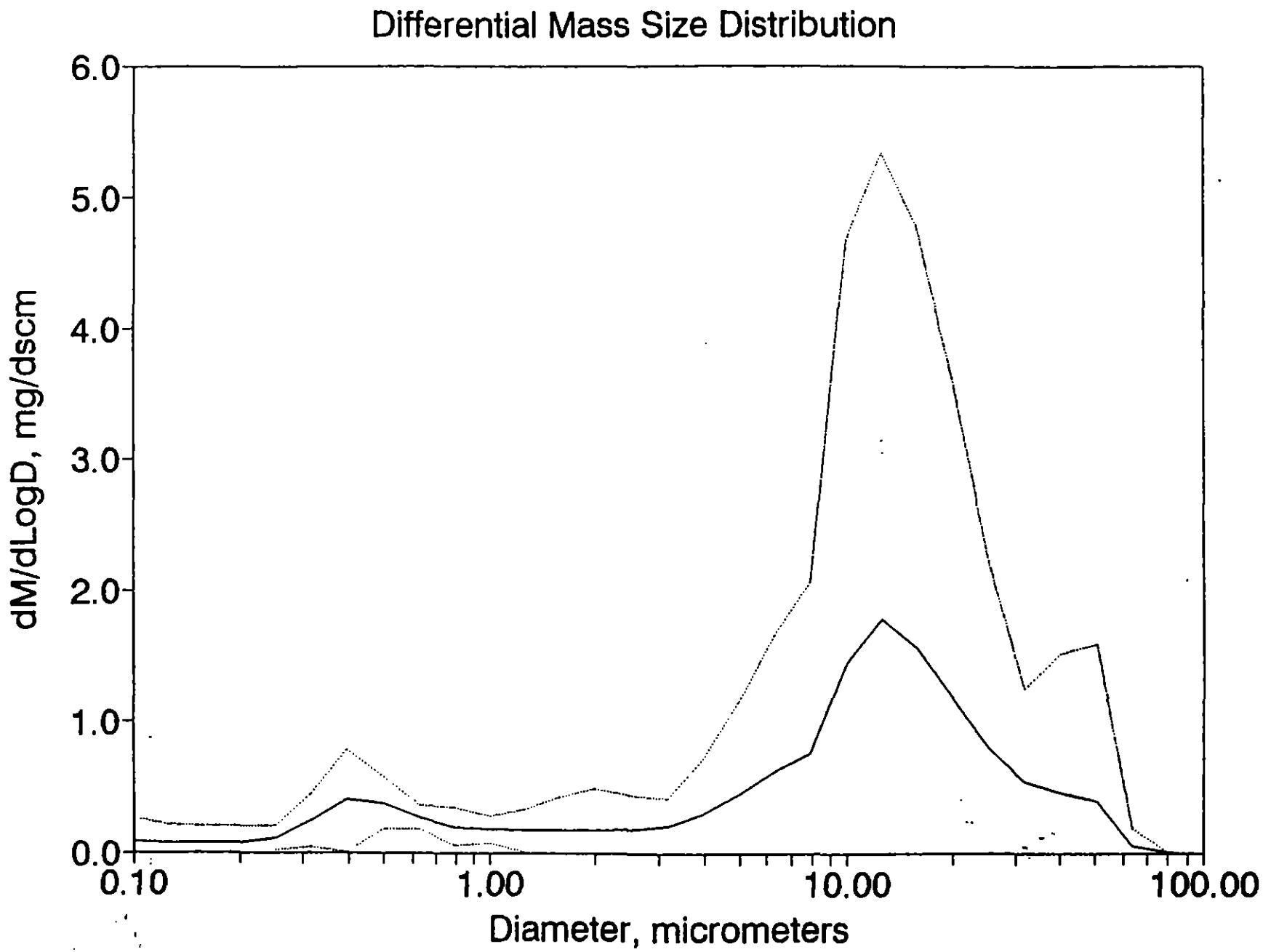

Figure 5-5. Average differental mass particle size distribution from DFS Tests 1,2,4 abort and 4. Solid line represents average and dotted lines represent 90% confidence limits

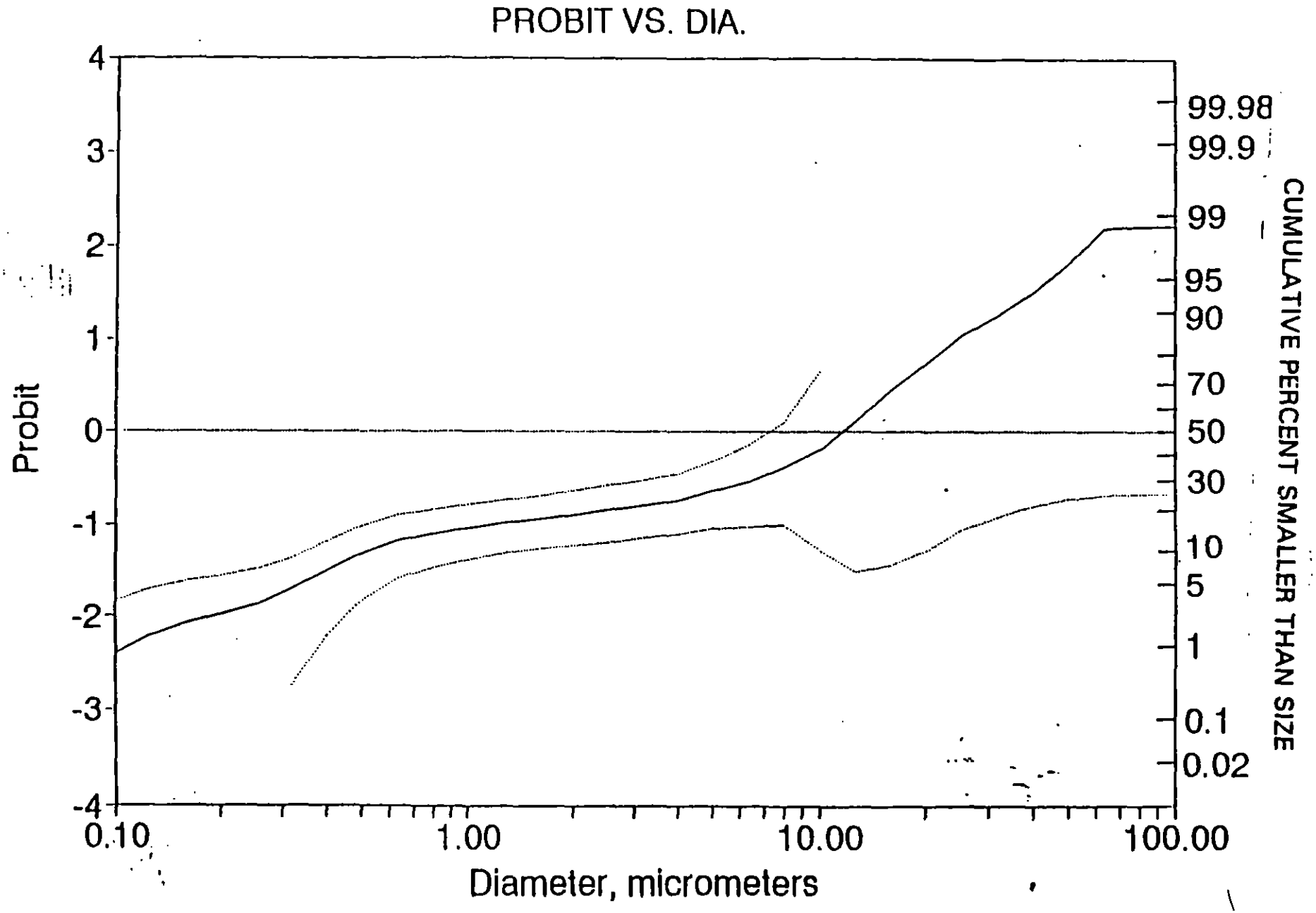

Figure 5-6. Average particle size distribution for DFS tests 1,2,4 A and 4 on cumulative percent less than size basis. Solid line represents size distribution and dotted lines represent 90% confidence limits

5.4 Emission Rates and DREs of the POHCs

5.4.1 Results

Destruction and removal efficiency (DRE) can be calculated from the equation:

$$\%DRE = 100x((Total\ Fed) - (Total\ Emitted))/(Total\ Fed)$$

where the Total Fed is the total quantity of the analyte fed while the stack emissions were being sampled and the Total Emitted is the total quantity of residual analyte discharged with the stack gases during the sampling period. The DRE is calculated in this fashion to avoid problems related to the manner in which the test program was conducted. All parties concerned with the tests agreed that sampling would not be stopped for minor short duration feed stoppages such as those occasioned by HDC bin changes. Thus some sampling took place during brief periods without feed. When it became evident that a feed stoppage would last for a significant length of time sampling would be stopped per the original test plan. Although the PDAR average feed rate accurately reflects the actual processing rate, if it were used to calculate the POHC feed rate a high bias would be introduced into the quantity fed because of the sampling over-runs during feed stoppages. The use of total quantities fed and total quantities emitted while sampling is the most direct and most conservative manner of calculating an unbiased DRE. The actual count of rockets processed while the trains were sampling was therefore used to calculate the quantities of the POHCs that were fed.

PCB and nitroglycerin were designated as the POHCs. The resulting total quantities fed and total emissions for each POHC are given by the equations:

$$Total\ Fed\ (lb) = (Total\ rockets\ fed) \times (quantity\ of\ POHC\ per\ rocket,\ lb)$$

and

$$Total\ Emitted\ (lb) = ((Concentration,\ mg/dscm) \times (1\ g/1000\ mg) \times (0.437\ grains/dscf)/(g/dscm)) \times (1\ lb/7000\ grains) \times (Stack\ gas\ flow,\ dscfm) \times (240\ min.)$$

$$= 0.000015 \times (concentration,\ mg/dscm) \times (Stack\ gas\ flow\ rate,\ dscfm)$$

For the four test runs, the total emissions of PCB are thus:

$$Total\ Emitted\ 1 = 0.000015 \times 2.46 \times 10^{-8} \times 12161$$

$$= 4.49 \times 10^{-7}\ lb$$

$$Total\ Emitted\ 2 = 0.000015 \times 1.74 \times 10^{-6} \times 11404$$

$$= 6.21 \times 10^{-7}\ lb$$

Total Emitted 3 = 0.000015 X $2.56X10^{-5}$ X 11370

= $4.37X10^{-6}$ lb

Total Emitted 4 = 0.000015 X $6.49X10^{-6}$ X 11907

= $1.16X10^{-6}$ lb

The total quantities of nitroglycerin emitted are:

Total Emitted 1 = 0.000015 X $2.38X10^{-3}$ X 12208

= $4.36X10^{-4}$ lb

Total Emitted 2 = 0.000015 X $4.02X10^{-2}$ X 11531

= 6.95X10-3 lb

Total Emitted 3 = 0.000015 X $1.76X10^{-2}$ X 11269

= $2.97X10^{-3}$ lb

Total Emitted 4 = 0.000015 X $1.10X10^{-2}$ X11631

= $1.87X10^{-3}$ lb

The total quantities fed for the analytes of interest here (PCBs and nitroglycerin) are equal to the products of the total rockets fed and the quantity of the analyte in each rocket. PCBs in the feed were present in the shipping and firing tubes at an assumed concentration of 2700 ppm. The shipping and firing tubes each weighed 13.73 lbs so each rocket contained 0.03707lbs of PCBs (2700 x 13.73/1000000). The 19.25 lbs. of M-28 propellant in the rocket motor is 23.8% nitroglycerin so each rocket contained 4.58 lbs. of nitroglycerine (19.25 x 23.8/100). Actual counts of the numbers of rockets fed during the MM5 and STEM sampling periods for each test were respectively 118, 131, 113, and 109. Thus the total PCBs fed during each test were 4.37 lbs, 4.86 lbs, 4.19 lbs, and 4.04 lbs (.03707 X total rockets fed). The total nitroglycerin fed during each test was respectively 540.4 lbs, 600 lbs, 517.5 lbs, and 499.2 lbs (4.58 X total rockets fed). So the DREs were respectively:

for TR1

DRE PCBs = 100(4.37 - 4.49E-7)/4.37 percent

= 99.999989 percent

and

DRE NG = 100(540.4 - $4.36X10^{-4}$)/540.4 percent

= 99.999919 percent.

for TR2

DRE PCBs = 100(4.86 - 6.21E-7)/4.86 percent

= 99.999987 percent

and

DRE NG = 100(600 - $6.95X10^{-3}$)/600 percent

= 99.99884 percent.

for TR3

DRE PCBs = 100(4.19 - 4.37E-6)/4.19 percent

= 99.999896 percent

and

DRE NG = 100(517.5 - $2.97X10^{-3}$)/517.5 percent

= 99.99943 percent.

and for TR4

DRE PCBs = 100(4.04 - 1.16E-6)/4.04 percent

= 99.999971 percent

and

DRE NG = 100(499.2 - $1.87X10^{-3}$)/499.2 percent

= 99.99962 percent.

The TSCA requirement for the PCB DRE is that the DRE must be equal to or greater than 99.9999%. Thus this requirement was met in all but the third test and was very nearly met in the latter. The RCRA requirement for the DRE for NG is that the DRE be equal to or greater than 99.99% so that requirement was met in four tests.

All samples that were removed from the area of the facility first had to be certified as being free of agent. Accordingly, the JACADS laboratory analyzed all process liquids to certify them as being free of agent before samples were transported. Other types of samples were determined to be agent-free because of the prevailing incinerator-operating parameters.

6. QUALITY ASSURANCE AND QUALITY CONTROL

6.1 Background

Obtaining defensible results in a sampling and analysis program of the type carried out here requires that a thorough quality assurance/quality control (QA/QC) program be followed. Such a QA/QC program was followed in all laboratory functions that pertained to the chemical analyses that were performed in this program. Typical QA/QC devices and strategies are instrument and sampling-system calibrations, initial and continuing instrument-calibration verifications, sample preservation and identification, replicate samples and analyses, analysis of blank samples, matrix spikes, and surrogates (where appropriate), and maintaining complete chain-of-custody documentation for all samples. Details regarding the QA/QC programs implemented by each participant can be found in Appendix G (SRI Analytical Test Plan). Results of the QA/QC activities are provided in several other appendices and are summarized below.

As a routine QA/QC procedure, the laboratory analyzed both blank and spiked samples. The blank samples included method blanks (laboratory reagents), field blanks, and trip blanks. Blanks were prepared according to the appropriate methods and procedures. An extraction blank was prepared for each day of extractions. A blank was analyzed each day after the daily calibration check and before the analysis of samples for volatile organics. The spiked samples consisted of matrix spikes (MSs), matrix spike duplicates (MSDs), and spikes according to EPA-certified methods appropriate for the specific analytes that were determined and quantified in this work. The blank samples were used to detect any contamination that may have been introduced in the field or the laboratory and to establish background values that could be used to adjust or correct routine analytical results.

Matrix-spiked and duplicate matrix-spiked samples were also prepared by the applicable methods. Each process sample matrix (water, caustic, liquor brine, ash, TCLP) had associated with it an MS and an MSD that was prepared from one of the sets of samples. The MSs were used to check the performances and the recovery efficiencies of the various analytical methods used in this work. The post-test process-residue samples from test run 3 were used for preparing most process-sample MSs and MSDs. The MS and MSD analyses were performed in connection with the determinations of volatile organics, semivolatile organics, PCBs, PCDD/F, and metals. Also, internal standards and surrogate standards were used in all organics analyses. Moreover, the reagents used to prepare the M5AT were spiked with chloride at three levels to measure recovery, and the MM5s were spiked with one dioxin and two other chlorinated compounds prior to sampling to monitor train retention. In addition, blank MM5s, M5ATs, and MMTs that were open to ambient air were assembled and then disassembled. After rinsing these trains and collecting the rinses, all extracts and components (filter, sorbent, etc.) were sent to the laboratory for analysis. The resulting information was used to identify contamination associated with the recovery operation. The blank data were reported with the sample sheets; spikes and duplicates were as indicated

below. The appendices covering each type of sample relate which blanks and standards were analyzed with each sample.

The precision of the analyses was measured by preparing and analyzing several kinds of spikes and duplicates for all sample types. The surrogates and analytes used for spiking were chosen from among those that were suggested in the methods in SW846. For each method and matrix, the difference between the two duplicate analysis (MS and MSD) results was used to estimate the precision of the analysis, and the average spike recovery was used to estimate the bias of the analysis. The surrogate spikes, which were authentic standards that were added to every sample prior to sample processing and analysis, were used to provide QC on every sample by constantly monitoring for unusual matrix effects and gross sample-processing errors. The surrogate standards were compounds that were not likely to be found in the matrix.

VOA and VOST samples were shipped to SRI promptly enough that the analyses of the samples could be completed within 2 weeks of sample collection. Other samples were shipped as rapidly as DOT regulations allowed and were analyzed promptly. Samples that required refrigeration were shipped in ice chests and packed with blue ice to maintain a temperature of 4 °C. VOST and VOA samples were received at SRI on 3-9-92 and 3-16-92, and the remaining samples arrived between 3-10-92 and 3-20-92.

Chain-of-custody (COC) was maintained for the samples according to the QA Project Plan included in the Trial Burn Test Plan (Appendix A). These procedures required that samples be recorded on sample-custody tracking sheets and that these sheets be transferred, signed, and dated when samples were transferred from one individual to another. The COC documentation is contained in Appendix A. The procedures also required that the custodian maintain possession of the samples or that they be stored under secure conditions.

6.2 Semivolatile Organic Analysis

The stack-gas QA/QC samples included a train blank that consisted of an entire MM5; a field blank consisted of a filter, an XAD-2 sorbent trap, and all reagents required for the train assembly; an XAD-2 trip blank; and a laboratory blank for each matrix and for each day that samples were prepared.

The XAD-2 sorbent was treated with methylene chloride according to SW846 Method 0010. That is, a 40-g sample was treated (for the extraction of impurities and contaminants) with CH_2Cl_2, and the extract was analyzed by GC/MS to verify that the sorbent was contaminant-free prior to preparing the sorbent cartridges.

Before being shipped to the field, the XAD-2 sorbent traps were spiked with 104 μg of d_3-2,4,5-dichlorophenol, 200 μg of d_3-1,2,4-trichlorobenzene, and 2 ng of $^{37}Cl_4$-2,3,7,8-tetrachlorodibenzo-p-dioxin. These spikes were used to indicate the recovery of chlorinated acids, neutrals, and dioxins from the sample trains.

The PCDD/F analysis used several cleanup steps, and labeled standards were used to measure recoveries. An additional aliquot of $^{37}Cl_4$-2,3,7,8-TCDD as a cleanup-recovery standard was added to the dioxin fraction after extraction but prior to PCDD/F cleanup. Note, however, that fractions containing XAD-2 resin-tube extracts were not spiked with cleanup standard because the tubes were spiked with this compound before being shipped to the field. Immediately before the analysis step, the labeled recovery standards were added. Thus, the quantification of PCDD/F is based on the standards spiked prior to extraction.

The recoveries of $^{37}Cl_4$-2,3,7,8-TCDD (field spike recovery standard or cleanup standard for PCDD/Fs) for MM5 samples are given in Table 5-8. Generally, good recovery was obtained for this compound which had been spiked at the XAD-2 resin in MM5 tubes. The recoveries ranged from 8% to 84%. One blank had a low recovery of 8% and the back half of the train from test run 1 had a low recovery of 12%. The recoveries of $^{37}Cl_4$-2,3,7,8-TCDD used as a cleanup recovery standard for ash, process water, caustic, scrubber liquor brine and fuel oil were generally good.

In general, the recoveries of the isotopically labeled surrogates added to the sample prior to extraction were good. Low recoveries (8-25%) of tetra and penta surrogates were obtained from the test run 2 HDC ash (V04924). Also the recoveries for most surrogates were low (3-30% and 7-40%) respectively for test run 4 MM5 field blank resin plus water blank (V04826) and for test run 1 MM5 resin and back half (V04823).

Even when the recoveries of isotopically labeled PCDD/F surrogates fall outside the accepted range (40-120%) the calculated concentrations of target analytes are correct because the calculations of target analytes are based upon the amount of their isotopically labeled surrogates present in the sample. A good example is the MM5 matrix spike sample V04837 in which the recovery of surrogates ranged from 9-50% but the calculated percent recovery of target analytes spiked into the sample ranged from 69-155%. The recoveries for the matrix spike (MS) and matrix spike duplicate (MSD) for each sample type are given in Appendix H and are listed in the summary tables in Section 5. The recovery of each target analyte was generally good and the relative percent difference between the MS and MSD was less than 20% except for a few compounds in some of the matrices which were outside this range. The relative percent differences for MS and MSD samples are listed in Appendix H.

The daily continuing calibration for target PCDD/Fs generally met the acceptance criteria, however, even when some values were outside the acceptance range no PCDD/Fs were detected in any of the samples.

The recoveries of laboratory surrogates and matrix spikes were satisfactory, as shown in Table 5-6. The presence of PCBs in four of the seven field blanks but in only one of the three laboratory blanks suggests spurious contamination of some of the blanks. The laboratory blank that was contaminated with PCBs displayed a pattern of PCB components different from that detected in the samples. (In the one contaminated laboratory blank, the hexa-PCB is present in the highest concentration, whereas in each of the four MM5 train samples, the penta-PCB is present in the highest concentration.)

The recovery of the dichlorophenol ranged from 86% to 102%, except that one field blank (H01274) yielded a low recovery (33%). At a spike level of

104 μg, this may be considered excellent recovery. The recovery of trichlorobenzene ranged from 59% to 70% and was deemed adequate. The TCDD recoveries for the four test runs ranged from 40-90%, which was within the accepted range. The recoveries from test run 1 were lower, 25% and 12% from the filter and front wash and the rear and back wash respectively. Field and trip blank recoveries ranged from 8 to 74%.

Recoveries of the spikes used to measure extraction efficiencies for the MM5 semivolatile compounds are indicated on the data sheets included with the analyses in Appendix J. The recoveries for the sample trains ranged from a low of 4.64% for the somewhat volatile d_5-phenol to a high of 119% for less volatile terphenyl-d_{14}. The extraction solvent, toluene, eluted from the GC column over a long enough period of time to interfere with the quantitation of fluorophenol, and no results for fluorophenol are reported for the MM5 samples. This also sometimes interfered with phenol-d_5, so the low recoveries of phenol-d_5 can be due to this.

The QA/QC samples for the ash residue, scrubber liquor, brine, caustic, process water, and fuel oil included laboratory blanks (one for each day of extractions or each matrix), surrogate spikes (each sample), matrix spikes (one for each matrix), and matrix spike duplicates (one for each matrix). Surrogates were not measured in fuel oil samples because of the large dilution required of the samples.

Several samples had low recovery of one or more surrogates. The 2-fluorophenol and phenol-d_5 in particular gave very poor and erratic results. The results for fluorophenol were not reported for the ash samples (extracted with toluene) as the toluene interfered with the quantitation of the fluorophenol. The erratic results for phenol-d_5 and phenol were probably due to this also. The acid surrogates for the caustic samples were low due to the problems in making the sample acidic.

Matrix spikes and duplicates for semivolatile organics are in Appendix J. Most recoveries were within limits with a few exceptions. 4-Nitrophenol was not detected in the brine samples. This compound must be flagged as either not detectable or questionable in these samples. The acid spikes were not recovered in the caustic samples. This is due to the difficulty in making the caustic sample acidic. A measure of the precision of the analysis is given by the relative percent difference (RPD) for the MS and MSD. In most cases the RPD was less than 30% which is acceptable. The brine and caustic samples gave less precise results than the other samples, again probably due to difficulty in making samples acidic.

6.3 Volatile Organic Analysis

The volatiles QC samples included blanks (each 12 hour shift), surrogates (each sample), and matrix spike/matrix spike duplicate (each matrix

except VOST). The VOST tubes were conditioned for 16 hours at 180 °C under a flow of pre-purified nitrogen. Two sets of tubes from each conditioned batch were analyzed by GC/MS to confirm lack of interference.

In Run 4, the VOST tubes showed unusually high levels of acetone, methylene chloride, and toluene, which were not present in field or lab blanks. These three compounds were also found in extremely high levels in the condensates and condensate blank from Run 4. Perhaps the VOST field blank was not exposed to the same contaminated environment as the samples from Run 4. All compounds found in the condensates, including extremely high levels of acetone, were also present in the condensate blanks.

The samples were spiked with surrogates 1,2-dichloroethane-d_4, toluene-d_8, and 4-bromofluorobenzene (BFB). The target range for VOST recoveries is 50-150%; for aqueous process samples and condensates: 1,2-dichloroethane-d_4 76-114%; toluene-d_8 88-110%; BFB 86-115%. The surrogate recoveries for each sample are given in the data sheets in Appendix I. Several VOST tubes had a low recovery of BFB, but this surrogate has a high boiling point and is probably unsuitable as a VOST spiking compound. VOST audit results are given in Table 6-1.

Matrix spike and duplicate results for VOA aqueous process samples are presented in Tables 6-2 through 6-6. All VOA recoveries were within target limits. The precision as measured by the Relative Percent Difference of the matrix spike and duplicate analyses were better than 20% in all results.

Table 6-1. VOST Audit Results

Compound	Sample Concentration (ng/L)[a]			
	1	2	4	Average
Chloromethane	242	267	429	313
1,1-Dichloroethane	709	784	823	772
Acetone[b]	46.7	54.2	77.0	---
Toluene	561	683	524	589
Chlorobenzene	776	890	732	799

[a]Sample 3 not used due to loss of internal standard.
[b]Significant levels of compound in the blank, no average reported.

TABLE 6-2. MATRIX SPIKE/MATRIX SPIKE DUPLICATE RECOVERY
(VOA Analysis)

Sample ID: 4J-6-23
4J-6-23MS DFS Caustic Pretest
4J-6-23MSD

Compound	Spike added, (µg/L)	Sample concn., (µg/L)	Matrix Spike Concn., (µg/L)	Matrix Spike Recovery, %	Matrix Spike Duplicate Concn., (µg/L)	Matrix Spike Duplicate Recovery, %	RPD	% Recovery range SW-846
1,2-Dichloroethene-d_4[a]	50	NA[a]	NA	98.0	NA	97.6	2.46	76-114
Toluene-d_8[a]	50	NA	NA	95.4	NA	93.0	3.13	88-110
4-Bromofluorobenzene[a]	50	NA	NA	95.4	NA	98.0	2.65	86-115
1,1-Dichloroethene	50	ND[c]	44.8	89.6	45.6	91.3	1.90	50.5-150
Benzene	50	ND	50.4	101	50.0	100	0.99	64-136
Trichloroethene	50	ND	48.9	97.9	48.8	97.6	0.31	66.5-134
Toluene	50	ND	48.6	97.2	49.4	98.8	1.65	74.5-126
Chlorobenzene	50	ND	43.8	87.6	45.4	90.7	3.54	66-134

[a]Surrogate compound.
[b]NA - Not applicable.
[c]ND - Not detected (detection limit - 1 µg/L).

TABLE 6-3. MATRIX SPIKE/MATRIX SPIKE DUPLICATE RECOVERY
(VOA Analysis)

Sample ID: 4J-6-30
4J-6-30MS DFS Process Water Pretest
4J-6-30MSD

Compound	Spike added, (µg/L)	Sample concn., (µg/L)	Matrix Spike Concn., (µg/L)	Matrix Spike Recovery, %	Matrix Spike Duplicate Concn., (µg/L)	Matrix Spike Duplicate Recovery, %	RPD	% Recovery range SW-846
1,2-Dichloroethene-d_4[a]	50	NA[b]	NA	99.0	NA	104	5.19	76-114
Toluene-d_8[a]	50	NA	NA	98.8	NA	102	3.14	88-110
4-Bromofluorobenzene[a]	50	NA	NA	98.6	NA	101	2.38	86-115
1,1-Dichloroethene	50	ND[c]	54.4	109	55.4	111	1.80	50.5-150
Benzene	50	ND	47.6	95.2	51.0	102	6.67	64-136
Trichloroethene	50	ND	46.8	93.6	48.9	97.8	4.29	66.5-134
Toluene	50	ND	45.6	91.2	50.2	100	8.80	74.5-126
Chlorobenzene	50	ND	41.9	83.8	45.1	90.2	7.10	66-134

[a]Surrogate compound.
[b]NA - Not applicable.
[c]ND - Not detected (detection limit = 1 µg/L).

TABLE 6-4. MATRIX SPIKE/MATRIX SPIKE DUPLICATE RECOVERY
(VOA Analysis)

Sample ID: 4J-6-47
4J-6-47MS DFS Scrubber Brine Post Test
4J-6-47MSD

Compound	Spike added, (μg/L)	Sample concn., (μg/L)	Matrix Spike Concn., (μg/L)	Matrix Spike Recovery, %	Matrix Spike Duplicate Concn., (μg/L)	Matrix Spike Duplicate Recovery, %	RPD	% Recovery range SW-846
1,2-Dichloroethene-d_4[a]	50	NA[b]	NA	104	NA	111	2.72	76-114
Toluene-d_8[a]	50	NA	NA	96.8	NA	89.8	7.23	88-110
4-Bromofluorobenzene[a]	50	NA	NA	95.8	NA	94.4	1.46	86-115
1,1-Dichloroethene	50	ND[c]	40.4	80 8	39.9	79.8	1.24	50.5-150
Benzene	50	ND	42.4	84.8	47.6	95.2	10.9	64-136
Trichloroethene	50	ND	40.9	81.8	44.9	89.8	8.91	66.5-134
Toluene	50	ND	41.0	82.0	44.1	88.2	7.03	74.5-126
Chlorobenzene	50	ND	38.5	77.0	40.1	80.2	3.99	66-134

[a]Surrogate compound.
[b]NA = Not applicable.
[c]ND = Not detected (detection limit = 1 μg/L).

TABLE 6-5. MATRIX SPIKE/MATRIX SPIKE DUPLICATE RECOVERY
(VOA Analysis)

Sample ID: 4J-6-40
4J-6-40MS DFS Scrubber Liquor Post Test
4J-6-40MSD

Compound	Spike added, (µg/L)	Sample concn., (µg/L)	Matrix Spike Concn., (µg/L)	Matrix Spike Recovery, %	Matrix Spike Duplicate Concn., (µg/L)	Matrix Spike Duplicate Recovery, %	RPD	% Recovery range SW-846
1,2-Dichloroethene-d_4[a]	50	NA[b]	NA	106	NA	115	7.83	76-114
Toluene-d_8[a]	50	NA	NA	99.8	NA	99.0	0.80	88-110
4-Bromofluorobenzene[a]	50	NA	NA	102	NA	102	0.00	86-115
1,1-Dichloroethene	50	ND[c]	51.0	102	50.5	101	0.98	50.5-150
Benzene	50	u	45.2	90.4	45.6	91.2	0.88	64-136
Trichloroethene	50	u	45.6	91.2	45.4	90.8	0.44	66.5-134
Toluene	50	u	47.9	94.8	46.2	92.4	2.53	74.5-126
Chlorobenzene	50	u	44.9	89.8	42.4	84.8	5.57	66-134

[a]Surrogate compound.
[b]NA - Not applicable.
[c]ND - Not detected (detection limit - 1 µg/L).

TABLE 6-6. MATRIX SPIKE/MATRIX SPIKE DUPLICATE RECOVERY
(VOA Analysis)

Sample ID: 4J-6 COMP HDC ASH
4J-6 COMP MS HDC ASH
4J-6 COMP MSD HDC ASH

Compound	Spike added, (μg/L)	Sample concn., (μg/L)	Matrix Spike Concn., (μg/L)	Matrix Spike Recovery, %	Matrix Spike Duplicate Concn., (μg/L)	Matrix Spike Duplicate Recovery, %	RPD	% Recovery range SW-846
1,2-Dichloroethene-d_4[a]	50	NA[b]	NA	95.4	NA	101	5.54	76-114
Toluene-d_8[a]	50	NA	NA	92.8	NA	92.6	0.22	88-110
4-Bromofluorobenzene[a]	50	NA	NA	97.6	NA	96.8	0.82	86-115
1,1-Dichloroethene	50	ND[c]	40.1	80.2	39.6	79.3	0.11	50.5-150
Benzene	50	ND	45.4	90.8	46.9	93.9	3.30	64-136
Trichloroethene	50	ND	43.2	86.4	45.7	91.4	5.47	66.5-134
Toluene	50	ND	50.7	101	51.6	103	1.94	74.5-126
Chlorobenzene	50	ND	40.9	81.9	42.4	84.8	3.42	66-134

[a]Surrogate compound.
[b]NA - Not applicable.
[c]ND - Not detected (detection limit - 1 μg/L).

6.4 Metals Analysis

As a QC protocol for the process samples, the laboratory analyzed blank, duplicate and spiked samples of each matrix. Because the DFS and LIC trial burn samples were analyzed concurrently, matrix spikes for each matrix were taken from either the LIC or DFS burn and used for both reports. To determine matrix effects on the metal analyses, the samples were spiked with the seventeen metals analyzed. Target limits for metal recoveries were 70-130 %. Average recoveries for fuel oil, scrubber liquor, scrubber brine, and caustic QC samples were above acceptable levels for most of the metals spiked.

Metals spiking results for the process samples are given in Tables 6-7 through 6-11.

Recoveries for all spiked metals with the exception of silver for the process water QC samples were within 90-120 % with the highest relative percent difference being 12.5%.

The fuel oil spiked samples gave high recoveries for all metals except barium, antimony, lead and selenium with good reproducibility. The relative percent differences were less than five percent for all metals except silver and lead.

Low amounts for barium, antimony and tin were recovered for the scrubber liquor spiked samples. Relative percent differences varied from 0 to 82% with poorly recovered elements giving higher relative percent differences.

Scrubber brine samples gave acceptable results for all elements but silver, barium, tin, nickel and chromium.

Caustic QC samples gave acceptable average recoveries for all metals except silver, zinc, antimony and chromium. The consistently high relative percent differences for these sample results indicate a bias introduced during the spiking process.

The MMT QC samples (Tables 6-12 and 6-13) gave high recoveries for phosphorus due to phosphorus contamination in glassware. With the exception of silver and boron all other average recoveries were within acceptable limits.

Metals spiking results for the ash composite TCLP analyses are presented in Table 6-14. Recoveries were consistently high for the metals spiked with the exception of silver. Low levels of chloride in samples cause insoluble AgCl to form. Samples that contain chloride at low levels will cause poor recoveries of Ag. Average recoveries for tin and antimony had high relative percent differences.

The precision and accuracy in the results of the relatively clean sample matrices of process water, TCLP extracts, and metal train matrix spikes demonstrate the proficiency of the laboratory. Sample matrices such as the

T6-7.4J
5/28/92

TABLE 6-7. JACADS Process Samples QC Table
Fuel Oil
Matrix Spike/Matrix Spike Duplicate for the DFS

Element	Sample conc., µg/mL	Sample duplicate conc., µg/mL	Spike added µg/mL	Matrix Spike Conc., µg/mL	Matrix Spike % Recovery	Matrix Spike Duplicate Conc., µg/mL	Matrix Spike Duplicate % Recovery	Relative % Difference
Arsenic	<0.2	<0.2	2	2.16	109	2.09	104	4.7
Selenium	<0.2	<0.2	0.5	0.88	176	0.87	174	1.1
Chromium	<0.2	<0.2	2	1.95	98	1.86	93	5.2
Cadmium	<0.2	<0.2	0.5	0.44	88	0.43	86	2.3
Lead	<0.2	<0.2	2	0.35	18	0.20	10	57.1
Nickel	<0.2	<0.2	1	0.95	95	0.92	92	3.2
Tin	<0.2	<0.2	1	0.95	95	0.95	95	0
Thallium	<0.2	<0.2	20	17.5	88	17.2	86	2.3
Antimony	<0.2	<0.2	1	0.63	63	0.61	61	3.2
Zinc	<0.2	<0.2	1	0.86	86	0.88	88	2.3
Cobalt	<0.2	<0.2	1	0.92	92	0.95	95	3.2
Barium	<0.2	<0.2	20	<0.2	--[a]	<0.2	--[a]	
Vanadium	<0.2	<0.2	1	0.99	99	0.99	99	0
Beryllium	<0.2	<0.2	1	1.05	105	1.06	106	0.95
Copper	<0.2	<0.2	1	0.96	96	0.96	96	0
Silver	<0.2	<0.2	2	1.45	72	1.54	77	6.7
Mercury	<0.0003	[b]	0.003	0.00282	94	0.00285	95	1.1

[a]Matrix spikes for barium were not recovered.
[b]No duplicate analysis was performed for mercury.

T6-8.4J
5/28/92

TABLE 6-8. JACADS Process Samples QC Table
Scrubber Brine
Matrix Spike/Matrix Spike Duplicate for DFS

Element	Digestion blank, conc., µg/mL	Sample conc., µg/mL	Sample Duplicate Conc., µg/mL	Spike added, µg/mL	Matrix spike Conc., µg/mL	Matrix spike % Recovery	Matrix spike duplicate Conc., µg/mL	Matrix spike duplicate % Recovery	Relative % Difference
Arsenic	<0.1	0.64	0.81	4	3.59	74	3.70	77	4.0
Selenium	<0.1	<0.1	<0.1	1	0.84	84	0.77	77	8.7
Chromium	<0.1	3.34	3.45	4	5.72	60	5.96	66	9.5
Cadmium	<0.1	9.12	9.26	1	9.86	74	10.0	88	17.3
Lead	<0.1	427	683	4		[a]		[a]	
Nickel	<0.1	0.90	0.97	2	2.10	60	2.32	71	16.8
Tin	<0.1	0.67	0.78	2	2.18	76	1.79	56	30.3
Thallium	<0.2	0.35	0.58	20	18.0	88	19.9	98	10.8
Antimony	<0.1	0.69	0.98	2	2.56	94	2.71	101	7.2
Zinc	<0.1	58.5	122	2		[a]		[a]	
Cobalt	<0.1	<0.1	<0.1	2	1.42	71	1.53	77	8.1
Barium	<0.2	<0.2	0.46	20	1.63	8.2	0.43	2.2	115
Vanadium	<0.1	0.10	0.10	2	1.62	76	2.13	102	29.2
Beryllium	<0.05	<0.05	<0.05	2	1.98	99	1.96	98	1.0
Copper	<0.1	6.49	5.82	2	4.75	--[b]	9.60	156	
Silver	<0.1	<0.1	<0.1	4	0.97	24	0.18	4.5	73.1
Mercury	<0.0003	<0.0003	[c]	0.003	0.00293	98	0.00302	101	3.0

[a]Sample concentration was too high for meaningful spike analysis.
[b]The copper spike for this sample was not recovered.
[c]No duplicate sample analysis was performed for mercury.

T6-9.4J
5/28/92

TABLE 6-9. JACADS Process Samples QC Table
Process Water
Matrix Spike/Matrix Spike Duplicate for DFS

Element	Digestion blank, conc., µg/mL	Sample conc., µg/mL	Sample Duplicate Conc., µg/mL	Spike added, µg/mL	Matrix spike		Matrix spike duplicate		Relative % Difference
					Conc., µg/mL	% Recovery	Conc., µg/mL	% Recovery	
Arsenic	<0.1	<0.1	<0.1	4	4.26	107	4.10	103	3.8
Selenium	<0.1	<0.1	<0.1	1	1.05	105	1.04	104	0.96
Chromium	<0.1	<0.1	<0.1	4	4.06	102	3.87	97	5.0
Cadmium	<0.1	<0.1	<0.1	1	0.99	99	1.00	100	1.0
Lead	<0.1	<0.1	<0.1	4	4.07	102	4.11	103	0.98
Nickel	<0.1	<0.1	<0.1	2	1.92	96	1.96	98	2.1
Tin	<0.1	<0.1	<0.1	2	2.01	101	2.02	101	0
Thallium	<0.2	<0.2	<0.2	20	23.3	117	22.5	113	3.5
Antimony	<0.1	<0.1	<0.1	2	2.04	102	1.80	90	12.5
Zinc	<0.1	<0.1	<0.1	2	2.25	113	2.13	107	5.4
Cobalt	<0.1	<0.1	<0.1	2	2.17	109	2.10	105	3.7
Barium	<0.2	<0.2	<0.2	20	22.9	115	22.3	112	2.6
Vanadium	<0.1	<0.1	<0.1	2	2.18	109	2.13	107	1.8
Beryllium	<0.05	<0.05	<0.05	2	2.17	109	1.98	99	9.6
Copper	<0.1	<0.1	<0.1	2	2.18	109	2.10	105	3.7
Silver	<0.1	<0.1	<0.1	4	1.49	37	1 45	36	2.7
Mercury	<0.0003	<0.0003	[a]	0.003	0.00286	94	0.00288	96	2.1

[a]No duplicate analysis was performed for mercury.

T6-10.4J
5/28/92

TABLE 6-10. JACADS Process Samples QC Table
Scrubber Liquor
Matrix Spike/Matrix Spike Duplicate for DFS

Element	Digestion blank, conc., µg/mL	Sample conc., µg/mL	Sample Duplicate Conc., µg/mL	Spike added, µg/mL	Matrix spike Conc., µg/mL	Matrix spike % Recovery	Matrix spike duplicate Conc., µg/mL	Matrix spike duplicate % Recovery	Relative % Difference
Arsenic	<0.1	<0.1	<0.1	4	4.33	108	3.62	91	17.1
Selenium	<0.1	<0.1	<0.1	1	1.09	109	0.88	88	21.3
Chromium	<0.1	2.09	1.75	4	5.92	96	5.20	78	20.7
Cadmium	<0.1	<0.1	<0.1	1	1.02	102	0.89	89	13.6
Lead	<0.1	0.67	0.66	4	3.94	82	3.91	81	1.2
Nickel	<0.1	<0.1	<0.1	2	2.00	100	1.87	94	6.2
Tin	<0.1	<0.1	<0.1	2	0.29	15	0.50	25	50.0
Thallium	<0.2	<0.2	<0.2	40	38.9	97	32.9	82	16.8
Antimony	<0.1	<0.1	<0.1	2	0.98	49	1.38	69	33.9
Zinc	<0.1	0.56	0.51	2	2.72	108	2.33	89	19.3
Cobalt	<0.1	<0.1	<0.1	2	1.98	99	1.92	96	3.1
Barium	<0.2	<0.2	<0.2	20	5.82	29	14.0	70	82.8
Vanadium	<0.1	<0.1	<0.1	2	1.89	95	1.99	100	5.1
Beryllium	<0.05	<0.05	<0.05	2	1.89	95	1.91	96	1.0
Copper	<0.1	0.10	0.10	2	2.03	97	2.03	97	0
Silver	0.11	0.12	0.11	4	3.46	84	3.39	82	2.4
Mercury	<0.0003	<0.0003	[a]	0.003	0.00297	99	0.00297	98	1.0

[a]No duplicate sample analysis was performed for mercury.

T6-11.4J
5/28/92

TABLE 6-11. JACADS Process Samples QC Table
Caustic
Matrix Spike/Matrix spike Duplicate for DFS

Element	Digestion blank, conc., µg/mL	Sample conc., µg/mL	Sample Duplicate Conc., µg/mL	Spike added, µg/mL	Matrix spike Conc., µg/mL	Matrix spike % Recovery	Matrix spike duplicate Conc., µg/mL	Matrix spike duplicate % Recovery	Relative % Difference
Arsenic	<0.1	<0.1	<0.1	4	3.65	91	5.06	127	33.0
Selenium	<0.1	<0.1	<0.1	1	0.95	95	1.22	122	24.9
Chromium	<0.1	1.06	<0.1	4	2.93	47	4.50	86	58.6
Cadmium	<0.1	<0.1	<0.1	1	0.40	40	1.11	111	94.0
Lead	<0.1	0.16	0.12	4	3.30	79	4.95	120	41.2
Nickel	<0.1	<0.1	<0.1	2	1.59	80	1.96	98	20.2
Tin	<0.1	<0.1	<0.1	2	1.84	92	2.35	118	24.8
Thallium	<0.1	<0.2	<0.2	40	29.1	73	44.6	112	42.2
Antimony	<0.1	<0.1	<0.1	2	1.31	66	0.42	21	103
Zinc	<0.1	0.67	0.83	2	1.46	40	3.65	149	115
Cobalt	<0.1	<0.1	<0.1	2	1.59	80	2.04	102	24.2
Barium	<0.2	<0.2	<0.2	40	32.5	81	40.1	100	21.0
Vanadium	<0.1	<0.1	<0.1	2	1.59	80	2.18	109	30.7
Beryllium	<0.05	<0.05	<0.05	2	1.73	87	1.38	69	23.1
Copper	<0.2	0.12	0.15	2	2.36	112	3.21	155	32.2
Silver	0.16	0.15	0.16	4	0.32	4.3	0.43	7.0	47.8
Mercury	<0.0003	<0.0003	[a]	0.003	0.00278	93	0.00287	96	3.2

[a]No duplicate analysis for mercury was performed.

T6-12.4J
5/28/92

TABLE 6-12. JACADS DFS
MMT METALS ANALYSIS QC
FRONT HALF

Element	Method blank, µg/mL	Spike added µg/mL	Matrix spike conc, µg/mL	Matrix spike % Recovery	Matrix spike duplicate conc, µg/mL	Matrix spike duplicate % Recovery	Relative % Difference
Arsenic	<0.05	0.40	0.418	104	0.395	99	4.9
Selenium	<0.05	0.40	0.405	101	0.383	96	5.1
Chromium	<0.01	0.40	0.385	96	0.390	98	2.1
Cadmium	<0.01	0.40	0.395	99	0.420	105	5.9
Lead	0.092	0.40	0.275	69	0.314	79	13.5
Barium	<0.100	0.40	0.420	105	0.431	108	2.8
Beryllium	<0.005	0.40	0.417	104	0.416	104	0
Silver	<0.02	0.40	<0.02	--[a]	<0.02	--[a]	--[a]
Tin	<0.05	0.40	0.265	66	0.270	68	3.0
Antimony	<0.05	0.40	0.333	83	0.323	81	2.4
Phosphorus	0.104	0.40	1.025	230	1.153	262	13.0
Zinc	<0.05	0.40	0.304	76	0.314	79	3.8
Cobalt	<0.010	0.40	0.312	78	0.314	79	1.3
Nickel	<0.03	0.40	0.315	79	0.310	78	1.3
Boron	<0.05	0.40	0.405	101	0.407	102	0.98
Manganese	<0.005	0.40	0.309	77	0.316	79	2.6
Vanadium	<0.05	0.40	0.298	74	0.299	75	1.3
Copper	<0.05	0.40	0.315	79	0.312	78	1.3
Thallium	<0.005	0.04	0.038	95	0.035	88	7.6
Mercury	<0.0003	0.003	0.00305	102	0.00303	101	0.98

[a]There was no recovery of silver spikes.

T6-13.4J
5/28/92

TABLE 6-13. JACADS DFS
MMT METALS ANALYSIS QC
BACK HALF

Element	Method blank, µg/mL	Spike added µg/mL	Matrix spike conc, µg/mL	Matrix spike % Recovery	Matrix spike duplicate conc, µg/mL	Matrix spike duplicate % Recovery	Relative % Difference
Arsenic	<0.05	0.40	0.351	88	0.323	81	8.3
Selenium	<0.05	0.40	0.355	89	0.350	88	1.1
Chromium	<0.01	0.40	0.372	93	0.376	94	1.1
Cadmium	<0.01	0.40	0.385	96	0.385	96	0
Lead	<0.05	0.40	0.525	131	0.523	131	0
Barium	<0.10	0.40	0.412	103	0.403	101	2.0
Beryllium	<0.005	0.40	0.389	97	0.392	98	1.0
Silver	<0.02	0.40	0.432	108	0.085	21	135
Tin	<0.05	0.40	0.388	97	0.770	193	66.2
Antimony	<0.05	0.40	0.382	96	0.365	91	5.3
Phosphorus	0.100	0.40	1.01	252	1.13	282	11.2
Zinc	0.135	0.40	0.400	66	0.492	89	29.7
Cobalt	0.097	0.40	0.402	76	0.392	74	2.7
Nickel	<0.03	0.40	0.376	94	0.384	96	2.1
Boron	<0.05	0.40	0.497	124	<0.05	--[a]	--[a]
Manganese	<0.005	0.40	0.383	96	0.380	95	1.0
Vanadium	<0.05	0.40	0.404	101	0.402	101	0
Copper	<0.05	0.40	0.394	99	0.397	99	0
Thallium	<0.005	0.04	0.030	75	0.029	72	4.0
Mercury	<0.0003	0.003	0.00292	97	0.00295	98	1.0

[a]Boron was not recovered from the matrix spike duplicate sample.

TABLE 6-14. TCLP QC Table
HDC Ash Composite
DFS Test Run #1

Element	Blank, conc., µg/mL	Sample conc., µg/mL	Sample Duplicate Conc., µg/mL	Spike added, µg/mL	Matrix spike Conc., µg/mL	Matrix spike % Recovery	Matrix spike duplicate Conc., µg/mL	Matrix spike duplicate % Recovery	Relative % Difference
Arsenic	<0.1	<0.1	<0.1	4	3.94	99	4.38	110	10.5
Selenium	<0.1	<0.1	<0.1	1	1.02	102	1.13	113	10.2
Chromium	<0.1	0.11	0.12	4	3.77	94	3.88	97	3.1
Cadmium	<0.1	1.85	1.92	1	3.00	115	3.06	121	5.1
Lead	<0.1	0.54	0.55	4	4.62	102	4.85	108	5.7
Nickel	<0.1	<0.1	<0.1	2	2.07	104	2.13	107	2.8
Tin	<0.1	<0.1	0.10	2	1.28	65	2.27	114	54.8
Thallium	0.53	0.92	0.87	20	19.0	95	21.6	108	12.8
Antimony	<0.1	0.13	<0.1	2	1.52	76	2.01	101	28.2
Zinc	<0.1	28.27	27.1	2	[a]		[a]		
Cobalt	<0.1	<0.1	<0.1	2	2.03	102	2.13	107	4.8
Barium	0.46	2.48	2.56	20	24.4	110	24.9	112	1.8
Vanadium	<0.1	<0.1	<0.1	2	2.10	105	2.14	107	1.9
Beryllium	<0.05	<0.05	<0.05	2	2.06	103	2.06	103	0
Copper	<0.2	<0.1	<0.1	2	2.07	104	2.03	102	1.9
Silver	0.12	0.11	0.12	4	1.99	49	1.08	27	57.9
Mercury	<0.0005	<0.0005	[b]	0.003	0.00292	97	0.00295	98	1.0

[a]Sample concentrations were too high for meaningful spike analysis.
[b]No duplicate analysis was performed for mercury.

scrubber liquor, brine and caustic samples produce poorer, more erratic recoveries which are indicative of problems from such sample matrices.

Low levels of chloride in samples cause insoluble AgCl to form. Samples that contain chloride at low levels will cause poor recoveries of Ag. Samples which contain high levels of sulfate will cause insoluble $BaSO_4$ to form resulting in poor recoveries for barium.

6.5 Anion Analysis

The HCl field spikes are given in Table 6-15. Recoveries were variable. The results indicate that the method can detect the high spikes adequately with good accuracy. The matrix spike and duplicate results for the process samples are given in Tables 6-16 through 6-20 except for fuel oil and caustic. The recoveries were above 70%. One caustic spike was less than 60% and Fl^- and Cl^- in fuel oil were less than 50%.

6.6 Energetics

The STEM train was spiked with 25.2 μg of dinitrocresol before sampling. Recoveries are given in the data in Section Five and varied from 28-70%. This indicates that some losses of the surrogate occurred during sampling and extraction. These samples typically had migration of the surrogate through the 1st three segments of the XAD-2 cartridge. The migration may have led to the apparent low recovery. As samples were recovered the XAD-2 was wrapped in foil and stored at 4°C.

Table 6-21 indicates the matrix spike and duplicate results for STEM extract spikes performed after shipment to SRI. Recoveries of nitroglycerin, 2,4-dinitrotoluene, 2,6-dinitrotoluene, trinitrotoluene and RDX ranged from 77% to 144%. Dinitrocresol ranged from 51% to 97% (one outlier recovery of 6.4%) and HMX ranged from 47 to 70%.

6.7 QA/QC Summary

The results of the QA/QC samples indicate that sample collection and analysis were performed in adherence to method criteria. The results included 100% ± 30% recovery of most surrogate compounds and matrix spikes, RSD ≤ 30% of most replicate analyses, analysis of standards that gave calibration curves with correlation coefficients ≥ 0.99, the analysis of appropriate blanks and meeting the tuning criteria for GC/MS analysis. Spike recoveries were adequate in most cases and where recoveries were outside of the expected criteria explanation for the deviation is provided.

A continuous emission monitor audit was conducted during to the trial burn.

The metals blanks contained several low levels target metals. The slight contamination is probably from the acids used to prepare the samples. The metals results do, however, indicate compliance with proposed limits even if results were not corrected for corresponding blanks.

TABLE 6-15. CHLORIDE SPIKE RESULTS

Sample ID	Sample No.	Chloride Concentration, µg/mL		
		Amount found	Amount spiked	% Recovery
0.1N NaOH				
Blank	4J-6-138	ND[a]		
Low spike	4J-6-139	2.24	2.50	89.2
Medium spike	4J-6-140	18.5	25.0	74
High spike	4J-6-141	243	250	97.2
H_2O				
Blank	4J-6-137	0.158		
Low spike	4J-6-134	2.12	2.50	84.8
Medium spike	4J-6-135	19.6	25.0	78.4
High spike	4J-6-136	241	250	96.4

[a]ND = Not detected.

TABLE 6-16. PROCESS WATER
MATRIX SPIKE/MATRIX SPIKE DUPLICATE RECOVERY
(ANION Analysis)
Test Run 1

Sample ID: 4J-2-27
4J-2-27MS Process Water
4J-2-27MSD

Compound	Spike added (µg/mL)	Sample concn., (µg/mL)	Matrix Spike Concn., (µg/mL)	Matrix Spike Recovery %	Matrix Spike Duplicate Concn., (µg/mL)	Matrix Spike Duplicate Recovery %	RPD
Flouride	5	ND	4.01	80.1	4.04	80.8	0.870
Chloride	5	18.2	23.8	111	23.4	104	6.69
Phosphate	75	ND	67.9	90.5	68.6	91.5	1.10

ND - Not detected (detection limit - Fl^- 0.08 µg/mL, Cl^- 0.08 µg/mL, PO_4^{-3} 1.2 µg/mL)

TABLE 6-17. SCRUBBER LIQUOR
MATRIX SPIKE/MATRIX SPIKE DUPLICATE RECOVERY
(ANION Analysis)
Test Run 1

Sample ID: 4J-2-5
4J-2-5MS Scrubber Liquor
4J-2-5MSD

Compound	Spike added (μg/mL)	Sample concn., (μg/mL)	Matrix Spike Concn., (μg/mL)	Matrix Spike Recovery %	Matrix Spike Duplicate Concn., (μg/mL)	Matrix Spike Duplicate Recovery %	RPD
Flouride	5	ND	4.789	95.8	4.8	96	0.2
Chloride	5	6.8	12.1	106.1	12.2	107.1	0.94
Phosphate	75	4.0	70.9	89.16	71.1	89.4	0.27

ND = Not detected (detection limit - Fl^- 0.08 μg/mL, Cl^- 0.08 μg/mL, PO_4^{-3} 1.2 μg/mL)

TABLE 6-18. SCRUBBER BRINE
MATRIX SPIKE/MATRIX SPIKE DUPLICATE RECOVERY
(ANION Analysis)
Test Run 2

Sample ID: 4J-3-45
4J-3-45MS Brine
4J-3-45MSD

Compound	Spike added (μg/mL)	Sample concn., (μg/mL)	Matrix Spike Concn., (μg/mL)	Matrix Spike Recovery %	Matrix Spike Duplicate Concn., (μg/mL)	Matrix Spike Duplicate Recovery %	RPD
Flouride	5	ND	3.9	78	3.7	74.0	5.3
Chloride	5	17.8	23.6	116	22.7	98.4	16.7
Phosphate	75	7.9	69.5	92.6	69.7	92.9	0.320

ND = Not detected (detection limit - Fl^- 0.08 μg/mL, Cl^- 0.08 μg/mL, PO_4^{-3} 1.2 μg/mL)

TABLE 6-19. FUEL OIL
MATRIX SPIKE/MATRIX SPIKE DUPLICATE RECOVERY
(ANION Analysis)
Test Run 2

Sample ID: 5J-2-28
5J-2-28MS Fuel Oil
5J-2-28MSD

Compound	Spike added (μg/mL)	Sample concn., (μg/mL)	Matrix Spike Concn., (μg/mL)	Matrix Spike Recovery %	Matrix Spike Duplicate Concn., (μg/mL)	Matrix Spike Duplicate Recovery %	RPD
Flouride	5	ND	2.08	41.6	2.12	42.4	1.90
Chloride	5	ND	2.11	42.2	2.15	43.0	1.89
Phosphate	75	ND	57.3	76.4	58.1	77.5	1.43

ND = Not detected (detection limit - Fl^- 0.08 μg/mL, Cl^- 0.08 μg/mL, PO_4^{-3} 1.2 μg/mL)

TABLE 6-20. CAUSTIC
MATRIX SPIKE/MATRIX SPIKE DUPLICATE RECOVERY
(ANION Analysis)
Test Run 4

Sample ID: 4J-6-21
4J-6-21MS Caustic
4J-6-21MSD

Compound	Spike added (µg/mL)	Sample concn., (µg/mL)	Matrix Spike Concn., (µg/mL)	Matrix Spike Recovery %	Matrix Spike Duplicate Concn., (µg/mL)	Matrix Spike Duplicate Recovery %	RPD
Flouride	5	3.88	8.22	86.9	8.45	91.4	5.05
Chloride	5	13.4	17.3	78.6	16.4	60.2	26.5
Phosphate	75	ND	68.3	91.1	70.3	93.7	2.81

ND - Not detected (detection limit - Fl^- 0.08 µg/mL, Cl^- 0.08 µg/mL, PO_4^{-3} 1.2 µg/mL)

TABLE 6-21. LABORATORY SPIKING OF STEM EXTRACTS, MS AND MSD
ENERGETICS MS/MSD RESULTS

	NITROGLYCERIN AMT,UG			2,4-DINITROTOLUENE AMT,UG			2,6-DINITROTOLUENE AMT,UG			DINITROCRESOL AMT,UG			TRINITROTOLUENE AMT, UG			RDX AMOUNT, UG			HMX AMOUNT, UG		
	ADDED	FOUND	REC	ADDED	FOUND	REC	ADDED	FOUND	REC	ADDED	FOUND	REC	ADDED	FOUND	REC	ADDED	FOUND	REC	ADDED	FOUND	REC
Test Run 4																					
4J-8E-24MSD	2	1.8	90	2.56	3.7	144	2.5	2.51	100	3.4	3.3	97	3.38	3.63	107	3.18	2.98	94	2.06	1.41	53
4J-8E-24MS	2	1.62	81	2.56	3.46	135	2.5	2.38	95	3.4	3.18	93	3.38	3.37	100	3.18	3	94	2.06	1.73	64
4J-8E-8MS	2	1.73	87	2.56	3.1	121	2.5	2.38	95	3.4	2.94	86	3.38	3.2	92	3.18	2.94	92	2.06	1.44	54
4J-8E-8MSD	2	1.89	95	2.56	3.18	125	2.5	2.62	105	3.4	3.38	99	3.38	3.32	98	3.18	3.11	98	2.06	1.86	68
Test Run 3																					
4J-4E-18MS	2	1.72	86	2.56	3.64	142	2.5	2.42	97	3.4	3.12	92	3.38	3.44	102	3.18	2.88	91	2.06	1.38	51
4J-4E-18MSD	2	1.81	91	2.56	3.7	144	2.5	2.54	102	3.4	2.7	79	3.38	3.62	107	3.18	3.23	102	2.06	1.68	79
4J-4E-45MS	2	2.47	124	2.56	3.81	141	2.5	2.3	92	3.4	2.57	75	3.38	3.34	98	3.18	2.92	92	2.06	1.37	51
4J-4E-45MSD	2	2.15	108	2.56	3.18	124	2.5	2.02	81	3.4	2.22	65	3.38	2.89	86	3.18	2.68	84	2.06	1.37	51
Test Run 1																					
4J-2E-48MS	2	1.87	94	2.56	3.5	137	2.5	2.27	91	3.4	0.218	6.4	3.38	3.4	101	3.18	2.84	89	2.06	1.3	48
4J-2E-48MSD	2	1.53	77	2.56	2.88	116	2.5	1.94	78	3.4	1.75	51	3.38	2.81	86	3.18	2.48	78	2.06	1.27	47
Test Run 2																					
4J-3E-33MSD	2	2.25	113	2.56	3.36	131	2.5	2.16	86	3.4	2.1	62	3.38	3.09	91	3.18	2.76	87	2.06	1.34	50
4J-3E-33MS	2	2.1	105	2.56	3.4	133	2.5	2.28	82	3.4	2.84	84	3.38	3.23	96	3.18	2.86	89	2.06	1.62	60

Background Docuemnt H, Reference 11

Tooele Chemical Agent Disposal Facility, 1997, Waste Analysis Plan, Version 3, TOCDF WAT02 0117, April.

See Preamble, Reference 23

RCRA TRIAL BURN REPORT FOR

HD - MUSTARD TON CONTAINERS - METAL PARTS FURNACE

AT THE JOHNSTON ATOLL CHEMICAL AGENT DISPOSAL SYSTEM

B089

Prepared by
United Engineers & Constructors

Prepared for the
Program Manager for Chemical Demilitarization
Environmental and Monitoring Division

December 16, 1992

TABLE OF CONTENTS

		Page
	EXECUTIVE SUMMARY	ES-1
1.0	INTRODUCTION	1-1
	1.1 Purpose of the Test Program	1-1
	1.2 Scope of This Report	1-2
2.0	SUMMARY OF DATA	2-1
	2.1 Steady State Operating Conditions	2-1
	2.2 Destruction of Chemical Agent	2-1
	2.3 Particulate Emissions	2-3
	2.4 HCl Emissions	2-3
	2.5 Carbon Monoxide	2-3
	2.6 Metals	2-3
	2.6.1 Analysis of Liquid Process Samples for Metals	2-3
	2.6.2 Stack Emissions of Metals	2-6
	2.6.3 Composite Ash Samples	2-6
	2.7 Products of Incomplete Combustion	2-6
	2.8 Dioxin/Furan Emissions	2-6
	2.9 Anions in Process Samples	2-13
	2.10 Total Hydrocarbons	2-13
	2.11 Quality Assurance/Quality Control	2-13
3.0	FACILITY DESCRIPTION	3-1
	3.1 The JACADS Facility	3-1
	3.2 MPF Description	3-4
	3.3 Agent for the RCRA Trial Burn	3-7
	3.4 Sampling Locations	3-8
	3.5 Facility Instrumentation	3-8
4.0	TEST PROCEDURES	4-1
	4.1 Preparation for Testing	4-1
	4.2 Continuous Collection Methods	4-1
	4.2.1 Continuous Emission Monitors (CEMs)	4-1
	4.2.2 Chemical Agent Monitors	4-1

TABLE OF CONTENTS (cont'd)

		Page
4.3	Manual Sample Collection Methods	4-2
4.3.1	Modified Method Five (MM5)	4-2
4.3.2	Volatile Organic Sampling Train (VOST)	4-2
4.3.3	Method Five Acid Train (M5AT)	4-2
4.3.4	Multiple Metals Train (MMT)	4-2
4.3.5	Particle Size Distribution	4-3
4.3.6	Orsat	4-3
4.3.7	Support Methods	4-3
4.3.8	Total Hydrocarbons	4-3
4.4	Sample Collection Sequence and Procedure	4-3
4.4.1	Trial Burn Sequence	4-3
4.4.2	Sample Collection Procedure	4-5
4.4.3	Sampling Contingency Plan	4-6
4.5	Analysis	4-6
4.6	Analysis Summaries	4-7
4.6.1	Semivolatile Organics Analysis	4-7
4.6.1.1	Extractions	4-7
4.6.1.2	Analytical Procedures for Determining Semivolatile Organics	4-8
4.6.1.2.1	Polychlorinated Debenzo-p-dioxins and Polychlorinated Dibenzofurans	4-8
4.6.1.2.2	Base-Neutral-Acid Analysis	4-9
4.6.2	Volatile Organics Analysis	4-9
4.6.2.1	VOST Analysis	4-9
4.6.3	Anions Analysis	4-10
4.6.4	Metals Analysis	4-11
4.6.5	pH Measurements	4-11
4.6.6	Particulates	4-11
5.0	TEST RESULTS	5-1
5.1	Introduction	5-1
5.2	Process Data	5-1
5.2.1	Process Data Acquisition and Recording	5-1
5.2.2	Orsat	5-1
5.2.3	Chemical Agent Feed Rate	5-1

TABLE OF CONTENTS (cont'd)

		Page
5.3	Results from the Determination of Semivolatile Organics	5-9
	5.3.1 General	5-9
	5.3.2 Results	5-9
	5.3.3 Sample Calculations	5-23
	5.3.3.1 Aqueous Process Samples (Benzoic Acid in Brine)	5-23
	5.3.3.2 MM5 Trains (For Benzyl Alcohol)	5-23
5.4	Dioxins and Furans (PCDD/F)	5-23
	5.4.1 Results	5-23
	5.4.2 Example Calculation	5-28
5.5	Volatile Organics Analyses	5-37
	5.5.1 Results	5-37
	5.5.2 Sample Calculations	5-49
	5.5.2.1 Aqueous Process Samples (Run 3 Process Water Pre Test for 2-butanone)	5-49
	5.5.2.2 VOST Tubes (Run 2 Pair 1 Tenax for Benzene)	5-49
5.6	Anions Analysis	5-49
	5.6.1 Anions in Stack Gas	5-49
	5.6.1.1 Method Five Acid Train (M5AT)	5-49
	5.6.1.2 Anions in Liquid Process Samples	5-55
5.7	Metals Analysis	5-55
5.8	Reactivity and pH Analysis	5-71
5.9	Particulate Measurements	5-73
	5.9.1 Mass Flow	5-73
	5.9.2 Particle Size Distribution	5-73
5.10	Chemical Agent - POHC	5-77
	5.10.1 Results	5-77
	5.10.2 Destruction and Removal Efficiency	5-77
5.11	Total Hydrocarbons	5-83

TABLE OF CONTENTS (cont'd)

		Page
6.0	QUALITY ASSURANCE AND QUALITY CONTROL	6-1
6.1	Background	6-1
6.2	Semi-Volatile Organic Analysis	6-2
6.3	Volatile Organic Analysis	6-4
6.4	Metals Analysis	6-7
6.5	HCl Analysis	6-23
6.6	Dioxin	6-23
6.7	QA/QC Summary	6-36

ATTACHMENTS

1 Memorandum of Understanding

APPENDICES

A Chain of Custody and Log Sheets

B Operator's Log

C Process Data

D Sampling Data

E Continuous Emission Montior Data

F METCO Environmental Source Emissions Survey

G Test Plan and Contract Modifications

H Dioxin

I GC/MS Volatiles

J GC/MS Semivolatiles

K Filter Weights Acetone Residue

L Anion Analyses

M Metal Analysis

N TCLP

O Field Notebook H-129

FIGURE LIST

Figure No.	Title	Page
3-1	Location of Johnston Island	3-2
3-2	Johnston Island	3-3
3-3	Schematic Diagram of the Metal Parts Furnace	3-5
3-4	Schematic Diagram of the MPF Pollution Abatement System (PAS)	3-6
3-5	MPF, DFS, and LIC Stack Sample Point Locations	3-10
5-1	MPF Test Run #4, Rolling Hourly CO Conc. vs. Time	5-4
5-2	MPF Test Run #4, Oxygen in Afterburner Exhaust vs. Time	5-5
5-3	MPF Test Run #4, Zone 2 Temperature vs. Time	5-6
5-4	MPF Test Run #4, Afterburner Temperature vs. Time	5-7
5-5	Differential Mass Size Distribution for MPF HD Test Runs 1 Through 4	5-75
5-6	Particle Size Distribution on Cumulative Percent by Mass Smaller than Size for MPF HD Test Runs 1-4	5-76
5-7	Calculated Feed Rate for MPF Test #1	5-78
5-8	Calculated Feed Rates for MPF Run #2, #3	5-79
5-9	Calculated Feed Rate for MPF Test #4	5-80

TABLE LIST

Table No.	Title	Page
2-1	Summary of System Test Conditions and Results	2-2
2-2	Metals in Process Samples and Fuel Oil	2-4
2-3	System Performance for Metals	2-7
2-4	Metals in MPF Ash	2-8
2-5	MPF System Performance for Semivolatile Products of Incomplete Combustion	2-9
2-6	MPF System Performance for Volatile Products of Incomplete Combustion	2-10
2-7	MPF System Performance for PCDD/PCDF	2-11
2-8	Summary of Target PCDDs/PCDFs Detected in MM5 Trains from MPF	2-12
2-9	Anions in MPF Process Liquid Samples	2-14
2-10	Detection Limits for Anions in Process Liquids	2-15
2-11	MPF Total Hydrocarbons in Stack Gas	2-16
3-1	MPF Sampling Locations	3-9
3-2	Location of Sampling Points for Method 5 Acid Train, Multiple Metals Train, and Particulates	3-11
3-3	Location of Sampling Points for MM5 Train and Particle Sizing	3-12
3-4	Facilities Emissions Monitoring Instrumentation	3-13
5-1	MPF PDAR Data	5-2
5-2	MPF Process Data from Manual Stack Sampling	5-3
5-3	MPF Integrated Orsat Stack Data	5-8
5-4	MPF Agent HD Feed Rate	5-10
5-5	Modified Method 5 Train Conditions and Results	5-11
5-6	MPF System Performance for Semivolatile Products of Incomplete Combustion	5-12
5-7	Semivolatile Results Summary for MM5 Train	5-13

TABLE LIST (cont'd)

Table No.	Title	Page
5-8	Semivolatile Tentatively Identified Compound Results for MM5 Train	5-14
5-9	MPF Process Samples, Semivolatile Results Summary, Test Run 1	5-19
5-10	MPF Process Samples, Semivolatile Results Summary, Test Run 2	5-20
5-11	MPF Process Samples, Semivolatile Results Summary, Test Run 3	5-21
5-12	MPF Process Samples, Semivolatile Results Summary, Test Run 4	5-22
5-13	MPF System Performance for PCDD/PCDF	5-24
5-14	Determination of Total PCDDs/PCDFs in MM5 Trains from MPF	5-25
5-15	Determination of Target PCDDs/PCDFs in MM5 Trains from MPF	5-26
5-16	Determination of Total PCDDs/PCDFs in Process Water Samples from MPF	5-29
5-17	Determination of Total PCDDs/PCDFs in Scrubber Liquor Samples from MPF	5-30
5-18	Determination of Total PCDDs/PCDFs in Brine Samples from MPF	5-31
5-19	Determination of Total PCDDs/PCDFs in Caustic Samples from MPF	5-32
5-20	Determination of Total PCDDs/PCDFs in Fuel Samples from MPF	5-33
5-21	Determination of Target PCDDs/PCDFs in Ash Samples of Ton Container Residue	5-34
5-22	Determination of Total PCDDs/PCDFs in Ash Samples of Ton Container Residue	5-36
5-23	MPF System Performance for Volatile Products of Incomplete Combustion	5-38
5-24	VOST Volatile Organic Results Summary, Test Run 1	5-39

TABLE LIST (cont'd)

Table No.	Title	Page
5-25	VOST Volatile Organic Results Summary, Test Run 2	5-41
5-26	VOST Volatile Organic Results Summary, Test Run 3	5-43
5-27	VOST Volatile Organic Results Summary, Test Run 4	5-45
5-28	Aqueous Volatile Organics Summary	5-47
5-29	Method 5 Acid Train Conditions and Results	5-50
5-30	JACADS MPF Acid Train Results, Test Run 1	5-51
5-31	JACADS MPF Acid Train Results, Test Run 2	5-52
5-32	JACADS MPF Acid Train Results, Test Run 3	5-53
5-33	JACADS MPF Acid Train Results, Test Run 4	5-54
5-34	JACADS - Anion Results in MPF Process Samples, Test Run 1	5-56
5-35	JACADS - Anion Results in MPF Process Samples, Test Run 2	5-57
5-36	JACADS - Anion Results in MPF Process Samples, Test Run 3	5-58
5-37	JACADS - Anion Results in MPF Process Samples, Test Run 4	5-59
5-38	JACADS - Anion Results Detection Limits	5-60
5-39	Method 5 Multiple Metals Train Conditions and Results	5-61
5-40	System Performance for Metals	5-62
5-41	MPF Metals Train Results - Test Run 1	5-63
5-42	MPF Metals Train Results - Test Run 2	5-64
5-43	MPF Metals Train Results - Test Run 3	5-65
5-44	MPF Metals Train Results - Test Run 4	5-66
5-45	TCLP Metal Analysis Results - Test Run 1, MPF Process Samples	5-67

TABLE LIST (cont'd)

Table No.	Title	Page
5-46	TCLP Metal Analysis Results - Test Run 2, MPF Process Samples	5-68
5-47	TCLP Metal Analysis Results - Test Run 3, MPF Process Samples	5-69
5-48	TCLP Metal Analysis Results - Test Run 4, MPF Process Samples	5-70
5-49	Metals in Ton Container Residue/Ash	5-72
5-50	Reactivity and pH	5-74
5-51	MPF Agent Feed Rate and DRE	5-81
5-52	MPF Total Hydrocarbons in Stack Gas	5-84
6-1	Recoveries of 9J Resin Field Spikes	6-3
6-2	Semivolatile Results Summary, Blanks	6-5
6-3	MPF Semivolatile Quality Control Analyses	6-6
6-4	VOST Audit Results	6-8
6-5	VOA QC Analysis	6-9
6-6	VOA QC Analysis	6-10
6-7	VOA QC Analysis	6-11
6-8	VOA QC Analysis	6-12
6-9	VOA QC Analysis	6-13
6-10	MPF TCLP Metals QC Table, Scrubber Liquor Post Test, Test Run 2, Sample No. 9J-3-114	6-14
6-11	MPF TCLP Metals QC Table, Scrubber Brine Post Test, Test Run 2, Sample No. 9J-3-122	6-15
6-12	MPF TCLP Metals QC Table, Caustic Post Test, Test Run 2, Sample No. 9J-3-130	6-16
6-13	MPF TCLP Metals QC Table, Process Water Post Test, Test Run 2, Sample No. 9J-3-138	6-17
6-14	MPF TCLP Metals QC Table, Fuel Oil Post Test, Test Run 2, Sample No. 9J-3-142	6-18

TABLE LIST (cont'd)

Table No.	Title	Page
6-15	MPF MMT Metals Analysis QC, Front Half	6-19
6-16	MPF MMT Metals Analysis QC, Back Half	6-20
6-17	TCLP QC Table, MPF Ton Container Residue, Test Run 2, Sample No. 9J-3-144	6-21
6-18	MPF - Acid Train QC Results, 9J-1A-1- Water MD/MSD Results	6-24
6-19	MPF - Acid Train QC Results, 10J-5-9-NaOH MS/MSD Results	6-25
6-20	MPF - Acid Train QC Results, 9J-1A H_2SO_4 MS/MSD Results	6-26
6-21	MPF - Anion Results, 9J-3-142 Fuel Oil - Post Test QC Results	6-27
6-22	MPF - Anion Results, 9J-3-118 Brine - Post Test QC Results	6-28
6-23	MPF - Anion Results, J-3-114 Scrubber Liquor - Post Test QC Results	6-29
6-24	MPF - Anion Results, Caustic - Post Test QC Results	6-30
6-25	MPF - Anion Results, Process Water - Post Test QC Results	6-31
6-26	MPF - MPF Anion Results, Field QC Samples	6-32
6-27	Target PCDFs/PCDDs in MM5 Trains from MPF QC Analyses	6-33
6-28	Total PCDFs/PCDDs in MM5 Trains from MPF QC Analyses	6-35
6-29	Total PCDFs/PCDDs in Process Water Samples from MPF QC Analyses	6-37
6-30	Total PCDFs/PCDDs in Scrubber Liquor Samples from MPF QC Analyses	6-38
6-31	Total PCDFs/PCDDs in Brine Samples from MPF QC Analyses	6-39
6-32	Total PCDFs/PCDDs in Caustic Samples from MPF QC Analyses	6-40

TABLE LIST (cont'd)

Table No.	Title	Page
6-33	Total PCDFs/PCDDs in Fuel Samples from MPF QC Analyses	6-41
6-34	Determination of Target PCDFs/PCDDs in Ash Samples of Ton Container Residue	6-42
6-35	Determination of Total PCDFs/PCDDs in Ash Samples from MPF QC Analyses	6-44
6-36	VOST Audit Results	6-45

LIST OF ACRONYMS

ACAMS	-	Automatic Continuous Air Monitoring System
ASC	-	Allowable Stack Concentration.
CAMDS	-	Chemical Agent Munitions Disposal System
CEM	-	Continuous Emission Monitor
COC	-	Chain-of-Custody
DAAMS	-	Depot Area Air Monitoring System
DFS	-	Deactivation Furnace System
DRE	-	Destruction and Removal Efficiency
DUN	-	Dunnage Incinerator
EPA	-	Environmental Protection Agency
FPD	-	Flame Photometric Detector
GB	-	Nerve Agent
GC	-	Gas Chromatograph
GCMS	-	Gas Chromatograph Mass Spectrometry
GPD	-	Gas Plasma Display
HD	-	Mustard Agent
HRGC/HRMS	-	High Resolution Gas Chromatography/High Resolution Mass Spectrometry
HVAC	-	Heating, Ventilating and Air Conditioning
ICP	-	Inductively Coupled Plasma Atomic-Emission Spectrometry
in. w.c.	-	inches in water column
JACADS	-	Johnston Atoll Chemical Agent Disposal System
LIC	-	Liquid Incinerator System
LOQ	-	Limit of Quantification
M5AT	-	Method 5 Acid Train
MDB	-	Munitions Demilitarization Building
MM5	-	Modified Method 5
MMT	-	Multiple Metals Train

LIST OF ACRONYMS

MPF	-	Metal Parts Furnace
OVT	-	Operational Verification Test(ing)
PAS	-	Pollution Abatement System
PCDD/F	-	Polychlorinated dibenzo-p-dioxins and Polychlorinated dibenzo furans
PDAR	-	Process Data Acquisition and Recording
PICs	-	Products of Incomplete Combustion
PMCD	-	Program Manager for Chemical Demilitarization
POHC	-	Principal Organic Hazardous Constituent
QA	-	Quality Assurance
QC	-	Quality Control
RCRA	-	Resource Conservation and Recovery Act
RHA	-	Residue Handling Area
SDS	-	Spent Decontamination Solution
S/F	-	Shipping and Firing
SRI	-	Southern Research Institute
SwRI	-	Southwest Research Institute
TCDD/F	-	Tetrachlorodibenzodiozin/furan
TCLP	-	Toxicity Characteristic Leachate Procedure
TE	-	Toxicity Equivalent
THC	-	Total Hydrocarbons
TSCA	-	Toxic Substance Control Act
UE&C	-	United Engineers & Constructors Inc.
VOA	-	Volatile Organic Analysis
VOST	-	Volatile Organic Sampling Train
VX	-	Nerve Agent
XAD-2	-	A Resin Used in Sampling

RCRA TRIAL BURN REPORT FOR HD MUSTARD TON CONTAINERS - METAL PARTS FURNACE AT THE JOHNSTON ATOLL CHEMICAL AGENT DISPOSAL SYSTEM

EXECUTIVE SUMMARY

This report summarizes the results of the fourth in a series of trial burns being conducted at the Johnston Atoll Chemical Agent Disposal System (JACADS). Trial burns are required in order to demonstrate to the Environmental Protection Agency and the public that the JACADS incineration systems are capable of effectively destroying agent munitions while being protective of human health and the environment.

Under Congressional mandate, the Department of the Army must dispose of existing stocks of obsolete, unitary chemical-warfare agent munitions. JACADS is a full scale, fully integrated facility constructed to demonstrate this capability. JACADS consists of four incineration systems: (1) a Deactivation Furnace System (DFS) to incinerate explosives and propellants; (2) a Liquid Incinerator (LIC) to incinerate chemical agents, and spent decontamination solutions; (3) a Metal Parts Furnace (MPF) for thermally decontaminating projectiles, containers, and metal parts; and (4) a Dunnage Incinerator (DUN) to incinerate shipping pallets, packaging materials and other solid waste generated in the facility during treatment operations. Trial burns have been successfully completed in the LIC and DFS, and continued operations of both have compiled an impressive record for the safe and environmentally sound destruction of the chemical nerve agents GB and VX and M55 rockets.

In concert with the trial burns, an Operational Verification Test (OVT) program was mandated by Congress. The purpose of OVT is to demonstrate that the technology and performance of the JACADS plant are protective of human health and the environment prior to operation of the Chemical Stockpile Disposal Program in the continental United States.

The OVT program is composed of four sequential agent/munition campaigns that will prove the technology and performance of the JACADS plant. These campaigns are:

OVT-1 <u>M55 rockets with Agent GB</u>: This portion of the OVT has been successfully completed using the DFS and LIC furnace systems.

OVT-2 <u>M55 rockets with Agent VX:</u> This portion of the OVT has been successfully completed using the DFS and LIC furnace systems.

OVT-3 <u>Ton containers with Agent HD (mustard):</u> Sixty-eight of these containers have been processed in the MPF. This effort constituted the shakedown and trial burn in the MPF.

OVT-4 <u>105-mm projectiles containing Agent HD</u>: Up to 44,000 of these projectiles will be treated during the period immediately following completion of the MPF HD ton container trial burn.

As part of OVT, United Engineers & Constructors (UE&C) in concert with other subcontractors, coordinated and performed this trial burn from August 20 to August 26, 1992. The trial burn was conducted in the MPF while processing mustard Agent HD filled ton containers. Residual agent HD (1,1'thiobis[2-chloroethane]) left in the ton containers after draining was the primary MPF hazardous waste feed. As such, HD was considered the principal organic hazardous constituent (POHC) for the trial burn. The trial burn consisted of four sequential test runs lasting approximately four hours each, during which considerable sampling and analyses were performed. The purpose of the testing and analysis was to verify that the MPF could efficiently destroy HD while being protective of human health and the environment. This report summarizes the field activities, chemical analyses, and data analyses associated with these tests.

The specific objectives of this effort were to:

1. Demonstrate that the MPF could establish and maintain steady state operating conditions while processing HD filled ton containers.

2. Perform a Resource Conservation and Recovery Act (RCRA) trial burn incinerating residual HD in ton containers.

3. Demonstrate that the MPF is capable of achieving compliance with the following basic RCRA incineration performance standards:

   a) Verify by analysis that at least 99.99% of all HD fed to the MPF was destroyed - destruction and removal efficiency (DRE).

   b) Show by analysis and testing that the stack particulate emissions are maintained below 180 mg/dscm (0.08 grains per dry standard cubic foot corrected to 7% oxygen) when processing hazardous waste.

   c) Maintain hydrochloric acid (HCl) emissions in the stack gases below 4 lb/hr or achieve a 99% HCl removal efficiency whichever is greater.

4. Operate the MPF such that the one hour rolling average carbon monoxide concentration (corrected to 7% oxygen) in the stack gas is maintained below 100 ppm with no greater than 200 ppm spikes of less than 5 minutes duration.

5. Monitor MPF stack gas emissions for:
   - Agent HD
   - Oxygen (O_2)
   - Carbon Monoxide (CO)
   - Carbon Dioxide (CO_2)
   - Volatile and semi-volatile products of incomplete combustion (PIC's)
   - Polychlorinated dibenzo-p-dioxins and furans (PCDD/F)
   - Trace Metals
   - Total Hydrocarbons
   - Oxides of nitrogen(NO_x)
   - Sulfur dioxide(SO_2)

6. Sample and analyze incinerator liquid/solid process materials for:
   - Volatile and semi-volatile PIC's
   - PCDD/F's
   - Trace Metals
   - Chlorides, fluorides, phosphates and sulfates
   - Reactivity & pH

During each test run stack gases were sampled and analyzed to assess the system performance. In addition, process liquids and solids were sampled for analysis. Liquids, such as scrubber brines, and solids, such as ton container ash, were obtained for analysis to characterize overall MPF system performance.

Exhaust gas was sampled for both organic and inorganic PICs, such as volatile compounds, semi-volatile compounds, particulate matter, metals and hydrogen chloride (HCl). Solid and liquid wastes generated by the pollution abatement system (PAS) and ash residues from the ton containers were analyzed to identify any hazardous components that might be present.

The MPF operational parameters were monitored to ensure adherence to RCRA regulations, demonstrate compliance with performance criteria and to calculate energy and material balances.

During all four test runs, regardless of what the HD (POHC) loading on the MPF system was, the Automatic Continuous Air Monitoring System (ACAMS) for agent did not detect any agent concentration in the stack gas above the Limit of Quantification (LOQ). Thus the DRE was calculated using the LOQ value recognizing that the actual DRE would be significantly better than the calculated value. The average DRE for the trial burn was calculated to be greater than 99.999%, significantly greater than the minimum RCRA requirement of 99.99%. The CO concentration in the exhaust gas was continuously maintained below 20 ppm which is far below the permit requirement of maintaining an hourly rolling average of less than 100 ppm CO corrected to 7% oxygen. The particulate matter emission rate averaged 4.80 mg/dscm, with the highest emission being 13.4 mg/dscm. The highest particulate emission rate was less than 8% of the allowable rate of 180 mg/dscm. Only one of the four test runs generated HCl above the detection limit of the analytical monitoring procedure used. The HCl emission rate for that one run was 0.05 lb/hr, far below the allowed limit of 4 lb/hr.

The MPF stack gas emission was also monitored for O_2, CO_2, volatile and semivolatile organic compounds, dioxins and furans, trace metals, total hydrocarbons and particle size distribution.

The liquid and solid process samples were analyzed for volatile and semi-volatile organic compounds, dioxins and furans, trace metals, chlorides, fluorides, phosphates, sulfates, pH (where applicable) and reactivity.

The MPF system exhaust gases, liquid and solid process samples and process residues were analyzed during each of the four test runs at increasing loads on the furnace to assess performance. The MPF system demonstrated it was able to operate well within the defined RCRA permit parameters.

RESULTS OF THE RCRA TRIAL BURN OF THE
METAL PARTS FURNACE
AT THE JOHNSTON ATOLL CHEMICAL AGENT DISPOSAL SYSTEM

1.0 INTRODUCTION

1.1 PURPOSE OF THE TEST PROGRAM

Under Congressional mandate, the Department of the Army must dispose of existing stocks of chemical warfare agents and munitions. To implement this directive, the Army plans to construct eight munitions demilitarization facilities at existing munitions storage depots in the United States.

The first fully integrated demilitarization facility, the Johnston Atoll Chemical Agent Disposal System (JACADS), was constructed at Johnston Atoll in the Pacific Ocean. JACADS was constructed for the full-scale demilitarization and thermal decontamination of chemical munitions and storage containers which contain nerve agents (GB and VX) and mustard agent (HD). The JACADS facility consists of:

- the Liquid Incinerator System (LIC), used to burn the chemical agents
- the Deactivation Furnace System (DFS) for processing rockets and destroying energetic materials
- the Metal Parts Furnace (MPF) for thermally decontaminating drained storage containers, bombs and projectiles (explosive materials removed)
- the Dunnage Incinerator (DUN), for processing dunnage material, such as cardboard and wooden boxes, related to munition shipment

The Army has scheduled OVT at the JACADS facility. The completion of the OVT at Johnston Atoll is pivotal because, by Congressional Order, no chemical-agent disposal may be conducted at any depot except the Chemical Agent Munitions Disposal System (CAMDS) located at Tooele Army Depot in Tooele, Utah, until the completion of the performance evaluation at Johnston Atoll.

In partial fulfillment of the OVT requirements, one trial burn, consisting of four test runs, was performed in the MPF at JACADS beginning August 20, 1992 and ending August 26, 1992. Ton containers, used to store HD, were drained of their liquid HD contents and used as the feed material. This trial burn was conducted to demonstrate compliance with the RCRA during the thermal decontamination of metal parts in the MPF. This document is the report from the trial burn. This report was prepared by UE&C for the Program Manager for Chemical Demilitarization (PMCD). The sampling described here was carried out by Southern Research Institute (SRI) under subcontract to UE&C as a part of its prime contract (DACA87-86-C-0098) with PMCD.

Throughout these tests, the MPF was evaluated against RCRA-specified performance standards. These system-performance criteria pertained to the DRE of the POHC; the emission from the exhaust stack of particulate matter, carbon monoxide, and acid gas; the characteristics of the combustion residue; and the various parameters relating to furnace operation. The pertinent criteria may be summarized as follows:

- The DRE of residual chemical agent (POHC) must be 99.99% or greater.

- Particulate emissions from the exhaust stack must not exceed 180 mg/dscm (0.08 grains per dry standard cubic foot) when corrected to 7% oxygen content in the exhaust gas.

- The removal of HCl from the exhaust gas by the PAS must be 99% or greater, or the HCl emission rate must be less than 4 lb/hr.

Agent concentration in the stack must be below the Allowable Stack Concentration (ASC), equal to 0.03 mg/m^3. In addition, there were requirements to carry out the following:

- Monitor the MPF exhaust-stack emissions for:
  - O_2 (oxygen)
  - CO_2 (carbon dioxide)
  - Volatile and semivolatile PICs
  - PCDD/F
  - Trace Metals
  - CO (carbon monoxide)

- Analyze the incinerator liquid and solid process samples for:
  - Volatile and semivolatile PICs
  - PCDD/F
  - Cl^- (Chloride, soluble)
  - F^- (Fluoride, soluble)
  - PO_4^{-3} (Phosphate, soluble)
  - pH
  - SO_4^{-2} (Sulfate, soluble)
  - Reactivity

There was an in-house requirement to also monitor SO_2, NO_x, total hydrocarbons and particle size distribution.

1.2 SCOPE OF THIS REPORT

This report presents the test procedures and results for the HD trial burn (i.e., four test runs) in the MPF at JACADS, as well as the findings from the concomitant evaluation of the associated PAS.

The sampling team included two sampling coordinators and a chemist from SRI and an eight-member sampling crew. The sample analyses for organics and inorganics were performed by SRI in SRI's Birmingham laboratories. METCO Environmental was a subcontractor to SRI to perform some of the field activities. Observers were present from the Environmental Protection Agency (EPA), USA CMDA, PMCD, Southwest Research Institute (SwRI), EPA's contractor Midwest Research Institute and UE&C.

2.0 SUMMARY OF DATA

A summary of MPF system performance relative to RCRA criteria is presented in Table 2-1.

HD vapor (the designated POHC) in the stack and blower duct was monitored with the ACAMS, which is an automatic gas chromatograph that is designed to analyze chemical agents GB, VX or HD. The ACAMS was capable of detecting and quantifying chemical agent concentrations at approximately one-fifth of the ASC. No HD was detected at either location during any of the four test runs. For this reason the DRE was calculated using the ACAMS LOQ. Thus, in each instance where a DRE appears, it is expressed as a greater than number. The DRE for HD ranged from >99.9996% to >99.9997%.

Particulate emissions, corrected to 7% O_2, in the stack ranged from 0.54 to 13.4 mg/dscm based on Method 5 Acid Train (M5AT) data and from 1.23 to 8.45 mg/dscm based on the Multiple Metals Train (MMT) data. The average of the M5AT and MMT particulate concentrations ranged from 0.89 to 10.92 mg/dscm. These concentrations are significantly less than the 180 mg/dscm allowed.

HCl was detected in the stack gas at 0.05 lb/hr during one of the four test runs. None was detected during the other three test runs. This is well below the allowable emission rate of 4.0 lb/hr.

The one hour rolling average CO concentration (corrected to 7% oxygen) averaged less than 20 ppm for all four test runs. The permit limit is 100 ppm CO corrected to 7% oxygen.

2.1 STEADY STATE OPERATING CONDITIONS

The JACADS RCRA Part B permit requires that the furnace be operating at steady state conditions prior to introduction of any hazardous waste. Based on a review of the process data acquisition and recording (PDAR) system data, the furnace was operating at steady state conditions.

The range of average gas temperatures in the Primary Chamber during the four hour test runs was between 1408 and 1461°F as shown in Table 2-1. The average afterburner temperature during each run was between 1998 and 2003°F. These values are well within the required range.

2.2 DESTRUCTION OF CHEMICAL AGENT

Stack emissions of HD were not detected during the MPF trial burn. The stack was monitored both in the stack house and in the blower duct. The sensitivity (LOQ) of the HD monitoring system, i.e., the ACAMS, was approximately one fifth of the ASC (0.03 mg/m^3) for HD in all four tests. Based on this level of capability, the actual level of HD that could have been detected was below 0.006 mg/m^3. More than one ACAMS was used to monitor the stack. These are located at the blower (one ACAMS) and the exhaust stack (two ACAMS, one operating with the other as a standby system).

TABLE 2-1

SUMMARY OF SYSTEM TEST CONDITIONS AND RESULTS

Parameter	Units	TR1	TR2	TR3	TR4	Requirement
Average Agent Quantity per Container	lb	12.8	51.8	58.4	60.3	≤73.1
HD Evaporation Rate (Maximum)	lb/hr	54	114	111	105	≤146.2
HD Concentration in Stack	mg/m^3	ND[a]	ND	ND	ND	<0.03 mg/m^3
DRE - HD	%	>99.9996	>99.9997	>99.9997	>99.9997	≥99.99
Primary Chamber Temp.	°F					
First Zone		1408	1425	1418	1457	1450 ± 250[b]
Second Zone		1456	1453	1460	1461	1450 ± 250
Third Zone		1459	1449	1449	1451	1450 ± 250
Afterburner Temp.	°F	2003	2003	2003	1998	2000 +250 -100
CO (corr. to 7% O_2)	ppm					
Afterburner Out. Avg.		9.0	9.0	1.7	1.1	
PAS One Hr. Rolling Avg.		13.0	12.7	2.0	2.1	≤100[c]
Particulate in Stack[d]	mg/dscm					
Corrected to 7% O_2		10.92	2.68	3.13	0.89	≤180
Corrected to 12% CO_2		13.35	3.29	3.79	1.03	
HCl Emissions	lb/hr	ND[e]	0.0497	ND	ND	≤4
Stack Gas Flow[d]	acfm	11,338	11,918	11,801	11,772	
	dscfm	6,002	6,333	6,150	6,121	
Oxygen (Orsat)[d]	%	14.5	14.8	14.5	14.2	
Carbon Dioxide (Orsat)[d]	%	4.6	4.3	4.5	4.9	

[a]ND = None Detected. Detection limits 0.0054, 0.0066, 0.0069, 0.0066 mg/m^3 for Test Runs 1,2,3,4 respectively.
[b]The permit requirement of 1450 ± 150°F was revised to 1450 ± 250°F by Memorandum of Understanding.
[c]100 ppm is the hourly rolling average limit. There is an additional peak limit of 200 ppm for five minutes. Both corrected to 7% oxygen.
[d]Average of MMT and M5AT particulate results.
[e]ND = None Detected. Detection limits 0.00326, 0.00277, 0.00328 lb/hr for Test Runs 1,3,4 respectively.

To calculate the DRE for HD, an approximation of the evaporation rate, determined as recommended by the EPA personnel observing the trial burn, was used as the feed rate. Based on this feed rate and the minimum amount which could have been detected, the DRE exceeded the RCRA requirement of 99.99% for all four test runs.

2.3 PARTICULATE EMISSIONS

Data from the M5AT and MMT were used to calculate particulate emissions.

Particulate concentrations (corrected to 7% O_2) in the four MPF test runs were, respectively, 13.4, 3.10, 4.66 and 0.54 mg/dscm from the M5AT results and 8.45, 2.25, 1.59 and 1.23 mg/dscm from the MMT results. Hence, the MPF particulate emission levels were well below the RCRA particulate limit of 180 mg/dscm at an oxygen content of 7% in the stack. The corresponding measured particulate concentrations after correction of the data to 12% CO_2 (this is not a RCRA requirement but is required by certain state agencies) were 16.3, 3.83, 5.63 and 0.62 mg/dscm from the M5AT and 10.4, 2.74, 1.94 and 1.44 mg/dscm from the MMT.

The particle size distribution, measured as a composite of all four test runs, was found to be bimodal, with about 70% of the particulate matter in a mode centered at about 0.3 μm and the remaining 30% in a mode centered at about 10 μm. The very low particulate concentrations in the stack gases precluded making individual measurements for each test run.

2.4 HCl EMISSIONS

No HCl was detected in the stack gas (detection limit, <0.0033 lb/hr) in three of the four test runs. A measurable emission rate of 0.05 lb/hr was found in one test run. The allowable limit for HCl emission is 4 lb/hr or 99% removal. Thus, the HCl emission rate for each test run was well under the limit.

2.5 CARBON MONOXIDE

CO is measured just downstream of the afterburner and in the stack gas. The post afterburner measurement is controlled by the RCRA permit. The hourly rolling average is limited to below 100 ppm (corrected to 7% O_2) with peaks of 200 ppm of less than five minutes duration allowed. This data is automatically collected by the PDAR system and saved.

The maximum CO concentration, recorded by the system during the test runs, was 20 ppm. The rolling average maximum value for all four test runs was 18 ppm. Maintaining a consistently low CO concentration is an indication of system control and good combustion efficiency.

2.6 METALS

2.6.1 Analysis of Liquid Process Samples for Metals

The process liquids and fuel oil were analyzed for: arsenic, selenium, chromium, cadmium, lead, barium, beryllium, silver, tin, antimony, zinc, cobalt, nickel, vanadium, copper, mercury and thallium. Table 2-2 lists the Toxicity Characteristic Leachate Procedure (TCLP) metals found in excess of the regulatory limit and other metals found in quantifiable concentrations. No regulatory limit exists for the non-TCLP metals. They were included in the analyses to characterize the system.

TABLE 2-2

METALS IN PROCESS SAMPLES AND FUEL OIL
(all results mg/L)

	TR1	TR2	TR3	TR4	TCLP Limit
TCLP METALS IN EXCESS OF LIMITS					
Scrubber Liquor Pre Test	ND[a]	ND	ND	ND	--
Scrubber Liquor Post Test	ND	ND	ND	ND	--
Scrubber Brine Pre Test					
Lead	8.63	4.03	7.48	1.06	5.0
Scrubber Brine Post Test					
Lead	7.83	7.48	6.43	2.14	5.0
Caustic Pre Test	ND	ND	ND	ND	--
Caustic Post Test	ND	ND	ND	ND	--
Process Water Pre Test	ND	ND	ND	ND	--
Process Water Post Test	ND	ND	ND	ND	--
Fuel Oil Pre Test	ND	ND	ND	ND	--
Fuel Oil Post Test	ND	ND	ND	ND	--
NON-TCLP METALS FOUND IN QUANTIFIABLE CONCENTRATIONS					
Scrubber Liquor Pre Test					
Antimony	<0.10	<0.10	<0.10	<0.10	NA[b]
Zinc	0.19	0.21	0.099	0.11	NA
Nickel	<0.05	<0.05	<0.05	<0.05	NA
Copper	0.10	0.10	0.058	0.059	NA
Scrubber Liquor Post Test					
Antimony	<0.10	<0.10	<0.10	0.26	NA
Zinc	0.53	0.099	0.16	0.20	NA
Nickel	0.059	<0.05	<0.05	<0.05	NA
Copper	0.22	0.058	0.054	<0.05	NA

[a]None detected.
[b]NA = No regulatory limit per 40CFR261.24.

TABLE 2-2 (CONTINUED)

METALS IN PROCESS SAMPLES AND FUEL OIL
(all results mg/L)

	TR1	TR2	TR3	TR4	TCLP Limit
NON-TCLP METALS FOUND IN QUANTIFIABLE CONCENTRATIONS (cont'd)					
Scrubber Brine Pre Test					
Tin	0.38	0.14	0.15	<0.10	NA[b]
Zinc	6.64	2.20	3.62	0.58	NA
Nickel	1.08	0.32	0.33	<0.05	NA
Vanadium	0.12	0.074	0.090	0.048	NA
Copper	0.19	1.00	1.80	0.25	NA
Scrubber Brine Post Test					
Tin	0.50	0.15	0.68	0.26	NA
Zinc	5.88	3.62	3.48	1.56	NA
Nickel	0.82	0.33	0.34	0.18	NA
Vanadium	0.13	0.090	0.076	0.056	NA
Copper	2.30	1.80	1.96	0.96	NA
Caustic Pre Test					
Tin	<0.10	<0.10	0.24	<0.10	NA
Zinc	0.26	0.56	0.48	<0.05	NA
Copper	<0.05	0.24	0.24	<0.05	NA
Caustic Post Test					
Tin	<0.10	0.24	<0.10	0.26	NA
Zinc	0.18	0.48	<0.05	0.58	NA
Copper	<0.05	0.24	<0.05	<0.05	NA
Process Water Pre Test					
Zinc	0.15	0.50	0.09	0.15	NA
Vanadium	0.17	<0.02	<0.02	<0.02	NA
Copper	<0.05	<0.05	<0.05	<0.05	NA
Process Water Post Test					
Zinc	0.13	0.09	0.43	0.04	NA
Vanadium	<0.02	<0.02	0.31	<0.02	NA
Copper	<0.05	<0.05	0.22	<0.05	NA
Fuel Oil Pre Test					
Nickel	0.11	<0.05	<0.05	<0.05	NA
Zinc	<0.05	<0.05	<0.05	<0.05	NA
Fuel Oil Post Test					
Nickel	<0.05	<0.05	<0.05	<0.05	NA
Zinc	<0.05	<0.05	<0.05	0.09	NA

[b]NA = No regulatory limit per 40CFR261.24.

2.6.2 Stack Emissions of Metals

MMT samples were tested for 20 metals including all eight of the RCRA characteristic TCLP metals. Only twelve metals were found in one or more of the samples. In some cases, these metals were also found in the blanks. Five of the twelve metals, manganese, boron, zinc, phosphorus and chromium were present in all four test run samples. Chromium is the only one of these five which is a TCLP metal. Currently there is no RCRA limit applicable to these emissions from hazardous waste incinerators, but it should be noted that the concentration of most metals was near the applicable method detection limit.

Table 2-3 lists the samples and metals for which a quantifiable amount was found.

2.6.3 Composite Ash Samples

Composite ash samples were made from the residues in four ton containers from each test run. An additional sample was taken from a single ton container processed during Test Run #3. Table 2-4 provides the results of the TCLP extracts analyses of the MPF ash samples. Analyses were performed for the eight TCLP metals as well as nine additional metals. None of the TCLP metals were found at concentrations above the regulatory limits. There is no RCRA standard for the other non-TCLP metals. However, those found were present in low concentrations.

2.7 PRODUCTS OF INCOMPLETE COMBUSTION

The MM5 train samples, fuel oil samples, ash samples and aqueous process samples were analyzed for the presence of volatile and semivolatile PICs. At this time, there is no regulatory limit with which to compare these results.

Table 2-5 presents the results for stack emissions of semivolatile PICs.

Table 2-6 presents the results for stack emissions of volatile PICs.

Results for the fuel oil, process samples and ash are discussed in Sections 5.3.1 and 5.3.2 of this report.

2.8 DIOXIN/FURAN EMISSIONS

The stack gas, process samples and fuel oil were sampled for the presence of PCDD/F.

Some dioxins were detected in the stack at levels above those associated with the blank samples. These are summarized in Table 2-7. Table 2-8 lists the target compounds which were found. No 2,3,7,8-Tetra Chlorodibenzo dioxin/furan (TCDD/F) was detected in any of the samples.

The levels of dioxins found in the stack gas were low and for the most part close to the detection limit. The few that were present at higher levels were either hepta and octa chlorinated congeners or were not target PCDD/F.

TABLE 2-3

SYSTEM PERFORMANCE FOR METALS

	Test Run			
	1	2	3	4
Sample Volume (dscm)	1.25	1.39	1.34	1.33
Metals	Concentration[a], μg/dscm			
Arsenic	0.8	18.4	ND[b]	1.6
Selenium	5.7	4.2	ND	ND
Chromium	1.5	2.3	2.6	2.6
Lead	ND	16	6.3	17
Barium	ND	ND	ND	8.2
Tin	ND	ND	12	ND
Phosphorus	97	43	81	84
Zinc	21	27	21	22
Boron	205	81	161	132
Manganese	0.2	8.6	409	2.1
Copper	ND	5.1	3.8	ND
Mercury	ND	6.4	4.7	2.0

[a]Values blank corrected using the field blank results.
[b]ND = Not detected, detection limits listed below.

Run 1: 4.0 μg/dscm for Lead and Copper
8.0 μg/dscm for Barium and Tin
1.6 μg/dscm for Mercury

Run 2: 7.2 μg/dscm for Barium and Tin

Run 3: 3.7 μg/dscm for Arsenic and Selenium
7.5 μg/dscm for Barium

Run 4: 3.8 μg/dscm for Selenium and Copper
7.5 μg/dscm for Tin

TABLE 2-4

METALS IN MPF ASH
All Results Reported in μg/mL

Test Run	1	2	3		4	
Container No(s).[a]	21,22,34,35	39,40,45,46	41,42,47,52	44[b]	55,56,57,58	TCLP Blk.
As*	<0.2	<0.1	<0.2	<0.2	<0.1	<0.1
Se*	<0.1	<0.2	<0.2	<0.2	<0.1	<0.1
Cr*	0.77	<0.05	<0.05	1.30	1.99	0.13
Cd*	0.44	<0.05	0.07	0.55	0.27	<0.05
Pb*	0.68	3.22	0.37	1.85	1.12	<0.1
Ba*	0.18	<0.1	<0.1	0.13	<0.1	<0.1
Be	<0.05	<0.05	<0.05	<0.05	<0.05	<0.05
Ag*	<0.1	<0.1	<0.1	<0.1	<0.1	<0.1
Sn	<0.1	<0.1	<0.1	0.10	<0.1	<0.1
Sb	<0.05	<0.05	<0.05	<0.05	<0.05	<0.05
Zn	2.54	0.42	0.10	0.61	0.11	<0.05
Co	1.30	0.95	1.33	1.07	1.58	<0.05
Ni	0.30	0.40	0.48	0.68	0.64	<0.05
V	0.82	0.43	0.19	1.09	0.62	<0.05
Cu	0.31	0.06	0.43	<0.05	<0.05	<0.05
Hg*	<0.0005	<0.0005	<0.0005	<0.0005	<0.0005	<0.0005
Tl	<0.01	<0.01	<0.01	<0.01	<0.01	<0.01

[a]Sample was a composite of ash from listed containers.
[b]Contained maximum residual agent.
*Indicates TCLP metal.

TABLE 2-5

MPF SYSTEM PERFORMANCE FOR SEMIVOLATILE PRODUCTS OF INCOMPLETE COMBUSTION

	Test Run			
	1	2	3	4
Sample Volume (dscm)	5.03	4.69	4.73	4.04
Emitted Substances	Concentration[a], μg/dscm			
2-Methylphenol	60	42	35	34
Benzoic acid	34	ND[b]	ND	12
Dimethyl phthalate	9.4	81	6.2	15
Benzyl alcohol	58	22	9.3	ND
Bis(2-ethylhexyl)phthalate	32	ND	ND	ND
3-Methyphenol	2.1	ND	ND	ND

[a]Values blank corrected using the blank train results.
[b]ND = Not detected. Detection limits:

Test Runs 2 and 3	3.2 μg/dscm for Benzoic acid and 2.1 μg/dscm for Bis(2-ethylhexyl)phthalate and 3-Methylphenol
Test Run 4	2.5 μg/dscm for Benzyl alcohol, 3-Methylphenol and Bis(2-ethylhexyl)phthalate

TABLE 2-6

MPF SYSTEM PERFORMANCE FOR VOLATILE PRODUCTS OF INCOMPLETE COMBUSTION

	Test Run			
	1	2	3	4
Sample Volume (dscm)	0.0816	0.0798	0.0802	0.0807
Emitted Substances	Concentration[a], μg/dscm			
Acetone	16	8.3	ND[b]	3.9
Chloromethane	1.8	7.5	7.3	2.2
Vinyl Chloride	0.53	2.3	9.9	0.48
Carbon Disulfide	3.7	2.7	3.1	4.7
Methylene Chloride	13	10	1.2	1.7
2-Butanone	24	22	23	21
Chloroform	0.43	1.2	1.4	0.79
Carbon Tetrachloride	1.3	2.5	2.0	2.1
Benzene	27	3.8	4.2	7.7
Toluene	2.9	6.7	13	1.6
Chlorobenzene	ND	ND	0.66	0.26
Styrene	7.2	7.4	6.7	9.4
Bromoform	5.4	8.0	7.0	4.5
Ethylbenzene	0.24	ND	0.50	ND
1,1,1 Trichloroethane	0.43	ND	ND	ND
1,1 Dichloroethane	ND	0.21	ND	ND

[a]Values blank corrected using the field blank results.
[b]ND = Not detected. (Detection limit is 0.2 μg/dscm for volatile organics.)

TABLE 2-7

MPF SYSTEM PERFORMANCE FOR PCDD/PCDF

		Test Run			
		1	2	3	4
Sample Volume (dscm)		5.03	4.69	4.73	4.04
Emitted Substances		Concentration[a], μg/dscm			
PCDD/PCDF	TCDF	0.000127	0.0000645	0.000112	0.0000446
	TCDD	0.00000896	0.0000078	0.0000119	0.00000523
	PeCDF	0.0000289	0.0000234	0.000165	ND[b]
	HxCDF	0.00000273	ND	0.000318	0.0000471
	HpCDF	0.0000595	ND	0.000524	0.000114
	HpCDD	ND	ND	0.0000939	ND
	OCDF	ND	ND	0.000196	ND
	OCDD	ND	ND	0.000056	ND

[a]Values blank corrected using the blank train results.
[b]ND = Not detected. Detection limits:

Run 1: 0.0000199 μg/dscm for HpCDD
0.0000398 μg/dscm for OCDF and OCDD

Run 2: 0.0000213 μg/dscm for HxCDF, HpCDF and HpCDD
0.0000426 μg/dscm for OCDF and OCDD

Run 4: 0.0000248 μg/dscm for PeCDF and HpCDD
0.0000496 μg/dscm for OCDF and OCDD

TABLE 2-8

SUMMARY OF TARGET PCDDs/PCDFs DETECTED IN MM5 TRAINS FROM MPF

Sample Description	Amount Found - Nanograms								
	2,3,4,7,8-PeCDF	1,2,3,4,7,8-HxCDF	1,2,3,6,7,8-HxCDF	2,3,4,6,7,8-HxCDF	1,2,3,4,6,7,8-HpCDF	1,2,3,4,7,8,9-HpCDF	1,2,3,4,6,7,8-HpCDD	OCDF	OCDD
Test Run 1 Filter and Front Wash	ND	ND	ND	ND	ND	ND	ND	ND	ND
Test Run 1 Resin and Back Wash	ND	ND	ND	ND	ND	0.203 (0.040)	ND	ND	ND
Test Run 2 Filter and Front Wash	ND	ND	ND	ND	ND	ND	ND	ND	ND
Test Run 2 Resin and Back Wash	ND	ND	ND	ND	ND	0.149 (0.032)	ND	ND	ND
Test Run 3 Filter and Front Wash	ND	ND	ND	ND	ND	ND	ND	ND	ND
Test Run 3 Resin and Back Wash	0.333 (0.070)	0.116 (0.025)	0.121 (0.026)	0.260 (0.055)	1.28 (0.271)	0.412 (0.087)	0.180 (0.038)	0.925 (0.196)	0.609 (0.129)
Test Run 4 Filter and Front Wash	ND	ND	ND	ND	ND	ND	ND	ND	ND
Test Run 4 Resin and Back Wash	ND	ND	ND	ND	0.198 (0.049)	0.203 (0.050)	ND	ND	ND

[a]ND = Not detected above reporting limit of 0.02 ng for TCDFs and TCDDs; 0.10 ng for PeCDFs, PeCDDs, HxCDFs, HxCDDs, HpCDFs, and HpCDDs; and 0.20 ng for OCDFs and OCDDs.

As a comparison, previous studies of municipal incinerators have demonstrated emissions of dioxins in the range of 50-7000 ng/dscm. Moreover, previous conversations with EPA personnel involved in the assessment of incinerator performance suggest that dioxin/furan emissions of 10 ng/dscm should not cause concern.

Results for the fuel oil, process samples and ash are discussed in Section 5.4 of this report.

2.9 ANIONS IN PROCESS SAMPLES

The process liquids and fuel oil were analyzed for Cl^-, F^-, PO_4^{-3} and SO_4^{-2}. Table 2-9 summarizes the results of these analyses. Detection limits for these samples are given in Table 2-10.

No phosphates were detected in any of the samples. This is as expected since HD is not a phosphorous containing compound. No significant increases in fluoride concentration were noted between pre and post run samples. HD is not a fluoride containing compound and no increases in fluoride concentrations were expected. Previous analyses from other trial burns processing nerve agents showed significant phosphate and fluoride concentrations since these compounds contain fluorine and phosphorous.

The post test results for the brine, and to a lesser extent, also for the scrubber liquor, showed increases in Cl^- and SO_4^{-2} when compared to the pretest samples. This is as expected, since Agent HD does contain significant chlorine and sulphur based moieties. Chloride and sulfate detection in these samples demonstrates that the scrubber is removing the acidic combustion products from the exhaust gas stream.

2.10 TOTAL HYDROCARBONS

Total hydrocarbons (THC) in the stack gas were determined by EPA Method 25A. The results are presented in Table 2-11.

This data was taken to characterize the emissions. It is not subject to any regulatory limits.

2.11 QUALITY ASSURANCE/QUALITY CONTROL

Assuring valid results in a sampling and analysis program of the type carried out during the MPF HD Trial Burn requires that a thorough quality assurance/quality control (QA/QC) program be followed. Such a QA/QC program was followed for all sampling and laboratory functions for this trial burn.

Typical procedures followed, as appropriate for each sample, included:

- instrument and sampling system calibrations
- initial and continuing instrument calibration verifications
- sample preservation and identification
- replicate samples and analyses
- analysis of blank samples, matrix spikes and surrogates
- maintaining complete chain of custody documentation for all samples

TABLE 2-9

ANIONS IN MPF PROCESS LIQUID SAMPLES

	Concentration, mg/L											
	Test Run 1			Test Run 2			Test Run 3			Test Run 4		
	F^-	Cl^-	SO_4^{-2}	F^-	Cl^-	SO_4^{-2}	F^-	Cl^-	SO_4^{-2}	F^-	Cl^-	SO_4^{-2}
Scrubber Liquor Pre Test	ND[a]	517	185	ND	495	144.6	ND	470	192	ND	428	152
Scrubber Liquor Post Test	68.23	914	261	ND	470	192	ND	580	316	ND	452	215
Brine Pre Test	ND	20700	14000	ND	10100	10300	ND	18900	17500	ND	13100	11700
Brine Post Test	ND	26200	20200	ND	18900	17500	ND	22800	22480	ND	20700	18400
Caustic Pre Test	704	2040	ND	646	2320	ND	610.9	2350	ND	561.3	2100	ND
Caustic Post Test	777	2750	ND	610.9	2350	ND	561	2240	ND	557	2250	ND
Process Water Pre Test	ND	337	6.53	ND	343	7.13	ND	356	7.92	ND	377	8.46
Process Water Post Test	ND	337	6.24	ND	356	7.92	ND	337	7.6	ND	411	10.2
Fuel Oil Pre Test	ND	ND	ND	ND	ND	ND	ND	ND	ND	ND	ND	ND
Fuel Oil Post Test	ND	ND	ND	ND	ND	ND	ND	ND	ND	ND	ND	ND

[a]ND = Not detected. (Detection limits given in Table 2-10.)

TABLE 2-10

DETECTION LIMITS FOR ANIONS IN PROCESS LIQUIDS

Description	Dilution Factors	Fluoride mg/L	Chloride mg/L	Phosphate mg/L	Sulfate mg/L
Scrubber Liquor	1:50/1:1	31.3	46.9	10.9	5.63
Brine	1:2000	1250	1880	21900	11300
Caustic	1:200	125	188	2190	1130
Process Water	1:50/1:1	31.3	46.9	10.9	5.63
Fuel Oil	(1:1)	0.625	0.938	10.9	5.63

TABLE 2-11

MPF TOTAL HYDROCARBONS IN STACK GAS
(Expressed as Propane)

Test Run No.	Gas Phase Monitor (ppm)	Condensate (ppm)	Total (ppm)	Emission Rate (lb/hr)
1	2.0	0.17	2.17	0.166
2	2.0	1.17	3.17	0.255
3	2.0	0.41	2.41	0.147
4	2.0	0.82	2.82	0.224

A more detailed discussion of the QA/QC program, as it relates to each type of sample, is found in Section 6 of this report.

3.0 FACILITY DESCRIPTION

3.1 THE JACADS FACILITY

The JACADS facility is located on Johnston Island, which is the largest of four largely man-made islands comprising the Johnston Atoll, located in the central Pacific Ocean. The nearest populated islands are the Hawaiian Islands which are more than 700 nautical miles to the northeast and the closest landfall is French Frigate Shoals which is about 400 miles north. Figure 3-1 shows the location of Johnston Atoll. Johnston Island, as shown in Figure 3-2, is roughly rectangular in shape and measures about two miles long and one-half mile wide.

Chemical agent munitions, including rockets, mines, projectiles, bombs and bulk agent ton containers are stored in bunkers located on the southwestern part of Johnston Island. This area, called the Red Hat Area, is under 24-hour electronic surveillance and armed security guard by the US Army.

The JACADS facility is situated immediately adjacent to the Red Hat Area minimizing the distance munitions are transported. Once inside the munitions demilitarization building (MDB) all normal munition handling is by conveyor and robotics, thereby reducing potential personnel exposure. In addition, fugitive emissions are controlled by the design of the HVAC system. All leakage is inward toward the incinerator which essentially uses the air for combustion. The JACADS demilitarization process is based on the thermal destruction of toxic agents utilizing two-stage high temperature incinerators.

The process consists of draining the liquid chemical agent from the storage/munition system followed by destruction of the agent, deactivation of explosives and thermal decontamination of the drained parts in the following incinerator systems:

1. The DFS processes drained rockets including the fiberglass shipping and firing (S/F) tubes, energetic materials such as propellant, fuses and bursters, and any residual agent.

2. The LIC processes liquid chemical agent drained from the storage/munition system and Spent Decontamination Solution (SDS). The SDS results from cleanup operations to reduce the level of chemical agent present in an area or item.

3. The MPF processes drained metal ton containers, bombs and projectiles; and any residual agent.

The JACADS facility also includes the DUN which processes the dunnage related to munition shipment such as cardboard and wooden boxes.

Flue gases from the DFS, the MPF, and the LIC are each scrubbed by a dedicated wet PAS. The DUN has a dry flue gas cleaning system. The scrubber liquid from the wet scrubbers is fed to dryers to reduce the brine to a dry salt.

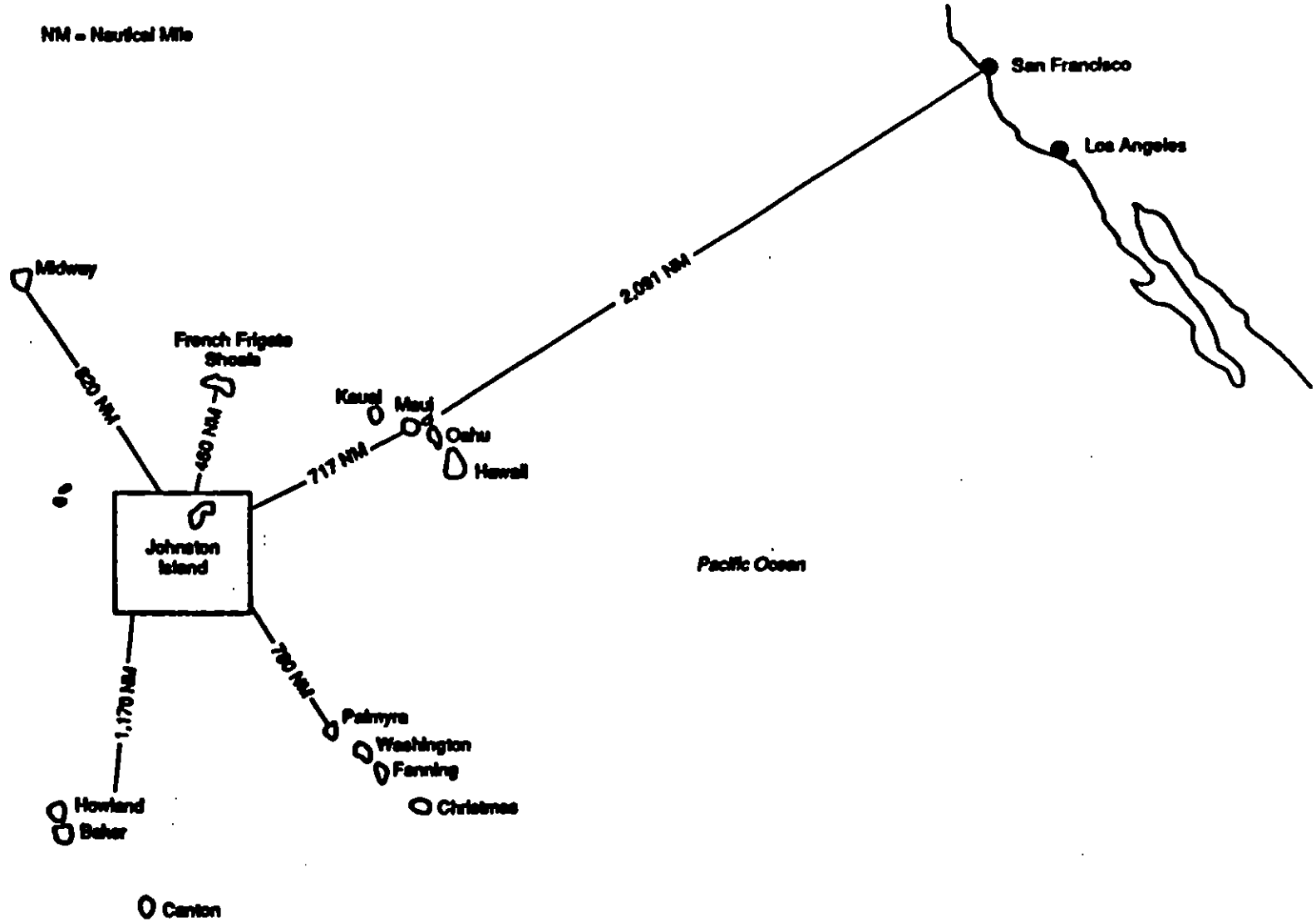

FIGURE 3-1. LOCATION OF JOHNSTON ISLAND

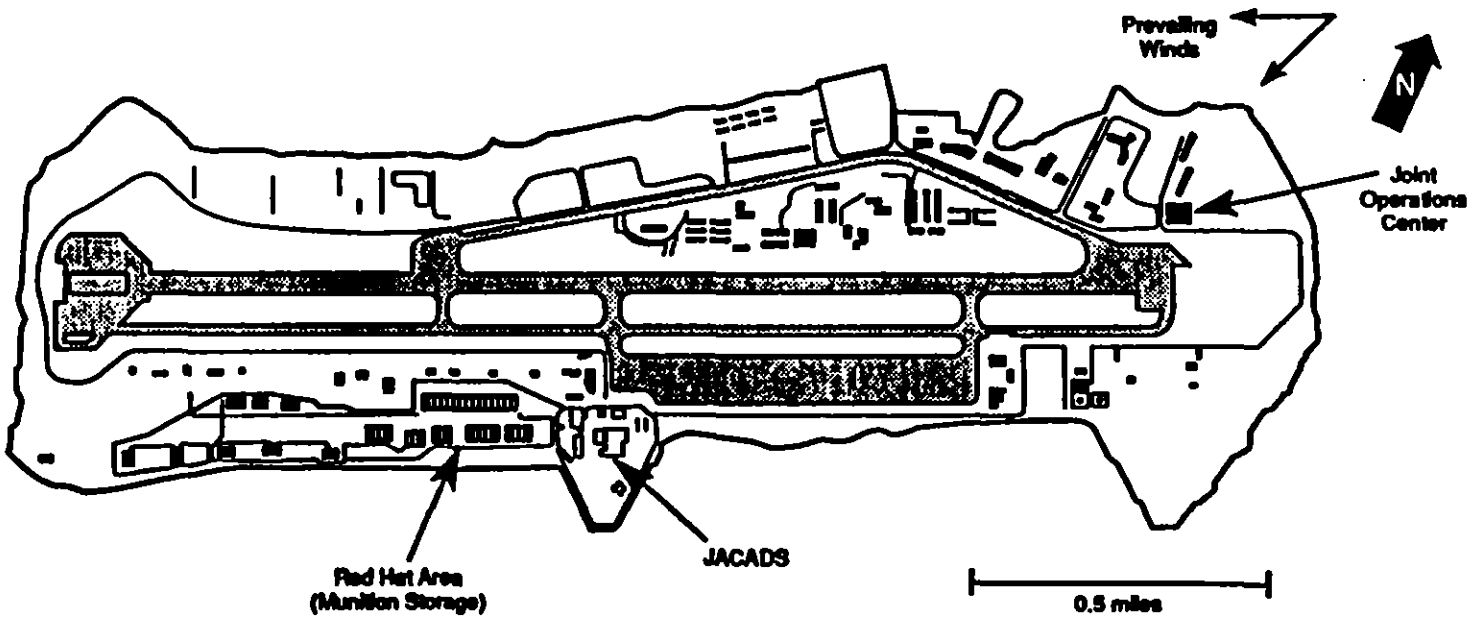

FIGURE 3-2. JOHNSTON ISLAND

3.2 *MPF DESCRIPTION*

The MPF is designed to thermally decontaminate bulk storage containers and munitions of residual chemical agent (VX, GB and HD), subsequent to draining of the chemical agent and removal of any energetic materials. The MPF system consists of the furnace, the afterburner and the PAS. Figure 3-3 provides a schematic illustration of the principal components of the MPF and afterburner. Figure 3-4 provides a schematic illustration of the MPF PAS.

The MPF furnace (primary chamber) has three separate firing zones through which the munitions are conveyed, providing a total residence time of approximately 100 minutes. The first and second furnace zones each have four dual fuel (JP-5 fuel oil or propane) burners rated at 2,600,000 Btu/hr. The final zone uses two burners, each also rated at 2,600,000 Btu/hr. While in the furnace, the munitions are maintained at temperatures between 1400°F and 1600°F. (5X decontamination requires 15 minutes at 1000°F.) Process parameters measured in the furnace are:

Oil Flow
Combustion-Air Flow
Propane Flow
Temperatures in Zones 1, 2 & 3
Furnace Pressure
Top and Bottom Water Spray Flow Rates in Zones 1 & 2
Oxygen in Crossover Duct

Decontaminated munitions are transferred to the exit conveyor airlock. After agent sampling of the airlock is complete, the munitions are conveyed to the MPF discharge tray unloading conveyor. This conveyor then discharges to the MPF discharge cooling conveyor. The munitions are stored here until transfer to the Residue Handling Area (RHA) for disposal.

Primary chamber exhaust gas passes to the MPF afterburner, which has two burners, each rated at 4,200,000 Btu/hr. The exhaust gas is heated to 2000°F for a minimum of 0.5 second residence time before entering the MPF PAS.

A general description of the PAS subsystems and their function is provided below:

a. The quench tower cools the exhaust gases before they enter the venturi scrubber. Alkali brine from the packed tower sump is sprayed into the quench tower to reduce the temperature of the flue gas. The operating parameters pertaining to the quench tower that are monitored are:

   Brine Flow Rate
   Outlet-Gas Temperature
   Brine Pump Pressure
   Pressure Drop
   Process Water Level

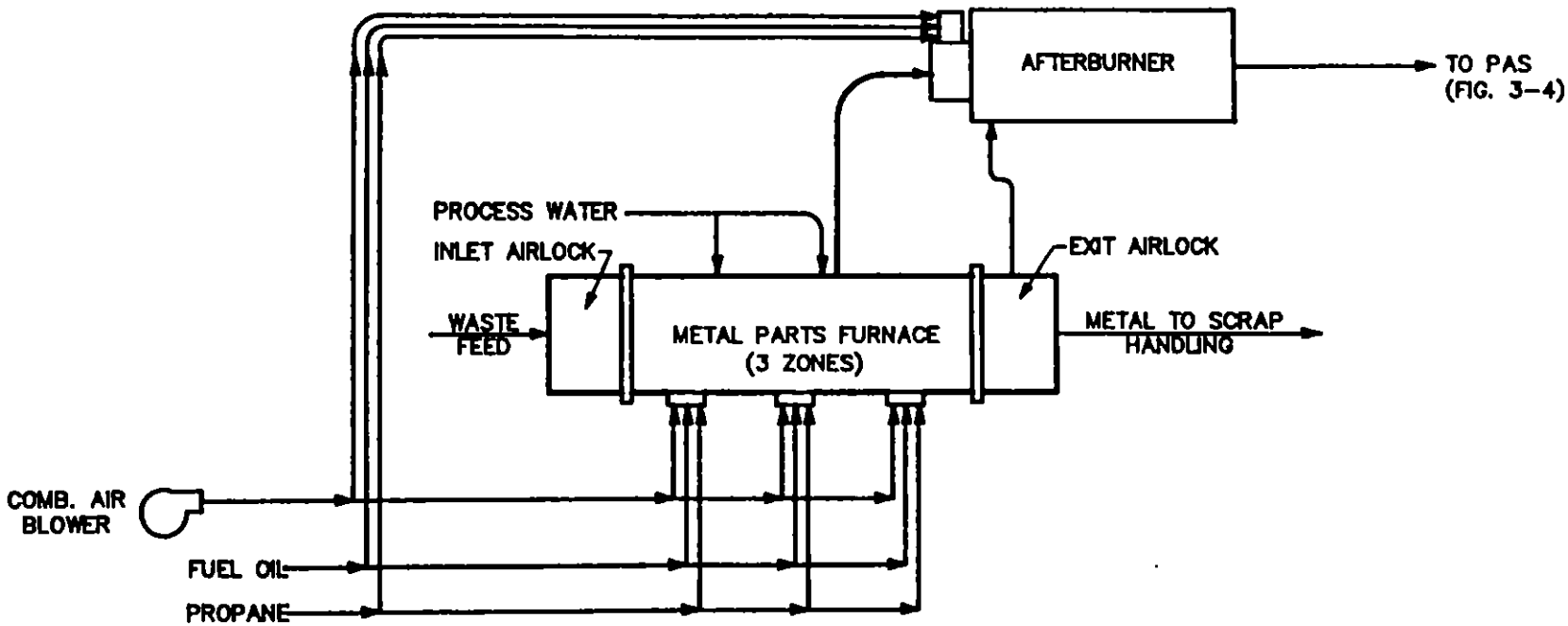

FIG. 3-3 – SCHEMATIC DIAGRAM OF THE METAL PARTS FURNACE

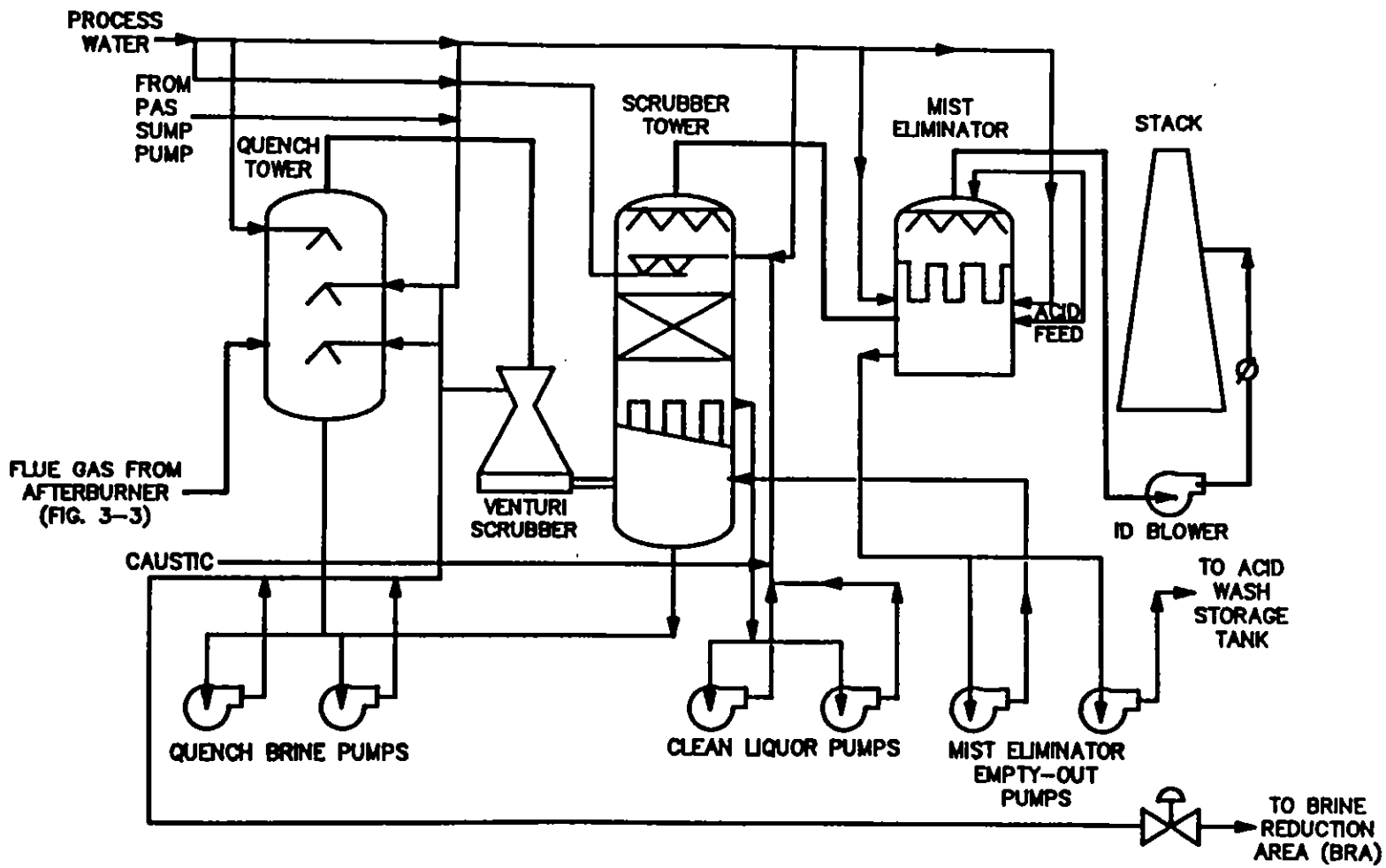

FIG. 3-4 – SCHEMATIC DIAGRAM OF THE MPF POLLUTION ABATEMENT SYSTEM (PAS)

b. The venturi scrubber is a variable-plug throat design to maintain a constant pressure drop of 5 to 50 in. w.c. Scrubber brine from the packed tower sump is injected into the top of the venturi. Brine droplets formed in the venturi collect particulate matter principally by collision. Neutral salts are formed from acid gases, such as HCl and SO_2, by reaction with the caustic in the brine. The venturi scrubber is designed to remove 95% of all particles larger than 0.5 micron. The parameters monitored in the venturi are:

Brine Flow Rate
Pressure Drop

The brine pH and the brine density are monitored at the scrubber sump pump discharge line.

c. The packed-bed scrubber tower is designed to provide at least 95% sulfur dioxide removal. The packed bed consists of stainless steel pall rings. Clear liquor is used to irrigate the packed-bed section of the tower, and acid-gas removal is effected in the packed bed by reaction of the acidic gases with caustic in the clear liquor. The scrubber operates at a pressure drop of 1 to 10 in. w.c. Sensors monitor the following packed-bed parameters:

Liquor Pump Pressure
Liquor Flow Rate
Liquor pH
Liquor Density
Pressure Drop
Sump Level

d. The mist eliminators remove liquid carryover from the packed bed. The pressure drop across the mist eliminators is continuously monitored.

e. The induced-draft fan moves the exhaust gases through the PAS. Dampers control the flow to maintain a pressure in the MPF that is lower than the pressure of the surrounding atmosphere, i.e., a negative-pressure condition. The electrical current drawn by the fan is monitored continuously.

f. A 100-ft stack (common to DFS, LIC and MPF) serves to exhaust the clean gases to the atmosphere. This stack is of varying diameter due to its function as the end system for three of the four incinerators/kilns. This is the only PAS subsystem in the JACADS facility that is common to all three incinerators. The stack parameters that are monitored continuously are CO, O_2, NO_x, SO_2, and chemical-agent concentration, which is monitored by ACAMS/DAAMS (Depot Area Air Monitoring System).

3.3 AGENT FOR THE RCRA TRIAL BURN

The MPF is designed to thermally decontaminate drained chemical agent munitions and bulk storage containers. This trial burn was concerned with HD ton containers. The containers were punched and the agent drained prior to processing in the MPF. For the trial burn only, a residual heel of less than 73.1 pounds of agent was intentionally left in each container, after draining.

In routine operation, the ton containers will be drained to the maximum extent possible. The drained agent was processed in the LIC.

HD is the primary hazardous waste feed to the MPF and is a 40CFR261 Appendix VIII compound. Thus, Agent HD was designated the POHC for this test.

The chemical name for HD is 1,1' thiobis[2 chloroethane]. Its chemical formula is $C_4H_8Cl_2S$. Its molecular weight is 159.1 and its specific gravity is 1.27 (liquid) relative to water at 4°C and 5.5 (vapor) relative to air. It has a specific heat of 0.333 Btu/lb°F, a boiling point of 423°F, a flash point of 221°F and a heat of combustion of 8100 Btu/lb.

3.4 SAMPLING LOCATIONS

A summary of the sampling locations and methods is given in Table 3-1. Sample point locations on the stack are shown in Figure 3-5.

The sampling location for the Modified Method 5 (MM5) was approximately 52 ft. above the ground. The sampling ports were located 13 ft. (1.81 stack diameters) downstream from a constriction in the stack and 19 ft. 5 in. (2.71 stack diameters) upstream from a constriction in the stack. The stack-sampling location for the M5AT and MMT was 86 ft. above ground. The ports at this location were 13 ft. (2.90 stack diameters) downstream from a constriction in the stack and 14 ft. 1/2 in. (3.13 stack diameters) upstream from the outlet of the stack. Because of the close proximity of flow disturbances to the sampling levels, the sampling traverses were made with the maximum number of points (24) called for by the EPA methods. The actual locations of the points that were used are detailed in Tables 3-2 and 3-3.

3.5 FACILITY INSTRUMENTATION

The JACADS MPF facility includes several continuous emission monitors (CEMs) and a PDAR system. Specifically, there are O_2 monitors at the exhaust of the primary chamber, at the exhaust of the afterburner, and at the MPF induced draft fan outlet. CO monitors are located at the afterburner exhaust and the MPF induced draft fan outlet. The CO concentrations at the afterburner exhaust are corrected to 7% oxygen and shown as such on the control room consoles and in the PDAR data. Sulfur dioxide and nitrogen oxides are also monitored on the stack. ACAMS units are located at the MPF induced draft fan outlet and at the stack to provide agent-concentration data and rapid warning of detectable agent in the flue gases. ACAMS units also sample the exit air lock. Table 3-4 provides a general summary of the CEM characteristics and specifications for the MPF.

Process data are logged by the PDAR system continuously throughout all operations of the JACADS facility. Data are taken at approximately 1-sec intervals and averaged over a time span of 4 min. For each averaging period, the minimum, maximum, and average value of each process variable is logged.

TABLE 3-1

MPF SAMPLING LOCATIONS

Site from Figure 3-5	Location on Figure 3-5	Matrix	Sampling Method
B	Stack Platform	Stack Exhaust	M5 Acid/Part Train M5 Metals Train
A	Common House	Stack Exhaust	ACAMS Modified M5 VOST CEM NO_x THC (25A) SO_2 Particle Size
2	MPF	Blower Duct Exhaust	CEM
4	MPF	Blower Duct Exhaust	CEM
Not in Figure	Crossover Duct	Exhaust	CEM
Not in Figure	Outlet of PAS Loop Pumps - MPF Valve 660	Scrubber Brine	Grab
Not in Figure	Tap in Feed Line - MPF Valve 357	Caustic	Grab
Not in Figure	Outlet of PAS Loop Pumps - MPF Valve 670	Scrubber Liquor	Grab
Not in Figure	Tap in Feed Line - MPF Valve 505	Process Water	Grab
Not in Figure	Fuel Oil Tank Valve 332	Fuel Oil Feed	Grab
Not in Figure	NA	Residue from Ton Containers (Ash)	Grab

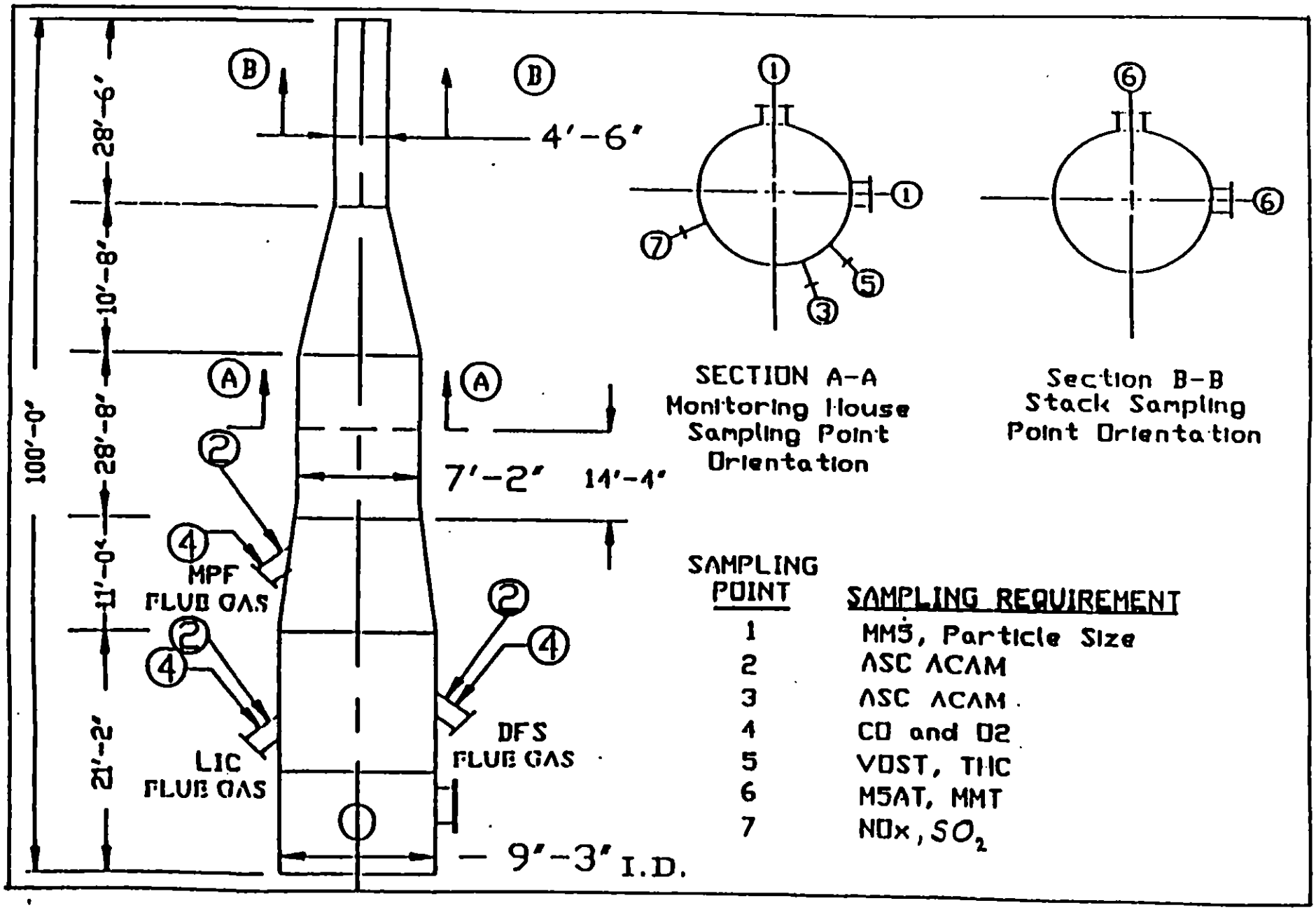

FIGURE 3-5. MPF, DFS, AND LIC STACK SAMPLE POINT LOCATIONS

TABLE 3-2

LOCATION OF SAMPLING POINTS FOR
METHOD 5 ACID TRAIN, MULTIPLE METALS TRAIN,
AND PARTICULATES

Point Number	Percent of Diameter from Wall	Distance from Wall, in.
1	2.1	1 1/8
2	6.7	3 5/8
3	11.8	6 3/8
4	17.7	9 9/16
5	25.0	13 1/2
6	35.6	19 3/16
7	64.4	34 11/16
8	75.0	40 3/8
9	82.3	44 5/16
10	88.2	47 1/2
11	93.3	50 1/4
12	97.9	52 3/4

The sampling ports are located 13 feet (2.90 stack diameters) downstream from a constriction in the stack and 14 feet 1/2 inch (3.13 stack diameters) upstream from the outlet of the stack. The locations of the sampling points were calculated as follows:

Port and Wall Thickness = 4 1/8 inches
Inside Stack Diameter = 53 7/8 inches

TABLE 3-3

LOCATION OF SAMPLING POINTS FOR
MM5 TRAIN AND PARTICLE SIZING

Point Number	Percent of Diameter from Wall	Distance from Wall, in.
1	2.1	1 13/16
2	6.7	5 3/4
3	11.8	10 3/16
4	17.7	15 1/4
5	25.0	21 9/16
6	35.6	30 11/16
7	64.4	55 7/16
8	75.0	64 9/16
9	82.3	70 7/8
10	88.2	75 15/16
11	93.3	80 3/8
12	97.9	84 5/16

The sampling ports are located 13 feet (1.81 stack diameters) downstream from a constriction in the stack and 19 feet 5 inches (2.71 stack diameters) upstream from a constriction in the stack. The locations of the sampling points were calculated as follows:

Port and Wall Thickness = 8 13/16 inches
Inside Stack Diameter = 86 1/8 inches

TABLE 3-4

FACILITIES EMISSIONS MONITORING INSTRUMENTATION

Parameter	Model & Type of Instrument	Sampling Location	Design Range	Operating Range	Accuracy	Precision
Oxygen	Thermox Model LS Electrochemical Analyzer	Exhaust Stack Primary Outlet Afterburner Exhaust	0 to 25% Oxygen in Exhaust Gases	0 to 25% Oxygen in Exhaust Gases	0.1%	0.5%
Carbon Monoxide	Anarad Model AR-50R NDIR	Exhaust Stack Afterburner Exhaust	0 to 500 ppm in Exhaust Gases	0 to 500 ppm in Exhaust Gases	±1% of full scale	±1% of full scale
HD	ACAMS Gas Chromatography	Exhaust Stack Blower Duct Discharge Air Lock	0 to 0.3 mg/m^3	to ASC (0.03 mg/m^3)	±25%	±25%
NO_x	Teco Model 44 Chemiluminescent	Exhaust Stack	0 to 500 ppm	0 to 500 ppm	±1%	±1%
SO_2	Western Research Model 721AT2	Exhaust Stack	0 to 500 ppm in Exhaust Gases	0 to 500 ppm	±0.5%	±0.5%

4.0 TEST PROCEDURES

4.1 PREPARATION FOR TESTING

All equipment and instrumentation was calibrated as required and was rendered operational prior to the start of the test. The sample feed consisted of ton containers of HD from which the bulk of the agent was drained for separate incineration in the LIC. The maximum agent-feed rate to the MPF during these tests ranged from 54 to 114 lb/hr.

The incinerator and PAS operating criteria were as follows;

MPF Primary Chamber Temperature	1450 ± 250 °F
MPF Afterburner Exhaust Gas Temperature	2000 + 250, - 100 °F
Oxygen in Afterburner Exhaust	2-1/2 - 14%
Carbon Monoxide (corrected to 7% O_2)	≤100 ppm hourly avg. 200 ppm peak (5 minutes)
Venturi Delta P	5 - 50 in. H_2O
Packed Bed Scrubber	
Scrubber Liquid Flow	≥395 gpm
Packed-bed Delta P	1 - 10 in. H_2O
Scrubber pH	≥7

4.2 CONTINUOUS COLLECTION METHODS

4.2.1 Continuous Emission Monitors (CEMs)

Continuous emission monitors are used at JACADS to determine O_2, NO_x, SO_2 and CO. The monitors are checked for drift and span every 24 hr. The daily checks are included in Appendix E.

4.2.2 Chemical Agent Monitors

The Automatic Chemical Agent Monitoring System (ACAMS) was used to monitor for HD in stack gases. The ACAMS is capable of providing near-real-time monitoring for trace quantities of military chemical agents. Essentially, the ACAMS is a gas chromatograph (GC) that has been equipped with a solid-sorbent sample-collection device and with the circuitry, hardware, and software to permit it to collect and analyze samples automatically. The ACAMS is equipped with a fused-silica GC column, a flame-photometric detector (FPD), a sampling pump, and a small tube packed with a solid-sorbent material. ACAMS units used for stack sampling are interfaced with stack-sampling devices that enable them to sample chemically hostile stack gases. Three ACAMS were used to monitor the stack. These are located at the blower (one) and the exhaust (two, one operating with the other as a standby system). The ACAMS operates in cycles of fixed duration that contain predetermined periods for the collection and the analysis of samples. Functions such as the flow rates of operating gases and the column oven temperatures are also predetermined and controlled by appropriate software. However, the rate at which samples can be collected is manually controlled.

The ACAMS was calibrated and challenged by injecting known amounts of HD into the sampling system and allowing the instrument to complete its sampling/analysis cycle. Instrument responses are displayed on a Gas Plasma Display (GPD) screen on the front of the instrument, on a strip-chart recorder that is part of the ACAMS unit, and in the JACADS control room.

The ACAMS units are calibrated at a minimum of every 30 days or if they fail two consecutive challenges. The instrument is calibrated to the ASC (0.03 mg/m^3) and set to alarm at 0.7 ASC. An additional calibration challenge to the ASC and to the LOQ is performed every 4 hours during operation. Set-points are recalibrated if necessary. ACAMS calibration and challenge data for the MPF trial burn are included in Appendix E.

4.3 MANUAL SAMPLE COLLECTION METHODS

Sampling was performed according to the "Sampling and Analytical Protocol for the Resource Conservation and Recovery Act (RCRA) Trial Burns and the Toxic Substance Control Act (TSCA) Demonstration Test Burn at JACADS" (included as Appendix G). Standard methods were used to collect the samples. A brief description of the methodology that was employed and the samples that were generated is presented within this section.

4.3.1 Modified Method Five (MM5)

Method 0010 from SW-846 was used to collect samples for determinations of semivolatile PICs and dioxins/furans. All train glassware was cleaned with a 1:1 solution of methanol/methylene chloride prior to use. The sample was collected for four hours during the test run. During recovery of samples, all glassware prior to the solid sorbent was rinsed first with toluene, then with methanol/methylene chloride to generate two separate rinse samples. The filter, sorbent, and condensate were then collected, resulting in a total of five fractions for analysis.

4.3.2 Volatile Organic Sampling Train (VOST)

Method 0030 from SW-846 was used to collect samples for volatile organic compound analysis. All of the sorbent tubes and the condensate samples were recovered from the VOST system for laboratory analysis. Several sorbent tubes were included as blank samples for each of the four runs. Each run provided four pairs of stack-sample sorbent tubes, each pair representing approximately 20 L of stack gas. The method employed the slow Volatile Organic Sampling Train (VOST) which runs at 0.5 L/min. No samples were taken during the port changes. Two pairs were collected for 40 minutes each during the first two hours of the test run and two pairs were collected similarly during the last two hours of the test run.

4.3.3 Method Five Acid Train (M5AT)

Method 0050 of SW-846 was used in the collection of samples for the determination of acid gases and particulates. The sample was collected during the first two hours of the test run. Recovery of the probe wash, filter, 2 acidic and 2 caustic impingers generated six samples for analysis.

4.3.4 Multiple Metals Train (MMT)

Collection of samples for the determination of metal analytes and particulates was carried out with a Method 5 train equipped with additional impingers containing appropriate scrubbing solutions. A 72 minute sample was collected during the last two hours of the test run. The resulting nine train fractions were submitted to the laboratory for analysis.

4.3.5 Particle Size Distribution

Particle size distribution measurements were made on the particulate matter in the stack gas with the use of University of Washington (Pilat) Mark V/III cascade impactors. The impactors were fitted with SRI/EPA Right-Angle Precollectors and were operated in situ. The impactor was configured for these tests to provide data in seven size fractions, with stage cut sizes ranging from about 0.25 to about 11 μm. A single particle size sample was obtained over all four of the MPF tests because of the very low particulate concentration in the stack gas. A six point traverse of the stack was made during each test using the same set of collection media each time. The particulate material that was collected was determined gravimetrically. All weighing of the impactor stage and filter catches was done on-site using a Cahn electronic microbalance to a sensitivity of 10 μg.

4.3.6 Orsat

Manual Orsat (EPA Method 3) was used to quantify CO_2 and O_2 for molecular-weight determinations.

4.3.7 Support Methods

EPA Methods 1, 2, and 4 were used for determination of traverse points, velocity profiles, and moisture content as required in all isokinetic sampling efforts. Appendix F details the application of these methods.

4.3.8 Total Hydrocarbons

The average THC, reported as propane, was measured by EPA Method 25A.

4.4 SAMPLE COLLECTION SEQUENCE AND PROCEDURE

4.4.1 Trial Burn Sequence

The sequence of events in carrying out the sampling was as follows:

On Saturday, August 15, the sampling crew setup for a test to begin at 0800. The equipment was checked out and prepared for testing. At approximately 0900 the test was canceled. Trains were then leak checked as part of the requirements for using them as blank trains. The trains were recovered as blanks.

On Monday, August 17, no MPF testing was planned because the first LIC HD demonstration test was scheduled. At 1310 the LIC test was canceled. A meeting was held with EPA to discuss schedule, test plan and duties.

On Tuesday, August 18, the first MPF HD test run was scheduled. MPF cyclonic flow checks were completed at 1045 and the M5 meter box audits for EPA were carried out beginning at 1100. At 1246 the first MPF test began. At 1326 a process problem resulted in a sampling stoppage. Sampling resumed at 1353 and was halted again at 1358. At 1645 the test was aborted and the trains were cleaned up.

On Wednesday, August 19, testing of the LIC was carried out for the first LIC HD Demo test.

On Thursday, August 20, two MPF tests were planned to commence at 0730. At 0730 the LIC still required about one more hour of operation to drain the tanks sufficiently to hold agent from the ton containers for MPF tests. At approximately 0900 the LIC was brought down and blanked off. The first ton container was loaded into the MPF. At 0925 the glassware for the second MM5 run for the day was prepped so as to minimize delays between first an second MPF tests. Pretest sampling around the PAS for the first MPF test began 1100 and stack sampling began at 1123. A feed stoppage resulted in a sampling stoppage at 1354. Sampling restarted at 1635 and the test was completed at 1816. A port change for the HCl train occurred at 1223, for the MM5 train at 1323, and for the metals train at 1708. The second test for this day was aborted at 2015. Sample recovery and custody transfer from the first test were complete at 2130 at which time the samples were removed from the plant site and transferred to the secure storage location.

On Friday, August 21, and Saturday, August 22, tests were conducted on the LIC. The ash residue sampling of the ton containers from the MPF test on August 20 was also carried out on the 21st. The first shipment of samples for analysis was made on Saturday, August 22.

On Sunday, August 23, work began at 0600 with two MPF tests planned for the day. The first test of the day, the second of the four planned MPF tests, began at 1000 and continued without problems to its completion at 1423. A port change for the HCl train occurred at 1100, for the MM5 at 1200, and for the metals train at 1326. The port test samples for the first test were used as the pretest sample for the second test of the day. The third MPF test began at 1513 and sampling was stopped at 1543 because of a plant operational problem. Sampling resumed at 1554 and was stopped a second time at 1559. Sampling resumed again at 1610 and continued without further interruptions other than for the port change until completion at 1944. A port change for the HCl train occurred at 1613, for the MM5 at 1735, and for the metals train at 1921. Sample recovery and custody transfer was complete at 2115 and the samples were removed from the plant site to the secure storage site at 2130.

Monday, August 24, and Tuesday, August 25, were devoted to more testing of the LIC. The ash residue sampling from the ton containers from the second and third MPF tests was done on August 24 as well. A second shipment of samples was made on Monday as well.

On Wednesday, August 26, the fourth MPF test was conducted. Stack sampling began at 1041 and continued uninterrupted except for the port changes until completion at 1450. A port change for the HCl train occurred at 1141, for the MM5 at 1241, and for the metals train at 1358. After recovery was completed all samples not previously shipped, including those from this test, were packed for shipment on Thursday, August 27. All work for the day was completed at 2030. Packing of equipment for departure was done and restoration and cleanup of the lab and recovery area was begun.

On Thursday, August 27, the final MPF ton container residue sampling took place, the final weighing of the particle size samples was carried out, and all remaining samples were shipped for analysis. The final cleanup and storage of supplies and reagents was completed and the sampling crew departed as couriers on the flight with the samples.

4.4.2 Sample Collection Procedure

Samples of 5-min duration for the particulate matter and for HCl were taken isokinetically at each traverse point with an EPA-type heated, glass-lined probe (M5AT). Samples of 3-min duration for the particulate matter and for heavy metals were also taken isokinetically at each traverse point with an EPA-type heated, glass-lined probe (MMT). Finally, semivolatile samples of 10-min duration were taken isokinetically at each traverse point with an EPA-type heated, glass-lined probe (MM5).

Each sampling train was leak-checked at the nozzle (at 15 in. of mercury vacuum) before each test, during port change, during component change, and again leak-checked at the nozzle after each test at the highest vacuum reading recorded during the test. A leak criterion of "not greater than 0.1 in. of mercury in 2 min" was used. Pretest leaks were corrected prior to the start of sampling. The lines were also checked for clearance, and the console manometer was zeroed before each test run. The pitot-tube lines were checked for leaks before and after each test run. The method was modified to preclude the collection of moisture in the pitots. After each pressure reading, a three-way valve was utilized to clean moisture from the pitot tubes.

In summary, most stack sampling was conducted simultaneously. The M5AT sampling process concluded somewhat before the midpoint of the overall test period, and the MMT sampling process started at the beginning of the third hour of sampling.

The samples that were collected for analysis included those needed for determining:

a. Particulate concentration in the stack gas: two samples per test (M5AT and MMT).

b. HCl concentration in the stack gas: one sample per test (M5AT).

c. Selected metals in stack emissions in the stack gas: one sample per test (MMT).

d. Volatile and semivolatile organic emissions in the stack gas (MM5 and VOST).

e. CO_2 in the stack gas (Orsat).

f. Particle size sampling in the stack gas: one sample over the entire course of the four tests.

The following were monitored:

a. NO_x in the stack gas.

b. CO and O_2 at the afterburner.

c. Total hydrocarbons in the stack gas.

d. SO_2 in the stack gas.

e. O_2 in the Primary Chamber exhaust gas.

f. Agent (HD) in the stack and in the discharge air lock.

In addition, the following media were sampled:

a. PAS brine sampled at beginning and end of each test from the outlet of the PAS loop pumps.

b. Caustic makeup sampled at beginning and end of each test from a tap in the feed line.

c. Process feed water sampled at the beginning and end of each test from a tap in the feed line.

d. Fuel oil from Valve 332 on the tank.

e. Scrubber liquor sampled at the beginning and end of each test from the outlet of the PAS loop pumps.

f. Metals and organics in the ton container residue (ash).

Prior to being shipped off site, all samples are tested by the JACADS laboratory and certified to contain less than the drinking water standard for agent.

4.4.3 Sampling Contingency Plan

The following contingency plans were adopted and used in these tests:

Upset conditions in the incinerator, such as the loss of a key monitor, an agent alarm, or any non-steady-state incinerator condition, will result in a feed stoppage. Sampling operations will be affected by the upset condition as defined below:

Upset of 30 or less minutes	Stop trains in stack
Upset greater than 30 minutes	Remove and cap trains
Upset greater than 2 hours	Stop test run
Cumulative feed stop of 2 hours	Stop test run unless otherwise directed by EPA

Leak checks must be performed when trains are removed from the stack; if leaks are found, the test run must be terminated.

4.5 ANALYSIS

The procedures that were used for preparing and analyzing samples are described briefly in this section. The test plan in Appendix G also describes the analytical methods. The methods were based on standard EPA procedures, which are referenced below according to method number. Any deviations from the standard methods are documented with supporting QA/QC results.

4.6 ANALYSIS SUMMARIES

4.6.1 Semivolatile Organics Analysis

4.6.1.1 Extractions

The XAD-2 sorbent cartridges for the MM5 were prepared according to SW-846 Method 0010. The sorbent cartridges were spiked with 1,2-dichlorophenol-d_3, 1,2,4-trichlorobenzene-d_3, and of 2,3,7,8-tetrachlorodibenzo-p-dioxin-$^{37}Cl_4$ prior to shipment to the field.

MM5 samples were extracted from the sorbent cartridges according to SW-846 Method 3540. The XAD-2 sorbent cartridges and filters were spiked with PCDD/F isotope-dilution standards, which consisted of the following fourteen $^{13}C_{12}$-labeled compounds: 2,3,7,8-TCDF, 1,2,3,7,8-PeCDF, 2,3,4,7,8-PeCDF, 1,2,3,4,7,8-HxCDF, 1,2,3,6,7,8-HxCDF, 1,2,3,7,8,9-HxCDF, 1,2,3,4,6,7,8-HpCDF, 1,2,3,4,7,8,9-HpCDF, 2,3,7,8-TCDD, 1,2,3,7,8-PeCDD, 1,2,3,4,7,8-HxCDD, 1,2,3,6,7,8-HxCDD, 1,2,3,4,6,7,8-HpCDD, and OCDD. In addition, the base-neutral-acid surrogates, which consisted of phenol-d_6, 2-fluorophenol, nitrobenzene-d_5, 2-fluorobiphenyl, 2,4,6-tribromophenol, and terphenyl-d_{14}, were also added. The substances of interest that were collected in all sorbent and filter samples were Soxhlet-extracted, and liquid-impinger samples were subjected to liquid-liquid extraction by SW-846 Method 3510. The filter and front wash from each train were combined and the resin and back half of each train were combined to make two separate samples from each MM5 train. Each of the resulting samples was concentrated to 10 mL, of which 1 mL was allotted for the determination of semivolatile organics and 9 mL for determination of PCDD/F.

Aqueous samples (PAS brine, caustic makeup, feed water) were treated for extraction by the liquid-liquid extraction method given in SW-846 Method 3520. That is, about 500 mL of each sample was placed in a continuous liquid-liquid extractor, pH-adjusted to greater than 11 (if necessary), and spiked with the chlorinated organic surrogates and with the PCDD/F isotope-dilution standards. The sample was then treated by extraction with methylene chloride for 18 to 24 hr. The methylene chloride was removed, the pH of the sample adjusted to less than 2, and the sample again subjected to extraction for an additional 18 to 24 hr with another 500 mL of methylene chloride. Each of the resulting samples was concentrated to 10 mL and split to allow the analysis of semivolatile organics on 1 mL of the sample and PCDD/Fs on 9 mL of sample.

Samples for PCDD/F analysis were cleaned up according to Method 8290. No further cleanup was performed on the portion of the sample reserved for the determination of semivolatile organics. The PCDD/F extract was partitioned against 20% aqueous KOH, 5% aqueous NaCl, several portions of concentrated H_2SO_4, and 5% aqueous NaCl (in that order). The extract was spiked with the clean-up standard ($^{37}Cl_4$-2,3,7,8-TCDD), unless the extract was from XAD-2 cartridge which had been spiked with this compound before being shipped to the field. The sample was evaporated to 2 mL and eluted through an alumina column (Woelm Super 1). The fraction obtained from the 60% methylene chloride/40% hexane (v/v) eluent was found to contain the components of interest, and this fraction was used for further cleanup and analysis. All samples were also cleaned up with an AX-21 carbon column. The toluene fraction was reduced to 1 mL and spiked with isotopically labeled internal standard $^{13}C_{12}$ compounds: 1,2,3,4-TCDD and 1,2,3,7,8,9-HxCDD. The toluene fraction was reduced to 20 μL and the solvent exchanged with nonane

before the sample was subjected to analysis by High Resolution Gas Chromatography/High Resolution Mass Spectometry (HRGC/HRMS).

The fuel-oil samples for PCDD/F analyses were prepared by weighing 2 g of each sample into a 10-mL volumetric flask, adding the PCDD/F isotope-dilution standards, diluting the sample to 25 mL with hexane and cleaning the sample by the above method. The fuel-oil samples for semivolatile organic analysis were prepared by diluting 10 μL fuel oil to 10 mL with methylene chloride.

4.6.1.2 Analytical Procedures for Determining Semivolatile Organics

4.6.1.2.1 Polychlorinated Dibenzo-p-dioxins and Polychlorinated Dibenzofurans

Samples designated for PCDD/F analyses were analyzed by HRGC/HRMS according to EPA Method 8290.

Fourteen (instead of nine) isotopically labeled internal standards (isotopically labeled analogues of the seventeen target compounds except for 2,3,4,6,7,8-HxCDF; 1,2,3,7,8,9-HxCDD; an octachlorofuran), two isotopically labeled recovery standards ($^{13}C_{12}$-1,2,3,4-TCDD and $^{13}C_{12}$-1,2,3,7,8,9-HxCDD), and one isotopically labeled cleanup standard ($^{37}Cl_4$-2,3,7,8-tetrachlorodibenzo[1,4]dioxin) were used. The cleanup standard was spiked into XAD-2 resin used in the field (field spike) or into the concentrated extract prior to cleanup (cleanup standard) for all other samples. Five-level calibration curves were generated with the use of the 17 target PCDFs and PCDDs specified by Method 8290. The lowest concentrations corresponded to 0.02 ng of TCDD or TCDF; 0.10 ng of PeCDD, PeCDF, HxCDD, HxCDF, HpCDD, or HpCDD; and 0.20 ng of OCDD and OCDF in 20 μL of solution.

The samples were also analyzed for total TCDFs, total TCDDs, total PeCDFs, total PeCDDs, total HxCDFs, total HxCDDs, total HpCDFs, and total HpCDDs. SW-846 Method No. 8290 was used except that 14 (instead of 9) isotopically labeled internal standards, 2 isotopically labeled recovery standards, and 1 isotopically labeled cleanup standard were used.

Five-point calibration curves were generated for the components. The calibration curves for 2,3,7,8-TCDF and 2,3,7,8-TCDD covered the range from 0.02 to 4 ng; the curves for the 2,3,7,8-PeCDFs, 2,3,7,8-PeCDDs, 2,3,7,8- HxCDFs, 2,3,7,8-HxCDDs, 2,3,7,8-HpCDFs, and 2,3,7,8-HpCDDs extended from 0.10 to 20 ng; and the curves for OCDF and OCDD extended from 0.2 to 40 ng in 20 μL of solution.

The GC/MS analysis conditions are given below:

Instrument:	VG 70S GC/MS equipped with HP 5890 GC
Column:	J&W DB-5, 60 m x 0.32-mm ID, 0.25-μm film
Column Temp:	100°C hold 2 min, then ramp to 180°C at 20°C/min, hold 1 min, then ramp to 220°C at 5°C/min, hold 14 min, then ramp to 300°C at 5°C/min, hold 7 min
Carrier Flow:	He at 1.5 mL/min
Injector Temp:	275°C

Interface Temp:	215°C
Injection Volume:	2 μL
Data System:	VG 11/250J

4.6.1.2.2 Base-Neutral-Acid Analysis

The MM5 samples, as well as the process liquid and fuel oil samples, were analyzed for base-neutral-acid compounds by Method 8270. Compounds that were analyzed included the target list from the test plan as well as nontarget compounds that were present at high levels. The spectra are retained in the files. The fuel-oil samples were diluted before analysis because of the high levels of semivolatile compounds that occurred naturally in the fuel oil and that interfered with the analysis. Internal standards were added immediately before analysis by GC/MS. The GC/MS conditions are given below:

Instrument:	HP 5971 GC/MS equipped with HP 5890 GC
Column:	HP-5, 60 m x 0.32-mm ID, 0.25-μm film
Column Temp:	45°C hold 3 min, then ramp to 300°C at 8°C/min, then hold
Carrier flow:	He at 1 mL/min
Injector Temp:	270°C
Interface Temp:	280°C
Injection Volume:	1 μL
Data System:	HP DOS

4.6.2 Volatile Organics Analysis

Stack gases were analyzed for VOAs by SW-846 Methods 5040 and 8260 with the 8240 compound list. Thus, the analyses were based on VOST sampling and GC/MS analysis. MPF incinerator residues were analyzed for VOAs by SW-846 Method 8260 with the 8240 list. Compounds that were analyzed included the target list from the test plan as well as nontarget compounds that were present at high levels. The spectra are retained in the files. All analyses were by GC/MS.

4.6.2.1 VOST Analysis

VOST tubes were analyzed for volatile organics by SW-846 Method 5040 with VOST sampling, and VOST condensates and aqueous process samples were analyzed by SW-846 Method 8260 with the 8240 compound list.

VOST tubes were purchased from Research Triangle Laboratory. The packed tubes were conditioned at approximately 180°C for a minimum of 16 hours with prepurified nitrogen flowing through them. Two sets of tubes from each batch were then analyzed to confirm that no interfering compounds were present. The tubes were sealed and stored at 4°C or below until use.

Internal standards and surrogates were added to all samples immediately prior to analysis by GC/MS. The volatile internal standards were bromochloromethane, 1,4-difluorobenzene, and chlorobenzene-d_5; each was added in the amount of 0.25 μg to VOST tubes, condensates, and aqueous process samples. Volatile surrogates were toluene-d_8, 1,2-dichloroethane-d_4, and 4-bromofluorobenzene (BFB); each was added in the amount of 0.25 μg to all samples. Although BFB was added to VOST samples, the high boiling point of this compound makes it a poor choice as a surrogate for VOST analysis.

The GC/MS conditions are given below:

Purge and Trap:	Tekmar LSC-2, Trap OV-1/Tenax/Silica Gel/Charcoal
Purge:	11 min
Desorb Temperature:	200°C
Desorb Time:	4 min
GC:	HP 5890 Series II
Column:	30 m x 0.53 mm ID, 3.0 μm, DB624
Program:	46°C hold 5 min, then ramp to 140°C at 6°C/min
MS:	HP 5971 MSD
Scan:	35 to 260 amu at 4 sec/scan
Source Temperature:	200°C
Interface:	Jet separator, 250°C

4.6.3 Anions Analysis

The MSAT samples were analyzed for chloride and fluoride, whereas the process samples were analyzed for chloride, fluoride, sulfate and phosphate.

The ion-chromatography conditions are listed below:

Instrument:	Dionex DX-100 with conductivity detection
Column:	Ion Pac AS-4A
Eluent:	0.75 mM sodium bicarbonate/2.0 mM sodium carbonate
Flow Rate:	2.0 mL/min
Injection Volume:	100 μL

4.6.4 Metals Analysis

The MMT and TCLP metals other than mercury were determined by inductively coupled plasma atomic-emission spectrometry (ICP) according to SW-846 Method No. 6010. These analyses were performed on a Perkin-Elmer Plasma 40 or Plasma 400 Emission Spectrometer. Samples were prepared for analysis as set forth in SW-846 Method No. 3010, which involves acid digestion. The ICP wavelengths that were used are listed below.

Metal	Wavelength, nm
Arsenic	193.696
Selenium	196.026
Chromium	205.552
Antimony	206.833
Zinc	213.856
Cadmium	214.438
Phosphorus	214.914
Lead	220.353
Nickel	231.604
Barium	233.527
Boron	249.773
Manganese	257.610
Vanadium	292.402
Beryllium	313.042
Silver	328.068
Thallium	276.8
Tin	189.980
Cobalt	230.786
Copper	324.754

Mercury was determined in TCLP and MMT samples by cold-vapor atomic-absorption spectrometry at 253.7 nm (SW-846 Method No. 7470) with an Instrumentation Laboratory Model IL551 AA/AE Spectrometer equipped with a Model 440 Atomic Vapor assembly. Thallium was analyzed by graphite furnace atomic absorption spectrometry at 276.8 nm (SW-846 Method No. 7841) with a Perkin-Elmer Model 3100 Spectrometer.

4.6.5 pH Measurements

The pH levels of the liquid-process samples were measured prior to the analyses of these samples for other parameters. The pH values were determined by combination glass electrode (with internal reference electrode) according to SW-846 Method 9040.

4.6.6 Particulates

Particulates were quantified in the acetone-probe rinse and in the filters from the MMT and the acid train. These samples were dried to a constant weight in a desiccator and weighed with an analytical balance to ±0.1 mg.

5.0 TEST RESULTS

5.1 INTRODUCTION

The test results for the MPF HD Trial Burn describe the MPF process characteristics, the primary chamber and afterburner operating characteristics and operating parameters, the nature of the stack emissions and the chemical content of the solid residue. These results allow calculation of RCRA required parameters such as DRE for the POHC, HD concentrations in the stack, particulate emissions, HCl emissions, CO concentrations in the stack and the concentration of certain metals in the process residue. Additionally, data are available from the monitoring of stack emissions for O_2, CO_2, PICs, PCDD/F and metals. Additional data are available from the analysis of process samples (process water, scrubber liquor, scrubber brine and caustic) for PICs, PCDD/F, F^-, Cl^-, PO_4^{-3} and SO_4^{-2}.

5.2 PROCESS DATA

5.2.1 Process Data Acquisition and Recording

Process conditions for the four test runs are summarized in Tables 5-1 and 5-2. The data were compiled from PDAR System records and manual stack sampling logs. The data indicate that the required temperature conditions, as specified in the RCRA permit application, were maintained throughout the runs.

The CO concentration data in the PDAR log were not the raw measurements but were, instead, the values obtained after correction of the measurements to a 7% oxygen concentration. CO was found to range from 0.0 to 20.0 ppm. The maximum hourly rolling average was 18.0 ppm. These values are well below the required limits of 100 ppm for the hourly rolling average and 200 ppm peak for five minutes. Figures 5-1 through 5-4 show how the O_2 and CO concentrations, and gas temperatures varied during Test Run 4. These are presented as examples only. Complete data for all four test runs are included in the appendices.

5.2.2 Orsat

Hourly Orsat data are presented in Table 5-3. Nitrogen concentration was not part of the Orsat data, but was obtained by difference.

5.2.3 Chemical Agent Feed Rate

The agent feed rate to the MPF is a function of the quantity remaining in each container and the container processing rate.

Because of the "batch" nature of the agent feed into the MPF, it can not be validly described by an average rate. A different approach, suggested by EPA personnel, was used. Feed rate is described as an instantaneous evaporation rate which is the summation of the individual rates for each container then resident in the primary chamber. Section 5.10 provides additional detail describing this approach, as well as a discussion of its application to calculation of DRE.

TABLE 5-1 MPF PDAR DATA

ID	Parameter	Max	Test Run #1 Min	Average	Max	Test Run #2 Min	Average	Max	Test Run #3 Min	Average	Max	Test Run #4 Min	Average
24-AIT-75	PAS-Stack-102 SOx (ppm)	4.0	1.0	2.1	6.0	5.0	5.2	5.0	4.0	4.9	46.0	20.0	30.4
24-AIT-76	PAS-Stack-102 NOx (ppm)	54.0	21.0	44.1	46.0	16.0	31.9	32.0	10.0	26.0	30.0	0.0	22.0
14-PIT-11	MPF Furnace Pressure (in. WC)	-1.0	-2.0	-1.8	-1.6	-2.2	-1.8	-1.2	-2.2	-1.8	-1.1	-2.2	-1.8
24-AIT-284	MPF PAS CO Analyzer (ppm)	19.0	10.0	16.0	20.0	13.0	17.8	19.0	13.0	17.8	19.0	11.0	17.1
24-TIT-509	Quench Tower Outlet Temperature (F)	180.4	171.7	176.0	176.2	166.9	171.3	177.3	165.0	171.7	187.4	174.6	178.3
24-AIT-224B	MPF Venturi Scrubber PH (PH)	9.8	9.3	9.5	9.8	9.7	9.8	10.0	9.8	9.6	9.6	9.1	9.4
24-PDIT-225	PAS-SCRB-101 Differential Pressure (in. WC)	7.4	3.8	4.9	7.3	3.6	5.4	7.3	4.4	5.5	6.0	4.2	5.2
24-AIT-247	Clean Liquor to SCrubber Tower PH (PH)	9.2	8.9	9.1	9.9	7.2	8.6	8.8	7.6	8.5	8.5	8.2	8.4
24-PDIT-291	PAS-DMS-103 Differential Pressure (in. WC)	1.8	1.3	1.5	1.8	1.4	1.6	1.8	1.5	1.8	1.7	1.5	1.6
24-AIT-518	MPF PAS Exhaust O2 Analyzer (%)	19.4	12.8	14.5	19.4	13.2	14.8	19.3	13.8	14.6	18.9	12.8	13.8
14-TIC-152	Zone 1 Temperature (F)	1658.0	1208.0	1407.8	1641.0	1027.0	1426.9	1567.0	1262.0	1417.5	1613.0	1275.0	1457.4
14-TIC-141	Zone 2 Temperature (F)	1675.0	1394.0	1458.4	1667.0	1362.0	1453.3	1649.0	1390.0	1460.0	1742.0	1379.0	1460.6
14-TIC-153	Zone 3 Temperature (F)	1474.0	1422.0	1448.8	1478.0	1409.0	1448.9	1476.0	1414.0	1448.3	1485.0	1383.0	1450.6
14-TIC-86	Afterburner Temperature (F)	2047.0	1911.0	2003.1	2060.0	1933.0	2003.1	2034.0	1961.0	2002.5	2064.0	1958.0	1998.4
14-AIC-82	Afterburner Exhaust Oxygen (%)	15.2	6.9	9.9	15.3	7.0	10.0	16.4	7.5	9.5	17.2	7.5	9.4
24-AIC-247	Clean Liquor to Scrub Twr PH (PH)	8.3	6.1	6.3	8.2	6.6	7.8	8.0	6.7	7.8	8.4	7.3	8.1
24-FIC-248	Clean Liquor to Scrubber Twr Flow (gpm)	634.0	606.0	619.3	633.0	602.0	619.3	634.0	605.0	619.0	632.0	605.0	619.2
14-PIC-70	MPF Afterburner Pressure (in. WC)	-1.2	-3.2	-2.0	-1.3	-2.4	-2.0	-1.5	-2.3	-2.0	-1.4	-2.4	-2.0
24-FIC-217	Brine to MPF Quench Tower Flow (gpm)	91.1	88.6	89.9	92.0	88.9	89.9	96.3	84.2	89.9	91.6	85.1	88.4
24-FIC-218	Brine to MPF Venturi SCrubber Flow (gpm)	176.6	173.0	174.0	176.2	173.4	174.0	176.6	171.2	174.0	176.8	173.4	174.0
24-PDIC-222	MPF Venturi Scrubber DP (in. WC)	32.7	26.4	30.0	33.6	26.6	30.1	32.3	27.7	30.0	32.6	26.1	30.0
24-AIC-224	Brine PH (PH)	9.7	8.6	8.8	9.4	9.2	9.3	9.6	9.2	9.3	9.5	7.2	8.7
14-AIA-394	MPF CO One Hour Rolling Average (ppm)	18.0	9.0	13.0	17.0	8.0	12.7	3.0	1.0	2.0	0.0	0.0	2.1

J:\HOME\88873\JACADS\mpH.WK1

TABLE 5-2

MPF PROCESS DATA FROM MANUAL STACK SAMPLING[a]

	Test Run			
	1	2	3	4
Gas Flow, acfm	11338	11918	11801	11772
Gas Flow, dscfm	6002	6333	6150	6121
Gas Temperature, °F	189	190	190	191
Percent Moisture	35.0	34.5	35.7	35.8
Percent O_2 (dry)	14.5	14.8	14.5	14.2
Percent CO_2 (dry)	4.5	4.3	4.5	4.9
Total Gas Flow, lb/hr	36355	38175	37585	37478
Dry Gas Flow, lb/hr	27338	28824	28020	27936

[a]Averages of M5AT, and M5MMT results.

Figure 5-1
MPF Test Run #4
Rolling Hourly CO Conc. Vs. Time

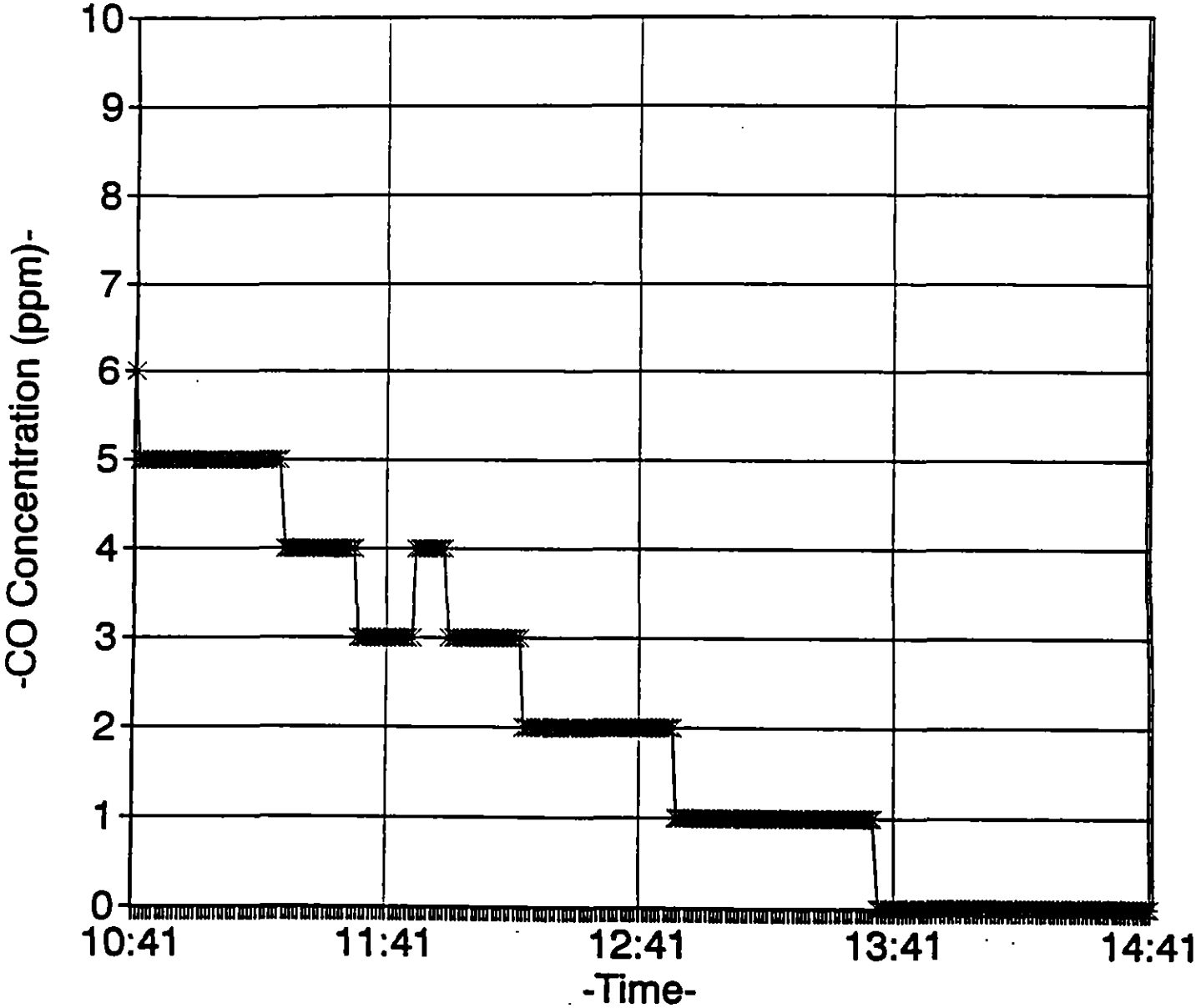

Figure 5-2
MPF Test Run #4
Oxygen in Afterburner Exhaust Vs. Time

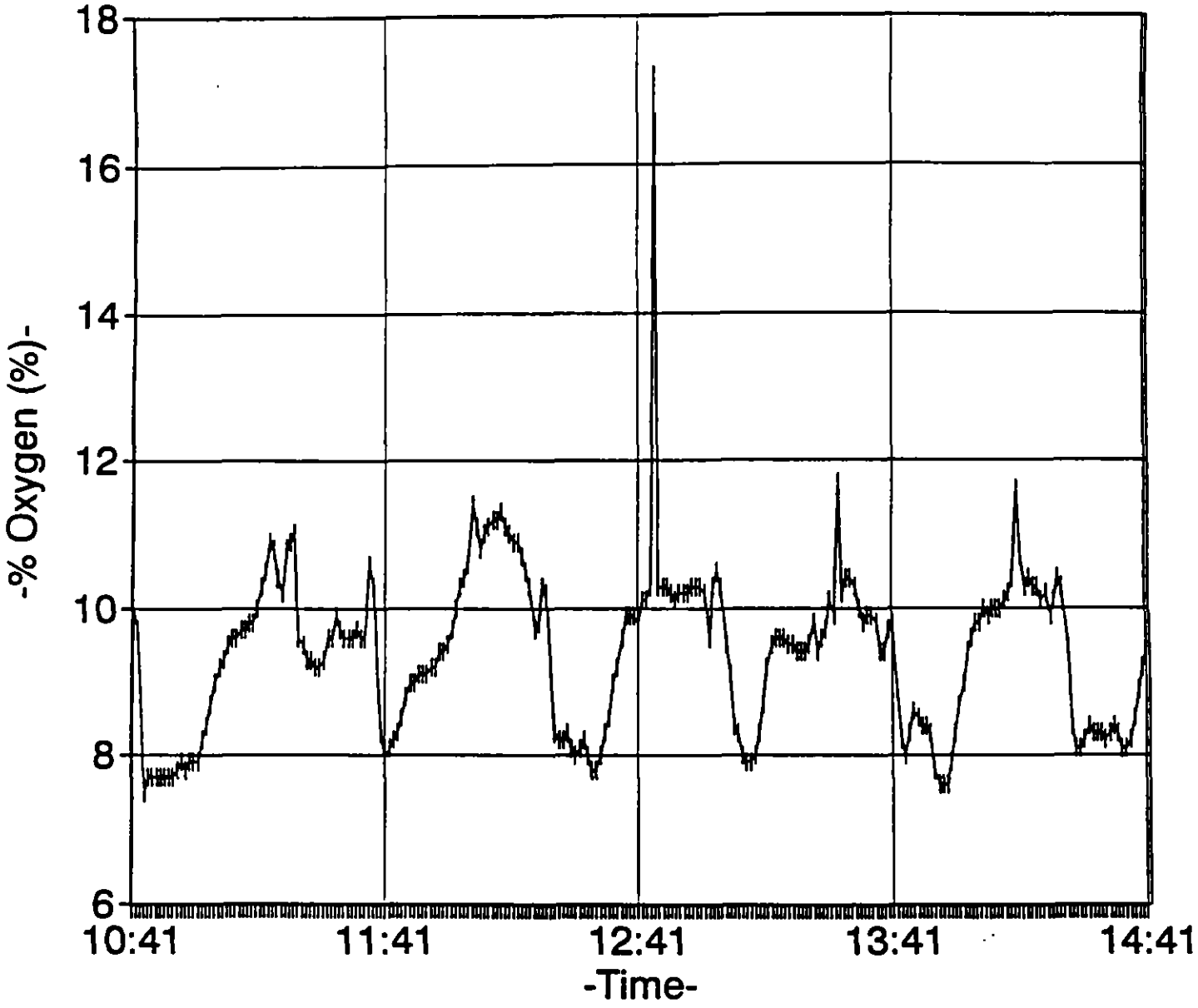

Figure 5-3
MPF Test Run #4
Zone 2 Temperature Vs. Time

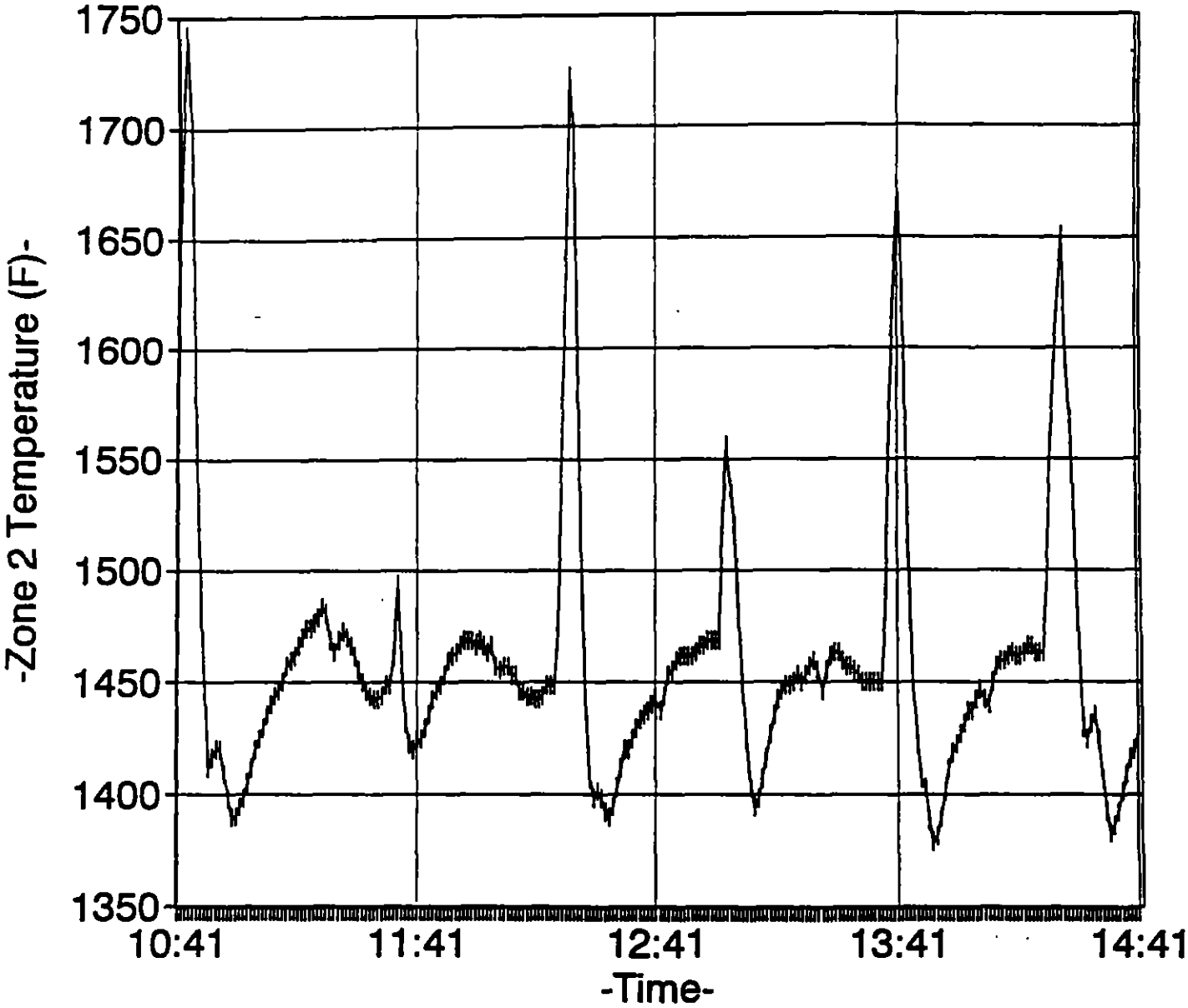

Figure 5-4
MPF Test Run #4
Afterburner Temperature Vs. Time

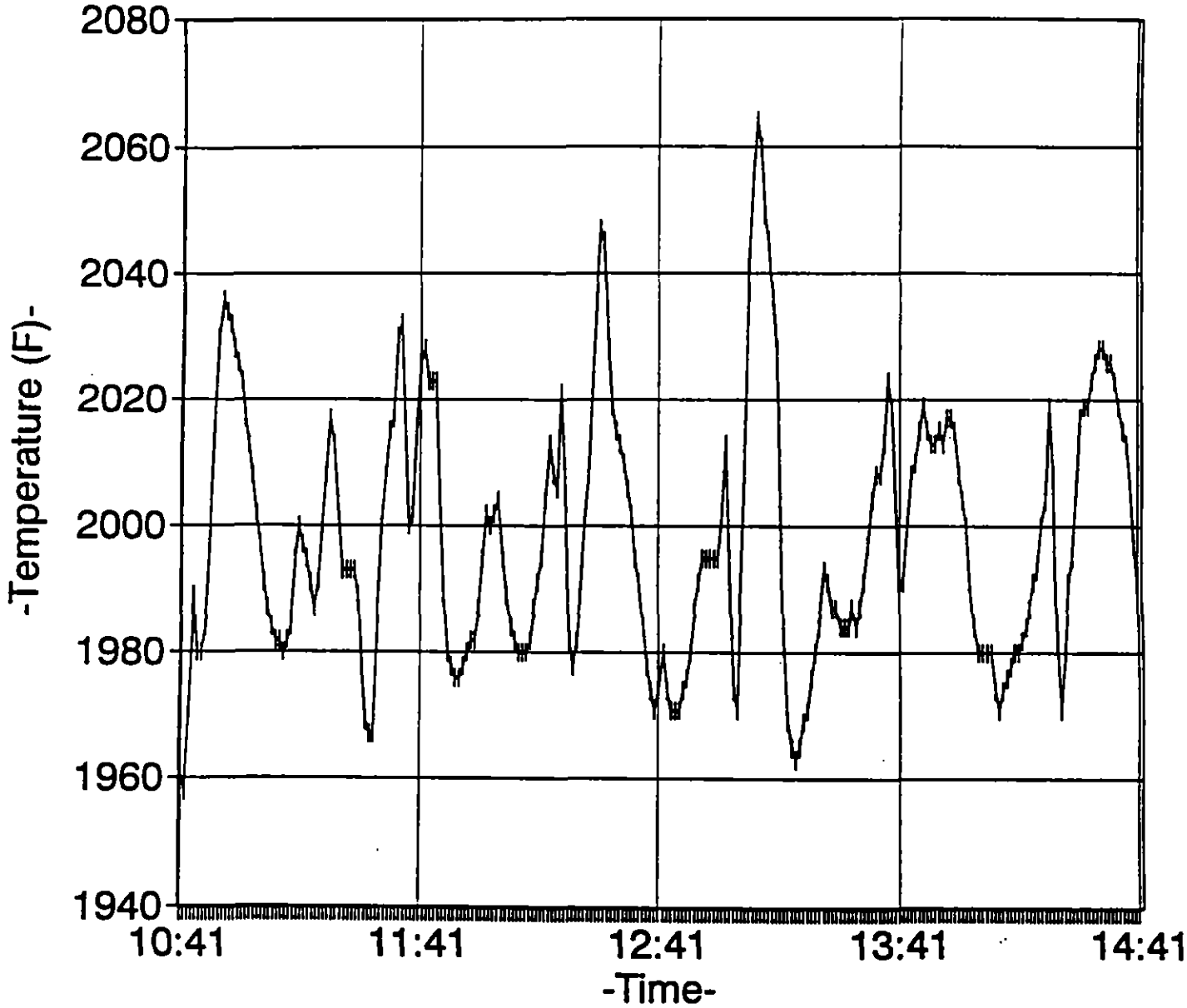

TABLE 5-3

MPF INTEGRATED ORSAT STACK DATA

Date	Time	Carbon Dioxide (% Vol.)	Oxygen (% Vol.)	Nitrogen[a] (% Vol.)
8/20/92	1120 - 1223	4.6	14.3	81.1
	1223 - 1323	4.7	14.3	81.0
	1323 - 1651	4.4	14.6	81.1
	1651 - 1751	4.4	14.6	81.0
	1751 - 1816	4.4	14.6	81.1
8/23/92	1000 - 1100	4.1	14.9	81.0
	1100 - 1200	4.2	14.8	81.0
	1200 - 1300	4.1	14.9	81.0
	1300 - 1400	4.4	14.7	80.9
8/23/92	1520 - 1620	4.5	14.5	81.0
	1620 - 1720	4.4	14.6	81.0
	1720 - 1820	4.5	14.5	81.0
	1820 - 1920	4.6	14.4	81.0
	1920 - 2000	4.6	14.4	81.0
8/26/92	1041 - 1141	4.9	14.3	80.8
	1141 - 1241	4.9	14.4	80.7
	1241 - 1341	5.0	14.0	81.0
	1341 - 1441	4.9	14.2	80.9

[a]Obtained by difference.

Table 5-4 provides the range of agent remaining in the ton containers for each test run and the calculated agent feed rate determined as an evaporation rate.

5.3 RESULTS FROM THE DETERMINATION OF SEMIVOLATILE ORGANICS

5.3.1 General

Operating conditions for the MM5 train are given in Table 5-5.

MM5 samples, process liquid samples, and fuel oil samples were analyzed for semivolatile organic compounds by SW-846 Method 8270. Compounds which were analyzed included the target list from the test plan as well as non-target compounds which were present at high levels. Fuel oil samples were diluted and analyzed without extraction. The dilution was necessary to reduce the extremely high background associated with undiluted samples of this matrix. The mass spectra are retained in SRI files, and all analyses were performed by GCMS. Internal standards were added to all samples immediately prior to analysis by GCMS.

Samples were prepared as described in Method 0010. The MM5 trains were spiked with three acid surrogate compounds and three neutral surrogate compounds for the semivolatile analyses prior to extraction. After extraction the samples were split such that one-tenth of the sample was taken for semivolatile organics analysis and the remaining nine-tenths for PCDD/F analysis. Semivolatile internal standards were added immediately prior to analysis. All compounds and spikes were quantified against the internal standards.

5.3.2 Results

In Table 5-6 are listed the system performance for semivolatile products of incomplete combustion for the MPF. Units are μg/dscm of stack exhaust, with field blank correction applied.

Table 5-7 shows the total mass collected for each sample. Many of the non-target compounds found in the MM5 samples were also present in the lab blanks.

Table 5-8 gives a list of the tentatively identified compounds and their estimated value found in the MM5 blanks and samples.

The results from the analyses of aqueous process samples, and fuel oil samples for semivolatile organic compounds, are given in Tables 5-9 through 5-12. The compounds found most often in the MM5 and process liquid samples were one or more phthalates: Bis(2-ethylhexyl)phthalate and Di-n-octyl phthalate. Both are common industrial and laboratory contaminants. They are also present in the lab blanks. Benzoic acid was found in the scrubber brine samples from all of the test runs. For MM5 train samples the results are given in total mass collected while for aqueous process samples and fuel oil samples the results are reported as concentrations in μg/L. Spectra and estimated amounts of the tentatively identified non-target compounds for the process sample are given in Appendix J.

TABLE 5-4

MPF AGENT HD FEED RATE

	Minimum	Maximum	Average
Test Run 1			
Quantity per Drained Container (lb)	3.1	44.6	12.8
Feed Rate (lb/hr) - EPA Method[a]	NA[b]	54	NA
Test Run 2			
Quantity per Drained Container (lb)	15.9	81.3	51.8
Feed Rate (lb/hr) - EPA Method	NA	114	NA
Test Run 3			
Quantity per Drained Container (lb)	44.6	68.3	58.4
Feed Rate (lb/hr) - EPA Method	NA	111	NA
Test Run 4			
Quantity per Drained Container (lb)	44.6	68.3	60.3
Feed Rate (lb/hr) - EPA Method	NA	105	NA

[a]Calculated from EPA recommended approach for evaporation rate.
[b]NA = Not Applicable.

TABLE 5-5

MODIFIED METHOD 5 TRAIN CONDITIONS AND RESULTS

Parameter	Units	Test Run 1	2	3	4
Date	--	8/20/92	8/23/92	8/23/92	8/26/92
Sample Time	minutes	240	240	240	240
Sample Volume	dscf	177.74	165.80	166.88	142.63
	dscm	5.03	4.69	4.73	4.04
Stack Gas Flow Rate	dscfm	9030	9047	9181	7933
Stack Gas Temperature	°F	198	198	199	199
Stack Gas Moisture	%	34.1	33.9	34.8	36.7
Percent Isokinetic		105.1	97.9	97.1	96.0
Oxygen Concentration[a]	%	14.5	14.8	14.5	14.2
CO_2 Concentration[a]	%	4.5	4.2	4.5	4.9
Leak Checks:					
Pitot Pre Test		pass	pass	pass	pass
Pitot Post Test		pass	pass	pass	pass
Train Pre Test	cfm at	0.001	0.000	0.001	0.000
	in. Hg	17	18	17	17
Train Post Test	cfm at	0.001	0.001	0.001	0.000
	in. Hg	15	17	20	19

[a]Gas composition from Orsat analysis.

TABLE 5-6

MPF SYSTEM PERFORMANCE FOR SEMIVOLATILE PRODUCTS OF INCOMPLETE COMBUSTION

	Test Run			
	1	2	3	4
Sample Volume (dscm)	5.03	4.69	4.73	4.04
Emitted Substances	Concentration[a], μg/dscm			
2-Methylphenol	60	42	35	34
Benzoic acid	34	ND[b]	ND	12
Dimethyl phthalate	9.4	81	6.2	15
Benzyl alcohol	58	22	9.3	ND
Bis(2-ethylhexyl)phthalate	32	ND	ND	ND
3-Methyphenol	2.1	ND	ND	ND

[a]Values blank corrected using the blank train results.
[b]ND = Not detected. Detection limits:

Test Runs 2 and 3	3.2 μg/dscm for Benzoic acid and 2.1 μg/dscm for Bis(2-ethylhexyl)phthalate and 3-Methylphenol
Test Run 4	2.5 μg/dscm for Benzyl alcohol, 3-Methylphenol and Bis(2-ethylhexyl)phthalate

TABLE 5-7

SEMIVOLATILE RESULTS SUMMARY FOR MM5 TRAIN

Sample Description	Sample No.	Target Compound	Amount, μg
BLANK TRAIN			
Filter and Front Wash	H01709	Benzyl alcohol	287
		Bis(2-ethylhexyl)phthalate	89.8
Resin and Back Wash	H01710	Benzyl alcohol	343
		Bis(2-ethylhexyl)phthalate	101
TEST RUN 1			
Filter and Front Wash	H01724	Benzyl alcohol	578
		2-Methylphenol	300
		Bis(2-ethylhexyl)phthalate	131
Resin and Back Wash	H01882	Benzyl alcohol	343
		3-Methylphenol	10.7
		Benzoic acid	169
		Dimethyl phthalate	47.2
		Bis(2-ethylhexyl)phthalate	218
TEST RUN 2			
Filter and Front Wash	H01731	Benzyl alcohol	389
		2-Methylphenol	198
Resin and Back Wash	H01887	Benzyl alcohol	227
		Dimethyl phthalate	382
		Bis(2-ethylhexyl)phthalate	44.1
TEST RUN 3			
Filter and Front Wash	H01732	Benzyl alcohol	331
		2-Methylphenol	167
Resin and Back Wash	H01886	Dimethyl phthalate	29
		Bis(2-ethylhexyl)phthalate	54.6
TEST RUN 4			
Filter and Front Wash	H10734	Benzyl alcohol	261
		2-Methylphenol	136
Resin and Back Wash	H01884	Benzyl alcohol	258
		Benzoic acid	47.4
		Dimethyl phthalate	61.1
		Bis(2-ethylhexyl)phthalate	33.9

TABLE 5-8

SEMIVOLATILE TENTATIVELY IDENTIFIED COMPOUND RESULTS FOR MM5 TRAIN

Sample Description	Tentatively Identified Compound	Retention Time	Estimated Amount (μg)	Est. Stack Gas Conc., μg/dscm
Lab Blank 1	Ethylbenzene	10.38	486	NA[a]
	1,4-Dimethylbenzene	11.02	1478	NA
	Nonane	11.52	836	NA
	Unknown, Aromatic	13.13	1944	NA
	Unknown, Aromatic	13.32	218	NA
	Unknown, Alkylbenzene	17.58	3159	NA
	1,1-(1,2-Ethanediyl)bis-benzene	24.55	159	NA
Lab Blank 2	Unknown, Alkylbenzene	10.87	215	NA
	1,4-Dimethylbenzene	11.02	407	NA
	Nonane	11.52	343	NA
	Unknown, Aromatic	13.13	1039	NA
	Unknown, Alkylbenzene	17.58	2537	NA
Water Blank 3	Unknown, Dimethylcyclohexane	9.99	21.9	NA
	Unknown, Ethyl-methyl-cyclopentane	10.17	13	NA
	Unknown, Hydrocarbon	10.3	21.8	NA
	Unknown, Aromatic	10.83	164	NA
	1,2-Dimethylbenzene	10.97	176	NA
Field Blank Filter and Solvent	Unknown, Alkylbenzene	10.88	404	NA
	Unknown, Dimethylbenzene	11.03	487	NA
	Nonane	11.53	336	NA
	Unknown, Aromatic	13.15	1215	NA
	Unknown, Aromatic	16.42	228	NA
	Unknown, Aromatic	17.53	2490	NA
	1,1-(1,2-Ethanediyl)bis-benzene	24.54	161	NA

[a]NA = Not Applicable to blank samples.

TABLE 5-8 (Continued)

SEMIVOLATILE TENTATIVELY IDENTIFIED COMPOUND RESULTS FOR MM5 TRAIN

Sample Description	Tentatively Identified Compound	Retention Time	Estimated Amount (μg)	Est. Stack Gas Conc., μg/dscm
Field Blank Resin and Water	Unknown, Alkylbenzene	10.82	246	NA[a]
	1,4-Dimethylbenzene	10.97	207	NA
	Unknown, Aromatic	13.09	1554	NA
	Unknown, Aromatic	16.17	78.8	NA
	Unknown, Aromatic	16.42	228	NA
	Unknown, Aromatic	16.79	340	NA
	Unknown, Aromatic	17.42	316	NA
	1,1-(1,2-Ethanediyl)bis-benzene	24.54	129	NA
	Unknown	36.03	172	NA
Trip Blank Resin	Unknown, Hydrocarbon	10.29	16	NA
	Unknown, Hydrocarbon	10.24	18.8	NA
	Unknown, Alkylbenzene	10.83	228	NA
	1,4-Dimethylbenzene	10.96	682	NA
	Nonane	11.52	419	NA
	Unknown, Aromatic	13.13	1119	NA
	Unknown, Alkylbenzene	17.58	1681	NA
	1,1-(1,2-Ethanediyl)bis-benzene	24.64	491	NA
Blank Train Filter and Front Wash	Unknown, Hydrocarbon	10.23	50.2	NA
	Unknown, Alkylbenzene	10.82	792	NA
	Unknown, Dimethylbenzene	10.96	699	NA
	Nonane	11.48	767	NA
	Unknown, Aromatic	13.06	945	NA
Resin and Back Wash	Unknown, Hydrocarbon	10.3	80	NA
	Unknown, Hydrocarbon	10.35	56.7	NA
	Unknown, Alkylbenzene	10.87	1427	NA
	1,4-Dimethylbenzene	11.05	424	NA
	Unknown, Alkane	11.52	805	NA
	Unknown, Aromatic	13.05	721	NA
	Unknown, Hydrocarbon	17.93	139	NA

[a]NA = Not Applicable to blank samples.

TABLE 5-8 (Continued)

SEMIVOLATILE TENTATIVELY IDENTIFIED COMPOUND RESULTS FOR MM5 TRAIN

Sample Description	Tentatively Identified Compound	Retention Time	Estimated Amount (μg)	Est. Stack Gas Conc., μg/dscm
Test Run 1 Filter and Front Wash	Unknown, Alkylbenzene	10.87	347	69.2
	Unknown, Dimethylbenzene	11.02	643	128
	Unknown, Alkane	11.57	603	120
	Unknown, Aromatic	13.14	908	181
	Unknown, Alkylbenzene	17.46	1027	205
	1,1'-(1,2-Ethanediyl)bis-benzene	24.52	86.8	17.3
Test Run 1 Resin and Back Wash	Unknown, Hydrocarbon	10.32	48.4	9.66
	Unknown, Hydrocarbon	10.42	134	26.7
	Ethyl benzene	10.85	398	79.4
	Unknown, Dimethylbenzene	11.04	763	152
	Nonane	11.56	634	126
	Unknown, Aromatic	13.07	572	114
	Unknown, Alcohol	14.53	79.7	15.9
	Unknown, Aromatic	17.63	39.4	7.86
Test Run 2 Filter and Front Wash	Unknown, Hydrocarbon	10.15	38.8	8.27
	Unknown, Alkylbenzene	10.78	527	112
	Unknown, Dimethylbenzene	10.91	369	78.7
	Nonane	11.45	479	102
	Unknown, Aromatic	13.04	667	142
Resin and Back Wash	Unknown, Hydrocarbon	9.89	1586	338
	Unknown, Hydrocarbon	10.06	1643	350
	Unknown, Alkylbenzene	10.43	1894	404
	Unknown, Dimethylbenzene	10.62	1840	392
	Nonane	11.22	794	169
	Unknown, Aromatic	12.85	553	118
	Unknown, Aromatic	17.89	67.9	14.5

TABLE 5-8 (Continued)

SEMIVOLATILE TENTATIVELY IDENTIFIED COMPOUND RESULTS FOR MM5 TRAIN

Sample Description	Tentatively Identified Compound	Retention Time	Estimated Amount (μg)	Est. Stack Gas Conc., μg/dscm
Test Run 3 Filter and Front Wash	Unknown, Hydrocarbon	10.28	71.8	15.3
	Unknown, Alkylbenzene	10.85	357	76.2
	Unknown, Dimethylbenzene	10.99	772	165
	Unknown, Alkane	11.54	682	146
	Unknown, Aromatic	13.07	657	140
Resin and Back Wash	Unknown, Hydrocarbon	9.7	6.08	1.30
	Unknown, Alkylbenzene	10.24	78.4	16.7
	Unknown, Dimethylbenzene	10.44	89.5	19.1
	Unknown, Aromatic	12.79	11.6	2.78
	Unknown, Hydrocarbon	27.8	5.3	1.13
	Hexadecanoic Acid	30.64	12.9	2.76
	Unknown, Hydrocarbon	32.4	17.0	3.64
	Unknown, Hydrocarbon	32.8	5.99	1.28
	Unknown, Hydrocarbon	39.6	6.71	1.44
	Unknown, Hydrocarbon	41.0	5.99	1.28
	Unknown, Hydrocarbon	41.7	35.3	7.55
Test Run 4 Filter and Front Wash	Unknown, Hydrocarbon	10.3	65.4	16.2
	Unknown, Alkylbenzene	10.84	438	108
	Unknown, Dimethylbenzene	11.01	884	219
	Nonane	11.53	709	176
	Unknown, Hydrocarbon	13.06	638	158

TABLE 5-8 (Continued)

SEMIVOLATILE TENTATIVELY IDENTIFIED COMPOUND RESULTS FOR MM5 TRAIN

Sample Description	Tentatively Identified Compound	Retention Time	Estimated Amount (μg)	Est. Stack Gas Conc., μg/dscm
Resin and Back Wash	Unknown, Hydrocarbon	10.28	61.1	15.1
	Unknown, Aromatic	10.59	1057	262
	Unknown, Alkylbenzene	10.85	442	109
	Unknown, Dimethylbenzene	11.02	786	195
	Nonane	11.54	645	160
	Unknown, Aromatic	13.05	520	129
	Unknown, Hydrocarbon	17.15	28.6	7.09
	Unknown, Aromatic	17.64	32.7	8.10

TABLE 5-9

MPF PROCESS SAMPLES
SEMIVOLATILE RESULTS SUMMARY
TEST RUN 1

Sample ID	Sample No.	Compound	Concentration µg/L
Scrubber Brine Pre Test	(H01798)	Benzoic acid	1460
		2-Nitroaniline	30.3
		Bis(2-ethylhexyl)phthalate	157
Scrubber Brine Post Test	(H01799)	Benzoic acid	1590
		Bis(2-ethylhexyl)phthalate	79.6
Scrubber Liquor Pre Test	(H01800)	Bis(2-ethylhexyl)phthalate	178
Scrubber Liquor Post Test	(H01801)	Bis(2-ethylhexyl)phthalate	266
Process Water Pre Test	(H01803)	Bis(2-ethylhexyl)phthalate	2120
Process Water Post Test	(H01804)	Bis(2-ethylhexyl)phthalate	2080
Caustic Pre Test	(H01794)	Bis(2-ethylhexyl)phthalate	384
		Di-n-octylphthalate	41.6
Caustic Post Test	(H01797)	Bis(2-ethylhexyl)phthalate	494
Fuel Oil Pre Test	(H01907)	--	ND[a]
Fuel Oil Post Test	(H01908)	--	ND
MPF Ash	(H01870)	--	ND

[a]ND = Not detected.

TABLE 5-10

MPF PROCESS SAMPLES
SEMIVOLATILE RESULTS SUMMARY
TEST RUN 2

Sample ID	Sample No.	Compound	Concentration µg/L
Scrubber Brine Pre Test	(H01895)	2-Nitrophenol	27.8
		Benzoic acid	368
Scrubber Brine Post Test	(H01771)	Benzoic acid	423
Scrubber Liquor Pre Test	(H01788)	Bis(2-ethylhexyl)phthalate	78.4
		Di-n-octylphthalate	141
Scrubber Liquor Post Test	(H01789)	Di-n-octylphthalate	86.8
Process Water Pre Test	(H01784)	Di-n-octylphthalate	52
Process Water Post Test	(H01785)	Bis(2-ethylhexyl)phthalate	438
		Di-n-octylphthalate	99.7
Caustic Pre Test	(H01774)	--	ND[a]
Caustic Post Test	(H01777)	--	ND
Fuel Oil Pre Test	(H01909)	--	ND
Fuel Oil Post Test	(H01901)	--	ND
MPF Ash	(H01871)	--	ND

[a]ND = Not detected.

TABLE 5-11

MPF PROCESS SAMPLES
SEMIVOLATILE RESULTS SUMMARY
TEST RUN 3[a]

Sample ID	Sample No.	Compound	Concentration µg/L
Scrubber Brine Pre Test	(H01771)[a]	Benzoic Acid	423
Scrubber Brine Post Test	(H01810)	Benzoic acid	217
		Bis(2-ethylhexyl)phthalate	96.1
Scrubber Liquor Pre Test	(H01789)[a]	Di-n-octylphthalate	86.8
Scrubber Liquor Post Test	(H01809)	Bis(2-ethylhexyl)phthalate	275
Process Water Pre Test	(H01785)[a]	Bis(2-ethylhexyl)phthalate	438
		Di-n-octylphthalate	99.7
Process Water Post Test	(H01781)	Di-n-octylphthalate	41.7
Caustic Pre Test	(H01777)[a]	--	ND[b]
Caustic Post Test	(H01806)	--	ND
Fuel Oil Pre Test	(H01901)[a]	--	ND
Fuel Oil Post Test	(H01911)	--	ND
MPF Ash	(H01874)	--	ND

[a]Test Run 2 post test data is Test Run 3 pre test data per Memorandum of Understanding.
[b]ND = Not detected.

TABLE 5-12

MPF PROCESS SAMPLES
SEMIVOLATILE RESULTS SUMMARY
TEST RUN 4

Sample ID	Sample No.	Compound	Concentration µg/L
Scrubber Brine Pre Test	(H01759)	Benzoic acid	77.1
Scrubber Brine Post Test	(H01758)	Benzoic acid	77.7
		Di-n-octylphthalate	52.9
Scrubber Liquor Pre Test	(H01761)	Di-n-octylphthalate	127
Scrubber Liquor Post Test	(H01760)	Di-n-octylphthalate	77.9
Process Water Pre Test	(H01754)	Di-n-octylphthalate	67.1
Process Water Post Test	(H01753)	Di-n-octylphthalate	163
Caustic Pre Test	(H01763)	--	ND[a]
Caustic Post Test	(H01762)	--	ND
Fuel Oil Pre Test	(H01926)	--	ND
Fuel Oil Post Test	(H01927)	--	ND
MPF Ash	(H01875)	--	ND

[a]ND = Not detected.

5.3.3 Sample Calculations

5.3.3.1 Aqueous Process Samples (Benzoic Acid in Brine)

$$\frac{2(\text{Area of component detected})(\text{Mass of internal standard})}{(\text{Area of internal standard})\ (\text{Resp. factor})(\text{Sample volume})} =$$

$$\frac{2(5862129)(40\ \mu g)}{(4391168)(0.143)(0.51\ L)} = 1464\ \mu g/L$$

(The factor of 2 is necessary because the final analytical sample is a composite of two equal volumes of acidic and basic extracts.)

5.3.3.2 MM5 Trains (For Benzyl Alcohol)

$$\frac{(\text{Area of component detected})(\text{Mass of internal standard})}{(\text{Area of internal standard})(\text{Resp. factor})} =$$

$$\frac{(6372241)(40\ \mu g)}{(1005231)(0.738)} = 343\ \mu g$$

5.4 DIOXINS and FURANS (PCDD/F)

5.4.1 Results

Table 5-13 lists the system performance results for dioxins and furans. Units are μg/dscm of stack exhaust, with correction for the field blank applied.

Total TCDDs, TCDFs, PeCDFs, PeCDDs, HxCDFs, HxCDDs, HpCDFs, HpCDDS, OCDF, and OCDD were estimated by using an average response factor for each group and by summing the estimated quantities of the compounds that meet the retention-time requirements and isotopic-abundance requirements of Method 8290. Appendix H gives data sheets for the PCDD/PCDF analytes.

Table 5-14 summarizes the total PCDD/PCDF results for the stack gas, and Table 5-15 gives the results of the analyses for target PCDD/PCDF components. Some PCDDs and PCDFs were detected. No 2,3,7,8-TCDD or TCDF was found in the stack gas. All of the PCDD/Fs, except for a low level of HpCDD in Test Run 3, that were detected were found in the back half of the train and thus would be associated with gaseous material and not particulates. (The front half of a sample train collects particulate and the back half collects gas phase analytes.) Additionally, the levels of PCDD/F when converted to toxicity equivalent (TE) (see description below) yielded less than 1 ng of 2,3,7,8-TCDD-equivalent dioxins present in any sample. The TE equivalent in stack gas would be much less than 1 ng/dscm. This is comparable to other tests at JACADS.

TABLE 5-13

MPF SYSTEM PERFORMANCE FOR PCDD/PCDF

Emitted Substances[a]		Concentration, μg/dscm			
		TR 1	TR 2	TR 3	TR 4
Sample Volume (dscm)		5.03	4.69	4.73	4.04
PCDD/PCDF	TCDF	0.000127	0.0000645	0.000112	0.0000446
	TCDD	0.00000896	0.0000078	0.0000119	0.00000523
	PeCDF	0.0000289	0.0000234	0.000165	ND[b]
	HxCDF	0.00000273	ND	0.000318	0.0000471
	HpCDF	0.0000595	ND	0.000524	0.000114
	HpCDD	ND	ND	0.0000939	ND
	OCDF	ND	ND	0.000196	ND
	OCDD	ND	ND	0.000056	ND

[a]Corrected for blank train values.
[b]ND = Not detected. Detection limits:

Run 1: 0.0000199 μg/dscm for HpCDD
0.0000398 μg/dscm for OCDF and OCDD

Run 2: 0.0000213 μg/dscm for HxCDF, HpCDF and HpCDD
0.0000426 μg/dscm for OCDF and OCDD

Run 4: 0.0000248 μg/dscm for PeCDF and HpCDD
0.0000496 μg/dscm for OCDF and OCDD

TABLE 5-14

DETERMINATION OF TOTAL PCDDs/PCDFs IN MM5 TRAINS FROM MPF

Sample Description	Sample No.	Amount (Nanograms)										2,3,7,8-TCDD Toxicity Equivalent[c]
		TCDF	TCDD	PeCDF	PeCDD	HxCDF	HxCDD	HpCDF	HpCDD	OCDF	OCDD	
Test Run 1 Filter and Front Wash	V05237	ND[a]	ND	ND	ND	ND	ND	ND	ND	ND	ND	NA[b]
Test Run 1 Resin and Back Wash	V05235	0.640	0.045	0.145	ND	0.137	ND	0.299	ND	ND	ND	0.00203
Test Run 2 Filter and Front Wash	V05253	ND	ND	ND	ND	ND	ND	ND	ND	ND	ND	NA
Test Run 2 Resin and Back Wash	V05261	0.303	0.0366	0.110	ND	ND	ND	ND	ND	ND	ND	0.00149
Test Run 3 Filter and Front Wash	V05252	ND	ND	ND	ND	ND	ND	ND	0.117	ND	ND	NA
Test Run 3 Resin and Back Wash	V05254	0.53	0.0560	0.779	ND	1.50	ND	2.47	0.326	0.925	0.609	0.236
Test Run 4 Filter and Front Wash	V05238	ND	ND	ND	ND	ND	ND	ND	ND	ND	ND	NA
Test Run 4 Resin and Back Wash	V05251	0.180	0.0218	ND	ND	0.190	ND	0.460	ND	ND	ND	0.00401

[a]ND = Not detected; detection limit of 0.02 ng for TCDFs and TCDDs; 0.10 ng for PeCDFs, PeCDDs, HxCDFs, HxCDDs, HpCDFs, and HpCDDs; and 0.20 ng for OCDFs and OCDDS.
[b]NA = Not Applicable; none detected, therefore no value can be calculated.
[c]Calculated from target compound quantities on Table 5-15.

TABLE 5-15

DETERMINATION OF TARGET PCDDs/PCDFs IN MM5 TRAINS FROM MPF

Sample Description	Sample No.	Amount (Nanograms)								
		2,3,7,8-TCDF	2,3,7,8-TCDD	1,2,3,7,8-PeCDF	2,3,4,7,8-PeCDF	1,2,3,7,8-PeCDD	1,2,3,4,7,8-HxCDF	1,2,3,6,7,8-HxCDF	1,2,3,7,8,9-HxCDF	2,3,4,6,7,8-HxCDF
Test Run 1 Filter and Front Wash	VO5237	ND[a]	ND	ND	ND	ND	ND	ND	ND	ND
Test Run 1 Resin and Back Wash	VO5235	ND	ND	ND	ND	ND	ND	ND	ND	ND
Test Run 2 Filter and Front Wash	VO5253	ND	ND	ND	ND	ND	ND	ND	ND	ND
Test Run 2 Resin and Back Wash	VO5261	ND	ND	ND	ND	ND	ND	ND	ND	ND
Test Run 3 Filter and Front Wash	VO5252	ND	ND	ND	ND	ND	ND	ND	ND	ND
Test Run 3 Resin and Back Wash	VO5254	ND	ND	ND	0.333	ND	0.116	0.121	ND	0.260
Test Run 4 Filter and Front Wash	VO5238	ND	ND	ND	ND	ND	ND	ND	ND	ND
Test Run 4 Resin and Back Wash	VO5251	ND	ND	ND	ND	ND	ND	ND	ND	ND

[a]ND = Not detected; detection limit of 0.02 ng for TCDFs and TCDDs; 0.10 ng for PeCDFs, PeCDDs, HxCDFs, HxCDDs, HpCDFs, and HpCDDs; and 0.20 ng for OCDFs and OCDDs.

TABLE 5-15 (Continued)

DETERMINATION OF TARGET PCDDs/PCDFs IN MM5 TRAINS FROM MPF

Sample Description	Sample No.	Amount (Nanograms) 1,2,3 4,7,8, HxCDD	1,2,3 6,7,8- HxCDD	1,2,3, 7,8,9 HxCDD	1,2,3,4, 6,7,8- HpCDF	1,2,3,4, 7,8,9- HpCDF	1,2,3,4, 6,7,8- HpCDD	OCDF	OCDD	Surrogate[b] (% Recv.)
Test Run 1 Filter and Front Wash	VO5237	ND[a]	ND	ND	ND	ND	ND	ND	ND	0.081(10)
Test Run 1 Resin and Back Wash	VO5235	ND	ND	ND	ND	0.203	ND	ND	ND	0.298(11)
Test Run 2 Filter and Front Wash	VO5253	ND	ND	ND	ND	ND	ND	ND	ND	0.534(67)
Test Run 2 Resin and Back Wash	VO5261	ND	ND	ND	ND	0.149	ND	ND	ND	1.80 (64)
Test Run 3 Filter and Front Wash	VO5252	ND	ND	ND	ND	ND	ND	ND	ND	0.624(78)
Test Run 3 Resin and Back Wash	VO5254	ND	ND	ND	1.28	0.412	0.180	0.925	0.609	1.79 (64)
Test Run 4 Filter and Front Wash	VO5238	ND	ND	ND	ND	ND	ND	ND	ND	0.654(82)
Test Run 4 Resin and Back Wash	VO5251	ND	ND	ND	0.198	0.203	ND	ND	ND	1.75 (62)

[a]ND = Not detected; detection limit of 0.02 ng for TCDFs and TCDDs; 0.10 ng for PeCDFs, PeCDDs, HxCDFs, HxCDDs, HpCDFs, and HpCDDs; and 0.20 ng for OCDFs and OCDDs.

[b]The surrogate is $^{37}Cl_4$-2,3,7,8-tetrachlorodibenzo(1,4)dioxin. Resin samples (VO 5234, 5236, 5235, 5261, 5654, and 5251) were spiked with 2.8 ng of the surrogate; the remaining samples were spiked with 0.8 ng of the same surrogate.

The samples of process liquids (water, liquor, brine, and caustic) and fuel oil were analyzed for PCDD/PCDF. Tables 5-16, 5-17, 5-18, 5-19, and 5-20 give the results of these analyses. Few PCDDs/PCDFs were detected and concentrations were generally just above the detection limit. Even in Test Run 2, where low concentrations of HxCDF and HpCDF were detected, the levels were transient. This was evident because by the time the post test samples for Test Run 3 were collected, no PCDD/F could be found. Some PCDDs/PCDFs were also detected in lab blanks. These PCDDs/PCDFs are suspected of being due to low-level laboratory contamination.

Table 5-21 gives the results of the analyses for target PCDD/PCDF components and Table 5-22 summarizes the total PCDD/PCDF results for MPF ash samples. In cases where the concentration of analytes were outside the method calibration ranges, samples were diluted 10-fold according to Method 8290 and reanalyzed. Both original analysis results and the results of the analysis of samples after dilution are given in Tables 5-21 and 5-22 for ash samples. Even after dilution, the chromatographic peak for 1,2,3,4,6,7,8-HpCDF was still off scale for Sample Nos. V05514, V05520, and V05521. However, it should not affect the calculated concentration by more than 10%.

The 2,3,7,8-TCDD TE values for MM5 trains and ash samples are presented in Tables 5-14 and 5-22 respectively. TE is the amount or concentration of 2,3,7,8-TCDD that yields the same toxicity as the mixture of PCDD/PCDFs that were found in the samples. The TE can be calculated as:

TE = 1.00 [2,3,7,8-TCDD]+0.10 [2,3,7,8-TCDF]+0.5 ([1,2,3,7,8-PeCDD]+[2,3,4,7,8-PeCDF])+0.05 [1,2,3,7,8-PeCDF]+0.1 ([1,2,3,4,7,8-HxCDD]+[1,2,3,6,7,8-HxCDD]+[1,2,3,7,8,9-HxCDD]+[1,2,3,4,7,8-HxCDF]+[1,2,3,7,8,9-HxCDF]+[1,2,3,6,7,8-HxCDF]+[2,3,4,6,7,8-HxCDF])+0.01 ([1,2,3,4,6,7,8-HpCDD]+[1,2,3,4,6,7,8-HpCDF]+[1,2,3,4,7,8,9-HpCDF])+0.001 ([OCDD]+[OCDF])

The factors used to calculate TE were taken from "Update of Toxicity Equivalency Factors (TEFs) for Estimating Risks Associated with Exposures to Mixtures of Chlorinated Dibenzo-p-Dioxins and Dibenzofurans (CDDs/CDFs)," March 1989, (EPA 625/3-89/16). Guidance from EPA indicates that only actual values, and not detection limits, should be used in a TE calculation.

5.4.2 Example Calculation

Example calculations are shown below:

MM5 Train (PCDD/PCDF)
1,2,3,4,6,7,8-HpCDF (SRI Sample No. V05254)
Target Analyte

TABLE 5-16

DETERMINATION OF TOTAL PCDDs/PCDFs IN PROCESS WATER SAMPLES FROM MPF

Sample Description	Sample No.	Concentration (ng/L)									
		TCDF	TCDD	PeCDF	PeCDD	HxCDF	HxCDD	HpCDF	HpCDD	OCDF	OCDD
Test Run No. 1 Pre Test	VO5264	ND[a]	ND	ND	ND	ND	ND	ND	ND	ND	ND
Test Run No. 1 Post Test	VO5273	ND	ND	ND	ND	ND	ND	ND	ND	ND	ND
Test Run No. 2 Pre Test	VO5473	ND	ND	ND	ND	0.56	ND	ND	ND	ND	ND
Test Run No. 2 Post Test/ Test Run No. 3 Pre Test[b]	VO5474	ND	ND	ND	ND	1.05	ND	1.88	ND	ND	ND
Test Run No. 3 Post Test	VO5276	ND	ND	ND	ND	ND	ND	ND	ND	ND	ND
Test Run No. 4 Pre Test	VO5357	ND	ND	ND	ND	ND	ND	ND	ND	ND	ND
Test Run No. 4 Post Test	VO5358	ND	ND	ND	ND	ND	ND	ND	ND	ND	ND

[a]ND = Not detected above reporting limit of 0.04 ng/L for TCDFs and TCDDs; 0.20 ng/L for PeCDFs, PeCDDs, HxCDFs, HxCDDs, HpCDFs, and HpCDDs; and 0.40 ng/L for OCDFs and OCDDs.
[b]Test Run No. 3 began immediately upon completion of Test Run No. 2. Accordingly, the post test results for Test Run No. 2 are the pre test results for Test Run No. 3.

TABLE 5-17

DETERMINATION OF TOTAL PCDDs/PCDFs IN SCRUBBER LIQUOR SAMPLES FROM MPF

Sample Description	Sample No.	Concentration (ng/L)									
		TCDF	TCDD	PeCDF	PeCDD	HxCDF	HxCDD	HpCDF	HpCDD	OCDF	OCDD
Test Run No. 1 Pre Test	VO5262	ND	ND	ND	ND	ND	ND	ND	ND	ND	ND
Test Run No. 1 Post Test	VO5265	ND	ND	ND	ND	ND	ND	ND	ND	ND	ND
Test Run No. 2 Pre Test	VO5311	ND	ND	ND	ND	ND	ND	ND	ND	ND	ND
Test Run No. 2 Post Test	VO5323	ND	ND	ND	ND	0.272	ND	ND	ND	ND	ND
Test Run No. 3 Pre Test	VO5346	ND	ND	ND	ND	ND	ND	ND	ND	ND	ND
Test Run No. 3 Post Test	VO5274	ND	ND	ND	ND	ND	ND	ND	ND	ND	ND
Test Run No. 4 Pre Test	VO5346	ND	ND	ND	ND	ND	ND	ND	ND	ND	ND
Test Run No. 4 Post Test	VO5347	ND	ND	ND	ND	ND	ND	ND	ND	ND	ND

[a]ND = Not detected; detection limit of 0.04 ng/L for TCDFs and TCDDs; 0.20 ng/L for PeCDFs, PeCDDs, HxCDFs, HxCDDs, HpCDFs, and HpCDDs; and 0.40 ng/L for OCDFs and OCDDs.

TABLE 5-18

DETERMINATION OF TOTAL PCDDs/PCDFs IN BRINE SAMPLES FROM MPF

Sample Description	Sample No.	Concentration (ng/L)									
		TCDF	TCDD	PeCDF	PeCDD	HxCDF	HxCDD	HpCDF	HpCDD	OCDF	OCDD
Test Run No. 1 Pre Test	VO5263	ND[a]	ND	ND	ND	ND	ND	ND	ND	ND	ND
Test Run No. 1 Post Test	VO5272	ND	ND	ND	ND	ND	ND	ND	ND	ND	ND
Test Run No. 2 Pre Test	VO5464	ND	ND	ND	ND	0.43	ND	0.43	ND	ND	ND
Test Run No. 2 Post Test/ Test Run No. 3 Pre Test	VO5465	ND	ND	ND	ND	ND	ND	ND	ND	ND	ND
Test Run No. 3 Post Test	VO5275	ND	ND	ND	ND	ND	ND	ND	ND	ND	ND
Test Run No. 4 Pre Test	VO5348	ND	ND	ND	ND	ND	ND	ND	ND	ND	ND
Test Run No. 4 Post Test	VO5351	ND	ND	ND	ND	ND	ND	ND	ND	ND	ND

[a]ND = Not detected; detection limit of 0.04 ng/L for TCDFs and TCDDs; 0.20 ng/L for PeCDFs, PeCDDs, HxCDFs, HxCDDs, HpCDFs, and HpCDDs; and 0.40 ng/L for OCDFs and OCDDs.

TABLE 5-19

DETERMINATION OF TOTAL PCDDs/PCDFs IN CAUSTIC SAMPLES FROM MPF

Sample Description	Sample No.	Concentration (ng/L)									
		TCDF	TCDD	PeCDF	PeCDD	HxCDF	HxCDD	HpCDF	HpCDD	OCDF	OCDD
Test Run No. 1 Pre Test	V05482	ND[a]	ND	ND	ND	ND	ND	ND	ND	ND	ND
Test Run No. 1 Post Test	V05483	ND	ND	ND	ND	ND	ND	ND	ND	ND	ND
Test Run No. 2 Pre Test	V05202	ND	ND	ND	ND	ND	ND	ND	ND	ND	ND
Test Run No. 2 Post Test/ Test Run No. 3 Pre Test	V05203	ND	ND	ND	ND	ND	ND	ND	ND	ND	ND
Test Run No. 3 Post Test	V05314	ND	ND	ND	ND	ND	ND	ND	ND	ND	ND
Test Run No. 4 Pre Test	V05320	ND	ND	ND	ND	ND	ND	ND	ND	ND	ND
Test Run No. 4 Post Test	V05345	ND	ND	ND	ND	ND	ND	ND	ND	ND	ND

[a]ND = Not detected; detection limit of 0.04 ng/L for TCDFs and TCDDs; 0.20 ng/L for PeCDFs, PeCDDs, HxCDFs, HxCDDs, HpCDFs, and HpCDDs; and 0.40 ng/L for OCDFs and OCDDs.

TABLE 5-20

DETERMINATION OF TOTAL PCDDs/PCDFs IN FUEL SAMPLES FROM MPF

Sample Description	Sample No.	Concentration (ng/kg)									
		TCDF	TCDD	PeCDF	PeCDD	HxCDF	HxCDD	HpCDF	HpCDD	OCDF	OCDD
Test Run No. 1 Pre Test	V05496	ND	ND	ND	ND	ND	ND	ND	ND	ND	ND
Test Run No. 1 Post Test	V05497	ND	ND	ND	ND	ND	ND	ND	ND	ND	ND
Test Run No. 2 Pre Test	V05498	ND	ND	ND	ND	ND	ND	ND	ND	ND	ND
Test Run No. 2 Post Test/ Test Run No. 3 Pre Test	V05485	ND	ND	ND	ND	ND	ND	ND	ND	ND	ND
Test Run No. 3 Post Test	V05499	ND	ND	ND	ND	ND	ND	ND	ND	ND	ND
Test Run No. 4 Pre Test	V05500	ND	ND	ND	ND	ND	ND	ND	ND	ND	ND
Test Run No. 4 Post Test	V05501	ND	ND	ND	ND	ND	ND	ND	ND	ND	ND

[a]ND = Not detected; detection limit of 0.04 ng/L for TCDFs and TCDDs; 0.20 ng/L for PeCDFs, PeCDDs, HxCDFs, HxCDDs, HpCDFs, and HpCDDs; and 0.40 ng/L for OCDFs and OCDDs.

TABLE 5-21

DETERMINATION OF TARGET PCDDs/PCDFs IN ASH SAMPLES OF TON CONTAINER RESIDUE

Sample Description	Sample No.	Concentration (ng/kg)								
		2,3,7,8-TCDF	2,3,7,8-TCDD	1,2,3,7,8-PeCDF	2,3,4,7,8-PeCDF	1,2,3,7,8-PeCDD	1,2,3,4,7,8-HxCDF	1,2,3,6,7,8-HxCDF	1,2,3,7,8,9-HxCDF	2,3,4,6,7,8-HxCDF
Test Run No. 1 Ash Composite (Containers 21, 22, 34, 35)	V05507	108	15.9	703	586	84.2	4,640	3,460	1030	2,050
Test Run No. 2 Ash Composite (Containers 39, 40, 45, 46)	V05508	636	85.4	4162	3690	590	27,700	21,900	6960	14,900
	V05514[a]	653	79.4	4280	4150	594	26,400	22,100	6990	15,300
Test Run No. 3 Ash Composite (Containers 41, 42, 47, 52)	V05510	971	120	5870	5840	919	37,900	29,600	8970	18,900
	V05521[a]	984	109	6160	5630	933	34,100	28,100	9550	22,000
Test Run No. 4 Ash Composite (Containers 55, 56, 57, 58)	V05512	230	24.3	1890	1580	236	11,800	9,660	2880	8,300
	V05520[a]	241	19.2	2010	1720	178	15,800	11,800	3100	5,790
Test Run No. 3 Ash (Container 44)	V05513	311	25.5	1380	1340	180	6,150	5,110	1560	3,780
	V05522[a]	298	26.4	1440	1441	199	6,760	5,780	1690	3,110

[a]Reanalysis (duplicate) of sample which had been diluted 10-fold.

TABLE 5-21 (Continued)

DETERMINATION OF TARGET PCDDs/PCDFs IN ASH SAMPLES OF TON CONTAINER RESIDUE

Sample Description	Sample No.	Concentration (ng/kg)							
		1,2,3, 4,7,8, HxCDD[b]	1,2,3, 6,7,8- HxCDD	1,2,3, 7,8,9 HxCDD	1,2,3,4, 6,7,8- HpCDF	1,2,3,4, 7,8,9- HpCDF	1,2,3,4, 6,7,8- HpCDD	OCDF	OCDD
Test Run No. 1 Ash Composite (Containers 21, 22, 34, 35)	V05507	136	181	441	33,900	8,590	3,040	57,900	15,500
Test Run No. 2 Ash Composite (Containers 39, 40, 45, 46)	V05508	999	1690	4860	84,300	43,400	21,000	110,000	58,000
	V05514[a]	1000	1440	4310	89,300	45,500	20,100	124,000	69,900
Test Run No. 3 Ash Composite (Containers 41, 42, 47, 52)	V05510	1480	2260	6760	83,600	58,100	26,800	203,700	88,700
	V05521[a]	1430	2190	2580	116,000	47,900	27,800	256,000	131,000
Test Run No. 4 Ash Composite (Containers 55, 56, 57, 58)	V05512	357	512	1306	35,600	28,100	8,420	110,000	32,300
	V05520[a]	402	539	632	57,000	26,400	8,100	103,000	29,900
Test Run No. 3 Ash (Container 44)	V05513	250	356	1043	17,800	7,982	3,238	14,800	7,950
	V05522[a]	267	381	527	25,700	7,910	3,600	14,800	7,360

[a]Reanalysis (duplicate) of sample which had been diluted 10-fold.
[b]The retention time for this analyte was a couple of seconds outside the retention time limits for positive identification which may be due to co-elution of the analyte with a non-target HxCDD. Therefore, the actual concentration of this analyte may be overstated.

TABLE 5-22

DETERMINATION OF TOTAL PCDDs/PCDFs IN ASH SAMPLES OF TON CONTAINER RESIDUE

Sample Description	Sample No.	Concentration (ng/kg)										2,3,7,8-TCDD Toxicity Equiv.[b]
		TCDF	TCDD	PeCDF	PeCDD	HxCDF	HxCDD	HpCDF	HpCDD	OCDF	OCDD	
Test Run No. 1 Ash Composite (Containers 21, 22, 34, 35)	V05507	1,580	223	7,730	320	30,900	1,710	63,600	5,490	57,900	15,500	2,120
Test Run No. 2 Ash Composite (Containers 39, 40, 45, 46)	V05508	14,900	1530	75,900	4060	186,000	16,100	70,600	39,400	110,000	58,500	12,100
	V05514[a]	13,900	1210	57,700	3000	169,000	64,800	41,300	41,200	124,000	69,900	12,200
Test Run No. 3 Ash Composite (Containers 41, 42, 47, 52)	V05510	23,000	2380	93,100	5280	172,000	22,400	24,800	49,400	204,000	91,500	16,500
	V05521[a]	17,600	1620	67,300	4620	226,000	22,400	81,200	57,500	256,000	131,000	15,100
Test Run No. 4 Ash Composite (Containers 55, 56, 57, 58)	V05512	2,640	358	16,000	792	59,600	4,940	37,000	17,400	110,000	32,300	5,390
	V05520[a]	4,297	232	22,700	599	71,700	4,720	46,200	15,300	103,000	31,000	5,950
Test Run No. 3 Ash (Container 44)	V05513	4,010	633	17,300	1030	19,900	3,740	12,100	6,930	14,800	7,950	3,020
	V05522[a]	5,140	490	18,200	1100	34,600	3,640	14,800	6,630	14,800	7,360	3,190

[a]Reanalysis of sample which had been diluted 10-fold.
[b]Caloulated from target compound concentrations on Table 5-21.

$$\text{Amount (HpCDF)} = \frac{\text{Area (HpCDF)}}{\text{Area (Internal Standard)}} \cdot \frac{\text{Amount (Internal Standard)}}{\text{RRF}}$$

$$= \frac{1362}{937} \cdot \frac{2\ \text{ng}}{2.280} = 1.28\ \text{ng}$$

MM5 Train (PCDD/PCDFs)
Total HpCDF (SRI Sample No. V05254)

$$\text{Amount (HpCDFs)} = \frac{\text{Area (HpCDFs)}}{\text{Area (Internal Standards)}} \cdot \frac{\text{Amount (Internal Standards)}}{\text{RRF}}$$

$$= \frac{1860}{937 + 644} \cdot \frac{4\ \text{ng}}{1.906} = 2.47\ \text{ng}$$

5.5 VOLATILE ORGANICS ANALYSES

5.5.1 Results

Table 5-23 provides the system performance for volatile products of incomplete combustion for the facility. Units are µg/dscm of stack exhaust, with blank correction applied.

The results from the analyses of VOST samples and aqueous process samples for volatile organic compounds are given in Tables 5-24 through 5-28. For VOST tubes and condensates the results are given in total mass collected while for aqueous process samples the results are reported as concentrations in µg/L.

The aqueous process samples contained low levels of acetone, 2-butanone, bromoform and methylene chloride. Acetone, 2-butanone and methylene chloride are common laboratory and industrial contaminants. Bromoform was present in levels below the lowest level of the calibration curve.

All of the TCLP ash samples contained the laboratory contaminants acetone and methylene chloride. Runs 1 and 2 ash samples also contained chloromethane.

Several of the volatile compounds, acetone, methylene chloride, 2-butanone, benzene, toluene, styrene and bromoform were found in all of the VOST tubes. Chloromethane, vinyl chloride, carbon disulfide and carbon tetrachloride were present in some of the VOST tubes. Only a few of the VOST tubes contained chloroform and ethylbenzene. Many of the volatile compounds found are common laboratory and industrial contaminants, such as, 2-butanone, benzene, toluene, carbon disulfide, carbon tetrachloride and chloroform. Other compounds, acetone and methylene chloride, were also present in the blanks.

Spectra and estimated amounts of the tentatively identified compounds are presented in Appendix I.

TABLE 5-23

MPF SYSTEM PERFORMANCE FOR VOLATILE PRODUCTS OF INCOMPLETE COMBUSTION

	Test Run			
	1	2	3	4
Sample Volume (dscm)	0.0816	0.0798	0.0802	0.0807
Emitted Substances[b]	Concentration[a], μg/dscm			
Acetone	16	8.3	ND[b]	3.9
Chloromethane	1.8	7.5	7.3	2.2
Vinyl Chloride	0.53	2.3	9.9	0.48
Carbon Disulfide	3.7	2.7	3.1	4.7
Methylene Chloride	13	10	1.2	1.7
2-Butanone	24	22	23	21
Chloroform	0.43	1.2	1.4	0.79
Carbon Tetrachloride	1.3	2.5	2.0	2.1
Benzene	27	3.8	4.2	7.7
Toluene	2.9	6.7	13	1.6
Chlorobenzene	ND	ND	0.66	0.26
Styrene	7.2	7.4	6.7	9.4
Bromoform	5.4	8.0	7.0	4.5
Ethylbenzene	0.24	ND	0.50	ND
1,1,1 Trichloroethane	0.43	ND	ND	ND
1,1 Dichloroethane	ND	0.21	ND	ND

[a]Values blank corrected using the field blank results.
[b]ND = Not detected. (Detection limit is 0.2 μg/dscm for volatile organics.)

TABLE 5-24

VOST VOLATILE ORGANIC RESULTS SUMMARY
TEST RUN 1

Sample ID	Sample No.	Compound	Amount (ng)
Pair #1		Chloromethane	147
Tenax	9J-1A-48	Vinyl Chloride	43.3
Tenax/Charcoal	9J-1A-49	Acetone	454
		Carbon Disulfide	60.1
		Methylene Chloride	292
		2-Butanone	540
		Chloroform	35
		1,1,1-Trichloroethane	35.2
		Toluene	103
		Styrene	167
		Bromoform	103
		Carbon Tetrachloride	102
		Benzene	716
		Ethylbenzene	18.5
Pair #2		Acetone	399
Tenax	9J-1A-50	Carbon Disulfide	172
Tenax/Charcoal	9J-1A-51	Methylene Chloride	151
		2-Butanone	542
		Benzene	705
		Toluene	70.8
		Styrene	160
		Bromoform	108
Pair #3		Acetone	273
Tenax	9J-1A-52	Carbon Disulfide	162
Tenax/Charcoal	9J-1A-53	Methylene Chloride	140
		2-Butanone	480
		Benzene	524
		Toluene	83.8
		Styrene	135
		Bromoform	103
Pair #4		Acetone	211
Tenax	9J-1A-54	Methylene Chloride	80.4
Tenax/Charcoal	9J-1A-55	2-Butanone	403
		Benzene	292
		Toluene	45.1
		Styrene	122
		Bromoform	123

TABLE 5-24 (Continued)

VOST VOLATILE ORGANIC RESULTS SUMMARY
TEST RUN 1

Sample ID	Sample No.	Compound	Amount (ng)
Field Blank		Carbon Disulfide	31.1
Tenax	9J-1A-56	Toluene	17.2
Tenax/Charcoal	9J-1A-57		
Trip Blank		Methylene Chloride	68.7
Tenax	9J-1A-58		
Tenax/Charcoal	9J-1A-59		
Condensate #1	9J-1A-60		ND[a]
Condensate #2	9J-1A-61	Methylene Chloride	506
Condensate #3[b]			
Condensate #4	9J-1A-63	Methylene Chloride	362
Condensate Blank	9J-1A-64	Methylene Chloride	246

[a]ND = Not detected. Detection limit 15 ng.
[b]Broken.

TABLE 5-25

VOST VOLATILE ORGANIC RESULTS SUMMARY
TEST RUN 2

Sample ID	Sample No.	Compound	Amount (ng)
Pair #1	9J-3-36	Chloromethane	91.4
Tenax	9J-3-37	Vinyl Chloride	68.7
Tenax/Charcoal		Acetone	204
		Carbon Disulfide	21.1
		Methylene Chloride	321
		2-Butanone	358
		Carbon Tetrechloride	26.1
		Benzene	73.5
		Toluene	89.7
		Styrene	92.1
		Bromoform	178
Pair #2	9J-3-38	Chloromethane	162
Tenax	9J-3-39	Vinyl Chloride	52.9
Tenax/Charcoal		Carbon Disulfide	171
		Methylene Chloride	289
		2-Butanone	232
		Chloroform	20.9
		Benzene	77.7
		Toluene	81.6
		Styrene	108
		Bromoform	167
Pair #3	9J-3-40	Chloromethane	197
Tenax	9J-3-41	Vinyl Chloride	61.7
Tenax/Charcoal		Acetone	450
		Carbon Disulfide	23.7
		Methylene Chloride	440
		2-Butanone	236
		Chloroform	31.9
		Carbon Tetrachloride	82.6
		Benzene	73.2
		Toluene	288
		Styrene	281
		Bromoform	144
		1,1-Dichloroethene	16.7

TABLE 5-25 (Continued)

VOST VOLATILE ORGANIC RESULTS SUMMARY
TEST RUN 2

Sample ID	Sample No.	Compound	Amount (ng)
Pair #4		Chloromethane	149
Tenax	9J-3-42	Acetone	341
Tenax/Charcoal	9J-3-43	Methylene Chloride	410
		2-Butanone	339
		Chloroform	45
		Carbon Tetrachloride	93.6
		Benzene	77
		Toluene	76
		Styrene	107
		Bromoform	149
Field Blank		Acetone	110
Tenax	9J-3-44	Methylene Chloride	157
Tenax/Charcoal	[b]		
Trip Blank		Acetone	139
Tenax	9J-3-46	Carbon Disulfide	49.1
Tenax/Charcoal	9J-3-47	Methylene Chloride	247
Condensate #1	9J-3-48		ND[a]
Condensate #2	9J-3-49		ND
Condensate #3	9J-3-50		ND
Condensate #4	9J-3-51	2-Butanone	558
Condensate Blank	9J-3-52	Methylene Chloride	182

[a]ND = Not detected. Detection limit 15 ng.
[b]Broken.

TABLE 5-26

VOST VOLATILE ORGANIC RESULTS SUMMARY
TEST RUN 3

Sample ID	Sample No.	Compound	Amount (ng)
Pair #1		Acetone	142
Tenax	9J-4-34	Carbon Disulfide	520
Tenax/Charcoal	9J-4-35	Methylene Chloride	255
		2-Butanone	395
		Chloroform	17.3
		Carbon Tetrechloride	22.2
		Benzene	71.5
		Toluene	460
		Styrene	124
		Bromoform	128
Pair #2		Chloromethane	293
Tenax	9J-4-36	Vinyl Chloride	76.2
Tenax/Charcoal	9J-4-37	Carbon Disulfide	24.6
		Methylene Chloride	298
		2-Butanone	472
		Chloroform	53.2
		Carbon Tetrachloride	108
		Benzene	101
		Toluene	271
		Chlorobenzene	18.8
		Styrene	127
		Bromoform	110
		Ethylbenzene	19.7
Pair #3		Chloromethane	180
Tenax	9J-4-38	Vinyl Chloride	655
Tenax/Charcoal	9J-4-39	Methylene Chloride	94.7
		Chloroform	19.9
		Benzene	94.6
		Toluene	203
		Chlorobenzene	18.2
		Styrene	135
		Bromoform	227
		Ethylbenzene	20.7

TABLE 5-26 (Continued)

VOST VOLATILE ORGANIC RESULTS SUMMARY
TEST RUN 3

Sample ID	Sample No.	Compound	Amount (ng)
Pair #4		Chloromethane	111
Tenax	9J-4-40	Vinyl Chloride	64.3
Tenax/Charcoal	9J-4-41	Carbon Disulfide	46.6
		Methylene Chloride	437
		2-Butanone	451
		Chloroform	19.7
		Carbon Tetrachloride	33.3
		Benzene	66.2
		Toluene	104
		Chlorobenzene	15.9
		Styrene	149
		Bromoform	94.5
Field Blank	9J-4-42	Acetone	164
Tenax	9J-4-43	Carbon Disulfide	268
Tenax/Charcoal		Methylene Chloride	339
Condensate #1	9J-4-44		ND[a]
Condensate #2	9J-4-45		ND
Condensate #3	9J-4-46	2-Butanone	492
Condensate #4	9J-4-47		ND
Condensate Blank	[b]		

[a]ND = Not detected. Detection limit 15 ng.
[b]Broken.

TABLE 5-27

VOST VOLATILE ORGANIC RESULTS SUMMARY
TEST RUN 4

Sample ID	Sample No.	Compound	Amount (ng)
Pair #1			
Tenax	9J-5-44	Methylene Chloride	83.8
Tenax/Charcoal	*	2-Butanone	383
		Chloroform	34.7
		Carbon Tetrechloride	97.5
		Benzene	138
		Toluene	56.4
		Chlorobenzene	21.1
		Styrene	304
		Bromoform	90.4
Pair #2		Acetone	420
Tenax	9J-5-46	Carbon Disulfide	390
Tenax/Charcoal	9J-5-47	Methylene Chloride	77.9
		2-Butanone	484
		Benzene	147
		Toluene	47.1
		Styrene	141
		Bromoform	99.4
Pair #3		Chloromethane	80.6
Tenax	9J-5-48	Vinyl Chloride	38.5
Tenax/Charcoal	9J-5-49	Acetone	300
		Carbon Disulfide	84.7
		Methylene Chloride	60.4
		2-Butanone	426
		Carbon Tetrachloride	15.7
		Benzene	176
		Toluene	35.6
		Styrene	152
		Bromoform	100

*Broken.

TABLE 5-27 (Continued)

VOST VOLATILE ORGANIC RESULTS SUMMARY
TEST RUN 4

Sample ID	Sample No.	Compound	Amount (ng)
Pair #4		Chloromethane	93.5
Tenax	9J-5-50	Acetone	305
Tenax/Charcoal	9J-5-51	Carbon Disulfide	315
		Methylene Chloride	156
		2-Butanone	378
		Chloroform	28.8
		Carbon Tetrachloride	59.8
		Benzene	157
		Toluene	53.4
		Styrene	159
		Bromoform	74.3
Field Blank		Acetone	236
Tenax	9J-5-52	Carbon Disulfide	162
Tenax/Charcoal	9J-5-53	Methylene Chloride	216
		Toluene	16.4
Trip Blank		Acetone	170
Tenax	9J-5-54	Carbon Disulfide	36.6
Tenax/Charcoal	9J-5-55	Methylene Chloride	226
Condensate #1	9J-5-56	Methylene Chloride	454
Condensate #2	9J-5-57	Methylene Chloride	370
Condensate #3	9J-5-58	Methylene Chloride	505
Condensate #4	9J-5-59	Methylene Chloride	743
Condensate Blank	9J-5-60	Methylene Chloride	603

TABLE 5-28

AQUEOUS VOLATILE ORGANICS SUMMARY

Test Run	Sample ID	Sample No.	Compound	Concentration (μg/L)
1	Process Water Pre Test	9J-1A-89	Bromoform	11.7
	Process Water Post Test	9J-1A-118	Bromoform	4.72
	Caustic Pre Test	95J-1A-83	Acetone	23.5
			2-Butanone	65.1
	Caustic Post Test	9J-1A-112	Acetone	17.8
			2-Butanone	65.3
	Scrubber Brine Pre Test	9J-1A-77	2-Butanone	31.9
	Scrubber Brine Post Test	9J-1A-105	2-Butanone	34.8
	Scrubber Liquor Pre Test	9J-1A-71	--	ND[a]
	Scrubber Liquor Post Test	9J-1A-97	Methylene Chloride	7.76
	MPF Ash (TCLP)	9J-1A-123	Chloromethane	24.6
			Acetone	30.5
			Methylene Chloride	55.7
2	Process Water Pre Test	9J-3-76	Methylene Chloride	3.3
	Process Water Post Test	9J-3-105	--	ND
	Caustic Pre Test	9J-3-70	2-Butanone	69.4
	Caustic Post Test	9J-3-98	Acetone	26
			2-Butanone	89.4
	Scrubber Brine Pre Test	9J-3-64	2-Butanone	25
	Scrubber Brine Post Test	9J-3-92	2-Butanone	41.8
	Scrubber Liquor Pre Test	9J-3-59	2-Butanone	16.5
	Scrubber Liquor Post Test	9J-3-86	--	ND
	MPF Ash (TCLP)	9J-3-144	Chloromethane	65.7
			Acetone	26.6
			Methylene Chloride	43.7
3	Process Water Post Test	9J-4-73	2-Butanone	17.8
			Bromoform	4.94
	Caustic Post Test	9J-4-67	Acetone	17.4
			2-Butanone	77.1
	Scrubber Brine Post Test	9J-4-61	2-Butanone	32.8
	Scrubber Liquor Post Test	9J-4-55	--	ND
	MPF Ash (TCLP)	9J-4-79	Acetone	41.5
			Methylene Chloride	61.6

[a]ND = Not detected. Detection limit 3 mg/L.

TABLE 5-28 (Continued)

AQUEOUS VOLATILE ORGANICS SUMMARY

Test Run	Sample ID	Sample No.	Compound	Concentration (μg/L)
4	Process Water Pre Test	9J-5-84	Acetone	20.2
	Process Water Post Test	9J-5-112	2-Butanone	17.4
	Caustic Pre Test	9J-5-79	Acetone	17.2
			2-Butanone	73.5
	Caustic Post Test	9J-5-106	Acetone	28.1
			2-Butanone	73.5
	Scrubber Brine Pre Test	9J-5-72	2-Butanone	24.9
	Scrubber Brine Post Test	9J-5-100	2-Butanone	25.4
	Scrubber Liquor Pre Test	9J-5-66	Methylene Chloride	22.7
	Scrubber Liquor Post Test	9J-5-94		ND[a]
	MPF Ash (TCLP)	9J-5-118	Acetone	28.5
			Methylene Chloride	19.5
	TCLP Blank	--	Acetone	25
			Methylene Chloride	20.2

[a]ND = Not Detected. Detection limit 3 mg/L.

5.5.2 Sample Calculations

5.5.2.1 Aqueous Process Samples (Run 3 Process Water Pre Test for 2-butanone)

$$\frac{\text{(Area of component detected)(Concentration of internal standard)}}{\text{(Area of internal standard) (Resp. factor from 5-pt calibration)}} =$$

$$\frac{(7862)(50\ \mu g/L)}{(123969)(0.178)} = 17.8\ \mu g/L$$

5.5.2.2 VOST Tubes (Run 2 Pair 1 Tenax for Benzene)

$$\frac{\text{(Area of component detected)(Mass of internal standard)}}{\text{(Area if internal standard)(Resp. factor from 3-pt calibration)}} =$$

$$\frac{(156797)(250\ ng)}{(436975)(1.220)} = 73.5\ ng$$

5.6 ANIONS ANALYSIS

5.6.1 Anions in Stack Gas

5.6.1.1 Method Five Acid Train (M5AT)

Chloride was measured in the stack gas to determine the levels of Cl_2 and HCl in the MPF emissions. The required samples were collected with an M5AT. Details of the operating parameters for the M5AT are presented as specified in Table 5-29 and indicate that the sampling was valid.

Sample preparation consisted of taking a sample volume for field verification. Impinger 2 and impinger 3 from each run were composited as one sample. This procedure was repeated for impinger 4 and impinger 5. Then 2 mL of each sample was injected into a Dionex DX-100 ion chromatograph. To keep peaks within the proper range, dilutions of the samples were made as needed. Using the PE Nelson Access*Chrom data system, values for the above mentioned anions were obtained in mg/L. These results were then used to calculate acid levels using the formulae contained in SW-846 Method No. 9057.

Tables 5-30 through 5-33 give the results of the analyses of the M5AT for HCl and Cl_2. By using both H_2SO_4 and NaOH impingers, the M5AT differentiates between HCl and Cl_2 in the stack.

No HCl was detected in the stack gas (detection limit, <0.003 lb/hr) in three of the four tests. A measurable emission rate of 0.05 lb/hr was found in one test. The allowable limit for HCl emission is 4 lb/hr. Thus the HCl emission rate for each test run was well under the limit. Complete tabulations of reduced data and calculations of concentrations for the trains are provided in Appendix L.

TABLE 5-29

METHOD 5 ACID TRAIN CONDITIONS AND RESULTS

Parameter	Units	Test Run 1	2	3	4
Date	--	8/20/92	8/23/92	8/23/92	8/26/92
Sample Time	minutes	120	120	120	120
Sample Volume	dscf	57.52	57.87	75.93	70.67
	dscm	1.63	1.64	2.15	2.00
Stack Gas Flow Rate	dscfm	6179	6265	6132	6283
Stack Gas Temperature	°F	190	189	192	191
Stack Gas Moisture	%	35.0	34.0	36.6	33.6
Percent Isokinetic		98.23	97.4	100.5	93.5
HCl Concentration	mg/dscm	ND[a]	2.12	ND	ND
HCl Emission Rate	lb/hr	NA[b]	0.050	NA	NA
Part. Catch	mg	10.4	2.2	3.5	0.4
Part. Concentration					
@ 7% O_2	gr/dscf	0.00586	0.00136	0.00204	0.00024
	mg/dscm	13.4	3.10	4.66	0.54
@ 12% CO_2	gr/dscf	0.00711	0.00167	0.00246	0.00027
	mg/dscm	16.3	3.83	5.63	0.62
Oxygen Concentration[c]	%	14.3	14.9	14.6	14.4
CO_2 Concentration[c]	%	4.7	4.2	4.5	4.9
Leak Checks:					
Pitot Pre Test		pass	pass	pass	pass
Pitot Post Test		pass	pass	pass	pass
Train Pre Test	cfm at	0.000	0.002	0.008	0.000
	in. Hg	16	15	15	15
Train Post Test	cfm at	0.000	0.001	0.000	0.000
	in. Hg	6.0	6.0	7.0	7.0

[a]ND = Not detected. Detection limit <0.15 mg/dscm.
[b]NA = Not applicable. No meaningful result can be calculated.
[c]Orsat values at stack.

TABLE 5-30

JACADS MPF ACID TRAIN RESULTS
TEST RUN 1

Sample No.	Identification	Volume mL	Chloride μg/mL	HCl μg	Cl_2 μg
9J-1A-3	Impinger 1	440	ND[a]	--	--
9J-1A-4	Impinger 2	445	ND	--	--
9J-1A-5	Impinger 3	165			
9J-1A-6	Impinger 4	145	ND	--	--
9J-1A-7	Impinger 5	135			
TOTAL		1330	--	--	--
9J-1A-8	H_2SO_4 Blank	105	ND	--	--
9J-1A-9	NaOH Blank	100	ND	--	--
9J-1A-10	H_2O Lot #913875 Blank	100	ND	--	--

[a]ND = Not detected. Detection limit - Chloride = .21 μg/mL.

TABLE 5-31

JACADS MPF ACID TRAIN RESULTS
TEST RUN 2

Sample No.	Identification	Volume mL	Chloride μg/mL	HCl μg	Cl_2 μg
9J-3-3	Impinger 1	390	6.98	2800	--
9J-3-4	Impinger 2	410	1.18	680	--
9J-3-5	Impinger 3	150			
9J-3-6	Impinger 4	130	ND[a]	--	--
9J-3-7	Impinger 5	125			
TOTAL		1205	8.16	3480	--
9J-3-8	H_2SO_4 Blank	125	ND	--	--
9J-3-9	NaOH Blank	115	ND	--	--
9J-3-10	H_2O Lot #913875 Blank	100	ND	--	--

[a]ND = Not detected. Detection limit - Chloride = .21 μg/mL.

TABLE 5-32

JACADS MPF ACID TRAIN RESULTS
TEST RUN 3

Sample No.	Identification	Volume mL	Chloride μg/mL	HCl μg	Cl_2 μg
9J-4-3	Impinger 1	390	ND[a]	--	--
9J-4-4	Impinger 2	410	ND	--	--
9J-4-5	Impinger 3	150			
9J-4-6	Impinger 4	130	ND	--	--
9J-4-7	Impinger 5	125			
TOTAL		1205	--	--	--

[a]ND = Not detected. Detection limit - Chloride = .21 μg/mL.

TABLE 5-33

JACADS MPF ACID TRAIN RESULTS
TEST RUN 4

Sample No.	Identification	Volume mL	Chloride μg/mL	HCl μg	Cl_2 μg
9J-5-3	Impinger 1	365	ND[a]	--	--
9J-5-4	Impinger 2	490	ND	--	--
9J-3-5	Impinger 3	175			
9J-5-6	Impinger 4	135	ND	--	--
9J-5-7	Impinger 5	145			
TOTAL		1310	--	--	--
9J-5-8	H_2SO_4 Blank	100	ND	--	--
9J-5-9	NaOH Blank	100	ND	--	--
9J-5-10	H_2O Lot #922094 Blank	105	ND	--	--

[a]ND = Not detected. Detection limit - Chloride = .21 μg/mL.

5.6.1.2 Anions in Liquid Process Samples

The anions chloride, fluoride, phosphate, and sulfate were determined in the fuel oil and process liquid samples. Preparation of fuel oils consisted of evaporating 10 mL of the sample to dryness using a hot plate. 10 mL of deionized water was then added to the sample residue. The water/residue combination was then filtered and run on the ion chromatograph. Aqueous process liquid samples were diluted as necessary to provide correct range response from the instrument.

Analysis of these samples and data reduction were performed as specified in Section 5.6.1.1 by the PE Nelson Access*Chrom data system with results reported as mg/L.

The anions found in the process liquid samples were as expected for the incineration of HD. In all test runs, the level of chloride and sulfate increased in the scrubber brine from the pre test samples to the post test samples. This indicated that the MPF PAS system was effectively removing acid gases from the exhaust gas.

Tables 5-34 through 5-37 provide these results. Table 5-38 gives the detection limits for each anion in each of the process liquids.

5.7 METALS ANALYSIS

Samples intended for the determination of metals were collected from the stack emissions with an MMT. Table 5-39 indicates the operating parameters for this train. Particulate matter was also collected with the MMT, and the results of particle-concentration measurements are also detailed in the table.

The system performance for metals is given in Table 5-40.

The results for the MMT are given in Tables 5-41 through 5-44. These results show that twelve of the twenty metals screened were found in one or more of the samples. In some cases, these metals were also found in the blanks. The data are reported as front (particulate and filter components) and back (impingers). There are no regulatory limits for metal concentrations in these sample media. However, the concentrations of most metals were near or below the applicable method detection limits. Complete tabulations of reduced data and calculations of concentrations for the train samples are provided in Appendix M.

The results of the analyses of MPF process samples for metals are given in Table 5-45 through 5-48. No detectable concentration of cobalt or thallium was found in the liquid process samples. Lead was the only TCLP metal found above the regulatory limit of 5 μg/mL. It was found above the limit in the scrubber brines from Test Runs 1, 2 and 3. Since there is no lead in Agent HD, it is speculated that the source may be lead based paint or the metallic composition of the ton containers.

Even though no regulatory limit exists for the non-TCLP metals, the concentrations found were low, with most being near their detection limits.

TABLE 5-34

JACADS - ANION RESULTS IN MPF PROCESS SAMPLES
TEST RUN 1

Sample No.	Description	Fluoride mg/L	Chloride mg/L	Phosphate mg/L	Sulfate mg/L
9J-1A-69	Scrubber Liquor Pre Test	ND[a]	517	ND	185
9J-1A-97	Scrubber Liquor Post Test	68.23	914	ND	261
9J-1A-75	Brine Pre Test	ND	20700	ND	14000
9J-1A-103	Brine Post Test	ND	26200	ND	20200
9J-1A-81	Caustic Pre Test	704	2040	ND	ND
9J-1A-109	Caustic Post Test	777	2750	ND	ND
9J-1A-87	Process Water Pre Test	ND	337	ND	6.53
9J-1A-115	Process Water Post Test	ND	337	ND	6.24
9J-1A-91	Fuel Oil Pre Test	ND	ND	ND	ND
9J-1A-119	Fuel Oil Post Test	ND	ND	ND	ND

[a]ND = Not detected. Detection limits given in Table 5-38.

TABLE 5-35

JACADS - ANION RESULTS IN MPF PROCESS SAMPLES
TEST RUN 2

Sample No.	Description	Fluoride mg/L	Chloride mg/L	Phosphate mg/L	Sulfate mg/L
9J-3-56	Scrubber Liquor Pre Test	ND[a]	495	ND	145
9J-3-84	Scrubber Liquor Post Test	ND	470	ND	192
9J-3-62	Brine Pre Test	ND	10100	ND	10300
9J-3-90	Brine Post Test	ND	18900	ND	17500
9J-3-68	Caustic Pre Test	646	2320	ND	ND
9J-3-96	Caustic Post Test	611	2350	ND	ND
9J-3-74	Process Water Pre Test	ND	343	ND	7.13
9J-3-102	Process Water Post Test	ND	356	ND	7.92
9J-3-78	Fuel Oil Pre Test	ND	ND	ND	ND
9J-3-106	Fuel Oil Post Test	ND	ND	ND	ND

[a]ND = Not detected. Detection limits are given in Table 5-38.

TABLE 5-36

JACADS - ANION RESULTS IN MPF PROCESS SAMPLES
TEST RUN 3

Sample No.	Description	Fluoride mg/L	Chloride mg/L	Phosphate mg/L	Sulfate mg/L
9J-3-84	Scrubber Liquor Pre Test[a]	ND[b]	470	ND	192
9J-4-53	Scrubber Liquor Post Test	ND	580	ND	316
9J-3-90	Brine Pre Test[a]	ND	18900	ND	17500
9J-4-59	Brine Post Test	ND	22800	ND	22500
9J-3-96	Caustic Pre Test[a]	611	2350	ND	ND
9J-4-65	Caustic Post Test	561	2240	ND	ND
9J-3-102	Process Water Pre Test[a]	ND	356	ND	7.92
9J-4-71	Process Water Post Test	ND	337	ND	7.6
9J-3-106	Fuel Oil Pre Test[a]	ND	ND	ND	ND
9J-4-75	Fuel Oil Post Test	ND	ND	ND	ND

[a]Test Run 3 started immediately upon completion of Test Run 2. Accordingly, the Test Run 2 post test results are the pre test results for Test Run 3.
[b]ND = Not detected. Detection limits are given in Table 5-38.

TABLE 5-37

JACADS - ANION RESULTS IN MPF PROCESS SAMPLES
TEST RUN 4

Sample No.	Description	Fluoride mg/L	Chloride mg/L	Phosphate mg/L	Sulfate mg/L
9J-5-64	Scrubber Liquor Pre Test	ND[a]	428	ND	152
9J-5-92	Scrubber Liquor Post Test	ND	452	ND	215
9J-5-70	Brine Pre Test	ND	13100	ND	11700
9J-5-98	Brine Post Test	ND	20700	ND	18400
9J-5-76	Caustic Pre Test	561	2100	ND	ND
9J-5-104	Caustic Post Test	557	2250	ND	ND
9J-5-82	Process Water Pre Test	ND	377	ND	8.46
9J-5-110	Process Water Post Test	ND	411	ND	10.2
9J-5-86	Fuel Oil Pre Test	ND	ND	ND	ND
9J-5-114	Fuel Oil Post Test	ND	ND	ND	ND

[a]ND = Not detected. Detection limits are given in Table 5-38.

TABLE 5-38

JACADS - ANION RESULTS
DETECTION LIMITS

Description	Dilution Factors	Fluoride mg/L	Chloride mg/L	Phosphate mg/L	Sulfate mg/L
Scrubber Liquor	1:50	31.3	46.9	10.9	5.63[a]
Brine	1:2000	1250	1880	21900	11300
Caustic	1:200	125	188	2190	1130
Process Water	1:50	31.3	46.9	10.9	5.63[a]
Fuel Oil		0.625[a]	0.938	10.9	5.63[a]

[a]Undiluted.

TABLE 5-39

METHOD 5 MULTIPLE METALS TRAIN CONDITIONS AND RESULTS

Parameter	Units	Test Run 1	2	3	4
Date	--	8/20/92	8/23/92	8/23/92	8/26/92
Sample Time	minutes	72	72	72	72
Sample Volume	dscf	44.15	49.11	47.31	47.08
	dscm	1.25	1.39	1.34	1.33
Stack Gas Flow Rate	dscfm	5824	6401	6169	5959
Stack Gas Temperature	°F	188	191	189	192
Stack Gas Moisture	%	34.9	35.1	34.8	37.9
Percent Isokinetic		96.5	97.6	97.6	100.5
Part. Catch	mg	4.8	1.4	1.0	0.8
Particulate Concentration					
@ 7% O_2	gr/dscf	0.00369	0.00098	0.00070	0.00054
	mg/dscm	8.45	2.25	1.59	1.23
@ 12% CO_2	gr/dscf	0.00457	0.00120	0.00085	0.00063
	mg/dscm	10.4	2.74	1.94	1.44
Oxygen Concentration[a]	%	14.6	14.7	14.4	14.1
CO_2 Concentration[a]	%	4.4	4.4	4.6	5.0
Leak Checks:					
Pitot Pre Test		pass	pass	pass	pass
Pitot Post Test		pass	pass	pass	pass
Train Pre Test	cfm at	0.004	0.006	0.006	0.006
	in. Hg	15	15	15	15
Train Post Test	cfm at	0.002	0.004	0.004	0.000
	in. Hg	6.0	8.0	7.0	8.0

[a]Orsat values at stack.

TABLE 5-40

SYSTEM PERFORMANCE FOR METALS

Emitted Substances[b]		Concentration, μg/dscm[a]			
		TR 1	TR 2	TR 3	TR 4
Sample Volume (dscm)		1.25	1.39	1.34	1.33
Metals	Arsenic	0.8	18.4	ND[c]	1.6
	Selenium	5.7	4.2	ND	ND
	Chromium	1.5	2.3	2.6	2.6
	Lead	ND	16	6.3	17
	Barium	ND	ND	ND	8.2
	Tin	ND	ND	12	ND
	Phosphorus	97	43	81	84
	Zinc	21	27	21	22
	Boron	205	81	161	132
	Manganese	0.2	8.6	409	2.1
	Copper	ND	5.1	3.8	ND
	Mercury	ND	6.4	4.7	2.0

[a]Reported with two significant figures if greater than 1 μg/dscm and one significant figure if less than 1 μg/dscm.
[b]Values blank corrected based on field blanks.
[c]ND = Not detected, detection limits listed below.

Run 1: 4.0 μg/dscm for Lead and Copper
8.0 μg/dscm for Barium and Tin
1.6 μg/dscm for Mercury

Run 2: 7.2 μg/dscm for Barium and Tin

Run 3: 3.7 μg/dscm for Arsenic and Selenium
7.5 μg/dscm for Barium

Run 4: 3.8 μg/dscm for Selenium and Copper
7.5 μg/dscm for Tin

TABLE 5-41

MPF METALS TRAIN RESULTS - TEST RUN 1
All Results Reported in Total μg

Sample Description	Front[a]	Back[b]	Mercury	Field Blank Front	Field Blank Back	Mercury Field Blank
As	11.8	<5		10.8	<5	
Se	7.15	<5		<5	<5	
Cr	4.05	<3		2.23	<3	
Cd	<2	<3		<2	<3	
Pb	<5	<5		<5	<5	
Ba	<10	<10		<10	<10	
Be	<2	<2		<2	<2	
Ag	<10	<10		<10	<10	
Sn	<10	<10		<10	<10	
Sb	<10	<10		<10	<10	
P	191	22.7		73.7	18.9	
Zn	25.6	16.2		15.6	<5	
Co	<5	<5		<5	<5	
Ni	<5	<5		<5	<5	
B	390	15.5		147	2.8	
Mn	<2	9.09		<2	8.88	
V	<2	<5		<2	<2	
Cu	<5	<5		<5	<5	
Hg	<0.2	<5	<2.0	<0.2	<0.5	<1.0
Tl	<1.0	<1.0		<1.0	<1.0	

[a]Front half of MMT samples include the combined filter, acetone and nitric acid front washes.
[b]Back half of MMT samples include the nitric acid/peroxide impingers.

TABLE 5-42

MPF METALS TRAIN RESULTS - TEST RUN 2
All Results Reported in Total μg

Sample Description	Front[a]	Back[b]	Mercury	Field Blank Front[c]	Field Blank Back	Mercury Field Blank
As	36.4	<5		10.8	<5	
Se	5.9	<5		<5	<5	
Cr	5.43	<3		2.23	<3	
Cd	<2	<3		<2	<3	
Pb	22.0	<5		<5	<5	
Ba	<10	<10		<10	<10	
Be	<2	<2		<2	<2	
Ag	<10	<10		<10	<10	
Sn	<10	<10		<10	<10	
Sb	<10	<10		<10	<10	
P	125	29.5		73.7	20.6	
Zn	34.6	37.2		15.6	18.1	
Co	<5	<5		<5	<5	
Ni	<5	<5		<5	<5	
B	258	7.2		147	4.3	
Mn	6.07	5.95		<2	<2	
V	<2	<2		<2	<2	
Cu	7.11	<5		<5	<5	
Hg	<0.2	<5	8.84	<0.2	<0.5	<1.0
Tl	<1.0	<1.0		<1.0	<1.0	

[a]Front half of MMT samples include the combined filter, acetone and nitric acid front washes.
[b]Back half of MMT samples include the nitric acid/peroxide impingers.

TABLE 5-43

MPF METALS TRAIN RESULTS - TEST RUN 3
All Results Reported in Total μg

Sample Description	Front[a]	Back[b]	Mercury	Field Blank Front	Field Blank Back	Mercury Field Blank
As	10.8	<5		12.9	<5	
Se	<5	<5		8.00	<5	
Cr	3.46	<3		<2	<3	
Cd	<2	<3		<2	<3	
Pb	8.49	<5		<5	<5	
Ba	<10	<10		<10	<10	
Be	<2	<2		<2	<2	
Ag	<10	<10		<10	<10	
Sn	<10	16.5		<10	<10	
Sb	<10	<10		<10	<10	
P	97.5	30.4		<10	19.5	
Zn	23.0	52.5		<5	47.4	
Co	<5	<5		<5	<5	
Ni	<5	<5		<5	<5	
B	207	12.1		<10	<10	
Mn	6.51	541		<2	<2	
V	<2	<2		<2	<2	
Cu	5.05	<5		<5	<5	
Hg	<0.2	<5	6.24	<0.2	<0.5	<1.0
Tl	<1.0	<1.0		<1.0	<1.0	

[a]Front half of MMT samples include the combined filter, acetone and nitric acid front washes.
[b]Back half of MMT samples include the nitric acid/peroxide impingers.

TABLE 5-44

MPF METALS TRAIN RESULTS - TEST RUN 4
All Results Reported in Total μg

Sample Description	Front[a]	Back[b]	Mercury	Field Blank Front	Field Blank Back	Mercury Field Blank
As	14.6	<5		12.5	<5	
Se	<5	<5		<5	<5	
Cr	3.40	<3		<2	<3	
Cd	<2	<3		<2	<3	
Pb	23.0	<5		<5	6.70	
Ba	10.9	<10		<10	<10	
Be	<2	<2		<2	<2	
Ag	<10	<10		<10	<10	
Sn	<10	<10		<10	<10	
Sb	<10	<10		<10	<10	
P	103	27.7		<10	19.0	
Zn	26.0	40.6		6.15	31.2	
Co	<5	<5		<5	<5	
Ni	<5	<5		<5	<5	
B	161	14.6		<10	<10	
Mn	2.15	14.0		<2	13.3	
V	<2	<2		<2	<2	
Cu	<5	<5		<5	<5	
Hg	<0.2	<5	2.60	<0.2	<0.5	<1.0
Tl	<1.0	<1.0		<1.0	<1.0	

[a]Front half of MMT samples include the combined filter, acetone and nitric acid front washes.
[b]Back half of MMT samples include the nitric acid/peroxide impingers.

TABLE 5-45

TCLP METAL ANALYSIS RESULTS - TEST RUN 1
MPF PROCESS SAMPLES (All results in μg/mL except Mercury [μg/L])

Sample No.	Sample Description	As	Se	Cr	Cd	Pb	Ba	Be	Ag	Sn
9J-1A-69	Scrubber Liquor Pre Test	<0.05	<0.05	<0.02	<0.02	0.15	<0.10	<0.02	<0.10	<0.10
9J-1A-97	Scrubber Liquor Post Test	<0.05	<0.05	<0.02	0.053	0.99	<0.10	<0.02	<0.10	<0.10
9J-1A-75	Scrubber Brine Pre Test	0.78	0.22	1.66	0.45	8.63	0.29	<0.02	<0.10	0.38
9J-1A-103	Scrubber Brine Post Test	1.42	0.17	0.90	0.30	7.83	0.15	<0.02	<0.10	0.50
9J-1A-81	Caustic Pre Test	<0.05	<0.05	<0.02	<0.02	0.16	<0.10	<0.02	<0.10	<0.10
9J-1A-109	Caustic Post Test	<0.05	<0.05	<0.02	<0.02	0.17	<0.10	<0.02	<0.10	<0.10
9J-1A-87	Process Water Pre Test	<0.05	<0.05	<0.02	<0.02	<0.05	<0.10	<0.02	<0.10	<0.10
9J-1A-115	Process Water Post Test	<0.05	<0.05	<0.02	<0.02	<0.05	<0.10	<0.02	<0.10	<0.10
9J-1A-91	Fuel Oil Pre Test	<0.05	<0.05	<0.02	<0.02	<0.05	<0.10	<0.02	<0.10	<0.10
9J-1A-119	Fuel Oil Post Test	<0.05	<0.05	<0.02	<0.02	<0.05	<0.10	<0.02	<0.10	<0.10

Sample No.	Sample Description	Sb	Zn	Co	Ni	V	Cu	Hg	Tl
9J-1A-69	Scrubber Liquor Pre Test	<0.10	0.19	<0.05	<0.05	<0.02	0.10	<0.3	<0.010
9J-1A-97	Scrubber Liquor Post Test	<0.10	0.53	<0.05	0.059	<0.02	0.22	<0.3	<0.010
9J-1A-75	Scrubber Brine Pre Test	<0.10	6.64	<0.05	1.08	0.12	0.19	3.14	<0.40
9J-1A-103	Scrubber Brine Post Test	<0.10	5.88	<0.05	0.82	0.13	2.30	3.71	<0.40
9J-1A-81	Caustic Pre Test	<0.10	0.26	<0.05	<0.05	<0.02	<0.05	<0.8	<0.40
9J-1A-109	Caustic Post Test	<0.10	0.18	<0.05	<0.05	<0.02	<0.05	<0.8	<0.40
9J-1A-87	Process Water Pre Test	<0.10	0.15	<0.05	<0.05	<0.17	<0.05	<0.3	<0.010
9J-1A-115	Process Water Post Test	<0.10	0.13	<0.05	<0.05	<0.02	<0.05	<0.3	<0.010
9J-1A-91	Fuel Oil Pre Test	<0.10	<0.05	<0.05	0.11	<0.02	<0.05	<20	<0.010
9J-1A-119	Fuel Oil Post Test	<0.10	<0.05	<0.05	<0.05	<0.02	<0.05	<20	<0.010

TABLE 5-46

TCLP METAL ANALYSIS RESULTS - TEST RUN 2
MPF PROCESS SAMPLES (All results in μg/mL except Mercury [μg/L])

Sample No.	Sample Description	As	Se	Cr	Cd	Pb	Ba	Be	Ag	Sn
9J-3-56	Scrubber Liquor Pre Test	<0.05	<0.05	<0.02	<0.02	0.18	<0.10	<0.02	<0.10	<0.10
9J-3-84	Scrubber Liquor Post Test	<0.05	<0.05	<0.02	<0.02	0.15	<0.10	<0.02	<0.10	<0.10
9J-3-62	Scrubber Brine Pre Test	0.49	<0.05	0.10	0.10	4.03	<0.10	<0.02	<0.10	0.14
9J-3-89	Scrubber Brine Post Test	0.82	<0.05	0.07	0.09	7.48	<0.10	<0.02	<0.10	0.15
9J-3-68	Caustic Pre Test	<0.05	<0.05	<0.02	<0.02	0.15	<0.10	<0.02	<0.10	<0.10
9J-3-96	Caustic Post Test	<0.05	<0.05	<0.02	<0.02	0.14	0.13	<0.02	<0.10	0.24
9J-3-74	Process Water Pre Test	<0.05	<0.05	<0.02	<0.02	<0.05	<0.10	<0.02	<0.10	<0.10
9J-3-102	Process Water Post Test	<0.05	<0.05	<0.02	<0.02	<0.05	<0.10	<0.02	<0.10	<0.10
9J-3-78	Fuel Oil Pre Test	<0.05	<0.05	<0.02	<0.02	<0.05	<0.10	<0.02	<0.10	<0.10
9J-3-106	Fuel Oil Post Test	<0.05	<0.05	<0.02	<0.02	<0.05	<0.10	<0.02	<0.10	<0.10

Sample No.	Sample Description	Sb	Zn	Co	Ni	V	Cu	Hg	Tl
9J-3-56	Scrubber Liquor Pre Test	<0.10	0.21	<0.05	<0.05	<0.02	0.10	<0.3	<0.010
9J-3-84	Scrubber Liquor Post Test	<0.10	0.099	<0.05	<0.05	<0.02	0.058	<0.3	<0.010
9J-3-62	Scrubber Brine Pre Test	<0.10	2.20	<0.05	0.32	0.074	1.00	1.79	<0.40
9J-3-89	Scrubber Brine Post Test	<0.10	3.62	<0.05	0.33	0.090	1.80	1.82	<0.40
9J-3-68	Caustic Pre Test	<0.10	0.56	<0.05	<0.05	<0.02	0.24	<0.8	<0.40
9J-3-96	Caustic Post Test	<0.10	0.48	<0.05	<0.05	<0.02	0.24	<0.8	<0.40
9J-3-74	Process Water Pre Test	<0.10	0.50	<0.05	<0.05	<0.02	<0.05	<0.3	<0.010
9J-3-102	Process Water Post Test	<0.10	0.09	<0.05	<0.05	<0.02	<0.05	<0.3	<0.010
9J-3-78	Fuel Oil Pre Test	<0.10	<0.05	<0.05	<0.05	<0.02	<0.05	<20	<0.010
9J-3-106	Fuel Oil Post Test	<0.10	<0.05	<0.05	<0.05	<0.02	<0.05	<20	<0.010

TABLE 5-47

TCLP METAL ANALYSIS RESULTS - TEST RUN 3[a]
MPF PROCESS SAMPLES (All results in μg/mL except Mercury [μg/L])

Sample No.	Sample Description	As	Se	Cr	Cd	Pb	Ba	Be	Ag	Sn
9J-3-84	Scrubber Liquor Pre Test	<0.05	<0.05	<0.02	<0.02	0.15	<0.10	<0.02	<0.10	<0.10
9J-4-53	Scrubber Liquor Post Test	<0.05	<0.05	<0.02	<0.02	0.10	<0.10	<0.02	<0.10	<0.10
9J-3-89	Scrubber Brine Pre Test	0.82	<0.05	0.07	0.09	7.48	<0.10	<0.02	<0.10	0.15
9J-4-59	Scrubber Brine Post Test	0.61	0.14	<0.02	0.11	6.43	<0.10	<0.02	<0.10	0.68
9J-3-96	Caustic Pre Test	<0.05	<0.05	<0.02	<0.02	0.14	0.13	<0.02	<0.10	0.24
9J-4-65	Caustic Post Test	<0.05	<0.05	<0.02	<0.02	0.13	<0.10	<0.02	<0.10	<0.10
9J-3-102	Process Water Pre Test	<0.05	<0.05	<0.02	<0.02	<0.05	<0.10	<0.02	<0.10	<0.10
9J-4-71	Process Water Post Test	<0.05	<0.05	<0.02	<0.02	<0.05	<0.10	<0.02	<0.10	<0.10
9J-3-106	Fuel Oil Pre Test	<0.05	<0.05	<0.02	<0.02	<0.05	<0.10	<0.02	<0.10	<0.10
9J-4-75	Fuel Oil Post Test	<0.05	<0.05	<0.02	<0.02	<0.05	<0.10	<0.10	<0.10	<0.10

Sample No.	Sample Description	Sb	Zn	Co	Ni	V	Cu	Hg	Tl
9J-3-84	Scrubber Liquor Pre Test	<0.10	0.099	<0.05	<0.05	<0.02	0.058	<0.3	<0.010
9J-4-53	Scrubber Liquor Post Test	<0.10	0.16	<0.05	<0.05	0.02	0.054	<0.3	<0.010
9J-3-89	Scrubber Brine Pre Test	<0.10	3.62	<0.05	0.33	0.090	1.80	1.82	<0.40
9J-4-59	Scrubber Brine Post Test	<0.10	3.48	<0.05	0.34	0.076	1.96	0.39	<0.40
9J-3-96	Caustic Pre Test	<0.10	0.48	<0.05	<0.05	<0.02	0.24	<0.8	<0.40
9J-4-65	Caustic Post Test	<0.10	<0.05	<0.05	<0.05	<0.02	<0.05	<0.8	<0.40
9J-3-102	Process Water Pre Test	<0.10	0.09	<0.05	<0.05	<0.02	<0.05	<0.3	<0.010
9J-4-71	Process Water Post Test	<0.10	0.43	<0.05	<0.05	0.31	0.22	<0.3	<0.010
9J-3-106	Fuel Oil Pre Test	<0.10	<0.05	<0.05	<0.05	<0.02	<0.05	<20	<0.010
9J-4-75	Fuel Oil Post Test	<0.10	<0.05	<0.05	<0.05	<0.02	<0.05	<20	<0.010

[a]Because Test Run 3 started immediately upon completion of Test Run 2, the post test samples for Test Run 2 are the pre test samples for Test Run 3. (See Memorandum of Understanding)

TABLE 5-48

TCLP METAL ANALYSIS RESULTS - TEST RUN 4
MPF PROCESS SAMPLES (All results in μg/mL except Mercury [μg/L])

Sample No.	Sample Description	As	Se	Cr	Cd	Pb	Ba	Be	Ag	Sn
9J-5-64	Scrubber Liquor Pre Test	<0.05	<0.05	<0.02	<0.02	0.09	<0.10	<0.02	<0.10	<0.10
9J-5-92	Scrubber Liquor Post Test	<0.05	<0.05	<0.02	<0.02	<0.05	<0.10	<0.02	<0.10	<0.10
9J-5-70	Scrubber Brine Pre Test	0.21	<0.05	<0.02	0.06	1.06	<0.10	<0.02	<0.10	<0.10
9J-5-98	Scrubber Brine Post Test	0.38	<0.05	<0.02	0.15	2.14	<0.10	<0.02	<0.10	0.26
9J-5-76	Caustic Pre Test	<0.05	<0.05	<0.02	<0.02	<0.05	<0.10	<0.02	<0.10	<0.10
9J-5-104	Caustic Post Test	<0.05	<0.05	<0.02	0.03	0.13	<0.10	<0.02	<0.10	0.26
9J-5-82	Process Water Pre Test	<0.05	<0.05	<0.02	<0.02	<0.05	<0.10	<0.02	<0.10	<0.10
9J-5-110	Process Water Post Test	<0.05	<0.05	<0.02	<0.02	<0.05	<0.10	<0.02	<0.10	<0.10
9J-5-86	Fuel Oil Pre Test	<0.05	<0.05	<0.02	<0.02	<0.05	<0.10	<0.02	<0.10	<0.10
9J-5-114	Fuel Oil Post Test	<0.05	<0.05	<0.02	<0.02	<0.05	<0.10	<0.02	<0.10	<0.10

Sample No.	Sample Description	Sb	Zn	Co	Ni	V	Cu	Hg	Tl
9J-5-64	Scrubber Liquor Pre Test	<0.10	0.11	<0.05	<0.05	<0.02	0.059	<0.3	<0.010
9J-5-92	Scrubber Liquor Post Test	0.26	0.20	<0.05	<0.05	<0.02	<0.05	<0.3	<0.010
9J-5-70	Scrubber Brine Pre Test	<0.10	0.58	<0.05	0.05	0.048	0.25	0.70	<0.40
9J-5-98	Scrubber Brine Post Test	<0.10	1.56	<0.05	0.18	0.056	0.96	<0.3	<0.40
9J-5-76	Caustic Pre Test	<0.10	<0.05	<0.05	<0.05	<0.02	<0.05	<0.8	<0.40
9J-5-104	Caustic Post Test	<0.10	0.58	<0.05	<0.05	<0.02	<0.05	<0.3	<0.40
9J-5-82	Process Water Pre Test	<0.10	0.15	<0.05	<0.05	<0.02	<0.05	<20	<0.010
9J-5-110	Process Water Post Test	<0.10	0.04	<0.05	<0.05	<0.02	<0.05	<20	<0.010
9J-5-86	Fuel Oil Pre Test	<0.10	<0.05	<0.05	<0.05	<0.02	<0.05	<0.003	<0.010
9J-5-114	Fuel Oil Post Test	<0.10	0.09	<0.05	<0.05	<0.02	<0.05	<0.003	<0.010

The results of the analyses of the MPF ash composite TCLP extracts are given in Table 5-49. No detectable concentration of As, Se, Be, Ag, Sb, Hg or Tl was found in any of the samples. None of the TCLP metals found in quantifiable concentrations (Cr, Cd, Pb, Ba) were present in concentrations more than 65% of the regulatory limit. Even though no regulatory limit exists for the remaining metal, the quantities found were generally small, with most samples being near the detection limit.

Example Calculations are given below:

MMT Front Half:

The final volume for MMT front halves is 100 mL. If a sample gives an ICP result for Cu of 1.25 μg/mL, then total μg Cu = 1.25 μg/mL x 100 mL = 125 μg.

MMT Back Half:

Back half ICP results are corrected for the fraction removed for mercury analysis. If the total original sample volume is 600 mL, then 100 mL is removed for mercury analysis, and the remaining 500 mL is reduced to a final volume of 100 mL during digestion. If the ICP result for Cu is 1.24 μg/mL, then total Cu = 1.24 μg/mL x 100 mL x $\frac{600}{500}$ = 149 μg.

MMT Mercury:

Mercury results by cold vapor-AA are expressed as the weight (in μg) of mercury in the total original volume of the sample. All mercury standards are made up to 100 mL volume, and thus an aliquot of similar volume is taken from the actual sample. If a 100-mL aliquot is removed from a 600-mL sample and gives a result of 1.2 μg/L, then total μg Hg = 1.2 μg/L x 0.6 L = 0.72 μg Hg.

Matrix Spikes and Spike Duplicates:

Spike recoveries are calculated by:

$$\% \text{ Recovery} = \frac{\text{Conc. of spiked sample} - \text{Conc. of unspiked sample}}{\text{Spike conc. level}} \times 100\%$$

Process Samples:

Element concentrations in process samples are determined with the use of linear-regression analysis, which is normally performed by the ICP and printed in report form. Mercury linear-regression analyses were hand-calculated and are documented in SRI notebooks.

5.8 REACTIVITY AND pH ANALYSIS

The pH levels of the process samples were measured with a pH electrode, in the SRI laboratory. The caustic solution contained approximately 23% NaOH, and the pH values for these samples were, therefore, always at the upper limit of the meter (>13.5).

TABLE 5-49

METALS IN THE TON CONTAINER RESIDUE/ASH
All Results Reported in μg/mL

Sample	9J-1A-123	9J-3-144	9J-4-70	9J-4-82	9J-5-118	
Test Run	1	2	3	3	4	
Container No(s).[a]	21,22,34,35	39,40,45,46	41,42,47,52	44	55,56,57,58	TCLP Blk.
As	<0.2	<0.1	<0.2	<0.2	<0.1	<0.1
Se	<0.1	<0.2	<0.2	<0.2	<0.1	<0.1
Cr	0.77	<0.05	<0.05	1.30	1.99	0.13
Cd	0.44	<0.05	0.07	0.55	0.27	<0.05
Pb	0.68	3.22	0.37	1.85	1.12	<0.1
Ba	0.18	<0.1	<0.1	0.13	<0.1	<0.1
Be	<0.05	<0.05	<0.05	<0.05	<0.05	<0.05
Ag	<0.1	<0.1	<0.1	<0.1	<0.1	<0.1
Sn	<0.1	<0.1	<0.1	0.10	<0.1	<0.1
Sb	<0.05	<0.05	<0.05	<0.05	<0.05	<0.05
Zn	2.54	0.42	0.10	0.61	0.11	<0.05
Co	1.30	0.95	1.33	1.07	1.58	<0.05
Ni	0.30	0.40	0.48	0.68	0.64	<0.05
V	0.82	0.43	0.19	1.09	0.62	<0.05
Cu	0.31	0.06	0.43	<0.05	<0.05	<0.05
Hg	<0.0005	<0.0005	<0.0005	<0.0005	<0.0005	<0.0005
Tl	<0.01	<0.01	<0.01	<0.01	<0.01	<0.01

[a]Sample was a composite of ash from listed containers.

The reactivity of the scrubber liquids and ash was measured by Environmental Services Laboratory of Birmingham, AL. The method for cyanide was SW-846 Method 9010 and the method for sulfide was SW-846 Method 9030. No cyanide was found in any samples. The levels of sulfide detected were below the levels indicative of a reactive waste.

Table 5-50 shows the results of reactivity and pH analysis of solid and liquid process samples.

5.9 PARTICULATE MEASUREMENTS

5.9.1 Mass Flow

Measurements of particle concentrations were made on samples from the MMT and M5AT. The acetone probe rinse and the filter from each run were dried to a constant weight before they were analyzed. The trains passed all required pre test and post test leak checks of the pitot tube and sampling system.

Particulate concentrations (corrected to 7% O_2) in the four MPF test runs were, respectively, 13.4, 3.10, 4.66 and 0.54 mg/dscm from the M5AT results and 8.45, 2.25, 1.59 and 1.22 mg/dscm from the MMT results. Hence, the MPF particulate emission levels were well below the RCRA particulate limit of 180 mg/dscm at an oxygen content of 7% in the stack. The corresponding measured particulate concentrations after correction of the data to 12% CO_2 (this is not a RCRA requirement but is required as an alternative manner of reporting particulate results by certain state agencies) were 16.3, 3.83, 5.63 and 0.62 mg/dscm from the M5AT and 10.4, 2.74, 1.94 and 1.44 mg/dscm from the MMT.

5.9.2 Particle Size Distribution

Only one particle-size distribution measurement was made. The weight gains in each stage of the impactor were checked after the first of the four test runs and, because of very low particulate concentrations, were found to be too low to be reliably measured. This meant that reliable weights for the several size fractions could be obtained only by continuing one sample through all four test runs. Consequently, the collection substrates were reloaded into the impactor, and a single sample was accumulated through all four test runs. Figure 5-5 shows the size distributions in a differential mass distribution format (dM/dLogD vs. Dia.). This format shows the concentration at each particle size versus size, with the area under the curve between two sizes equalling the total concentration over the size interval. Figure 5-6 shows the average distribution on a cumulative-percentage-by-mass-less-than-size basis. The overall mass median diameter of the particulate matter was approximately 0.4 µm. However, the distribution was distinctly bimodal, with about 70% of the particulate matter in a mode centered at approximately 0.2 µm and the remaining 30% in a mode centered at about 10 micrometers. Detailed results can be found in Appendix D.

Formulas and nomenclature for particulate concentrations and emission rates are given in Appendix D.

TABLE 5-50

REACTIVITY AND pH

Test Run	Sample Description	Sample No.	Reactivity[a] Cyanide	Reactivity[a] Sulfide	pH
1	Scrubber Liquor Pre Test	9J-1A-070	<0.05	2.00	9.08
	Scrubber Liquor Post Test	9J-1A-098	<0.05	8.00	9.41
	Brine Pre Test	9J-1A-075	<0.05	<0.50	9.17
	Brine Post Test	9J-1A-103	<0.05	<0.50	9.01
	Process Water Pre Test	9J-1A-087	[b]	[b]	8.04
	Process Water Post Test	9J-1A-115	[b]	[b]	6.97
	MPF Ton Container Residue	9J-1A-123	<0.05	24.00	[c]
2	Scrubber Liquor Pre Test	9J-3-057	<0.05	2.00	9.28
	Scrubber Liquor Post Test	9J-3-085	<0.05	2.00	8.90
	Brine Pre Test	9J-3-062	<0.05	2.00	9.40
	Brine Post Test	9J-3-091	<0.05	<0.50	9.43
	Process Water Pre Test	9J-3-074	[b]	[b]	7.94
	Process Water Post Test	9J-3-102	[b]	[b]	7.29
	MPF Ton Container Residue	9J-3-145	<0.05	32.00	[c]
3	Scrubber Liquor Pre Test[d]	9J-3-085	<0.05	2.00	8.90
	Scrubber Liquor Post Test	9J-4-054	<0.05	2.00	8.82
	Brine Pre Test[d]	9J-3-091	<0.05	<0.50	9.43
	Brine Post Test	9J-4-059	<0.05	<0.50	9.33
	Process Water Pre Test[d]	9J-3-102	[b]	[b]	7.29
	Process Water Post Test	9J-4-071	[b]	[b]	8.11
	MPF Ton Container Residue	9J-4-079	<0.05	8.00	[c]
4	Scrubber Liquor Pre Test	9J-5-065	<0.05	<0.05	8.78
	Scrubber Liquor Post Test	9J-5-093	<0.05	2.00	8.53
	Brine Pre Test	9J-5-071	<0.05	62.00	8.96
	Brine Post Test	9J-5-097	<0.05	<0.50	8.58
	Process Water Pre Test	9J-5-082	[b]	[b]	6.14
	Process Water Post Test	9J-5-110	[b]	[b]	7.63
	MPF Ton Container Residue	9J-5-118	<0.05	32.00	[c]

[a]In mg/L for liquids; mg/kg for solids.
[b]Reactivity not determined.
[c]pH not determined.
[d]Post test results from Test Run 2 are the pre test results for Test Run 3.

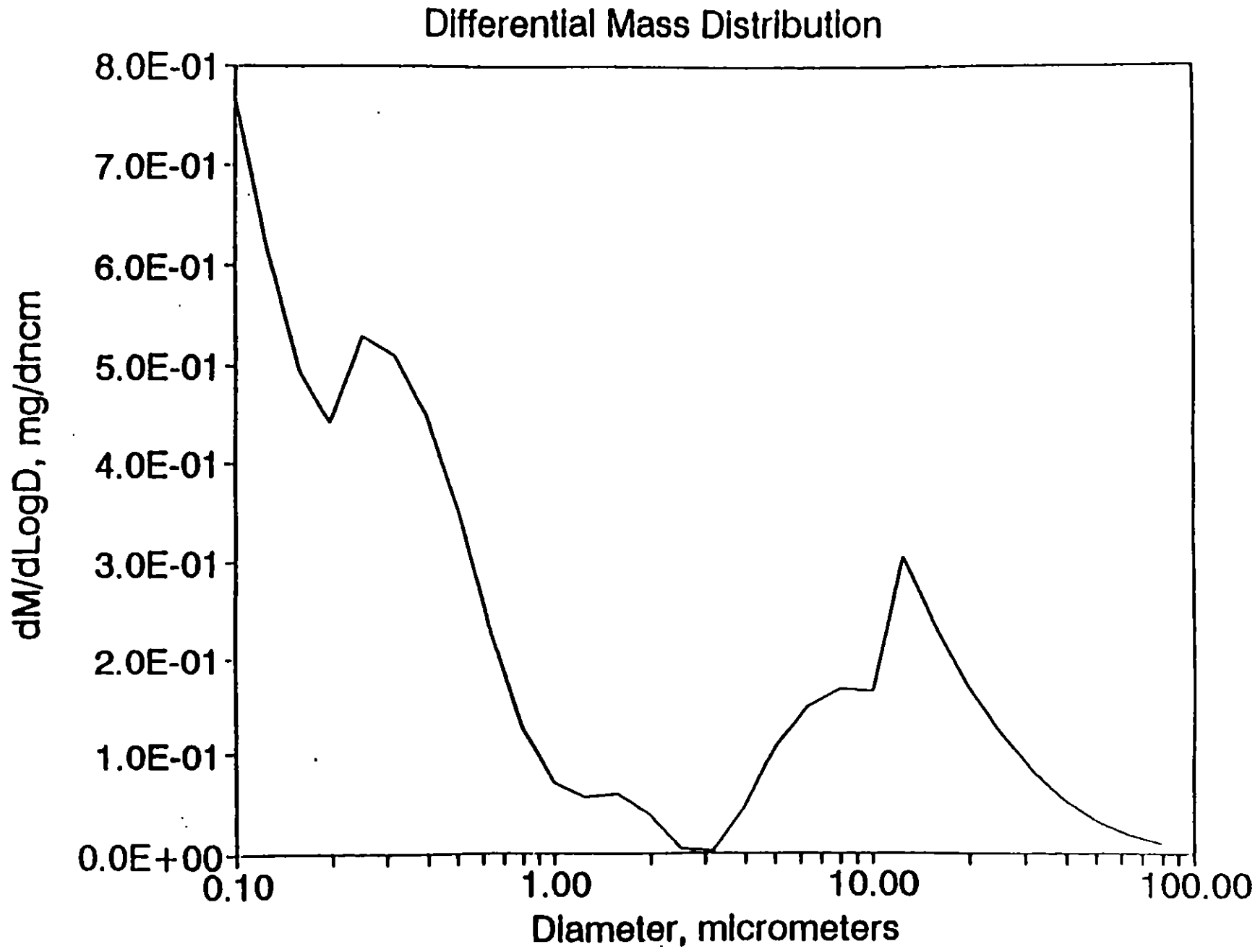

Figure 5-5

Differential Mass Size Distribution for MPF HD Test Runs 1 Through 4

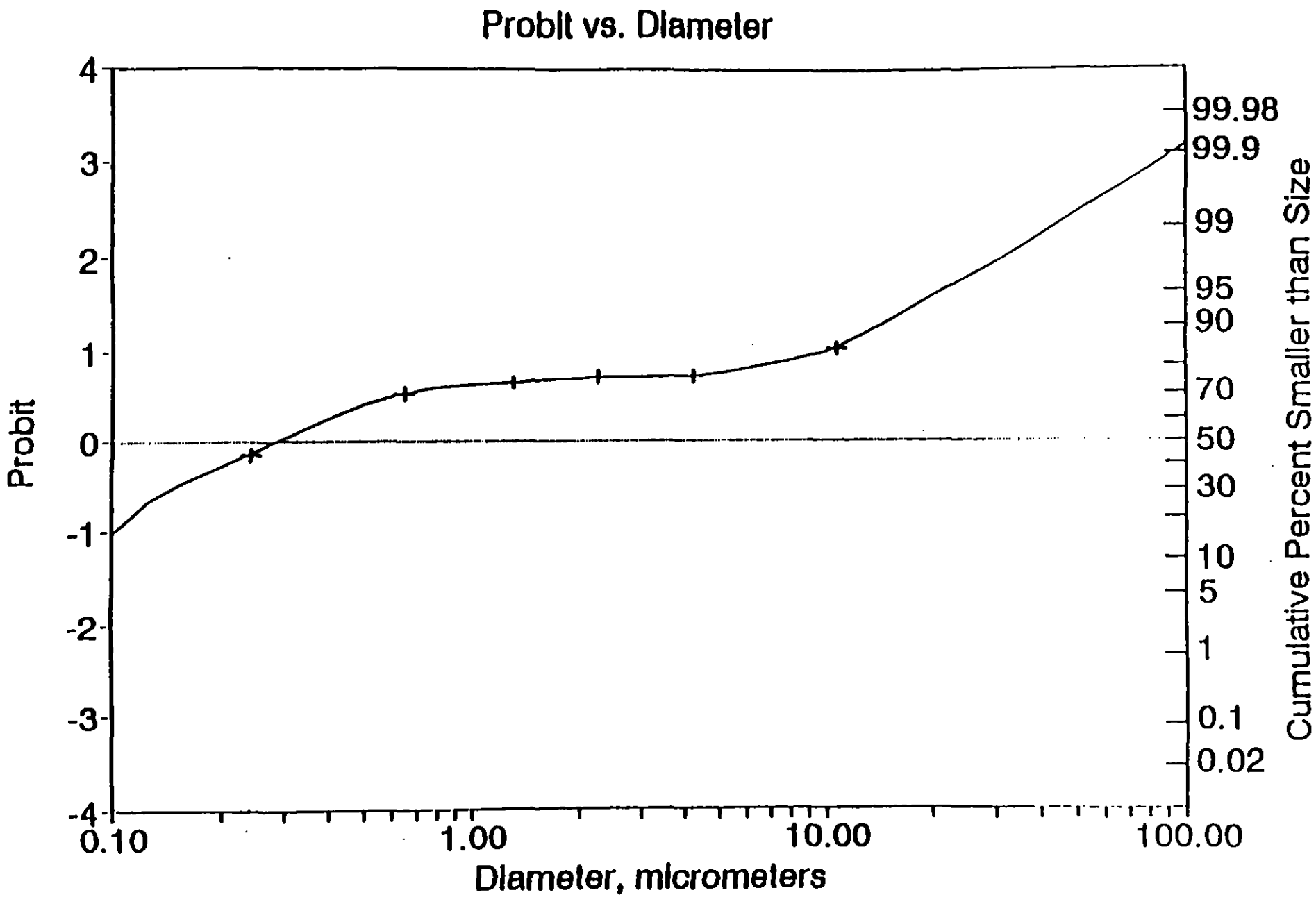

Figure 5-6

Particle Size Distribution on Cumulative Percent by Mass Smaller than Size · MPF HD Test Runs 1-4

5.10 CHEMICAL AGENT - POHC

5.10.1 Results

The primary waste feed for this trial burn was HD filled ton containers. After punching and draining, the residual liquid agent left in the containers was measured. The POHC for this trial burn was the residual agent. The permitted trial burn limit for residual agent in HD ton containers is 146.2 lb/hr. During these test runs, residual agent was also limited to 73.1 lbs/ container.

Since the MPF incinerator is a batch feed operation, expressing the waste feed rate based on an average rate is not truly representative of the actual operating conditions. Based on recommendations made by EPA personnel observing the MPF trial burn, a modified approach to determine the Agent HD feed rate was utilized.

This approach uses the HD agent thermal evaporation behavior to approximate the waste feed rate. To determine the rate of evaporation a graph is constructed, where the abscissa is the test run time, in minutes, and the ordinate is the evaporation rate. Assuming that all of the agent is evaporated during the design residence time for the MPF primary chamber, under normal operating conditions of 100 minutes (zone 1 = 38 min., zone 2 = 38 min, zone 3 = 24 minutes), the evaporation rate vs. time for each container, is plotted as a triangular shape curve with the apex at time equal to 50 minutes after the container is fed to the MPF. The maximum evaporation rate (ordinate value of the apex) is equal to the total residual agent (lb.) divided by 50 minutes. Thus the area under the curve is the total residual agent in that container.

By including containers fed to the MPF prior to the start of sampling and those fed just before sampling stopped, along with all containers fed during sampling, the partial contributions from each are included. A curve of total evaporation (feed) rate vs. time is determined by summing the ordinate values of the curves for each individual container. Figures 5-7 through 5-9 show the results of this calculation for Test Runs 1 through 4. The maximum agent feed rate can then be used in the determination of DRE.

By this method, the maximum feed rate for the four test runs was determined to range from 54 to 114 lb/hr, as shown in Table 5-51. Despite redundant ACAMS, no agent was detected in the stack gas. The detection limits at the stack ACAMS station, at all times during the four test runs were, respectively, 0.0054, 0.0066, 0.0069 and 0.0066 mg/m^3. These detection limits are determined from the daily ACAMS challenge data, which can be found in Appendix E.

All process samples were certified by SwRI to contain less than 200 parts per billion (ppb) of HD.

5.10.2 Destruction and Removal Efficiency

Destruction and Removal Efficiency (DRE) is one of the three fundamental RCRA performance standards mandated for hazardous waste incinerators. All RCRA regulated hazardous waste incinerators must achieve at least 99.99% DRE for the POHC identified in the incinerator waste feed stream. Agent HD was used as the POHC for the MPF trial burn. DRE is a straight forward calculation using the following formula:

Figure 5-7
Calculated Feed Rate For MPF Test #1

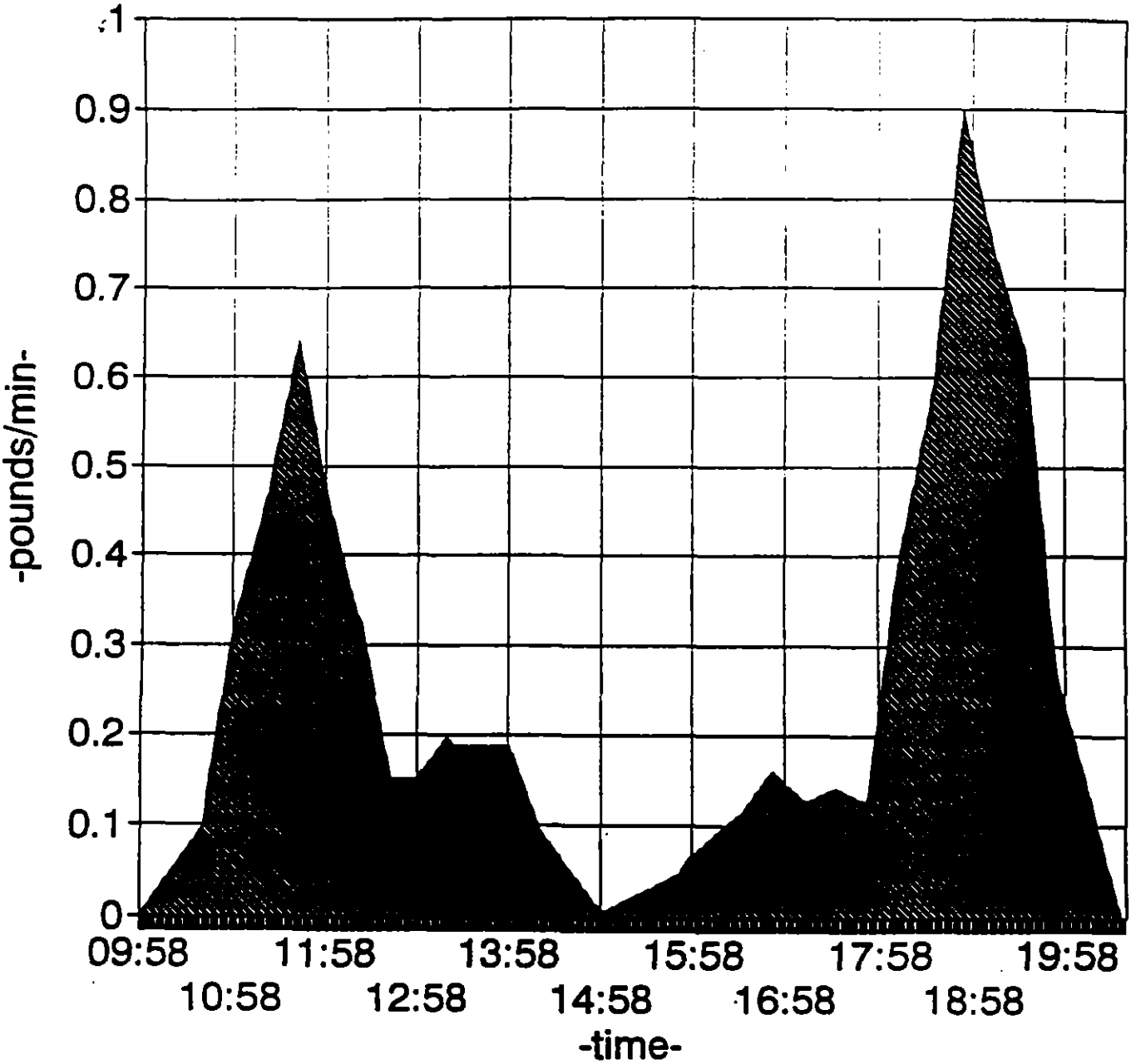

Figure 5-8
Calculated Feed Rates For MPF Run #2,#3

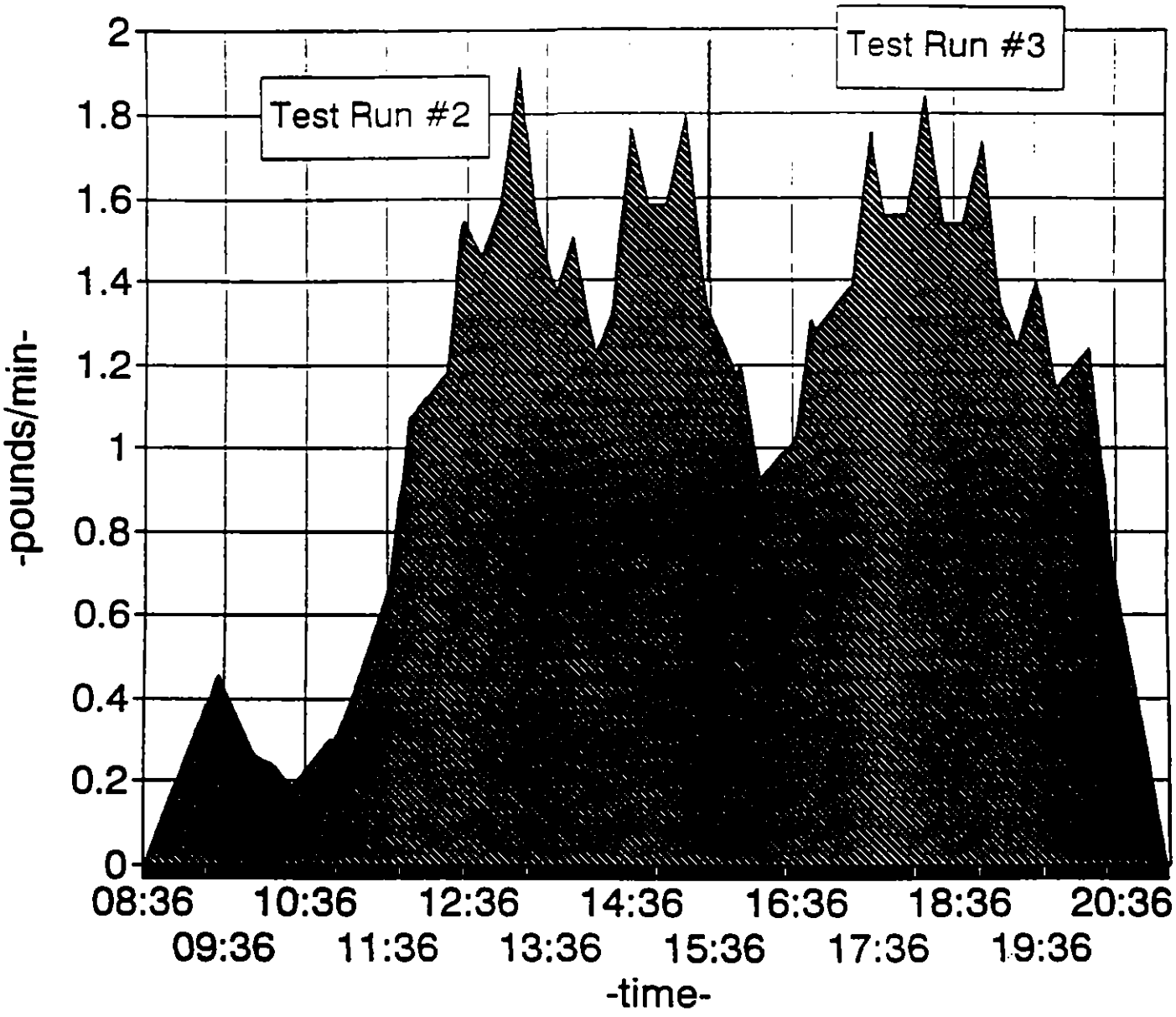

Figure 5-9
Calculated Feed Rate For MPF Test #4

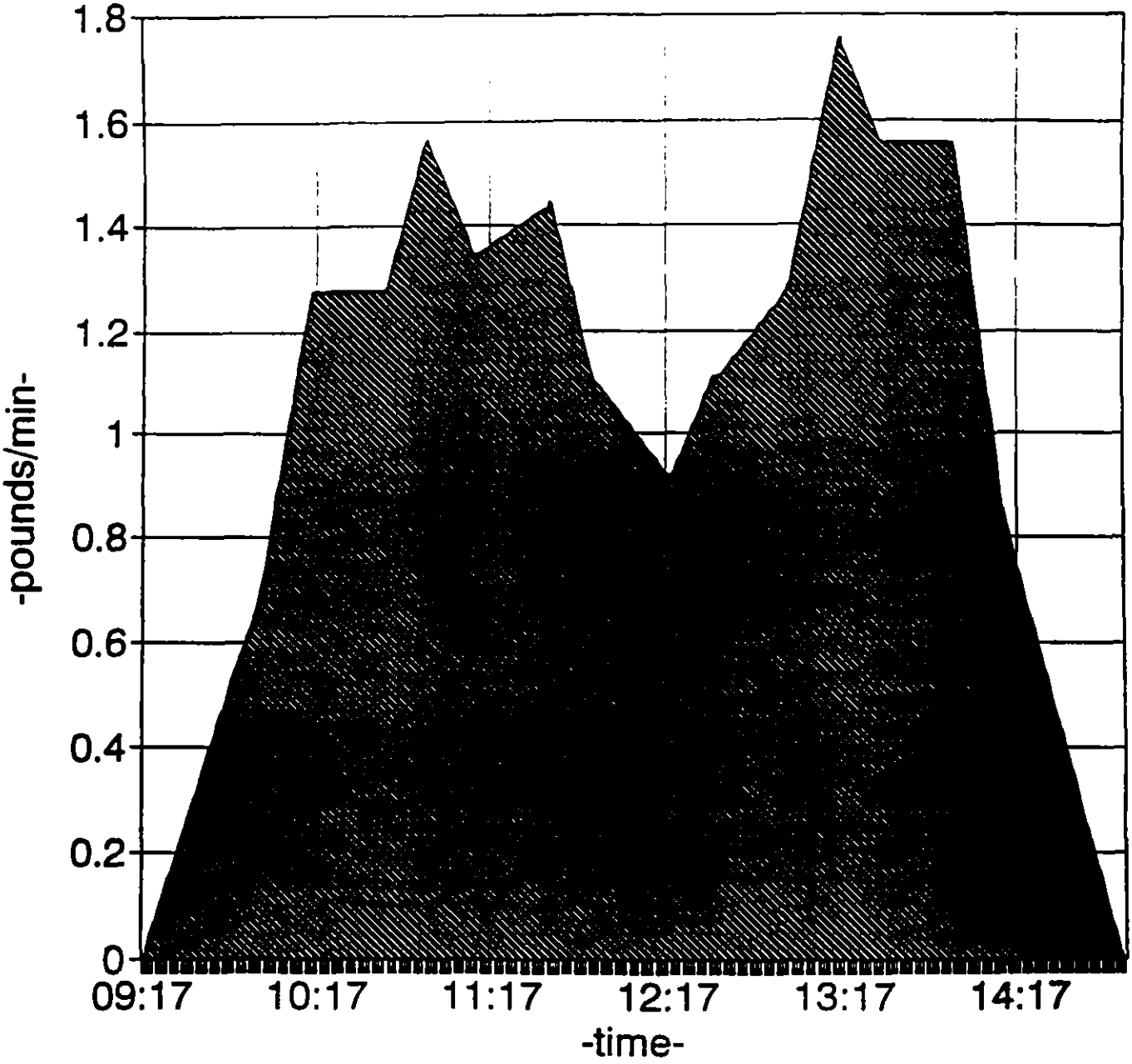

TABLE 5-51

MPF AGENT FEED RATE AND DRE

	Test Run			
	1	2	3	4
Maximum Agent Feed (lb/hr)	54	114	111	105
HD at LOQ				
mg/m^3	<0.0054	<0.0066	<0.0069	<0.0066
10^{-9} lb/ft^3	<0.337	<0.412	<0.431	<0.412
Average Gas Flow				
acfm	11,338	11,918	11,801	11,772
10^6 acfh	0.68	0.72	0.71	0.71
Upper Limit of HD Emission (lb/hr)	<0.000230	<0.000295	<0.000305	<0.000291
DRE %	>99.999574	>99.999745	>99.999725	>99.999723

$$DRE = \frac{W_{(in)} - W_{(out)}}{W_{(in)}} \times 100\%$$

Where $W_{(in)}$ is the quantity of Agent HD in the hazardous waste fed into the system and $W_{(out)}$ is the emission rate of Agent HD measured in the stack gas prior to release to the atmosphere.

Agent HD is continuously monitored in the stack gases and is expressed as a concentration in the total exhaust stream (i.e., part per million). Other monitoring systems measure the total flow of exhaust gases and based on these values the Agent HD mass emission [$W_{(out)}$] in the stack gases for the trial run can be determined.

Stack concentrations of Agent HD were not detected during any of the four test runs. However, in order to be able to calculate the DRE, a valid means of quantifying an emission value must be employed. The MPF stack was monitored by ACAMS at both the stack house and in the blower duct. The sensitivity (Limit of Quantification) of the HD ACAMS monitoring system was approximately one fifth of the ASC (0.03 mg/m^3) for HD in all four test runs. Based on this level of capability, the actual level of HD that could have been detected was below 0.006 mg/m^3. Knowing that the system did not alarm during the test runs, the stack concentration must have always been below this value. Using the specific LOQ based emission rate as a maximum concentration value of HD in the stack gas, a relative hourly emission rate can be calculated based on the stack flow. Using Test Run #1 data:

HD maximum emission $<0.0054 mg/m^3$
Calculated stack flow = 11,338 acfm (Avg. of M5AT & MMT)
Calculated agent feed rate = 54 lb/hr

Hourly emission $< (0.0054 mg/m^3) \times (1 \times 10^{-3}\ g/mg) \times (lb/4.54 \times 10^{-3} g) \times (m^3/35.31 ft^3) \times (11{,}338\ acfm) \times (60\ min/hr)$

Hourly emission $< (2.3 \times 10^{-4}\ lb/hr)$

Using this hourly emission to calculate DRE:

$$DRE > \frac{54\ lb/hr - (2.3 \times 10^{-4}\ lb/hr)}{54\ lb/hr} \times 100\%$$

$DRE > 99.999574$

The same approach, using test run specific data, was used to calculate the DRE for each of the remaining three test runs. Only ton containers fed or resident during periods of active sampling were considered to contribute to the waste loading of the MPF system. Results of the DRE determination are shown in Table 5-51.

5.11 TOTAL HYDROCARBONS

Total hydrocarbons (THC) in the stack gas were determined by EPA Method 25A. The results are presented in Table 5-52.

This data was taken to characterize the emissions. It is not subject to any regulatory limits.

TABLE 5-52

MPF TOTAL HYDROCARBONS IN STACK GAS
(Expressed as Propane)

Test Run	Gas Stream Monitor (ppm)	Condensate (ppm)	Total (ppm)	Emission Rate (lb/hr)
1	2.0	0.17	2.17	0.166
2	2.0	1.17	3.17	0.255
3	2.0	0.41	2.41	0.147
4	2.0	0.82	2.82	0.224

6.0 QUALITY ASSURANCE AND QUALITY CONTROL

6.1 BACKGROUND

Assuring valid results in a sampling and analysis program of the type carried out here requires that a thorough QA/QC program be followed. Such a QA/QC program was followed in all laboratory functions that pertained to the chemical analyses performed in this program. Typical QA/QC methods are instrument and sampling-system calibrations, initial and continuing instrument-calibration verifications, sample preservation and identification, replicate samples and analyses, analysis of blank samples, matrix spikes, and surrogates (where appropriate), and maintaining complete chain-of-custody documentation for all samples. Details regarding the QA/QC programs implemented by each participant can be found in Appendix G (SRI Analytical Test Plan). Results of the QA/QC activities are provided in several other appendices and are summarized below.

As a routine QA/QC procedure, the laboratory analyzed both blank and spiked samples. The blank samples included method blanks (laboratory reagents), field blanks, and trip blanks. Blanks were prepared according to the appropriate methods and procedures. An extraction blank was prepared for each day of extractions. A blank was analyzed each day after the daily calibration check and before the analysis of samples for volatile organics. The spiked samples consisted of matrix spikes, matrix spike duplicates, and spikes according to EPA-certified methods appropriate for the specific analytes that were determined and quantified in this work. The blank samples were used to detect any contamination that may have been introduced in the field or the laboratory and to establish background values that could be used to adjust or correct routine analytical results.

Matrix-spiked and duplicate matrix-spiked samples were also prepared by the applicable methods. Each process sample matrix (water, caustic, liquor brine) had associated with it a matrix spike and a matrix spike duplicate that was prepared from one of the sets of samples. The matrix spikes were used to check the performances and the recovery efficiencies of the various analytical methods used in this work. The post-test process-residue samples from Run 2 were used for preparing most process-sample matrix spikes and matrix spike duplicates. The matrix spike and matrix spike duplicate analyses were performed in connection with the determinations of volatile organics, semivolatile organics, PCBs, PCDD/F, and metals. Also, internal standards and surrogate standards were used in all organics analyses. Moreover, the reagents used to prepare the M5AT were spiked with chloride at three levels to measure recovery, and the MM5s were spiked with one dioxin and two other chlorinated compounds prior to sampling to monitor train retention. In addition, blank MM5s, M5ATs, and MMTs that were open to ambient air were assembled and then disassembled. After rinsing these trains and collecting the rinses, all extracts and components (filter, sorbent, etc.) were sent to the laboratory for analysis. The resulting information was used to identify contamination associated with the recovery operation. The blank data were reported with the sample sheets; spikes and duplicates were as indicated below. The appendices covering each type of sample relate which blanks and standards were analyzed with each sample.

The precision of the analyses was measured by preparing and analyzing several kinds of spikes and duplicates for all sample types. The surrogates and analytes used for spiking were chosen from among those that were suggested in the methods in SW-846. For each method and matrix, the difference between the two duplicate

analyses (matrix spike and matrix spike duplicate) results was used to estimate the precision of the analysis, and the average spike recovery was used to estimate the bias of the analysis. The surrogate spikes, which were authentic standards that were added to every sample prior to sample processing and analysis, were used to provide QC on every sample by constantly monitoring for unusual matrix effects and gross sample-processing errors. The surrogate standards were compounds that were not likely to be found in the matrix.

VOA and VOST samples were shipped to SRI promptly enough that the analyses of the samples could be completed within two weeks of sample collection. Other samples were shipped as rapidly as DOT regulations allowed and were analyzed promptly. Samples that required refrigeration were shipped in ice chests and packed with blue ice to maintain a temperature of 4°C.

Chain-of-custody (COC) was maintained for the samples according to the QA Project Plan included in the Trial Burn Test Plan (Appendix G). These procedures required that samples be recorded on sample-custody tracking sheets and that these sheets be transferred, signed, and dated when samples were transferred from one individual to another. The COC documentation is contained in Appendix A. The procedures also required that the custodian maintain possession of the samples or that they be stored under secure conditions.

6.2 SEMIVOLATILE ORGANIC ANALYSIS

The stack-gas QA/QC samples included a train blank that consisted of an entire MM5; field blanks that consisted of a filter, an XAD-2 sorbent trap, and all reagents required for the train assembly; an XAD-2 trip blank; and a laboratory blank for each matrix and for each day that samples were prepared.

The XAD-2 sorbent was treated with methylene chloride according to SW-846 Method 0010. After the extraction, the methylene chloride was analyzed by GC/MS to verify that the sorbent was contaminant-free prior to preparing the sorbent cartridges.

Before being shipped to the field, the XAD-2 sorbent traps were spiked with 114 μg of 2,4-dichlorophenol-d_3, 205 μg of 1,2,4-trichlorobenzene-d_3, and 2 ng of 2,3,7,8-tetrachlorodibenzo-p-dioxin-Cl_4. These spikes were used to indicate the recovery of chlorinated acids, neutrals, and dioxins from the sample trains.

The recoveries for the MM5 semivolatile field spikes are given in Table 6-1. Two samples (the trip blank and the train from Run 3) exhibited low recoveries. Run 3 resin extract yielded low extraction recoveries for the field spikes and the first four surrogate compounds indicating that losses during sample concentrations may have occurred. The low recoveries in the trip blank were due to interference from a massive unknown peak. Recoveries of extraction surrogates from the trip blank were similar to those from other MM5 resin extracts. The interfering peak may have been caused by contamination. However, the recovery of most of the extraction surrogates indicate that target compounds present in the trip blank would have been detected. All other recoveries ranged from 90%-138% for the field spikes.

TABLE 6-1

RECOVERIES OF 9J RESIN FIELD SPIKES

Sample Description		Surrogate 1			Surrogate 2		
		µg Spiked	µg Found	% Recovery	µg Spiked	µg Found	% Recovery
Trip Blank*	HO1899	114	9.1	8.0	205	2.1	1.0
Blank Train Resin	HO1879	114	157.0	137.7	205	283.0	138.0
Run 1 Train Resin	HO1882	114	125.0	109.6	205	198.0	96.6
Run 2 Train Resin	HO1887	114	122.0	107.0	205	187.0	91.2
Run 3 Train Resin	HO1886	114	6.58	3.1	205	3.1	1.5
Run 4 Train Resin	HO1884	114	143.0	125.4	205	229.0	111.7

* Chromatogram contained interfering peaks.

Surrogate 1 = 1,2-Dichlorophenol-d3
Surrogate 2 = 1,2,4-Trichlorobenzene-d3

Recoveries of the spikes used to quantitate extraction efficiencies for semivolatile compounds from the MM5 trains are indicated on the data sheets in Appendix J, along with similar information for process liquids and ash samples. Surrogates were not spiked into the fuel oil samples because of the large dilution required.

Most surrogate recoveries were within acceptable limits. However, several samples yielded low recoveries of one or more surrogate. Recoveries of the acid surrogates in the caustic samples were very low due to the extremely high pH of the caustic which caused degradation of the acidic compounds. Two of the base-neutral surrogates (nitrobenzene-d_5 and 2-fluorobiphenyl) were below acceptable limits in all of the TCLP ash samples including the TCLP blank. The most volatile acid surrogate (2-fluorophenol) yielded very low recoveries in all of the MM5 train samples and some of the process liquids samples (scrubber liquor and brine). Spiking errors accounted for low acid surrogate recoveries in Run 2 process water and low base-neutral surrogates recoveries in lab blank #4.

Matrix spike and matrix spike duplicate results for the process liquids and ash samples are also listed in Appendix J. Recoveries were very low for the acid matrix spikes in the caustic samples. The extremely high pH of these samples caused degradation of the surrogate and matrix spike compounds.

Table 6-2 shows the concentrations of semivolatile compounds found in the process sample blanks. Table 6-3 indicates levels of target compounds found in the blanks for the MM5. Several of the laboratory and MM5 blanks contained significant levels of phthalates. These compounds are common plasticizers and although efforts are made to reduce contamination some can be expected. The unusually high levels in lab blanks 1 and 2 indicate that any bis(2-ethylhexyl)phthalate in associated samples is questionable.

6.3 VOLATILE ORGANIC ANALYSIS

The QC samples for the volatiles analyses included blanks (each 12 hour shift), surrogates (each sample), and matrix spike/matrix spike duplicates (each matrix except VOST). The VOST tubes were conditioned for a minimum of 16 hours at 180°C under a flow of pre-purified nitrogen. Two sets of tubes from each batch were then analyzed to confirm that no interfering compounds were present.

Internal standards and surrogates were added to all samples immediately prior to analysis by GC. The volatile internal standards included the following, added at 0.25 μg to VOST tubes, condensates, and aqueous process samples:

Bromochloromethane
1,4-Difluorobenzene
Chlorobenzene-d_5

Volatile surrogates were added to all samples prior to analysis at a level of 0.25 μg. These compounds included the following:

Toluene-d_8
1,2-Dichloroethane-d_4
4-Bromofluorobenzene

TABLE 6-2

SEMIVOLATILE RESULTS SUMMARY
BLANKS

Blank ID	Matricies	Compound	Concentration, µg/L
Lab Blank 1	TR1: Caustic, Brine Scrubber	Bis(2-ethylhexyl)phthalate	287
Lab Blank 2	TR1: Process Water	Bis(2-ethylhexyl)phthalate	1390
Lab Blank 3	TR3: Brine & Scrubber	Bis(2-ethylhexyl)phthalate	10.9
Lab Blank 4	TR2: Process Water & Scrubber	Di-n-octylphthalate	67.2
Lab Blank 5	TR2: Brine, Caustic TR3: Caustic & Process Water	--	ND[a]
Lab Blank 6	TR4: Caustic, Scrubber, Brine, & Process Water	Bis(2-ethylhexyl)phthalate Di-n-octylphthalate	49.3 30.7
Lab Blank 8 (Ash)		--	ND
Lab Blank (Fuel Oil)		--	ND

[a]ND = Not detected. Detection limit is 40 µg/L.

TABLE 6-3

MPF SEMIVOLATILE QUALITY CONTROL ANALYSES

Sample Description		Target Compound	Amount, μg
Lab Extraction Blank 1	H01708	Benzyl alcohol	1740
		2-Methylphenol	916
		Bis(2-ethylhexyl)phthalate	21.8
Lab Extraction Blank 2	H01726	2-Methylphenol	1510
Water Blank[a]	H01736	Di-n-octylphthalate	13
Field Blank Filter and Solvent Blank	H01713	Benzyl alcohol	1010
		Bis(2-ethylhexyl)phthalate	166
Field Blank Resin and Water Blank	H01715	Benzyl alcohol	1020
		Benzoic acid	98
		Bis(2-ethylhexyl)phthalate	899
Trip Blank Resin	H01735	Benzyl alcohol	1930
Blank Train			
Filter and Front Wash	H01709	Benzyl alcohol	287
		Bis(2-ethylhexyl)phthalate	89.8
Resin and Back Wash	H01710	Benzyl alcohol	343
		Bis(2-ehtylhexyl)phthalate	101

[a]Water blank for Test Run 4.

The acceptable range of recoveries for the surrogates was assumed to be 50%-150%. Actual recoveries for surrogates from aqueous process samples and condensates were as follows:

1,2-Dichloroethane-d_4	76%-114%
Toluene-d_8	99%-110%
4-Bromofluorobenzene	86%-115%

The surrogate recoveries for each sample are given in Appendix I. VOST Audit results are presented in Table 6-4.

Matrix spike and matrix spike duplicate results for aqueous process samples are given in Tables 6-5 through 6-9. All recoveries were within acceptable limits except for the caustic samples. The extremely high pH of these samples caused degradation of the surrogate materials. The precision as determined by the relative differences of the matrix spike and matrix spike duplicates agreed to within 20% for all materials with the exception of the caustic samples. It is evident that the caustic samples are poor candidates for the standard method. However, because of the good recovery results obtained with the other matrices there is reasonable confidence that high levels of volatile compounds were not present in the caustic samples.

6.4 METALS ANALYSIS

All data were judged to be representative based on the quality control data obtained. This quality control data included analyte recoveries, train performance, sample tracking and custody documentation. All samples that were successfully collected and received were analyzed, and no losses were experienced in laboratory preparation or analysis.

As a QC protocol, the laboratory analyzed blank, duplicate and spiked samples of each matrix. To determine matrix effects on the metal analyses, the process samples from MPF Burn #2 were spiked with each of the seventeen metals analyzed. Target limits for metal recoveries were 70-130%.

The metals spiking results for the process samples are given in Tables 6-10 through 6-14. The MMT QC analyses are reported in Tables 6-15 and 6-16. Spiked metals recoveries for the TCLP ash analyses are presented in Table 6-17. Metal matrix spikes and duplicate analyses were within acceptable limits for most sample matrices. Exceptions and possible explanations for poor recoveries are addressed for each sample matrix below.

Spike recoveries for process water QC samples for all of the seventeen elements analyzed were very good with relative percent differences from 0 to 10%.

Analysis of scrubber brine digestates presented problems for ICP and graphite furnace analysis. Digestates required a fortyfold dilution for analysis by graphite furnace for thallium. Less dilute solutions coated the furnace and contact rings with a white powdery substance which prevented electrical contact. However, this high dilution raised the method detection limit to 0.4 μg/mL, well above the spike level of 0.1 μg/mL.

TABLE 6-4

VOST AUDIT RESULTS

Compound	Sample Concentration (ng/L)				
	1	2	3	4	Average
Bromomethane	375	470	441	366	413
Trichlorofluoroethane (UNK #1)	450	455	394	456	439
2-Butanone	271	285	281	318	289
1,2-Dichloroethane	694	746	749	741	733
Trichloroethane	1342	1391	1408	1377	1380
1,1-Dibromoethane (UNK #2)	875	884	910	956	907

TABLE 6-5

VOA QC ANALYSIS

Sample Description: RUN 2 PROCESS WATER PRE
Sample Run No.: PO2123 — Sample Size: 5 mL
Matrix Spike Run No.: PO2124 — Spike Sample Size: 5 mL
Duplicate Spike Run No.: PO2125 — Dup. Spike Size: 5 mL

No.	Compound	Added Spike Concen. (μg/L)	PO2123 Sample Concen. (μg/L)	PO2124 Spiked Sample Concen. (μg/L)	PO2124 Percent Recovery	PO2125 Spiked Sample Concen. (μg/L)	PO2125 Percent Recovery	Relative Percent Difference	SW-846 % Recovery Range
17	1,2-dichloroethane-d_4 SURR1	50	NA	56.5	113	54.7	109	3.6	76 -114
26	Toluene-d_8 SURR2	50	NA	49.7	99.4	50	100	0.6	88 -110
40	4-bromofluorobenzene SURR3	50	NA	50.3	101	50.3	101	0	86 -115
6	1,1-dichloroethane	50	ND	63.7	127	67	134	5.4	50.5-150
18	Benzene	50	ND	43.6	87.2	47.2	94.4	7.9	64 -136
21	Trichloroethane	50	ND	50	100	57	114	13	66.5-134
27	Toluene	50	ND	51.4	103	54.4	109	5.7	74.5-126
26	Chlorobenzene	50	ND	45.9	91.8	47.7	95.4	3.8	66 -134

NA = Not Applicable.
ND = Not detected (below detection limit).

TABLE 6-6

VOA QC ANALYSIS

Sample Description:	RUN 2 SCRUBBER LIQUOR PRE		
Sample Run No.:	PO2130	Sample Size:	5 mL
Matrix Spike Run No.:	PO2131	Spike Sample Size:	5 mL
Duplicate Spike Run No.:	PO2132	Dup. Spike Size:	5 mL

			PO2130	PO2131		PO2132			
No.	Compound	Added Spike Concen. (µg/L)	Sample Concen. (µg/L)	Spiked Sample Concen. (µg/L)	Percent Recovery	Spiked Sample Concen. (µg/L)	Percent Recovery	Relative Percent Difference	SW-846 % Recovery Range
17	1,2-dichloroethane-d_4 SURR1	50	NA	51.7	103	51.2	102	0.98	76 -114
26	Toluene-d_8 SURR2	50	NA	46.8	93.6	46	92	1.7	88 -110
40	4-bromofluorobenzene SURR3	50	NA	47.7	95.4	46.2	92.4	3.2	86 -115
6	1,1-dichloroethane	50	ND	65.9	132	55.4	111	17	50.5-150
18	Benzene	50	ND	40	81.8	40.8	81.6	0.24	64 -136
21	Trichloroethane	50	ND	50.1	100	49.7	99.4	0.6	66.5-134
27	Toluene	50	ND	47.5	95	46.1	92.2	3	74.5-126
26	Chlorobenzene	50	ND	44.2	88.4	41.9	83.8	5.3	66 -134

NA = Not Applicable.
ND = Not detected (below detection limit).

TABLE 6-7

VOA QC ANALYSIS

Sample Description: RUN 2 BRINE PRE
Sample Run No.: PO2134
Matrix Spike Run No.: PO2135
Duplicate Spike Run No.: PO2136

Sample Size: 5 mL
Spike Sample Size: 5 mL
Dup. Spike Size: 5 mL

No.	Compound	Added Spike Concen. (μg/L)	PO2134 Sample Concen. (μg/L)	PO2135 Spiked Sample Concen. (μg/L)	PO2135 Percent Recovery	PO2136 Spiked Sample Concen. (μg/L)	PO2136 Percent Recovery	Relative Percent Difference	SW-846 % Recovery Range
17	1,2-dichloroethane-d_4 SURR1	50	NA	55.1	110	52.8	106	3.7	76 -114
26	Toluene-d_8 SURR2	50	NA	48	96	48.6	97.2	1.2	88 -110
40	4-bromofluorobenzene SURR3	50	NA	49.3	98.6	48.2	96.4	2.3	86 -115
6	1,1-dichloroethane	50	ND	62	124	63.3	127	2.4	50.5-150
18	Benzene	50	ND	43.4	86.8	42.5	85	2.1	64 -136
21	Trichloroethane	50	ND	52.7	105	52.1	104	0.96	66.5-134
27	Toluene	50	ND	47.4	94.8	47	94	0.85	74.5-126
26	Chlorobenzene	50	ND	44.2	88.4	44.5	89	0.68	66 -134

NA = Not Applicable.

TABLE 6-8

VOA QC ANALYSIS

Sample Description:	RUN 2 CAUSTIC PRE		
Sample Run No.:	P02138	Sample Size:	5 mL
Matrix Spike Run No.:	P02144	Spike Sample Size:	5 mL
Duplicate Spike Run No.:	P02149	Dup. Spike Size:	5 mL

			P02138	P02144		P02149			
No.	Compound	Added Spike Concen. (μg/L)	Sample Concen. (μg/L)	Spiked Sample Concen. (μg/L)	Percent Recovery	Spiked Sample Concen. (μg/L)	Percent Recovery	Relative Percent Difference	SW-846 % Recovery Range
17	1,2-dichloroethane-d_4 SURR1	50	NA	48.4	96.8	47.7	95	1.5	76 -114
26	Toluene-d_8 SURR2	50	NA	42.9	85.8	43.2	86.4	0.7	88 -110
40	4-bromofluorobenzene SURR3	50	NA	42.6	85.2	44	88	3.2	86 -115
6	1,1-dichloroethane	50	ND	53.1	106	42.2	84.4	23	50.5-150
18	Benzene	50	ND	35.7	71.4	30.8	61.6	15	64 -136
21	Trichloroethane	50	ND	42.5	85	36.2	72.4	16	66.5-134
27	Toluene	50	ND	39.2	78.4	35.3	70.6	10	74.5-126
26	Chlorobenzene	50	ND	35.6	71.2	32.4	64.8	9.4	66 -134

NA = Not Applicable.
ND = Not detected (below detection limit).

TABLE 6-9

VOA QC ANALYSIS

Sample Description: TCLP MPF ASH: RUN 2
Sample Run No.: PO2206
Matrix Spike Run No.: PO2210
Duplicate Spike Run No.: PO2209

Sample Size: 5 mL
Spike Sample Size: 5 mL
Dup. Spike Size: 5 mL

No.	Compound	Added Spike Concen. (μg/L)	PO2206 Sample Concen. (μg/L)	PO2210 Spiked Sample Concen. (μg/L)	PO2210 Percent Recovery	PO2209 Spiked Sample Concen. (μg/L)	PO2209 Percent Recovery	Relative Percent Difference	SW-846 % Recovery Range
17	1,2-dichloroethane-d_4 SURR1	50	NA	55.3	111	54.5	109	1.8	76 -114
26	Toluene-d_8 SURR2	50	NA	50.4	101	46.9	93.8	7.4	88 -110
40	4-bromofluorobenzene SURR3	50	NA	50.1	100	49.6	99.2	0.8	86 -115
6	1,1-dichloroethane	50	ND	59.8	120	62.5	125	4.1	50.5-150
18	Benzene	50	ND	45	90	43.1	86.2	4.3	64 -136
21	Trichloroethane	50	ND	55	110	51.9	104	5.6	66.5-134
27	Toluene	50	ND	51	102	48.8	97.6	4.4	74.5-126
26	Chlorobenzene	50	ND	47.9	95.8	45	90	6.2	66 -134

NA = Not Applicable.
ND = Not detected (below detection limit).

TABLE 6-10

MPF TCLP METALS QC TABLE
SCRUBBER LIQUOR POST TEST
TEST RUN 2
SAMPLE NO. 9J-3-114

Element	Digestion Blank Conc., µg/mL	Sample Conc., µg/mL	Sample Duplicate Conc., µg/mL	Spike Added, µg/mL	Matrix Spike Conc., µg/mL	Matrix Spike % Recovery	Matrix Spike Duplicate Conc., µg/mL	Matrix Spike Duplicate % Recovery	Rel. % Dif.
Arsenic	<0.10	0.129	<0.10	2	2.51	119	2.39	113	5
Selenium	<0.10	<0.10	0.344	2	2.52	126	2.30	115	9
Cadmium	<0.02	<0.02	<0.02	0.5	0.603	121	0.607	121	0
Chromium	<0.05	<0.05	<0.05	0.5	0.480	96	0.469	94	2
Lead	<0.05	0.130	0.153	2	2.46	117	2.60	124	6
Nickel	<0.05	<0.05	<0.05	1	1.17	109	1.07	104	5
Tin	<0.10	<0.10	<0.10	1	1.17	117	0.904	90	26
Thallium	<0.010	<0.010	<0.010	0.1	<0.010	0[a]	<0.010	0[a]	--
Antimony	<0.10	<0.10	<0.10	1	1.26	126	1.08	108	15
Zinc	<0.051	0.169	0.099	1	1.54	137	1.21	104	27
Cobalt	<0.05	<0.05	<0.02	1	1.21	121	1.07	107	12
Barium	<0.10	<0.10	<0.10	1	1.16	116	1.18	118	0
Vanadium	<0.02	<0.02	<0.02	1	1.24	124	1.15	115	8
Beryllium	<0.02	<0.02	<0.02	0.5	0.588	117	0.570	114	3
Copper	<0.05	0.065	0.066	1	1.15	109	1.03	97	12
Silver	<0.10	<0.10	<0.10	1	<0.1	0[b]	<0.1	0[b]	--
Mercury	<0.0004	<0.0004	<0.0004	0.0030	0.00302	101	0.00299	100	1

[a]Analytical spike levels for thallium is too low for recovery due to the 1:40 dilution required for analysis.
[b]Recovery low due to insoluble chlorides.

TABLE 6-11

MPF TCLP METALS QC TABLE
SCRUBBER BRINE POST TEST
TEST RUN 2
SAMPLE NO. 9J-3-122

Element	Digestion Blank Conc., µg/mL	Sample Conc., µg/mL	Sample Duplicate Conc., µg/mL	Spike Added, µg/mL	Matrix Spike Conc., µg/mL	Matrix Spike % Recovery	Matrix Spike Duplicate Conc., µg/mL	Matrix Spike Duplicate % Recovery	Rel. % Dif.
Arsenic	<0.10	0.836	0.818	1	1.638	80	1.690	85	6
Selenium	<0.10	<0.10	0.10	1	0.861	86	0.892	89	3
Cadmium	<0.05	0.0811	0.0889	0.25	0.280	109	0.261	101	8
Chromium	<0.05	<0.05	0.061	0.25	0.338	135	0.321	128	5
Lead	0.157	7.74	7.61	1	7.944	20[a]	7.854	11[a]	58
Nickel	<0.05	0.099	0.20	0.5	0.635	107	0.686	117	9
Tin	<0.10	<0.10	0.22	0.5	0.657	131	0.702	140	7
Thallium	<0.40	<0.40	<0.40	0.01	--[b]		--[b]		
Antimony	<0.10	<0.10	<0.10	0.5	0.405	81	0.459	92	13
Zinc	<0.05	1.41	1.71	0.5	2.106	139	2.235	165	17
Cobalt	<0.05	<0.05	<0.05	0.5	0.448	90	0.457	91	1
Barium	<0.10	<0.10	<0.10	0.5	0.181	36[c]	<0.1	0[c]	--
Vanadium	<0.02	0.041	0.045	0.5	0.514	95	0.539	100	5
Beryllium	<0.02	<0.02	<0.02	0.25	0.224	90	0.207	83	8
Copper	<0.05	0.817	0.901	0.5	1.515	140	1.515	140	0
Silver	<0.10	<0.10	<0.10	0.5	0.524	105	0.539	107	2
Mercury	<0.0005	0.00091	0.0010	0.0030	0.00391	100	0.00420	110	10

[a]Sample concentration is too high for meaningful spike recovery.
[b]Analytical spike levels are too low for recovery due to the 1:40 dilution required for analysis.
[c]Barium spike recoveries low due to insoluble sulfates.

TABLE 6-12

MPF TCLP METALS QC TABLE
CAUSTIC POST TEST
TEST RUN 2
SAMPLE NO. 9J-3-130

Element	Digestion Blank Conc., µg/mL	Sample Conc., µg/mL	Sample Duplicate Conc., µg/mL	Spike Added, µg/mL	Matrix Spike Conc., µg/mL	Matrix Spike % Recovery	Matrix Spike Duplicate Conc., µg/mL	Matrix Spike Duplicate % Recovery	Rel. % Dif.
Arsenic	0.212	<0.10	<0.10	0.5	0.255	51	0.280	56[a]	9
Selenium	0.082	<0.10	<0.10	0.5	0.392	78	0.390	78	0
Cadmium	<0.02	<0.02	<0.02	0.125	0.0884	71	0.0919	74	4
Chromium	<0.05	<0.05	<0.05	0.125	<0.05	--[a]	<0.05	--[a]	--
Lead	0.2080	0.096	0.128	0.5	0.487	78	0.475	76	3
Nickel	<0.05	0.23	0.07	0.25	0.218	87	0.211	84	4
Tin	0.19	<0.10	<0.10	0.25	0.09	36	0.177	71[a]	63
Thallium	<0.40	<0.40	<0.40	0.010	<0.40[b]	--[b]	<0.40[b]	--[b]	--
Antimony	<0.10	<0.10	<0.10	0.25	<0.10	--[a]	<0.10	--[a]	--
Zinc	<0.05	0.102	0.23	0.25	0.338	94	0.352	100	3
Cobalt	<0.05	<0.05	<0.05	0.25	0.207	83	0.187	75	10
Barium	<0.10	<0.10	<0.10	0.25	0.293	117	0.289	116	1
Vanadium	<0.02	<0.02	<0.02	0.25	0.251	100	0.235	94	6
Beryllium	<0.02	<0.02	<0.02	0.125	0.113	90	0.106	85	6
Copper	<0.05	<0.05	0.11	0.25	0.345	138	0.313	125	10
Silver	<0.10	<0.10	<0.10	0.25	<0.1	0[c]	<0.1	0[c]	--
Mercury	<0.0005	<0.0005	<0.0005	0.003	2.70	90	2.83	94	4

[a]Analytical spike level is too low after dilution required for analysis.
[b]Analytical spike level is too low for recovery due to the 1:40 dilution required for analysis.
[c]Silver recoveries low due to insoluble chlorides.

TABLE 6-13

MPF TCLP METALS QC TABLE
PROCESS WATER POST TEST
TEST RUN 2
SAMPLE NO. 9J-3-138

Element	Digestion Blank Conc., µg/mL	Sample Conc., µg/mL	Sample Duplicate Conc., µg/mL	Spike Added, µg/mL	Matrix Spike Conc., µg/mL	Matrix Spike % Recovery	Matrix Spike Duplicate Conc., µg/mL	Matrix Spike Duplicate % Recovery	Rel. % Dif.
Arsenic	<0.05	<0.05	<0.05	2	1.60	80	1.74	87	8
Selenium	<0.05	<0.05	<0.05	2	1.62	81	1.73	87	7
Cadmium	<0.02	<0.02	<0.02	0.5	0.416	83	0.444	89	7
Chromium	<0.02	<0.02	<0.02	0.5	0.324	65	0.351	70	7
Lead	<0.05	<0.05	<0.05	2	1.98	99	2.04	102	3
Nickel	<0.05	<0.05	<0.05	1	1.04	104	1.04	104	0
Tin	<0.10	<0.10	<0.10	1	1.08	108	0.98	98	10
Thallium	<0.010	<0.010	<0.010	0.1	0.0617	62	0.0620	62	0
Antimony	<0.10	<0.10	<0.10	1	1.00	100	0.97	97	3
Zinc	<0.05	0.092	0.078	1	1.15	106	1.18	109	3
Cobalt	<0.05	<0.05	<0.05	1	1.05	105	1.06	106	1
Barium	<0.10	<0.10	<0.10	1	0.994	99	1.04	104	5
Vanadium	<0.02	<0.02	<0.02	1	1.03	103	1.04	104	1
Beryllium	<0.02	<0.02	<0.02	0.5	0.515	103	0.529	106	3
Copper	<0.05	<0.05	<0.05	1	1.05	105	1.04	104	1
Silver	<0.10	<0.10	<0.10	1	1.28	128	1.37	137	7
Mercury	<0.0005	0.0005	<0.0005	0.0030	0.00291	97	0.00286	95	2

TABLE 6-14

MPF TCLP METALS QC TABLE
FUEL OIL POST TEST
TEST RUN 2
SAMPLE NO. 9J-3-142

Element	Digestion Blank Conc., µg/mL	Sample Conc., µg/mL	Sample Duplicate Conc., µg/mL	Spike Added, µg/mL	Matrix Spike Conc., µg/mL	Matrix Spike % Recovery	Matrix Spike Duplicate Conc., µg/mL	Matrix Spike Duplicate % Recovery	Rel. % Dif.
Arsenic	<0.10	<0.10	<0.10	2	2.09	105	1.62	81	26
Selenium	<0.10	<0.10	<0.10	2	1.66	83	0.640	32	89
Cadmium	<0.02	<0.05	<0.02	0.5	0.493	99	0.502	100	1
Chromium	<0.02	<0.02	<0.02	0.5	0.264	73	0.270	54	2
Lead	<0.05	<0.05	<0.05	2	1.05	53[a]	0.462	23[a]	81
Nickel	<0.05	<0.05	<0.05	1	0.957	96	0.962	96	0
Tin	<0.10	<0.1	<0.1	1	0.82	82	0.84	84	2
Thallium	<0.010	<0.010	<0.010	0.1	0.073	73	0.079	79	8
Antimony	<0.10	<0.10	<0.10	1	0.639	64	0.810	81	23
Zinc	<0.05	<0.05	<0.05	1	0.944	94	0.974	97	3
Cobalt	<0.05	<0.05	<0.05	1	1.13	113	1.13	113	0
Barium	<0.10	<0.10	<0.10	1	<0.1	[b]	<0.1	[b]	--
Vanadium	<0.02	<0.02	<0.02	1	1.01	101	0.975	98	3
Beryllium	<0.02	<0.02	<0.02	0.5	0.550	110	0.565	113	3
Copper	<0.05	<0.05	<0.05	1	1.05	105	0.983	98	7
Silver	<0.10	<0.10	<0.10	1	0.764	76	0.970	97	24
Mercury	<0.0005	<0.0005	<0.0005	0.0030	0.00286	95	0.00281	94	1

[a]Lead recoveries low due to insoluble sulfide formation.
[b]Barium recoveries low due to insoluble sulfate formation.

TABLE 6-15

MPF MMT METALS ANALYSIS QC
FRONT HALF

Element	Method Blank; µg/mL	Spike Added µg/mL	Matrix Spike		Matrix Spike Duplicate		Relative % Difference
			Conc., µg/mL	% Recovery	Conc., µg/mL	% Recovery	
Arsenic	0.0830	0.80	0.601	75	0.689	86	14
Selenium	<0.05	0.80	0.652	82	0.73	91	10
Chromium	<0.02	0.20	0.161	81	0.173	87	7
Cadmium	<0.02	0.20	0.168	84	0.187	94	11
Lead	<0.05	0.80	0.669	84	0.748	94	11
Barium	<0.10	0.40	0.358	90	0.389	97	7
Beryllium	<0.02	0.20	0.169	84	0.183	92	9
Silver	<0.10	0.40	<0.10	[a]	<0.10	[a]	--
Tin	<0.10	0.40	0.231	58	0.311	78	29
Antimony	<0.10	0.40	0.330	83	0.382	96	15
Phosphorus	<0.10	1.00	1.452	145[b]	1.605	161[b]	10
Zinc	<0.05	0.40	0.346	87	0.401	101	15
Cobalt	<0.05	0.40	0.348	87	0.392	98	12
Nickel	<0.05	0.40	0.363	91	0.411	103	12
Boron	<0.10	0.40	0.230	58	0.276	69	17
Manganese	<0.02	0.20	0.176	88	0.199	100	13
Vanadium	<0.02	0.40	0.355	89	0.399	100	12
Copper	<0.05	0.40	0.349	87	0.385	96	10
Mercury	<0.002	0.008	0.020	254[c]	0.0183	229[c]	10
Thallium	<0.010	0.040	0.068	170	0.060	150	13

[a]Silver spike recoveries low due to insoluble chloride formation.
[b]High phosphorous recoveries are indicative of contamination from detergent.
[c]High mercury recoveries are indicative of contamination during sample preparation.

TABLE 6-16

MPF MMT METALS ANALYSIS QC
BACK HALF

Element	Method Blank; µg/mL	Spike Added µg/mL	Matrix Spike		Matrix Spike Duplicate		Relative % Difference
			Conc., µg/mL	% Recovery	Conc., µg/mL	% Recovery	
Arsenic	<0.05	2.00	1.845	92	1.954	98	6
Selenium	<0.05	2.00	1.893	95	1.938	97	2
Chromium	<0.02	0.50	0.384	77	0.396	79	3
Cadmium	<0.02	0.50	0.458	92	0.482	96	4
Lead	<0.05	2.00	1.753	88	1.827	91	3
Barium	<0.10	1.00	0.913	91	0.940	94	3
Beryllium	<0.02	0.50	0.461	92	0.470	94	2
Silver	<0.10	1.00	0.864	86	1.009	101	16
Tin	<0.10	1.00	0.877	88	0.886	89	1
Antimony	<0.10	1.00	0.821	82	0.841	84	2
Phosphorus	<0.10	4.00	3.58	90	3.55	89	1
Zinc	<0.05	1.00	0.922	92	0.941	94	2
Cobalt	<0.05	1.00	0.897	90	0.889	90	0
Nickel	<0.05	1.00	0.878	88	0.891	89	1
Boron	<0.10	1.00	0.822	82	0.843	84	2
Manganese	<0.02	0.50	0.423	85	0.452	90	6
Vanadium	<0.02	1.00	0.901	90	0.908	91	1
Copper	<0.05	1.00	0.907	91	0.911	91	0
Mercury	<0.010	0.10	0.0794	79	0.0808	81	3
Thallium	<0.0005	0.003	0.00262	87	0.00262	87	0

TABLE 6-17

TCLP QC TABLE
MPF TON CONTAINER RESIDUE
TEST RUN 2
SAMPLE NO. 9J-3-144

Element	Digestion Blank Conc., µg/mL	Sample Conc., µg/mL	Spike Added, µg/mL	Matrix Spike Conc., µg/mL	Matrix Spike % Recovery	Matrix Spike Duplicate Conc., µg/mL	Matrix Spike Duplicate % Recovery	Relative % Difference
Arsenic	<0.05	<0.05	2	1.86	93	1.79	90	3
Selenium	<0.05	1.52	2	1.52[a]	0[a]	2.23	36[a]	--
Cadmium	<0.02	<0.02	0.5	0.78	156	0.69	138	12
Chromium	<0.02	<0.02	0.5	0.47	94	0.43	86	9
Lead	<0.05	3.22	2	9.54	[a]	6.71	[a]	
Nickel	<0.05	0.40	1	0.73	73	0.71	71	3
Tin	<0.10	<0.12	1	1.90	178	1.41	129	32
Thallium	<0.010	<0.010	0.1	0.086	86	0.098	98	13
Antimony	<0.05	<0.05	1	1.32	132	1.40	140	6
Zinc	<0.05	0.42	1	0.73	73	0.69	69	6
Cobalt	<0.02	0.95	1	2.27	132	2.55	160	19
Barium	<0.05	<0.05	1	1.39	139	1.43	143	3
Vanadium	<0.02	0.43	1	1.12	69	1.31	88	24
Beryllium	<0.02	<0.02	0.5	0.595	120	0.619	124	2
Copper	<0.05	0.060	1	1.21	115	1.22	116	1
Silver	<0.10	<0.10	1	0.42	42[b]	0.19	19[b]	77
Mercury	<0.0005	<0.0005	0.0020	0.00207	104	0.00200	100	4

[a]Lead and selenium recoveries are erratic due to inconsistency in the samples.
[b]Silver recoveries are low due to formation of insoluble precipitate.

The laboratory also experienced problems with the analysis of scrubber brine digestates by ICP. Salt deposits formed in the ceramic plasma torch insert, completely blocking the flow of analyte from the spray chamber to the plasma. Samples were diluted in half with deionized water for analysis. The high zinc recoveries are indicative of contamination during sample preparation. However, even if the spike recoveries are normalized to 100%, the zinc values detected in the scrubber brine would still be significantly higher than the detection limit.

Scrubber liquor spike recoveries were within the target range with excellent precision for each element analyzed except thallium and silver. The low silver recoveries for the matrix spike is due to the formation of insoluble silver chloride.

Sample preparation and analysis of the caustic process samples presented problems similar to scrubber brine analysis. The very high level of caustic present in the samples required modification of the digestion procedure and sample dilution volumes. Nitric acid was added to the 50 mL aliquots of samples until the pH was acidic. Due to the energetic reaction upon addition of acid, even while cooling the mixture in an ice water bath, some loss of sample and analyte may have occurred. Caustic samples required dilution to twice the usual volume to prevent precipitation of sample and analyte from solution before analysis.

Similar to scrubber brine digestates, caustic samples required a forty fold dilution for analysis for thallium by graphite furnace. Without the dilution the furnace and contact rings were coated with a white powdery substance which prevented electrical contact for furnace heating. As described earlier, the high dilution raised the method detection limit to 0.4 μg/mL which was well above the spike level.

Caustic digestates caused problems similar to the scrubber brines during ICP analysis. The poor recoveries demonstrated for the scrubber brine QC spiked and duplicate analyses arise from the high solids content of the samples, with the insert becoming partially clogged, then completely unclogged during sample analysis.

The dilutions required for successful ICP analysis produced spike levels which were too low for meaningful QC application considering the sample matrix.

Matrix spike and duplicate analysis for fuel oil samples produced acceptable recoveries with good precision for most elements. Low barium and lead spike recoveries are attributable to high sulfur content in the samples. Recoveries for chromium are low but consistent. If analytical results were adjusted for the poor recoveries, the chromium concentration for each fuel oil sample would be <0.05 μg/mL.

QC analysis for MMT samples involved spiking mock sample solution with each of the twenty elements determined before preparation and analysis. MMT front half QC analysis produced excellent recoveries with good precision for all elements except silver, phosphorus, mercury and thallium. Silver recoveries are low due to the formation of insoluble silver chloride. The high phosphorus recoveries are an indication of phosphorus contamination from detergent. Mercury and thallium recoveries are apparently high due to contamination during sample preparation. There were no measurable levels of mercury or thallium in any MMT front half samples. The bias indicated by the QC results would have caused any

positive results for these two metals to be overstated. Back half MMT QC analysis gave good recoveries for all twenty elements with excellent precision.

Matrix spike and duplicate analysis of MPF ash TCLP liquid produced recoveries within the target range with good precision for most of the elements analyzed. Silver recoveries were low due to the formation of insoluble silver chloride. High spike recoveries indicate a high bias for cadmium, tin, antimony, cobalt, and barium. With the exception of tin, each of these elements are present at levels significantly higher than the detection limit, and none of the elements in question are present above regulatory concentration limits.

6.5 HCl ANALYSIS

M5AT matrix spike and matrix spike duplicate samples were run for each type of matrix (NaOH, H_2O, and H_2SO_4) for quality control. The results are given in Tables 6-18 through 6-20.

Matrix spike/matrix spike duplicate samples for each process liquid type (fuel oil, brine, scrubber liquor, caustic, and process water) were analyzed for quality control. Results are reported in Tables 6-21 through 6-25.

Blind spike results are presented in Table 6-26.

6.6 DIOXIN

Before being shipped to the field, the XAD-2 sorbent traps were spiked with 2 ng of $^{37}Cl_4$-2,3,7,8-tetrachlorodibenzo-p-dioxin. These spikes were used to indicate the recovery of dioxins from the sample trains.

The PCDD/PCDF analysis used several cleanup steps, and labeled standards were used to measure recoveries. An additional aliquot of $^{37}Cl_4$-2,3,7,8-TCDD as a cleanup-recovery standard was added to the dioxin fraction after extraction but prior to PCDD/PCDF cleanup. Immediately before the analysis step, the labeled recovery standards were added. Thus, the quantification of PCDD/PCDF was based on the standards spiked prior to extraction.

The recoveries of $^{37}Cl_4$-2,3,7,8-TCDD (i.e., the field spike-recovery standard and cleanup standard) for MM5 samples are given in Table 6-27. Generally, good recoveries were obtained for this compound, which had been spiked onto the XAD-2 resin in the MM5 tubes. Low recoveries of $^{37}Cl_4$-2,3,7,8-TCDD and the isotope dilution standards were obtained for the blank train samples (V05234 and V05233) and Test Run 1 samples (V05237 and V05235). All column cleanup fractions from the blank train filter and front wash (V05233) were analyzed. None of the fractions appeared to contain significant amounts of the isotope dilution standards. This may have occurred from loss of part of the samples during preparation. However, recovery for the field blank was above 60%. The field blank was used in correcting stack gas concentration. The low recovery of around 10% in the front and back of the train from Test Run 1 may have affected the detection limits attainable for this sample.

Table 6-28 indicates the PCDDs/PCDFs found in the MM5 blanks (both laboratory and field generated). No TCDD or TCDF was found and the amount of other congeners found had little effect on actual samples.

TABLE 6-18

MPF - ACID TRAIN QC RESULTS
9J-1A-10 WATER MS/MSD RESULTS

Element	Blank, Conc., µg/mL	Spike Added, µg/mL	Matrix Spike		Matrix Spike Duplicate	
			Conc., µg/mL	% Recovery	Conc., µg/mL	% Recovery
Fluoride	0	5	4.82	96.3	4.82	96.4
Chloride	0	7.5	7.26	96.8	7.34	97.8

TABLE 6-19

MPF - ACID TRAIN QC RESULTS
10J-5-9 NaOH MS/MSD RESULTS

Element	Blank, Conc., μg/mL	Spike Added, μg/mL	Matrix Spike		Matrix Spike Duplicate	
			Conc., μg/mL	% Recovery	Conc., μg/mL	% Recovery
Chloride	0	7.5	6.33	84.4	6.39	85.2

TABLE 6-20

MPF - ACID TRAIN QC RESULTS
9J-1A H_2SO_4 MS/MSD RESULTS

Element	Blank, Conc., μg/mL	Spike Added, μg/mL	Matrix Spike		Matrix Spike Duplicate	
			Conc., μg/mL	% Recovery	Conc., μg/mL	% Recovery
Fluoride	0	5	3.275	65.5	3.17	63.4
Chloride	0	7.5	6.421	85.6	6.26	83.5

TABLE 6-21

MPF - ANION RESULTS
9J-3-142 FUEL OIL - POST TEST QC RESULTS

Element	Blank, Conc., μg/mL	Spike Added, μg/mL	Matrix Spike		Matrix Spike Duplicate	
			Conc., μg/mL	% Recovery	Conc., μg/mL	% Recovery
Fluoride	0	10	6.78	68	7.22	72
Chloride	0	15	11.3	75	12.5	83
Phosphate	0	175	154	88	156	89
Sulfate	0	90	81.7	91	82.4	92

TABLE 6-22

MPF - ANION RESULTS
9J-3-118 BRINE - POST TEST QC RESULTS

Element	Blank, Conc., μg/mL	Spike Added, μg/mL	Matrix Spike Conc., μg/mL	Matrix Spike % Recovery	Matrix Spike Duplicate Conc., μg/mL	Matrix Spike Duplicate % Recovery
Fluoride	0	10	8.12	81	8.32	83
Chloride	95.6	15	110	94	109	88
Phosphate	0	175	168	96	166	95
Sulfate	88.1	90	174	96	176	98

TABLE 6-23

MPF - ANION RESULTS
J-3-114 SCRUBBER LIQUOR - POST TEST QC RESULTS

Element	Blank, Conc., µg/mL	Spike Added, µg/mL	Matrix Spike		Matrix Spike Duplicate	
			Conc., µg/mL	% Recovery	Conc., µg/mL	% Recovery
Fluoride	0	10	8.76	88	8.63	86
Chloride	471	15	483	82	483	81
Phosphate	0	175	170	97	169	97
Sulfate	192	90	276	93	274	91

TABLE 6-24

MPF - ANION RESULTS
CAUSTIC - POST TEST QC RESULTS

Element	Blank, Conc., μg/mL	Spike Added, μg/mL	Matrix Spike		Matrix Spike Duplicate	
			Conc., μg/mL	% Recovery	Conc., μg/mL	% Recovery
Fluoride	0	10	7.11	71	7.34	73
Chloride	202	15	213	73	214	84
Phosphate	0	175	166	95	167	96
Sulfate	105	90	197	102	198	103

TABLE 6-25

MPF - ANION RESULTS
PROCESS WATER - POST TEST QC RESULTS

Element	Blank, Conc., μg/mL	Spike Added, μg/mL	Matrix Spike		Matrix Spike Duplicate	
			Conc., μg/mL	% Recovery	Conc., μg/mL	% Recovery
Fluoride	0	10	10.3	103	9.74	97
Chloride	6.56	15	23.2	111	22.1	104
Phosphate	0	175	171	98	170	97
Sulfate	0	90	88.0	98	86.2	96

TABLE 6-26

MPF - MPF ANION RESULTS
FIELD QC SAMPLES

Sample Description		Chloride mg/L	Amount Spiked	% Recovery
H_2O Blank	9J-QC-1	ND[a]	0	--
H_2O Low Level Spike	9J-QC-2	2.43	2.47	97.7
H_2O Med Level Spike	9J-QC-3	23.9	24.9	95.9
H_2O High Level Spike	9J-QC-4	248	249	99.6
NaOH Blank	9J-QC-5	ND	0	--
NaOH Low Level Spike	9J-QC-6	1.49	2.49	59.9
NaOH Med Level Spike	9J-QC-7	18.89	24.9	76
NaOH High Level Spike	9J-QC-8	253.4	249	102

[a]ND = Not detected.

TABLE 6-27

TARGET PCDFs/PCDDs IN MM5 TRAINS FROM MPF QC ANALYSES

Sample Description	Sample No.	Amount Found (Nanograms)								
		2,3,7,8-TCDF	2,3,7,8-TCDD	1,2,3,7,8-PeCDF	2,3,4,7,8-PeCDF	1,2,3,7,8-PeCDD	1,2,3,4,7,8-HxCDF	1,2,3,6,7,8-HxCDF	1,2,3,7,8,9-HxCDF	2,3,4,6,7,8-HxCDF
Lab Blank No. 1	VO5232	ND[a]	ND	ND	ND	ND	ND	ND	ND	ND
Lab Blank No. 2	VO5250	ND	ND	ND	ND	ND	ND	ND	ND	ND
Blank Train Resin Trip Blank	VO5260	ND	ND	ND	ND	ND	ND	ND	ND	ND
Blank Train Filter And Front Wash	VO5233	ND	ND	ND	ND	ND	ND	ND	ND	ND
Blank Train Resin and Back Wash	VO5234	ND	ND	ND	ND	ND	ND	ND	ND	ND
Blank Train Field Resin and Water Blank	VO5236	ND	ND	ND	ND	ND	ND	ND	ND	ND
Test Run 4 Water Blank	VO5259	ND	ND	ND	ND	ND	ND	ND	ND	ND

[a]ND = Not detected. Detection limit is 0.02 ng for TCDFs and TCDDs; 0.10 ng for PeCDFs, PeCDDs, HxCDFs, HxCDDs, HpCDFs, and HpCDDs; and 0.20 ng for OCDFs and OCDDs.

TABLE 6-27 (CONTINUED)

TARGET PCDFs/PCDDs IN MM5 TRAINS FROM MPF QA ANALYSES

Sample Description	Sample No.	Amount Found (Nanograms) 1,2,3 4,7,8, HxCDD	1,2,3 6,7,8- HxCDD	1,2,3, 7,8,9 HxCDD	1,2,3,4, 6,7,8- HpCDF	1,2,3,4, 7,8,9- HpCDF	1,2,3,4, 6,7,8- HpCDD	OCDF	OCDD	Surrogate[b] (% Recv.)
Lab Blank No. 1	VO5232	ND[a]	ND	ND	ND	ND	ND	ND	ND	0.493(62)
Lab Blank No. 2	VO5250	ND	ND	ND	ND	ND	ND	ND	ND	0.656(82)
Blank Train Resin Trip Blank	VO5260	ND	ND	ND	ND	ND	ND	ND	ND	1.07 (38)[c]
Blank Train Filter And Front Wash	VO5233	ND	ND	ND	1.03	ND	ND	ND	ND	0.007(1)[c]
Blank Train Resin and Back Wash	VO5234	ND	ND	ND	ND	ND	ND	ND	0.345	0.106(3.7)[c]
Blank Train Field Resin and Water Blank	VO5236	ND	ND	ND	ND	ND	ND	ND	ND	1.76 (63)
Test Run 4 Water Blank	VO5259	ND	ND	ND	ND	ND	ND	ND	ND	0.621(78)

[a]ND = Not detected. Detection limit is 0.02 ng for TCDFs and TCDDs; 0.10 ng for PeCDFs, PeCDDs, HxCDFs, HxCDDs, HpCDFs, and HpCDDs; and 0.20 ng for OCDFs and OCDDs.
[b]The surrogate is $^{37}Cl_4$-2,3,7,8-tetrachlorodibenzo(1,4)dioxin. Resin samples (VO 5234, 5236, 5235, 5261, 5654, and 5251) were spiked with 2.8 ng of the surrogate; the remaining samples were spiked with 0.8 ng of the same surrogate.
[c]Lo ecovery is believed to have resulted from loss of part of the samples during preparation.

TABLE 6-28

TOTAL PCDFS/PCDDs IN MM5 TRAINS FROM MPF QC ANALYSES

Sample Description	Sample No.	Amount (Nanograms)										2,3,7,8-TCDD Toxicity Equivalent
		TCDF	TCDD	PeCDF	PeCDD	HxCDF	HxCDD	HpCDF	HpCDD	OCDF	OCDD	
Lab Blank No. 1	V05232	ND[a]	ND	ND	ND	ND	ND	ND	ND	ND	ND	NR[b]
Lab Blank No. 2	V05250	ND	ND	ND	ND	ND	ND	ND	ND	ND	ND	NR
Blank Train Resin Trip Blank	V05260	ND	ND	ND	ND	ND	ND	ND	ND	ND	ND	NR
Blank Train Filter and Front Wash	V05233	ND	ND	ND	ND	ND	ND	0.974	ND	ND	ND	0.0103
Blank Train Resin and Back Wash	V05234	ND	ND	ND	ND	ND	ND	ND	ND	ND	0.345	0.000345
Blank Train Field Resin and Water Blank	V05236	ND	ND	ND	ND	0.111	ND	ND	ND	ND	ND	NR
Test Run 4 Water Blank	V05259	ND	ND	ND	ND	ND	ND	ND	ND	ND	ND	NR

[a]ND = Not detected above reporting limit of 0.02 ng for TCDFs and TCDDs; 0.10 ng for PeCDFs, PeCDDs, HxCDFs, HxCDDs, HpCDFs, and HpCDDs; and 0.20 ng for OCDFs and OCDDs.
[b]NR = None Reported, no value can be calculated.

The results for the matrix spike and matrix spike duplicate for each sample type are given in Tables 6-29 through 6-35 and in Appendix H. Except for ash samples, the recovery of each component was good, and the relative difference between the matrix spike and matrix spike duplicate for each compound was generally less than 20%, which was considered good. The results for the ash samples were erratic due to the low amounts of analytes spiked into the samples relative to the amounts already present in the samples.

The recoveries of isotope dilution standards spiked into the samples prior to extraction were generally good. As discussed above, some low recoveries were obtained for MM5 samples. Data are presented in Appendix H. Even when the recoveries of isotopically labeled PCDD/PCDF surrogates fall outside the accepted range (40-120%) the calculated concentrations of target analytes are correct because the calculations of target analytes are based upon the amount of their isotopically labeled surrogates present in the sample. The daily continuing calibration for target PCDD/PCDF analytes generally met the acceptance criteria, however, even when some values were outside the acceptance range, no PCDDs/PCDFs of that type were detected in any of the samples.

6.7 QA/QC SUMMARY

The results of the QA/QC samples indicate that sample collection and analysis were performed in adherence to method criteria. Spike recoveries were adequate in most cases.

A CEM audit was conducted prior to the start of the test runs. In addition a VOST audit was conducted prior to the trial burn. The results are contained in Table 6-36.

Included in the appendices (A, H, I, J, K and M) are lists of reagents, suppliers, and lot numbers for the chemicals.

TABLE 6-29

TOTAL PCDFs/PCDDs IN PROCESS WATER SAMPLES FROM MPF QC ANALYSES

Sample Description	Sample No.	Concentration Found (ng/L)									
		TCDF	TCDD	PeCDF	PeCDD	HxCDF	HxCDD	HpCDF	HpCDD	OCDF	OCDD
SRI Blank (Test Run 1)	V05270	ND[a]	ND	ND	ND	ND	ND	ND	ND	ND	ND
SRI Blank (Test Run 2)	V05448	ND	ND	ND	ND	ND	ND	0.84	ND	ND	ND
SRI Blank (Test Run 3)	V05270	ND	ND	ND	ND	ND	ND	ND	ND	ND	ND
SRI Blank (Test Run 4)	V05319	ND	ND	ND	ND	ND	ND	ND	ND	ND	ND
Test Run 2 Post Test (Matrix Spike)	V05480	(105%)[b]	(100%)	(99.5%)	(98.4%)	(106%)	(92.7%)	(97.7%)	(96.6%)	(100%)	(101%)
Test Run 2 Post Test (Matrix Spike Duplicate)	V05481	(101%)	(99%)	(96.8%)	(96.7%)	(106%)	(98.5%)	(102%)	(97.9%)	(93.2%)	(99.7%)

[a]ND = Not detected. Detection limit is 0.04 ng/L for TCDFs and TCDDs; 0.20 ng/L for PeCDFs, PeCDDs, HxCDFs, HxCDDs, HpCDFs, and HpCDDs; and 0.40 ng/L for OCDFs and OCDDs.
[b]The percent recovery of spiked components is enclosed in parentheses.

TABLE 6-30

TOTAL PCDFs/PCDDs IN SCRUBBER LIQUOR SAMPLES FROM MPF QC ANALYSES

Sample Description	Sample No.	Concentration Found (ng/L)									
		TCDF	TCDD	PeCDF	PeCDD	HxCDF	HxCDD	HpCDF	HpCDD	OCDF	OCDD
SRI Blank (Test Run 1)	V05270	ND[a]	ND	ND	ND	ND	ND	ND	ND	ND	ND
SRI Blank (Test Run 2)	V05308	0.06	ND	0.26	ND	ND	ND	ND	ND	ND	ND
SRI Blank (Test Run 3)	V05270	ND	ND	ND	ND	ND	ND	ND	ND	ND	ND
SRI Blank (Test Run 4)	V05319	ND	ND	ND	ND	ND	ND	ND	ND	ND	ND
Test Run 2 Post Test (Matrix Spike)	V05322	(99.6%)[b]	(88.9%)	(111%)	(104%)	(113%)	(105%)	(110%)	(110%)	(109%)	(102%)
Test Run 2 Post Test (Matrix Spike Duplicate)	V05324	(109%)	(102%)	(116%)	(105%)	(113%)	(107%)	(116%)	(105%)	(113%)	(97.3%)

[a]ND = Not detected. Detection limit is 0.04 ng/L for TCDFs and TCDDs; 0.20 ng/L for PeCDFs, PeCDDs, HxCDFs, HxCDDs, HpCDFs, and HpCDDs; and 0.40 ng/L for OCDFs and OCDDs.
[b]The percent recovery of spiked components is enclosed in parentheses.

TABLE 6-31

TOTAL PCDFs/PCDDs IN BRINE SAMPLES FROM MPF QC ANALYSES

Sample Description	Sample No.	Concentration Found (ng/L)									
		TCDF	TCDD	PeCDF	PeCDD	HxCDF	HxCDD	HpCDF	HpCDD	OCDF	OCDD
SRI Blank (Test Run 1)	V05270	ND[a]	ND	ND	ND	ND	ND	ND	ND	ND	ND
SRI Blank (Test Run 2)	V05448	ND	ND	ND	ND	ND	ND	0.84	ND	ND	ND
SRI Blank (Test Run 3)	V05270	ND	ND	ND	ND	ND	ND	ND	ND	ND	ND
SRI Blank (Test Run 4)	V05319	ND	ND	ND	ND	ND	ND	ND	ND	ND	ND
Test Run 2 Post Test (Matrix Spike)	V05466	(102%)[b]	(101%)	(101%)	(93.2%)	(112%)	(98.4%)	(115%)	(100%)	(112%)	(106%)
Test Run 2 Post Test (Matrix Spike Duplicate)	V05467	(103%)	(97.2%)	(98.3%)	(99.5%)	(111%)	(96.5%)	(105%)	(99.8%)	(108%)	(109%)

[a]ND = Not detected. Detection limit is 0.04 ng/L for TCDFs and TCDDs; 0.20 ng/L for PeCDFs, PeCDDs, HxCDFs, HxCDDs, HpCDFs, and HpCDDs; and 0.40 ng/L for OCDFs and OCDDs.
[b]The percent recovery of spiked components is enclosed in parentheses.

TABLE 6-32

TOTAL PCDFs/PCDDs IN CAUSTIC SAMPLES FROM MPF QC ANALYSES

Sample Description	Sample No.	Concentration Found (ng/L)									
		TCDF	TCDD	PeCDF	PeCDD	HxCDF	HxCDD	HpCDF	HpCDD	OCDF	OCDD
SRI Blank (Test Run 1)	V05448	ND[a]	ND	ND	ND	ND	ND	0.84	ND	ND	ND
SRI Blank (Test Run 2)	V05308	0.06	ND	0.26	ND	ND	ND	ND	ND	ND	ND
SRI Blank (Test Run 3)	V05308	0.06	ND	0.26	ND	ND	ND	ND	ND	ND	ND
SRI Blank (Test Run 4)	V05319	ND	ND	ND	ND	ND	ND	ND	ND	ND	ND
Test Run 2 Post Test (Matrix Spike)	V05349	(117%)[b]	(120%)	(108%)	(105%)	(110%)	(99.7%)	(106%)	(104%)	(97.8%)	(106%)
Test Run 2 Post Test (Matrix Spike Duplicate)	V05350	(115%)	(113%)	(114%)	(106%)	(111%)	(103%)	(105%)	(104%)	(95.8%)	(107%)

[a]ND = Not detected. Detection limit is 0.04 ng/L for TCDFs and TCDDs; 0.20 ng/L for PeCDFs, PeCDDs, HxCDFs, HxCDDs, HpCDFs, and HpCDDs; and 0.40 ng/L for OCDFs and OCDDs.
[b]The percent recovery of spiked components is enclosed in parentheses.

TABLE 6-33

TOTAL PCDFs/PCDDs IN FUEL SAMPLES FROM MPF QC ANALYSES

Sample Description	Sample No.	Concentration (ng/kg)									
		TCDF	TCDD	PeCDF	PeCDD	HxCDF	HxCDD	HpCDF	HpCDD	OCDF	OCDD
SRI Blank	V05479	ND[a]	ND	ND	ND	ND	ND	ND	ND	ND	ND
Test Run 2 Post Test (Matrix Spike)	V05486	(96.4%)[b]	(85.1%)	(107%)	(109%)	(123%)	(106%)	(119%)	(113%)	(120%)	(116%)
Test Run 2 Post Test (Matrix Spike Duplicate)	V05487	(93.2%)	(87.2%)	(103%)	(98.2%)	(125%)	(104%)	(112%)	(113%)	(113%)	(116%)

[a]ND = Not detected. Detection limit is 0.04 ng/L for TCDFs and TCDDs; 0.20 ng/L for PeCDFs, PeCDDs, HxCDFs, HxCDDs, HpCDFs, and HpCDDs; and 0.40 ng/L for OCDFs and OCDDs.
[b]The percent recovery of spiked components is enclosed in parentheses.

TABLE 6-34

DETERMINATION OF TARGET PCDFs/PCDDs IN ASH SAMPLES OF TON CONTAINER RESIDUE

Sample Description	Sample No.	Amount (Nanograms)								
		2,3,7,8-TCDF	2,3,7,8-TCDD	1,2,3,7,8-PeCDF	2,3,4,7,8-PeCDF	1,2,3,7,8-PeCDD	1,2,3,4,7,8-HxCDF	1,2,3,6,7,8-HxCDF	1,2,3,7,8,9-HxCDF	2,3,4,6,7,8-HxCDF
Lab Blank	V05519	ND[a]	ND	ND	ND	ND	ND	ND	ND	ND
Test Run 2 Ash (Matrix Spike)	V05509	NA[b]	NA	NA	NA	NA	NA	NA	NA	NA
Test Run 2 Ash (Matrix Spike Duplicate)	V05511	NA	NA	NA	NA	NA	NA	NA	NA	NA

[a]ND = Not detected. Detection limit is 2 ng/kg for TCDFs and TCDDs; 10 ng/kg for PeCDFs, PeCDDs, HxCDFs, HxCDDs, HpCDFs, and HpCDDs; and 20 ng/kg for OCDFs and OCDDs.

[b]NA = Not applicable. Erratic results were obtained due to the low spike amounts of PCDDs/PCDFs relative to the concentrations of PCDDs/PCDFs already present in samples.

TABLE 6-34 (CONTINUED)

DETERMINATION OF TARGET PCDFs/PCDDs IN ASH SAMPLES OF TON CONTAINER RESIDUE

		Amount (Nanograms)							
Sample Description	Sample No.	1,2,3 4,7,8, HxCDD[c]	1,2,3 6,7,8- HxCDD	1,2,3, 7,8,9 HxCDD	1,2,3,4, 6,7,8- HpCDF	1,2,3,4, 7,8,9- HpCDF	1,2,3,4, 6,7,8- HpCDD	OCDF	OCDD
Lab Blank	V05519	ND[a]	ND	ND	ND	ND	ND	ND	ND
Test Run 2 Ash (Matrix Spike)	V05509	NA[b]	NA	NA	NA	NA	NA	NA	NA
Test Run 2 Ash (Matrix Spike Duplicate)	V05511	NA	NA	NA	NA	NA	NA	NA	NA

[a]ND = Not detected. Detection limit is 2 ng/kg for TCDFs and TCDDs; 10 ng/kg for PeCDFs, PeCDDs, HxCDFs, HxCDDs, HpCDFs, and HpCDDs; and 20 ng/kg for OCDFs and OCDDs.

[b]NA = Not applicable. Erratic results were obtained due to the low spike amounts of PCDDs/PCDFs relative to the concentrations of PCDDs/PCDFs already present in samples.

[c]The retention time for this analysis was a couple of seconds outside the retention time limits for positive identification which may be due to co-elution of the analyte with a non-target HXCDD. Therefore, the actual concentration of this analyte may be overstated.

TABLE 6-35

DETERMINATION OF TOTAL PCDFs/PCDDs IN ASH SAMPLES FROM MPF QC ANALYSES

Sample Description	Sample No.	Amount (Nanograms)										
		TCDF	TCDD	PeCDF	PeCDD	HxCDF	HxCDD	HpCDF	HpCDD	OCDF	OCDD	2,3,7,8-TCDD Toxicity Equivalent
Lab Blank	V05519	ND[a]	ND	ND	ND	ND	ND	15.2	ND	ND	ND	0.152
Test Run 2 Ash (Matrix Spike)	V05509	NA[b]	NA	NA	NA	NA	NA	NA	NA	NA	NA	
Test Run 2 Ash (Matrix Spike Duplicate)	V05511	NA	NA	NA	NA	NA	NA	NA	NA	NA	NA	

[a]ND = Not detected. Detection limit is 2 ng/kg for TCDFs and TCDDs; 10 ng/kg for PeCDFs, PeCDDs, HxCDFs, HxCDDs, HpCDFs, and HpCDDs; and 20 ng/kg for OCDFs and OCDDs.
[b]NA = Not applicable. Erratic results were obtained due to the low spike amounts of PCDDs/PCDFs relative to the concentrations of PCDDs/PCDFs already present in samples.

TABLE 6-36

VOST AUDIT RESULTS

Compound	Sample Concentration (ng/L)				
	1	2	3	4	Average
Bromomethane	375	470	441	366	413
Trichlorofluoroethane (Unk #1)	450	455	394	456	439
2 - Butanone	271	285	281	318	289
1,2, - Dichloroethane	694	746	749	741	733
Trichloroethene	1342	1391	1408	1377	1308
1,1, - Dibromoethane (Unk #2)	875	884	910	956	907

ATTACHMENT 1

MEMORANDUM OF UNDERSTANDING

MEMORANDUM FOR RECORD

SUBJECT: Performance Conditions for the Metal Parts Furnace (MPF) Trial Burn at JACADS

1. The following issues concerning performance conditions for the MPF Trial Burn at JACADS were discussed and agreed upon during the preliminary Trial Burn coordination meeting held on 17 August 1992, first trial burn run held on 18 August 1992, and subsequent meetings, by the parties signed below. This memorandum for record is written to document the decisions for future reference.

2. It was agreed that the cyclonic flow test would be completed before the first run of the trial burn.

3. It was agreed that the CEMS audit would be conducted prior to the first trial burn run.

4. It was agreed that 10 minutes per hour would be allowed for the purge cycles of the O_2 monitors. A five (5) minute purge cycle would occur every 30 minutes rather than every 22 minutes.

5. It was agreed that at a minimum one successful trial burn run would be conducted with 2.0" ± 0.25" (less than 73.1 lbs) of HD remaining in the ton containers. It was also agreed that in the remaining trial burn runs the army would drain as much HD as possible from the ton containers. The run with the higher agent feed rate would be given greater weight in setting the maximum feed rate in the final permit. The final permit feed rate of HD will be determined following submission of the trial burn results and discussions between the army and the USEPA.

6. During the first trial burn run (18 August 1992), it was agreed that the operating condition for the temperature in the primary chamber would be 1450 ± 250°F (rather than the RCRA specified temperature of 1450 ± 150°F) for the trial burn period only. This was based on the fact that the temperature in Zone 1 drops below the lower temperature operating limit when a ton container (massive heat sink) is initially introduced into the furnace. The temperature of the second zone tends to rise above the high temperature limit due to increased fuel feed to compensate the heat when the ton container enters this zone.

7. The MPF Trial Burn Plan issued under the Temporary Authorization (30 July 1992) stated that a munition tray in the discharge airlock would be monitored for two cycles of the ACAMS to verify that no agent was present. It was agreed that one complete ACAMS cycle would be sufficient to verify that no agent is present. In addition, it was agreed that ton containers suspected to contain possible agent between 0.2 and 0.7 TWA would exit the discharge airlock and the punched holes would be capped. Once cooled, the ton container would be transferred to the TMA for further monitoring. Suspect ton containers with possible agent greater than 0.7 TWA would be returned to the furnace for further processing.

8. During a meeting held on 19 August 1992, it was agreed that the rewiring of the thermocouple configuration in all three zones of the MPF would be a Class 1 notification. Each zone contains three thermocouples at equal distance intervals. Originally, the first and third thermocouple would be averaged and used to control the temperature in that particular zone while the second thermocouple would be hardwired directly to Burner Management Panel for high temperature burner cutoff. The change consisted of using the average of the first and second thermocouples to control the temperature of the particular zone and the third thermocouple would be hardwired to the Burner Management Pane.

9. During the attempt of the second run on 20 August 1992, it was agreed that the Agent Collection System (ACS) tank limit could be increased up to 90% capacity for that specific day in order to support the MPF trial burn run.

10. During the second MPF trial burn run on 23 August 1992, it was agreed that ton container #44 (containing 81.3 lbs of agent) could be processed even though it exceeded the 73.1 lbs criteria that had been established. This ton container was considered an isolated case and it was understood that no ton containers containing greater than 73.1 lbs of agent would be processed in the MPF.

11. It was agreed on 23 August 1992 that the post-trial burn run samples for the second run would also be used as the pre-trial burn samples for the third run, as long as the period of time between run was not greater than one hour. The trial burn samples included clean liquor, scrubber brine, caustic solution, fuel oil, and process water.

12. The trial burn performance conditions identified and described above have been discussed and agreed to by the undersigned.

Mr. Gary W. McCloskey
JACADS Project Manager

Ms. Catherine Massimino
EPA Region X
Senior RCRA/Superfund
Technical Specialist

Mr. Y. J. Kim
EPA Region IX
National Incineration Expert

Data and Document Control Center
B090

B090

RESULTS OF THE DEMONSTRATION TEST BURN FOR THERMAL DESTRUCTION OF AGENT HD IN THE JOHNSTON ATOLL CHEMICAL AGENT DISPOSAL SYSTEM LIQUID INCINERATOR

Prepared for:

Program Manager for Chemical Demilitarization
Environmental and Monitoring Division

United Engineers & Constructors Inc.
Philadelphia, PA

February 1993

RESULTS OF THE DEMONSTRATION TEST BURN FOR THERMAL DESTRUCTION OF AGENT HD IN THE JOHNSTON ATOLL CHEMICAL AGENT DISPOSAL SYSTEM LIQUID INCINERATOR

Prepared for:

Program Manager for Chemical Demilitarization
Environmental and Monitoring Division

United Engineers & Constructors Inc.
Philadelphia, PA

February 1993

TABLE OF CONTENTS

Table List
Figure List
List of Acronyms

Section		Page
ES	EXECUTIVE SUMMARY	ES-1
1	INTRODUCTION	1-1
	1.1 Purpose of the Test Program	1-1
	1.2 Scope of This Report	1-2
2	SUMMARY OF DATA	2-1
	2.1 Steady State Operating Conditions	2-1
	2.2 Destruction of Chemical Agent	2-2
	2.3 Particulate Emissions	2-2
	2.4 HCl Emissions	2-2
	2.5 Carbon Monoxide	2-2
	2.6 Metals	2-3
	2.6.1 Analysis of Liquid Process Samples for	2-3
	2.6.2 Stack Emissions of Metals	2-3
	2.6.3 Slag Leachate	2-3
	2.7 Products of Incomplete Combustion	2-3
	2.8 Dioxin/Furan Emissions	2-4
	2.9 Anions in Process Samples	2-4
	2.10 Total Hydrocarbons	2-4
	2.11 Quality Assurance/Quality Control	2-4
3	FACILITY DESCRIPTION	3-1
	3.1 The Johnston Atoll Chemical Agent Disposal System (JACADS) Facility	3-1
	3.2 LIC Description	3-2
	3.3 Feed for the Government Demonstration Burn	3-3
	3.4 Sampling Locations	3-3
	3.5 Facility Instrumentation	3-4
4	TEST PROCEDURES	4-1
	4.1 Preparation for Testing	4-1
	4.2 Continuous Collection Methods	4-1
	4.2.1 Continuous Emission Monitors (CEMs)	4-1
	4.2.2 Chemical Agent Monitors	4-1

TABLE OF CONTENTS (cont'd)

Section		Page
4.3	Manual Sample Collection Methods	4-2
4.3.1	Modified Method Five (MM5)	4-2
4.3.2	Volatile Organic Sampling Train (VOST)	4-2
4.3.3	Method Five Acid Train (M5AT)	4-2
4.3.4	Multiple Metals Train (MMT)	4-2
4.3.5	Particle Size Distribution	4-3
4.3.6	Orsat	4-3
4.3.7	Support Methods	4-3
4.3.8	Total Hydrocarbons (THC)	4-3
4.4	Sample Collection Sequence and Procedure	4-3
4.4.1	Government Demonstration Burn Sequence	4-3
4.4.2	Sample Collection Procedure	4-4
4.4.3	Sampling Contingency Plan	4-6
4.5	Analysis	4-6
4.6	Analysis Summaries	4-6
4.6.1	Semivolatile Organics Analysis	4-6
4.6.1.1	Extractions	4-6
4.6.1.2	Analytical Procedures for Determining Semivolatile Organics	4-7
4.6.1.2.1	Polychlorinated Dibenzo-p-dioxins and Polychlorinated Dibenzofurans	4-7
4.6.1.2.2	Base-Neutral-Acid Analysis	4-8
4.6.2	Volatile Organics Analysis	4-8
4.6.3	Anions Analysis	4-9
4.6.4	Metals Analysis	4-9
4.6.5	pH Measurements	4-10
4.6.6	Particulates	4-10
5	TEST RESULTS	5-1
5.1	Introduction	5-1
5.2	Process Data	5-1
5.2.1	Process Data Acquisition and Recording	5-1
5.2.2	Orsat	5-1
5.2.3	Chemical Agent Feed Rate	5-1

TABLE OF CONTENTS (cont'd)

Section		Page
5.3	Results From the Determination of Semivolatile Organics	5-2
	5.3.1 General	5-2
	5.3.2 Results	5-2
	5.3.3 Sample Calculations	5-3
	5.3.3.1 Aqueous Process Samples (Bis(2-ethylhexyl)phthalate in Caustic)	5-3
	5.3.3.2 MM5 Trains (for Benzyl Alcohol)	5-3
5.4	Dioxins and Furans (PCDD/F)	5-3
	5.4.1 Results	5-3
	5.4.2 Sample Calculation	5-4
5.5	Volatile Organics Analysis	5-5
	5.5.1 Results	5-5
	5.5.2 Sample Calculations	5-5
	5.5.2.1 Aqueous Process Samples (TR 4 Process Water Pre Test for Bromoform)	5-5
	5.5.2.2 VOST Tubes (TR 4 Pair 3 Tenex for Benzene)	5-6
5.6	Anions Analysis	5-6
	5.6.1 Chlorides in Stack Gas	5-6
	5.6.2 Anions in Liquid Process Samples	5-6
5.7	Metals Analysis	5-7
5.8	Reactivity and pH Analysis	5-8
5.9	Particulate Measurements	5-9
	5.9.1 Mass Flow	5-9
	5.9.2 Particle Size Distribution	5-9
5.10	Chemical Agent - POHC	5-10
	5.10.1 Results	5-10
	5.10.2 Destruction and Removal Efficiency	5-10
5.11	Total Hydrocarbons	5-11

TABLE OF CONTENTS (cont'd)

Section		Page
6	QUALITY ASSURANCE AND QUALITY CONTROL	6-1
	6.1 Background	6-1
	6.2 Semivolatile Organic Analysis	6-2
	6.3 Volatile Organic Analysis	6-3
	6.4 Metals Analysis	6-4
	6.5 HCl Analysis	6-6
	6.6 Dioxin	6-6
	6.7 QA/QC Summary	6-7

APPENDICES

A	Chain of Custody and Log Sheets
B	Operator's Log
C	Process Data
D	Sampling Data
E	Continuous Emission Monitor Data
F	METCO Environmental Source Emissions Survey
G	Test Plan and Contract Modifications
H	Dioxin
I	GC/MS Volatiles
J	GS/MS Semivolatiles
K	Filter Weights Acetone Residue
L	Anion Analyses
M	Metal Analysis
N	TCLP
O	Field Notebook H-129

TABLE LIST

Table No.		Page
2-1	Summary of System Test Conditions and Results	2-6
2-2	Metal Analyses of Process Samples and Fuel Oil	2-7
2-3	System Performance for Metals	2-10
2-4	Metal Analyses Results of Slag	2-11
2-5	Semivolatile Products of Incomplete Combustion	2-12
2-6	Volatile Products of Incomplete Combustion	2-13
2-7	Stack Gas Analysis for Dioxins and Furans	2-14
2-8	Anions In Process Liquid Samples	2-15
2-9	Total Hydrocarbons in Stack Gas	2-16
3-1	LIC Sampling Locations	3-5
3-2	Location of Sampling Points for Method 5 Acid Train, Multiple Metals Train, and Particulates	3-6
3-3	Location of Sampling Points for MM5 Train and Particle Sizing	3-7
3-4	Facilities Emissions Monitoring Instrumentation	3-8
5-1	MPF PDAR Data	5-12
5-2	Process Data From Manual Stack Sampling	5-14
5-3	Integrated Orsat Stack Data	5-15
5-4	Agent HD and Decontamination Solution Feed Rates to the LIC	5-16
5-5	Modified Method 5 Train Conditions and Results	5-17
5-6	Stack Gas Analysis for Semivolatile Products of Incomplete Combustion	5-18
5-7	Semivolatile Results Summary for MM5 Train	5-19
5-8	Semivolatile Tentatively Identified Compound Results for MM5 Train	5-20
5-9	Semivolatile Results in Slag Leachate	5-25

TABLE LIST (cont'd)

Table No.		Page
5-10	Process Samples, Semivolatile Results Summary, Test Run 1	5-26
5-11	Process Samples, Semivolatile Results Summary, Test Run 2	5-27
5-12	Process Samples, Semivolatile Results Summary, Test Run 3	5-28
5-13	Process Samples, Semivolatile Results Summary, Test Run 4	5-29
5-14	Stack Gas Analyses for Dioxins and Furans	5-30
5-15	Determination of Total PCDDs/PCDFs in MM5 Trains	5-31
5-16	Determination of Target PCDDs/PCDFs in MM5 Trains	5-33
5-17	Determination of Total PCDDs/PCDFs in Process Water Samples	5-37
5-18	Determination of Total PCDDs/PCDFs in Scrubber Liquor Samples	5-38
5-19	Determination of Total PCDDs/PCDFs in Brine Samples	5-39
5-20	Determination of Total PCDDs/PCDFs in Caustic Samples	5-40
5-21	Determination of Total PCDDs/PCDFs in Fuel Samples	5-41
5-22	Determination of Target PCDDs/PCDFs in Slag	5-42
5-23	Determination of Total PCDDs/PCDFs in Slag	5-44
5-24	Stack Gas Analyses for Volatile Products of Incomplete Combustion	5-45
5-25	VOST Volatile Organics Results Summary, Test Run 1	5-46
5-26	VOST Volatile Organics Results Summary, Test Run 2	5-48
5-27	VOST Volatile Organics Results Summary, Test Run 3	5-50
5-28	VOST Volatile Organics Results Summary, Test Run 4	5-52

TABLE LIST (cont'd)

Table No.		Page
5-29	Aqueous Volatile Organics Summary	5-54
5-30	Method 5 Acid Train Conditions and Results	5-56
5-31	Acid Train Results, Test Run 1	5-57
5-32	Acid Train Results, Test Run 2	5-58
5-33	Acid Train Results, Test Run 3	5-59
5-34	Acid Train Results, Test Run 4	5-60
5-35	Anion Results in Process Samples, Test Run 1	5-61
5-36	Anion Results in Process Samples, Test Run 2	5-62
5-37	Anion Results in Process Samples, Test Run 3	5-63
5-38	Anion Results in Process Samples, Test Run 4	5-64
5-39	Anion Detection Limits	5-65
5-40	Method 5 Multiple Metals Train Conditions and Results	5-66
5-41	Stack Gas Analyses for Metals	5-67
5-42	Metals Train Results - Test Run 1	5-68
5-43	Metals Train Results - Test Run 2	5-69
5-44	Metals Train Results - Test Run 3	5-70
5-45	Metals Train Results - Test Run 4	5-71
5-46	TCLP Metal Analysis Results - Test Run 1 Process Samples	5-72
5-47	TCLP Metal Analysis Results - Test Run 2 Process Samples	5-73
5-48	TCLP Metal Analysis Results - Test Run 3 Process Samples	5-74
5-49	TCLP Metal Analysis Results - Test Run 4 Process Samples	5-75
5-50	Metal Analyses of Slag TCLP Extract	5-76

TABLE LIST (cont'd)

Table No.		Page
5-51	Reactivity and pH	5-77
5-52	Agent Feed Rate and DRE	5-78
5-53	Total Hydrocarbons in Stack Gas	5-79
6-1	Recoveries of 10J Resin Field Spike	6-8
6-2	Semivolatile Results Summary, Laboratory Blanks	6-9
6-3	Semivolatile Quality Control Analyses	6-10
6-4	VOST Audit Results	6-11
6-5	VOA QC Analysis, Test Run 3 Process Water Pre Test	6-12
6-6	VOA QC Analysis, Test Run 3 Liquor Pre Test	6-13
6-7	VOA QC Analysis, Test Run 3 Brine Pre Test	6-14
6-8	VOA QC Analysis, Test Run 3 Caustic Pre Test	6-15
6-9	Metals QC Table, Process Water Post Test, Test Run 3, Sample No. 10J-4-140	6-16
6-10	Metals QC Table, Scrubber Brine Post Test, Test Run 3, Sample No. 10J-4-124	6-17
6-11	Metals QC Table, Scrubber Liquor Post Test, Test Run 3, Sample No. 10J-4-116	6-18
6-12	Metals QC Table, Caustic Post Test, Test Run 3, Sample No. 10J-4-132	6-19
6-13	Metals QC Table, Fuel Oil Post Test, Test Run 3, Sample No. 10J-4-145	6-20
6-14	MMT Metals Analysis QC, Front Half	6-21
6-15	MMT Metals Analysis QC, Back Half	6-22
6-16	Slag TCLP Extract Metals QC Table, Sample No. 10J	6-23
6-17	Acid Train QC, Water MS/MSD Results	6-24
6-18	Acid Train QC, NaOH MS/MSD Results	6-25
6-19	Acid Train QC, H_2SO_4 MS/MSD Results	6-26

TABLE LIST (cont'd)

Table No.		Page
6-20	Fuel Oil Anion QC Results, Sample 10J-4-144	6-27
6-21	Brine Anion QC Results, Sample 10J-4-124	6-28
6-22	Scrubber Liquor Anion QC Results, Sample 10J-4-116	6-29
6-23	Caustic Anion QC Results, Sample 10J-4-132	6-30
6-24	Process Water Anion QC Results, Sample 10J-4-140	6-31
6-25	Anion Results, Field QC Samples	6-32
6-26	Target PCDFs/PCDDs in MM5 Trains QC Analyses	6-33
6-27	Total PCDFs/PCDDs in MM5 Trains QC Analyses	6-35
6-28	Total PCDFs/PCDDs in Process Water QC Analyses	6-36
6-29	Total PCDFs/PCDDs in Scrubber Liquor QC Analyses	6-37
6-30	Total PCDFs/PCDDs in Brine QC Analyses	6-38
6-31	Total PCDFs/PCDDs in Caustic QC Analyses	6-39
6-32	Total PCDFs/PCDDs in Fuel Oil QC Analyses	6-40

FIGURE LIST

Figure No.		Page
3-1	Location of Johnston Island	3-9
3-2	Johnston Island	3-10
3-3	LIC Diagram	3-11
3-4	LIC PAS Diagram	3-12
3-5	MPF, DFS, and LIC Stack Sample Point Locations	3-13
4-1	LIC Sample Locations	4-11
4-2	LIC PAS Sample Locations	4-12
5-1	TR #1: LIC-102 Secondary Chamber O_2	5-80
5-2	TR #1: LIC-102 Secondary Chamber CO	5-81
5-3	TR #1: LIC-102 Exhaust Temperature	5-82
5-4	TR #1: LIC-101 Agent Feed	5-83
5-5	Differential Mass Size Distribution for LIC HD Test Runs 1 Through 4	5-84
5-6	Particle Size Distribution on Cumulative Percent by Mass Smaller Than Size for LIC HD Test Runs 1-4	5-85

LIST OF ACRONYMS

ACAMS	-	Automatic Continuous Air Monitoring System
ASC	-	Allowable Stack Concentration
CAMDS	-	Chemical Agent Munitions Disposal System
CEM	-	Continuous Emission Monitor
DAAMS	-	Depot Area Air Monitoring System
DFS	-	Deactivation Furnace System
DOT	-	Department of Transportation
DRE	-	Destruction and Removal Efficiency
DS	-	Decontamination Solution
DUN	-	Dunnage Incinerator
EPA	-	Environmental Protection Agency
FPD	-	Flame Photometric Detector
GB	-	Nerve Agent
GC	-	Gas Chromatograph
GC/MS	-	Gas Chromatograph/Mass Spectrometry
GPD	-	Gas Plasma Display
HD	-	Mustard Agent
HRGC/HRMS	-	High Resolution Gas Chromatography/High Resolution Mass Spectrometry
ICP	-	Inductively Coupled Plasma Atomic-Emission Spectrometry
in. w.c.	-	inches in water column
JACADS	-	Johnston Atoll Chemical Agent Disposal System
LIC	-	Liquid Incinerator System
LOQ	-	Limit of Quantification
M5AT	-	Method 5 Acid Train
MDB	-	Munitions Demilitarization Building
MM5	-	Modified Method 5
MMT	-	Multiple Metals Train

LIST OF ACRONYMS

MPF	-	Metal Parts Furnace
MS	-	Mass Spectrometry
NBS	-	National Bureau of Standards
OVT	-	Operational Verification Test(ing)
PAS	-	Pollution Abatement System
PCDD/F	-	Polychlorinated dibenzo-p-dioxins and Polychlorinated dibenzo furans
PDAR	-	Process Data Acquisition and Recording
PICs	-	Products of Incomplete Combustion
PMCD	-	Program Manager for Chemical Demilitarization
POHC	-	Principal Organic Hazardous Constituent
QA	-	Quality Assurance
QC	-	Quality Control
RCRA	-	Resource Conservation and Recovery Act
SDS	-	Spent Decontamination Solution
S/F	-	Shipping and Firing
SRI	-	Southern Research Institute
SwRI	-	Southwest Research Institute
TCDD/F	-	Tetrachlorodibenzodioxin/furan
TCLP	-	Toxicity Characteristic Leachate Procedure
TE	-	Toxicity Equivalent
THC	-	Total Hydrocarbons
TSCA	-	Toxic Substance Control Act
UE&C	-	United Engineers & Constructors Inc.
USACMDA	-	United States Army Chemical Materiel Destruction Agency
VOA	-	Volatile Organic Analysis
VOST	-	Volatile Organic Sampling Train
VX	-	Nerve Agent

LIST OF ACRONYMS

XAD-2 - A Resin Used in Sampling

RESULTS OF THE DEMONSTRATION TEST BURN FOR
THERMAL DESTRUCTION OF AGENT HD IN THE
JOHNSTON ATOLL CHEMICAL AGENT DISPOSAL SYSTEM LIQUID INCINERATOR

EXECUTIVE SUMMARY

This report summarizes the results of a Demonstration Test Burn which was conducted over and above the Resource Conservation and Recovery Act (RCRA) performance requirements for the Liquid Incinerator System (LIC). Upon completion of Metal Parts Furnace (MPF) furnace systemization, a RCRA trial burn was scheduled. The MPF trial burn processed Agent HD ton containers which had been drained of agent. In concert with the MPF trial burn, this demonstration test burn was conducted to show that the LIC incinerator could process significant quantities of Agent HD in a normal operation mode while being safe and protective of the environment. The demonstration test burn provided an opportunity to perform additional testing on the LIC system above and beyond that required by RCRA.

United Engineers & Constructors (UE&C), in concert with other subcontractors, coordinated and performed this demonstration test burn from August 19 to August 25, 1992. The demonstration test burn was conducted in the LIC while processing mustard Agent HD drained from ton containers. Agent HD (1,1'thiobis[2-chloroethane]) was drained from the containers, quantified, accumulated for short periods of time, then fed to the LIC. Agent HD was the primary LIC hazardous waste feed. As such, HD was considered the equivalent principal organic hazardous constituent (POHC) for the demonstration test burn. The LIC burn consisted of four sequential test runs lasting approximately four hours each, during which considerable sampling and analyses were performed. The purpose of the testing and analysis was to verify that the LIC could efficiently destroy HD while being protective of human health and the environment. This report summarizes the field activities, chemical analyses, and data analyses associated with these tests.

The specific objectives of this effort were to:

1. Demonstrate that the LIC is capable of performing at a level equal to or better than the following basic RCRA hazardous waste incineration performance standards:

   a. Verify by analysis that at least 99.99% of all HD fed to the LIC was destroyed - destruction and removal efficiency (DRE).

   b. Show by analysis and testing that the stack particulate emissions are maintained below 180 mg/dscm (0.08 grains per dry standard cubic foot corrected to 7% oxygen) when processing hazardous waste.

   c. Maintain hydrochloric acid (HCl) emissions in the stack gases below 4 lb/hr or achieve a 99% HCl removal efficiency.

2. Operate the LIC such that the one hour rolling average carbon monoxide concentration (corrected to 7% oxygen) in the exhaust gas downstream

of the afterburner is maintained below 100 ppm with no greater than 200 ppm spikes of less than 5 minutes duration.

In addition to demonstrating equivalent RCRA performance capabilities, the LIC system exhaust gas was monitored for the following:

- Agent HD
- Oxygen (O_2)
- Carbon Monoxide (CO)
- Carbon Dioxide (CO_2)
- Volatile and semivolatile products of incomplete combustion (PICs)
- Polychlorinated dibenzo-p-dioxins and furans (PCDD/F)
- Trace Metals
- Total Hydrocarbons
- Oxides of nitrogen(NO_x)
- Sulfur dioxide(SO_2)

Samples of LIC system solid and liquid materials were taken and analyzed for:

- Volatile and semivolatile PICs
- PCDD/Fs
- Trace Metals
- Chlorides, fluorides, phosphates and sulfates
- Reactivity and pH

During each of the four test runs which comprised the demonstration test burn, stack gases were sampled and analyzed to assess the system performance. In addition, process liquids and solids were sampled for analysis. Liquids, such as scrubber brines, and solids, such as slag, were analyzed to characterize the overall LIC system performance.

Exhaust gas was sampled for both organic and inorganic PICs, such as volatile compounds, semivolatile compounds, particulate matter, metals and hydrogen chloride (HCl). Solid and liquid wastes generated by the pollution abatement system (PAS) and slag residues were analyzed to identify any hazardous constituents that might be present.

The LIC operational parameters were monitored to ensure adherence to RCRA permit performance requirements, to demonstrate compliance with performance criteria and to calculate energy and material balances.

During all four test runs, regardless of what the Agent HD (POHC) loading on the LIC system was, the Automatic Continuous Air Monitoring System (ACAMS) did not detect any agent concentration in the stack gas above the Limit of Quantification (LOQ). The Agent HD hourly feed rate to the LIC averaged from 849 pounds per hour (lb/hr) to 1320 lb/hr. To calculate the DRE, the LOQ value was used recognizing that the actual DRE would be higher than the calculated value. The calculated DRE for the demonstration test burn ranged from 99.999953% to 99.999975%. This indicated that the average potential Agent HD emission rate was less than one-three hundredth of the allowable based on the RCRA required DRE of 99.99%.
The CO concentration in the exhaust gas was continuously maintained below 20 ppm which is one-fifth of the permit requirement of maintaining an hourly rolling average of less than 100 ppm CO corrected to 7% oxygen.

The particulate matter emission concentration averaged 2.56 mg/dscm, with the highest emission being 3.22 mg/dscm. The highest particulate emission concentration was less than 2% of the allowable rate of 180 mg/dscm.

Only one of the four test runs generated HCl above the detection limit of the analytical monitoring procedure used. The HCl emission rate for that one run was 0.02 lb/hr, one half of 1% of the allowed limit of 4 lb/hr.

The results of the Demonstration Test Burn with Agent HD feed for the LIC showed it performed well within the defined RCRA permit parameters.

RESULTS OF THE DEMONSTRATION TEST BURN FOR THERMAL DESTRUCTION OF AGENT HD IN THE JOHNSTON ATOLL CHEMICAL AGENT DISPOSAL SYSTEM LIQUID INCINERATOR

1.0 INTRODUCTION

1.1 PURPOSE OF THE TEST PROGRAM

Under Congressional mandate, the Department of the Army must dispose of existing stocks of chemical warfare agents and munitions. To implement this directive, the Army plans to construct eight munitions demilitarization facilities at existing munitions storage depots in the United States.

The first fully integrated demilitarization facility, the Johnston Atoll Chemical Agent Disposal System (JACADS), was constructed at Johnston Atoll in the Pacific Ocean. JACADS was constructed for the full-scale demilitarization and thermal decontamination of chemical munitions and storage containers which contain nerve agents (GB and VX) and mustard agent (HD). The JACADS facility consists of:

- the Liquid Incinerator System (LIC), used to burn the chemical agents
- the Deactivation Furnace System (DFS) for processing rockets and destroying energetic materials
- the Metal Parts Furnace (MPF) for thermally decontaminating drained storage containers, bombs and projectiles (explosive materials removed)
- the Dunnage Incinerator (DUN), for processing dunnage material, such as cardboard and wooden boxes, used for munition shipment and storage

The Army has scheduled Operational Verification Testing (OVT) at the JACADS facility. The completion of the OVT at Johnston Atoll is pivotal because, by Congressional Order, no chemical-agent disposal may be conducted at any depot except the Chemical Agent Munitions Disposal System (CAMDS) located at Tooele Army Depot in Tooele, Utah, until the completion of the performance evaluation at Johnston Atoll.

This Demonstration Test Burn was conducted as part of OVT-3, in which ton containers containing Agent HD were drained and processed through the MPF. Integrated with the testing conducted at the MPF, the drained agent was processed in the LIC. Testing of the LIC with Agent HD is not mandated by permit requirements. The objective was to completely characterize the system performance under all conditions of operation.

This document reports the results of the LIC Demonstration Test Burn, which was conducted on August 19, 21, 22 and 25, 1992. This report was prepared by UE&C for the Program Manager for Chemical Demilitarization (PMCD). The sampling described here was carried out by Southern Research Institute (SRI) under subcontract to UE&C as a part of its prime contract (DACA87-86-C-0098) with PMCD.

Throughout these tests, the LIC was evaluated against Resource Conservation and Recovery Act (RCRA) performance standards for hazardous waste incinerators. These system-performance criteria pertained to the destruction and removal efficiency (DRE) of the principal organic hazardous constituent (POHC); the

emission from the exhaust stack of particulate matter, carbon monoxide, and acid gas; and the various parameters relating to the LIC operation. The pertinent criteria may be summarized as follows:

- The DRE of chemical agent (POHC) must be 99.99% or greater.
- Particulate emissions from the exhaust stack must not exceed 180 mg/dscm (0.08 grains per dry standard cubic foot) when corrected to 7% oxygen content in the exhaust gas.
- The removal of HCl from the exhaust gas by the pollution abatement system (PAS) must be 99% or greater, or the HCl emission rate must be less than 4 lb/hr.
- The one hour rolling average concentration of carbon monoxide in the stack gas (corrected to 7% oxygen) must be less than 100 ppm and the peak concentration, for five minutes maximum, must not exceed 200 ppm (also corrected to 7% oxygen).

Federal regulations require agent concentration in the stack to be below the Allowable Stack Concentration (ASC), equal to 0.03 mg/m^3 and Army regulations require that no detectable agent be released to the atmosphere. In addition, the following were carried out:

- Monitor the LIC exhaust-stack emissions for:
  - O_2 (oxygen)
  - CO_2 (carbon dioxide)
  - Volatile and semivolatile PICs
  - Polychlorinated dibenzo-p-dioxins and Polychlorinated dibenzo furans (PCDD/F)
  - Trace Metals
  - CO (carbon monoxide)
  - SO_2
  - NO_x
  - Total Hydrocarbons
  - Particle Size Distribution
- Analyze the incinerator liquid process samples for:
  - Volatile and semivolatile products of incomplete combustion (PICs)
  - PCDD/F
  - Cl^- (Chloride, soluble)
  - F^- (Fluoride, soluble)
  - PO_4^{-3} (Phosphate, soluble)
  - pH

1.2 SCOPE OF THIS REPORT

This report presents the test procedures and results for the HD demonstration test burn (i.e., four test runs) in the LIC at JACADS, as well as the findings from the concomitant evaluation of the associated PAS.

The sampling team included two sampling coordinators and a chemist from SRI and an eight-member sampling crew. The sample analyses for organics and inorganics were performed by SRI in SRI's Birmingham laboratories. METCO Environmental was a subcontractor to SRI to perform some of the field activities. Observers were

present from the Environmental Protection Agency (EPA), United States Army Chemical Materiel Destruction Agency (USACMDA), PMCD, Southwest Research Institute (SwRI), EPA's contractor Midwest Research Institute and United Engineers & Constructors Inc. (UE&C).

2.0 SUMMARY OF DATA

A summary of Liquid Incinerator (LIC) system performance relative to Resource Conservation and Recovery Act (RCRA) criteria is presented in Table 2-1.

The emissions from the stack and in the blower duct were monitored for HD vapor (the designated principal organic hazardous constituent (POHC)) with the automatic continuous air monitoring system (ACAMS), which is an automatic gas chromatograph that is designed to analyze chemical agents GB, VX or HD. The ACAMS was capable of detecting and quantifying chemical agent concentrations at approximately one-fifth of the Allowable Stack Concentration (ASC). No HD was detected at either location during any of the four test runs. For this reason the destruction and removal efficiency (DRE) was calculated using the ACAMS limit of quantification (LOQ). Thus, in each instance where a DRE appears, it is expressed as a greater than number. The DRE for HD ranged from >99.999953% to >99.999975%. These values are well above the RCRA DRE requirement of 99.99%.

Particulate emissions, corrected to 7% O_2, in the stack ranged from 0.54 to 5.06 mg/dscm based on Method 5 Acid Train (M5AT) data and from 0.84 to 2.28 mg/dscm based on the Multiple Metals Train (MMT) data. The average of the M5AT and MMT particulate concentrations ranged from 1.41 to 3.22 mg/dscm. These concentrations are less than 2% of the 180 mg/dscm allowed.

HCl was detected in the stack gas at less than 0.02 lb/hr during one of the four test runs. No HCl was detected during the other three test runs. This is less than 1/2 of 1% of the allowable emission rate of 4.0 lb/hr.

The secondary chamber exhaust CO concentration (corrected to 7% oxygen) averaged over the four hours for each test run ranged from 14.4 to 18.5 ppm. These low values demonstrate good combustion efficiency with low products of incomplete combustion (PICs).

Summarizing the above results:

	TR #1	TR #2	TR #3	TR #4
DRE - HD, %	>99.999965	>99.999953	>99.999975	>99.999972
Particulates, mg/dscm	1.41	3.22	2.86	2.76
HCl, lb/hr	ND	ND	0.0165	ND
Average CO, ppm	18.5	14.4	15.5	16.0

2.1 STEADY STATE OPERATING CONDITIONS

The Johnston Atoll Chemical Agent Disposal System (JACADS) RCRA Part B permit requires that the furnace is operating at steady state conditions prior to introduction of any hazardous waste. Based on a review of the process data acquisition and recording (PDAR) system data, the furnace was operating at steady state conditions.

The range of average exhaust gas temperatures from the Primary Chamber during the four hour test runs was between 2708 and 2711°F as shown in Table 2-1. The

average secondary chamber exhaust gas temperature during each run was between 2002 and 2024°F. These primary and secondary chamber temperatures are well within the required range of 2700 ± 150°F and 2000 ± 150°F, respectively.

2.2 DESTRUCTION OF CHEMICAL AGENT

Stack emissions of HD were not detected during the LIC demonstration test burn. The stack was monitored both in the stack house and in the blower duct. The sensitivity (LOQ) of the HD monitoring system, i.e., the ACAMS, was approximately one fifth of the ASC (0.03 mg/m^3) for HD in all four tests. Based on this level of capability, the actual level of HD that could have been detected was below 0.006 mg/m^3. More than one ACAMS was used to monitor the stack. These are located at the blower (one ACAMS) and the exhaust stack (two ACAMS, one operating with the other on standby).

2.3 PARTICULATE EMISSIONS

Data from the M5AT and MMT were used to calculate particulate emissions.

Particulate concentrations (corrected to 7% O_2) in the four LIC test runs were, respectively, 0.54, 5.06, 4.87 and 4.39 mg/dscm from the M5AT results and 2.28, 1.37, 0.84 and 1.13 mg/dscm from the MMT results. Hence, the LIC particulate emission levels were well below the RCRA particulate limit of 180 mg/dscm at an oxygen content of 7% in the stack. The corresponding measured particulate concentrations after correction of the data to 12% CO_2 (this is not a RCRA requirement but is required by certain state agencies) were 0.645, 6.17, 6.22 and 5.59 mg/dscm from the M5AT and 2.86, 1.71, 1.06 and 1.39 mg/dscm from the MMT.

The particle size distribution, measured as a composite of all four test runs, was found to be bimodal, with about 70% of the particulate matter in a mode centered at about 0.3 μm and the remaining 30% in a mode centered at about 3 μm. The very low particulate concentrations in the stack gases precluded making individual measurements for each test run.

2.4 HCl EMISSIONS

No HCl was detected in the stack gas (detection limit, <0.004 lb/hr) in three of the four test runs. A measurable emission rate of less than 0.02 lb/hr was found in Test Run 3. The allowable limit for HCl emission is 4 lb/hr or 99% removal. Thus, the HCl emission rate for each test run was less than 0.5% of the limit.

2.5 CARBON MONOXIDE

CO is measured just downstream of the secondary chamber and in the stack gas. The post secondary chamber measurement is controlled by the RCRA permit. The hourly rolling average is limited to below 100 ppm (corrected to 7% O_2) with peaks of 200 ppm of less than five minutes duration allowed.

The post secondary chamber CO concentration averaged over each four hour test run ranged from 14.4 to 18.5 ppm. The PDAR data shows that for all four test runs, the CO concentration was consistently less than 20 ppm. Data showing a few momentary spikes are nearly all attributable to cleaning the oxygen sampling probe with compressed air. Maintaining a consistently low CO concentration is an indication of system control and good combustion efficiency.

2.6 METALS

2.6.1 Analysis of Liquid Process Samples for Metals

The process samples and fuel oil were analyzed for the eight RCRA Toxicity Characteristic Leachate Procedure (TCLP) metals (arsenic, barium, cadmium, chromium, mercury, selenium, silver, lead) and for nine additional metals (beryllium, tin, antimony, zinc, cobalt, nickel, vanadium, copper, thallium).

None of the TCLP metals were found in concentrations exceeding the regulatory limit.

Table 2-2 lists the non-TCLP metals which were found in quantifiable concentrations. Presently there are no federal regulatory limits applicable to the concentration of the non-TCLP metals. They were included in the analyses to more completely characterize the system and to provide data which could potentially apply to Continental United States (CONUS) siting and/or future regulations.

2.6.2 Stack Emissions of Metals

MMT samples were tested for 20 metals including all eight of the RCRA characteristic TCLP metals. Thirteen metals were found in one or more of the samples. In some cases, these metals were also found in the blanks. Four of the thirteen metals, manganese, boron, zinc, and phosphorus, were present in all four test run samples. Currently there is no RCRA limit applicable to these emissions from hazardous waste incinerators, but it should be noted that the concentration of most metals was near the applicable method detection limit.

Table 2-3 lists the samples and metals for which a quantifiable amount was found.

2.6.3 Slag Leachate

A composite leachate sample was made from the LIC slag. Table 2-4 provides the results of the TCLP analyses of the slag extract sample. Analyses were performed for the eight TCLP metals as well as nine additional metals. Of the TCLP metals, only chromium was found at a concentration above the regulatory limit. There is no RCRA standard for the non-TCLP metals. However, those found were present in low concentrations.

The presence of Cr above the regulatory limit means the slag must be disposed of in a RCRA regulated landfill.

2.7 PRODUCTS OF INCOMPLETE COMBUSTION

The MM5 train samples, fuel oil samples, refractory salt and aqueous process samples were analyzed for the presence of volatile and semivolatile PICs. At this time, there is no regulatory limit with which to compare these results.

Table 2-5 presents the results for stack emissions of semivolatile PICs.

Table 2-6 presents the results for stack emissions of volatile PICs.

Results for the fuel oil, process samples and slag leachate are discussed in Section 5.3.2 of this report.

2.8 DIOXIN/FURAN EMISSIONS

The stack gas, process samples and fuel oil were sampled for the presence of polychlorinated dibenzo-p-dioxins/polychlorinated dibenzo furans (PCDD/F).

Some dioxins were detected in the stack at levels above those associated with the blank samples, but the values detected were near the detection limits. These are summarized in Table 2-7.

The levels of dioxins and furans found in the stack gas were low and for the most part close to the detection limit. The maximum concentration was 1.076 ng/dscm, during Test Run 3.

As a comparison, previous studies of municipal incinerators have demonstrated emissions of dioxins in the range of 50-7000 ng/dscm. Moreover, previous conversations with Environmental Protection Agency (EPA) personnel involved in the assessment of incinerator performance suggest that dioxin/furan emissions of 10 ng/dscm should not cause concern. The maximum concentration found was approximately one-tenth of this level.

Results for the fuel oil and process samples are discussed in Section 5.4 of this report.

2.9 ANIONS IN PROCESS SAMPLES

The process liquids and fuel oil were analyzed for Cl^-, F^-, PO_4^{-3} and SO_4^{-2}. Table 2-8 summarizes the results of these analyses.

No phosphates were detected in any of the samples. This is as expected since HD is not a phosphorous containing compound. No increase in fluoride concentration was noted between pre and post run samples. HD is not a fluoride containing compound and no increase in fluoride concentrations was expected.

The post test results for the brine, and for the scrubber liquor, showed increases in Cl^- and SO_4^{-2} when compared to the pretest samples. This was expected, since Agent HD contains chlorine and sulphur atoms. Chloride and sulfate detection in these samples demonstrates that the scrubber is removing the acidic combustion products from the exhaust gas stream.

2.10 TOTAL HYDROCARBONS

Total hydrocarbons (THC) in the stack gas were determined by EPA Method 25A. The results are presented in Table 2-9.

This data was taken to characterize the emissions. It is not subject to any regulatory limits.

2.11 QUALITY ASSURANCE/QUALITY CONTROL

Assuring valid results in a sampling and analysis program of the type carried out during the Metal Parts Furnace (MPF) HD Trial Burn requires that a thorough quality assurance/quality control (QA/QC) program be followed. Such a QA/QC program was followed for all sampling and laboratory functions for this trial burn.

Typical procedures followed, as appropriate for each sample, included:

- instrument and sampling system calibrations
- initial and continuing instrument calibration verifications
- sample preservation and identification
- replicate samples and analyses
- analysis of blank samples, matrix spikes and surrogates
- maintaining complete chain of custody documentation for all samples

A more detailed discussion of the QA/QC program, as it relates to each type of sample, is found in Section 6 of this report.

TABLE 2-1

SUMMARY OF SYSTEM TEST CONDITIONS AND RESULTS

Parameter	Units	Demonstration Test Burn				
		TR1	TR2	TR3	TR4	Requirement
HD Feed Rate	lb/hr	849	957	1320	1179	<1330
HD Concentration	mg/m^3	ND[a]	ND	ND	ND	<0.03
Avg. Exhaust Gas Temp.	°F					
Primary Chamber		2710	2711	2708	2710	2700 ± 150
Secondary Chamber		2024	2008	2015	2002	2000 ± 150
DRE - HD	%	>99.999965	>99.999953	>99.999975	>99.999972	≥99.99
Particulate Matter[b]						
Corrected to 7% O_2	mg/dscm	1.41	3.22	2.86	2.76	<180
Corrected to 12% CO_2	mg/dscm	1.75	3.94	3.64	3.49	
Stack Gas Flow[b]	acfm	14,033	13,883	13,815	14,070	
	dscfm	7,144	6,754	6,674	6,901	
HCl Emissions	lb/hr	ND[c]	ND	0.02	ND	<4
Oxygen[d]	%	14.5	14.2	14.0	14.5	
Carbon Dioxide[d]	%	4.6	4.7	4.6	4.4	
Carbon Monoxide[e]	ppm	18.5	14.4	15.5	16.0	≤100 ppm hourly average

[a]ND = Not Detected. Detection limits 0.0057, 0.0087, 0.0063, 0.0063 for Test Runs 1-4 respectively.
[b]Average of M5AT and MMT results.
[c]ND = Not Detected. Detection limits 0.0028, 0.0037 and 0.0036 lb/hr for Test Runs 1, 2, and 4 respectively.
[d]Orsat values (at the stack).
[e]Secondary Chamber Exhaust CO Conc. (corrected to 7% O_2 on a dry basis) averaged over entire test run (4 hours).

LICHD2.V51

TABLE 2-2

METAL ANALYSES OF PROCESS SAMPLES AND FUEL OIL
(mg/L)

	TR1	TR2	TR3	TR4
TCLP METALS FOUND IN QUANTIFIABLE CONCENTRATION				
Scrubber Liquor Pre Test				
Chromium (5.0)[a]	0.42	0.11	0.076	0.28
Lead (5.0)	0.35	0.079	0.069	0.21
Scrubber Liquor Post Test				
Chromium (5.0)	0.32	0.097	<0.10	0.31
Cadmium (1.0)	<0.02	<0.02	0.062	0.033
Lead (5.0)	0.11	0.054	<0.05	0.88
Scrubber Brine Pre Test				
Arsenic (5.0)	0.77	1.39	0.73	0.95
Selenium (1.0)	0.38	0.47	0.30	0.38
Chromium (5.0)	2.57	1.00	1.08	1.00
Cadmium (1.0)	0.05	0.04	0.02	0.03
Lead (5.0)	0.74	0.32	0.21	0.38
Mercury (0.2)	0.002	0.002	0.002	0.001
Scrubber Brine Post Test				
Arsenic (5.0)	1.05	1.41	1.72	1.25
Selenium (1.0)	0.48	0.42	0.69	0.47
Chromium (5.0)	2.07	1.06	0.83	0.43
Cadmium (1.0)	0.04	0.04	0.04	0.03
Lead (5.0)	0.47	0.28	0.28	0.27
Mercury (0.2)	0.002	0.001	0.001	0.003
Caustic Pre Test				
Arsenic (5.0)	<0.05	0.06	<0.05	<0.05
Selenium (1.0)	<0.05	0.09	<0.08	<0.05
Chromium (5.0)	<0.02	<0.02	<0.02	<0.02
Cadmium (1.0)	<0.02	0.11	<0.02	<0.02
Lead (5.0)	0.10	0.19	0.11	0.18
Barium (100.0)	<0.10	<0.10	0.20	0.17
Caustic Post Test				
Arsenic (5.0)	<0.05	<0.05	0.10	<0.05
Lead (5.0)	0.11	<0.05	0.16	0.14
Barium (100.0)	<0.10	<0.10	<0.17	0.15

[a]Numbers in parenthesis are regulatory limit, mg/L.

TABLE 2-2

METAL ANALYSES OF PROCESS SAMPLES AND FUEL OIL
(mg/L)

	TR1	TR2	TR3	TR4
NON-TCLP METALS FOUND IN QUANTIFIABLE CONCENTRATIONS				
Scrubber Liquor Pre Test				
Tin	<0.10	<0.10	<0.10	<0.10
Zinc	0.42	0.21	0.48	0.31
Nickel	0.066	0.053	0.094	0.10
Vanadium	<0.02	<0.02	<0.02	<0.02
Copper	0.23	0.10	0.10	0.33
Scrubber Liquor Post Test				
Tin	<0.10	0.21	<0.10	<0.10
Zinc	0.16	0.16	0.17	1.09
Nickel	0.056	0.057	0.056	0.98
Vanadium	<0.02	<0.02	<0.02	0.023
Copper	0.19	0.08	0.21	0.99
Scrubber Brine Pre Test				
Zinc	2.10	1.12	0.98	1.00
Nickel	1.98	0.70	0.72	0.80
Vanadium	0.72	0.26	0.19	0.24
Copper	1.60	1.54	0.96	1.72
Scrubber Brine Post Test				
Zinc	0.18	1.18	1.28	0.96
Nickel	3.36	1.00	0.68	0.80
Vanadium	0.30	0.26	0.36	0.26
Copper	1.66	1.60	2.02	1.50
Caustic Pre Test				
Tin	<0.10	0.52	0.42	0.68
Zinc	0.34	0.64	0.70	0.64
Vanadium	<0.02	<0.02	<0.02	0.056
Copper	0.11	0.20	0.18	0.18
Caustic Post Test				
Tin	<0.10	<0.10	0.50	0.52
Zinc	0.26	<0.05	0.52	1.40
Vanadium	<0.02	<0.02	<0.02	0.054
Copper	<0.05	<0.05	0.17	0.28
Process Water Pre Test				
Tin	<0.10	<0.10	<0.10	<0.10

TABLE 2-2

METAL ANALYSES OF PROCESS SAMPLES AND FUEL OIL
(mg/L)

	TR1	TR2	TR3	TR4
NON-TCLP METALS FOUND IN QUANTIFIABLE CONCENTRATIONS (cont'd)				
Process Water Post Test				
Tin	<0.10	<0.10	1.43	<0.10
Fuel Oil Pre Test				
Zinc	<0.05	0.15	<0.05	<0.05
Fuel Oil Post Test				
Zinc	0.087	0.054	<0.05	0.051

TABLE 2-3

SYSTEM PERFORMANCE FOR METALS

	Test Run			
	1	2	3	4
Metals	Concentration[a], μg/dscm			
Arsenic	ND[b]	ND	19	ND
Selenium	ND	ND	7.2	ND
Chromium	0.1	ND	2.2	1.6
Lead	ND	ND	45	3.7
Tin	ND	ND	9.3	ND
Phosphorus	8.8	22	67	76
Zinc	21	225	34	34
Boron	15	24	130	116
Manganese	8.9	47	67	238
Copper	ND	ND	5.0	ND
Mercury	ND	ND	6.4	2.3
Vanadium	ND	ND	ND	9.4

[a]Values blank corrected based on field blanks.
[b]ND = Not detected, detection limits listed below.

Run 1: 3.1 μg/dscm for Arsenic, Selenium, Lead and Copper
6.3 μg/dscm for Barium and Tin
1.3 μg/dscm for Mercury and Vanadium

Run 2: 6.7 μg/dscm for Barium and Tin
3.4 μg/dscm for Arsenic, Selenium, Lead and Copper
1.4 μg/dscm for Mercury and Vanadium
2.1 μg/dscm for Chromium .

Run 3: 3.4 μg/dscm for Lead
1.4 μg/dscm for Vanadium

Run 4: 3.2 μg/dscm for Selenium and Copper
6.4 μg/dscm for Barium and Tin

TABLE 2-4

METAL ANALYSES RESULTS OF SLAG
(mg/L)

Metals	Concentration	Regulatory Limit
Arsenic*	0.13	5.0
Selenium*	<0.10	1.0
Cadmium*	<0.02	1.0
Chromium*	98.3	5.0
Lead*	<0.05	5.0
Nickel	0.09	NA
Tin	<0.10	NA
Thallium	<0.01	NA
Antimony	1.24	NA
Zinc	0.07	NA
Cobalt	<0.05	NA
Barium*	<0.10	100.0
Vanadium	0.12	NA
Beryllium	<0.02	NA
Copper	<0.02	NA
Silver*	<0.05	5.0
Mercury*	<0.0005	0.2

* TCLP metals
NA = No applicable regulatory limit

TABLE 2-5

SEMIVOLATILE PRODUCTS OF INCOMPLETE COMBUSTION

	Test Run			
	1	2	3	4
Substances	Concentration[a], μg/dscm			
Benzyl alcohol	4.5	274	160	12
3-Methylphenol	51	ND[b]	ND	ND
Benzoic acid	ND	ND	10	9.2
Dimethyl phthalate	8.1	8.5	3.9	115
Bis(2-ethylhexyl)phthalate	74	ND	ND	ND

[a]Values corrected using blank train results.
[b]ND = Not detected. Detection limits:

Test Run 1	2.2 μg/dscm for Benzoic acid
Test Runs 2 and 3	2.1 μg/dscm for 3-Methylphenol, Bis(2-ethylhexyl)phthalate and Benzoic acid
Test Run 4	1.9 μg/dscm for Bis(2-ethylhexyl)phthalate and 3-Methylphenol

TABLE 2-6

VOLATILE PRODUCTS OF INCOMPLETE COMBUSTION

	Test Run			
	1	2	3	4
Substances[a]	Concentration, μg/dscm			
Chloromethane	35	41	4.8	44
Vinyl Chloride	2.1	ND[b]	0.52	ND
Acetone	7.9	12	13	18
Carbon Disulfide	10	ND	ND	7.8
Methylene Chloride	20	28	22	18
2-Butanone	17	20	23	118
Chloroform	7.5	13	21	16
Carbon Tetrachloride	8.4	23	43	20
cis-1,3-Dichloropropene	0.71	ND	ND	0.22
Benzene	16	7.4	6.2	5.5
Toluene	6.1	2.6	6.2	4.3
Chlorobenzene	1.6	1.9	0.95	1.8
Styrene	3.3	3.5	3.5	237
o-Xylene	0.91	0.45	0.47	0.98
Bromoform	5.6	2.1	3.2	ND
trans-1,3-Dichloropropene	0.43	0.45	ND	ND
m & p Xylene	ND	0.22	0.63	1.5
1,1,1-Trichloroethane	ND	ND	ND	9.4
Ethylbenzene	ND	0.41	ND	0.84
Tetrachloroethene	ND	ND	ND	0.69

[a]Values blank corrected.
[b]ND = Not detected; detection limit is 0.2 μg/dscm for volatile organics.

TABLE 2-7

STACK GAS ANALYSIS FOR DIOXINS AND FURANS

		Test Run 1	2	3	4
Substances[a]		Concentration, ng/dscm			
PCDD/PCDF	TCDF	0.081	0.092	0.20	0.0071
	TCDD	0.0073	0.011	0.0068	ND[b]
	PeCDF	0.022	0.023	0.013	ND
	PeCDD	ND	ND	ND	ND
	HxCDF	0.026	ND	ND	0.073
	HxCDD	ND	ND	ND	ND
	HpCDF	ND	ND	0.53	0.14
	HpCDD	ND	ND	0.070	0.025
	OCDF	ND	ND	0.20	0.030
	OCDD	ND	ND	0.056	ND
Total		0.1363	0.126	1.0758	0.2751

[a]Corrected for blank train values.
[b]ND = Not detected. Detection limits:

TR 1: 0.021 ng/dscm for PeCDD, HxCDD, HpCDF and HpCDD
0.042 ng/dscm for OCDF and OCDD

TR 2: 0.021 ng/dscm for PeCDD, HxCDF, HxCDD, HpCDF and HpCDD
0.042 ng/dscm for OCDF and OCDD

TR 3: 0.021 ng/dscm for PeCDD, HxCDF and HxCDD

TR 4: 0.0037 ng/dscm for TCDD
0.019 ng/dscm for PeCDD, PeCDF and HxCDD
0.038 ng/dscm for OCDD

TABLE 2-8

ANIONS IN PROCESS LIQUID SAMPLES

	Concentration, mg/L											
	Test Run 1			Test Run 2			Test Run 3			Test Run 4		
	F^-	Cl^-	SO_4^{-2}	F^-	Cl^-	SO_4^{-2}	F^-	Cl^-	SO_4^{-2}	F^-	Cl^-	SO_4^{-2}
Scrubber Liquor Pre Test	ND[a]	1150	995	ND	957	1250	ND	908	1840	ND	1650	2110
Scrubber Liquor Post Test	ND	1310	2170	ND	1030	1660	ND	1050	2770	ND	2200	6010
Brine Pre Test	ND	59500	29000	ND	59100	21500	ND	38300	16500	ND	55400	16700
Brine Post Test	ND	55500	21800	ND	52500	18000	ND	62700	16900	ND	61700	20100
Caustic Pre Test	626	1900	ND	696	2320	ND	640	2070	ND	670	2210	ND
Caustic Post Test	578	1780	ND	638	2060	ND	633	2040	ND	644	2050	ND
Process Water Pre Test	ND	359	7.67	ND	373	6.35	ND	340	8.32	ND	356	10.3
Process Water Post Test	ND	364	10.1	ND	327	7.37	ND	335	8.65	ND	350	10.3
Fuel Oil Pre Test	ND	ND	ND	ND	ND	ND	ND	ND	ND	ND	ND	ND
Fuel Oil Post Test	ND	ND	ND	ND	ND	ND	ND	ND	ND	ND	ND	ND

[a]ND = Not detected. (Detection limits given in Table 2-10.)

TABLE 2-9

TOTAL HYDROCARBONS IN STACK GAS
(Expressed as Propane)

Test Run No.	Gas Phase Monitor (ppm)	Condensate (ppm)	Total (ppm)	Emission Rate (lb/hr)
1	3.0	0.02	3.02	0.144
2	2.5	0.41	2.91	0.133
3	2.0	0.64	2.64	0.119
4	2.5	0.35	2.85	0.113

3.0 FACILITY DESCRIPTION

3.1 THE JOHNSTON ATOLL CHEMICAL AGENT DISPOSAL SYSTEM (JACADS) FACILITY

The JACADS facility is located on Johnston Island, which is the largest of four largely man-made islands comprising the Johnston Atoll, located in the central Pacific Ocean. The nearest populated islands are the Hawaiian Islands which are more than 700 nautical miles to the northeast and the closest landfall is French Frigate Shoals which is about 400 miles north. Figure 3-1 shows the location of Johnston Atoll. Johnston Island, as shown in Figure 3-2, is roughly rectangular in shape and measures about two miles long and one-half mile wide.

Chemical agent munitions, including rockets, mines, projectiles, bombs and bulk agent ton containers are stored in bunkers located on the southwestern part of Johnston Island. This area, called the Red Hat Area, is under 24-hour electronic surveillance and armed security guard by the US Army.

The JACADS facility is situated immediately adjacent to the Red Hat Area minimizing the distance munitions are transported. Once inside the munitions demilitarization building (MDB) all normal munition handling is by conveyor and robotics, thereby reducing potential personnel exposure.

All systems and facilities are provided with a cascading ventilation system, which draws air inward from areas of lowest potential contamination to areas of greater potential contamination. All ventilation air is eventually used as combustion air for the furnace and/or exhausted through the PAS. Thus, atmospheric contamination is prevented.

The JACADS demilitarization process is based on the thermal destruction of toxic agents utilizing two-stage high temperature incinerators. The process consists of draining the liquid chemical agent from the storage/munition system followed by destruction of the agent, deactivation of explosives and thermal decontamination of the drained parts in the following incinerator systems:

1. The Deactivation Furnace System (DFS) processes drained rockets including the fiberglass shipping and firing (S/F) tubes, energetic materials such as propellant, fuses and bursters, and any residual agent.

2. The Liquid Incinerator System (LIC) processes liquid chemical agent drained from the storage/muni- tion system and Spent Decontamination Solution (SDS). The SDS results from cleanup operations to reduce the level of chemical agent present in an area or item.

3. The Metal Parts Furnace (MPF) processes drained metal ton containers, bombs and projectiles; and residual agent contained therein.

The JACADS facility also includes the Dunnage Incinerator (DUN) which processes the dunnage related to munition shipment such as cardboard and wooden boxes.

Flue gases from the DFS, the MPF, and the LIC are each scrubbed by a dedicated wet pollution abatement system (PAS). The DUN has a dry flue gas cleaning system. The scrubber liquid from the wet scrubbers is fed to dryers to reduce the brine to a dry salt.

3.2 LIC DESCRIPTION

The LIC is a refractory-lined, two chamber furnace designed to burn agents VX, GB and HD. It is also used to dispose of SDS. The principal components of the LIC system are: the primary chamber, the secondary chamber (afterburner) and the PAS. Figure 3-3 is a schematic diagram of the LIC primary and secondary chambers. Figure 3-4 is a schematic diagram of the LIC PAS.

The LIC primary chamber is fired and brought to its normal operating temperature of 2700°F using JP-5 fuel oil. After reaching normal operating temperature, the agent being processed is injected into the primary chamber. As the quantity of agent being injected increases, it replaces the oil as the primary fuel. The oil becomes a supplemental fuel, used only if needed to maintain the temperature.

Exhaust gas from the primary chamber passes to the secondary chamber, where it is heated to 2000°F before entering the PAS. SDS is introduced into the secondary chamber. The secondary chamber is fired with fuel oil.

Process parameters measured at the primary and secondary chambers are:

Fuel Oil Flow to Each Chamber
Combustion Air to Each Chamber
Agent Flow to Primary Chamber
Primary and Secondary Chamber Exhaust Temperatures
Primary Chamber Temperature
Oxygen in the Crossover Duct
Oxygen in the Secondary Chamber Exhaust Gas
SDS Flow to the Secondary Chamber
Carbon Monoxide in the Secondary Chamber Exhaust Gas

A general description of the PAS subsystems and their function is provided below:

a. The quench tower cools the exhaust gases before they enter the venturi scrubber. Alkali brine from the packed tower sump is sprayed into the quench tower to reduce the temperature of the flue gas. The operating parameters pertaining to the quench tower that are monitored are:

   Brine Flow Rate
   Inlet-Gas Temperature
   Outlet-Gas Temperature

b. The venturi scrubber is a variable-plug throat design to maintain a constant pressure drop of 5 to 50 in. w.c. Scrubber brine from the packed tower sump is injected into the top of the venturi. Brine droplets formed in the venturi collect particulate matter principally by collision. Neutral salts are formed when acid gases, such as HCl and SO_2, react with the caustic in the brine. The venturi scrubber is designed to remove 95% of all particles larger than 0.5 micron. The parameters monitored in the venturi are:

   Brine Flow Rate
   Pressure Drop

   The brine pH and the brine density are monitored at the scrubber sump pump discharge line.

c. The packed-bed scrubber tower is designed to provide at least 95% sulfur dioxide removal. The packed bed consists of stainless steel pall rings. Clear liquor is used to irrigate the packed-bed section of the tower, and acid-gas removal is effected in the packed bed by reaction of the acidic gases with caustic in the clear liquor. The scrubber operates at a pressure drop of 1 to 10 in. w.c. Sensors monitor the following packed-bed parameters:

   Liquor Flow Rate
   Liquor pH
   Liquor Density
   Pressure Drop

d. The mist eliminators remove liquid carryover from the packed bed. The pressure drop across the mist eliminators is continuously monitored.

e. The induced-draft fan moves the exhaust gases through the PAS. Dampers control the flow to maintain a pressure in the LIC that is lower than the pressure of the surrounding atmosphere, i.e., a negative-pressure condition or draft.

   Chemical agent concentration at the induced draft fan discharge is continuously monitored by an Automatic Continuous Air Monitoring System (ACAMS).

f. A 100-ft stack (common to DFS, LIC and MPF) serves to exhaust the clean gases to the atmosphere. This stack is of varying diameter due to its function as the end system for three of the four incinerators/kilns. This is the only PAS subsystem in the JACADS facility that is common to all three incinerators. The stack parameters that are monitored continuously are CO, O_2, NO_x, SO_2, and chemical-agent concentration, which is monitored by ACAMS/DAAMS (Depot Area Air Monitoring System).

3.3 FEED FOR THE DEMONSTRATION TEST BURN

Agent HD (mustard), drained from ton containers, was the primary hazardous waste feed to the LIC and is a 40CFR261 Appendix VIII compound. Thus, Agent HD was designated the principal organic hazardous constituent (POHC) for this test.

The chemical name for HD is 1,1' thiobis[2 chloroethane]. Its chemical formula is $C_4H_8Cl_2S$. Its molecular weight is 159.1 and its specific gravity is 1.27 (liquid) relative to water at 4°C and 5.5 (vapor) relative to air. It has a specific heat of 0.333 Btu/lb°F, a boiling point of 423°F, a flash point of 221°F and a heat of combustion of 8100 Btu/lb.

Because an adequate supply of SDS was not available during the government demonstration test burn, fresh decontamination solution was injected into the LIC secondary chamber.

3.4 SAMPLING LOCATIONS

A summary of the sampling locations and methods is given in Table 3-1. Sample point locations on the stack are shown in Figure 3-5.

The sampling location for the Modified Method 5 (MM5) was approximately 52 ft. above the ground. The sampling ports were located 13 ft. (1.81 stack diameters) downstream from a constriction in the stack and 19 ft. 5 in. (2.71 stack diameters) upstream from a constriction in the stack. The stack-sampling location for the Method 5 Acid Train (M5AT) and Multiple Metals Train (MMT) was 86 ft. above ground. The ports at this location were 13 ft. (2.90 stack diameters) downstream from a constriction in the stack and 14 ft. 1/2 in. (3.13 stack diameters) upstream from the outlet of the stack. Because of the close proximity of flow disturbances to the sampling levels, the sampling traverses were made with the maximum number of points (24) called for by the Environmental Protection Agency (EPA) methods. The actual locations of the points that were used are detailed in Tables 3-2 and 3-3.

3.5 FACILITY INSTRUMENTATION

The JACADS LIC facility includes several continuous emission monitors (CEMs) and a process data acquisition and recording (PDAR) system. Specifically, there are O_2 monitors at the exhaust of the primary chamber, at the exhaust of the secondary chamber, and at the LIC induced draft fan outlet. CO monitors are located at the secondary chamber exhaust and the LIC induced draft fan outlet. The CO concentrations at the secondary chamber exhaust are corrected to 7% oxygen and shown as such on the control room consoles and in the PDAR data. Sulfur dioxide and nitrogen oxides are also monitored on the stack. ACAMS units are located at the LIC induced draft fan outlet and at the stack to provide agent-concentration data and rapid warning of detectable agent in the flue gases. Table 3-4 provides a general summary of the CEM characteristics and specifications for the LIC.

Process data are logged by the PDAR system continuously throughout all operations of the JACADS facility. Data are taken at approximately 1-sec intervals and averaged over a time span of 4 min. For each averaging period, the minimum, maximum, and average value of each process variable is logged.

TABLE 3-1

LIC SAMPLING LOCATIONS

Site from Figure 3-5	Location on Figure 3-5	Matrix	Sampling Method
B	Stack Platform	Stack Exhaust	M5 Acid/Part Train M5 Metals Train
A	Common House	Stack Exhaust	ACAMS Modified M5 VOST CEM NO_x THC (25A) SO_2 Particle Size
2	LIC	Blower Duct Exhaust	CEM
4	LIC	Blower Duct Exhaust	CEM
Not in Figure	Crossover Duct	Exhaust	CEM
Not in Figure	Outlet of PAS Loop Pumps - LIC Valve 896	Scrubber Brine	Grab
Not in Figure	Tap in Feed Line - LIC Valve 312	Caustic	Grab
Not in Figure	Outlet of PAS Loop Pumps - LIC Valve 901	Scrubber Liquor	Grab
Not in Figure	Tap in Feed Line - LIC Valve 346	Process Water	Grab
Not in Figure	Fuel Oil Tank Valve 332	Fuel Oil Feed	Grab

TABLE 3-2

LOCATION OF SAMPLING POINTS FOR
METHOD 5 ACID TRAIN, MULTIPLE METALS TRAIN,
AND PARTICULATES

Point Number	Percent of Diameter from Wall	Distance from Wall, in.
1	2.1	1 1/8
2	6.7	3 5/8
3	11.8	6 3/8
4	17.7	9 9/16
5	25.0	13 1/2
6	35.6	19 3/16
7	64.4	34 11/16
8	75.0	40 3/8
9	82.3	44 5/16
10	88.2	47 1/2
11	93.3	50 1/4
12	97.9	52 3/4

The sampling ports are located 13 feet (2.90 stack diameters) downstream from a constriction in the stack and 14 feet 1/2 inch (3.13 stack diameters) upstream from the outlet of the stack. The locations of the sampling points were calculated as follows:

Port and Wall Thickness = 4 1/8 inches
Inside Stack Diameter = 53 7/8 inches

TABLE 3-3

LOCATION OF SAMPLING POINTS FOR
MM5 TRAIN AND PARTICLE SIZING

Point Number	Percent of Diameter from Wall	Distance from Wall, in.
1	2.1	1 13/16
2	6.7	5 3/4
3	11.8	10 3/16
4	17.7	15 1/4
5	25.0	21 9/16
6	35.6	30 11/16
7	64.4	55 7/16
8	75.0	64 9/16
9	82.3	70 7/8
10	88.2	75 15/16
11	93.3	80 3/8
12	97.9	84 5/16

The sampling ports are located 13 feet (1.81 stack diameters) downstream from a constriction in the stack and 19 feet 5 inches (2.71 stack diameters) upstream from a constriction in the stack. The locations of the sampling points were calculated as follows:

Port and Wall Thickness = 8 13/16 inches
Inside Stack Diameter = 86 1/8 inches

TABLE 3-4

FACILITIES EMISSIONS MONITORING INSTRUMENTATION

Parameter	Model & Type of Instrument	Sampling Location	Design Range	Operating Range	Accuracy	Precision
Oxygen	Thermox Model LS Electrochemical Analyzer	Exhaust Stack Primary Outlet Afterburner Exhaust	0 to 25% Oxygen in Exhaust Gases	0 to 25% Oxygen in Exhaust Gases	0.1%	0.5%
Carbon Monoxide	Anarad Model AR-50R NDIR	Exhaust Stack Afterburner Exhaust	0 to 500 ppm in Exhaust Gases	0 to 500 ppm in Exhaust Gases	±1% of full scale	±1% of full scale
HD	ACAMS Gas Chromatography	Exhaust Stack Blower Duct Discharge Air Lock	0 to 0.3 mg/m^3	to ASC (0.03 mg/m^3)	±25%	±25%
NO_x	Teco Model 44 Chemiluminescent	Exhaust Stack	0 to 500 ppm	0 to 500 ppm	±1%	±1%
SO_2	Western Research Model 721AT2	Exhaust Stack	0 to 500 ppm in Exhaust Gases	0 to 500 ppm	±0.5%	±0.5%

L1CHD3.W51

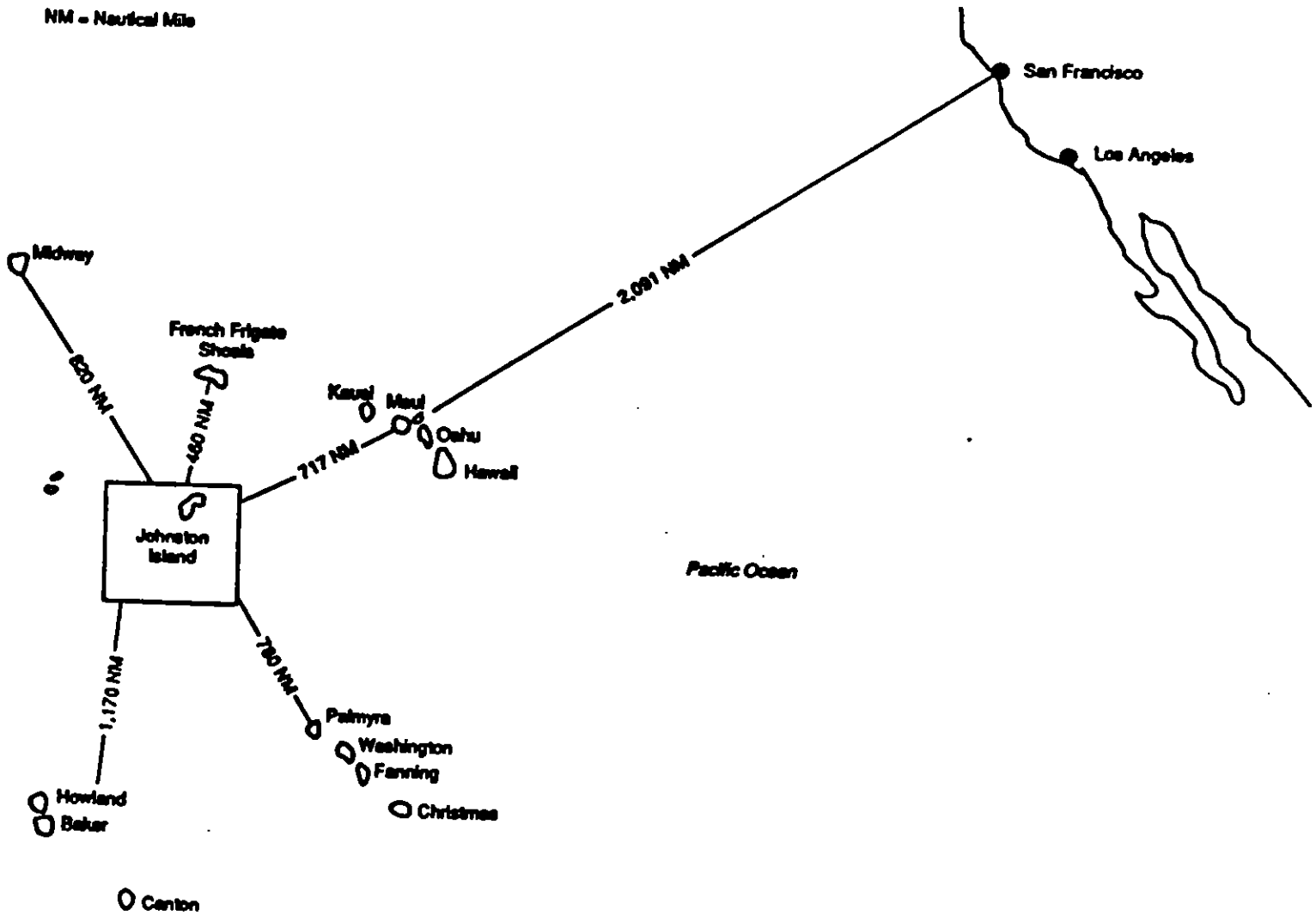

FIGURE 3-1. LOCATION OF JOHNSTON ISLAND

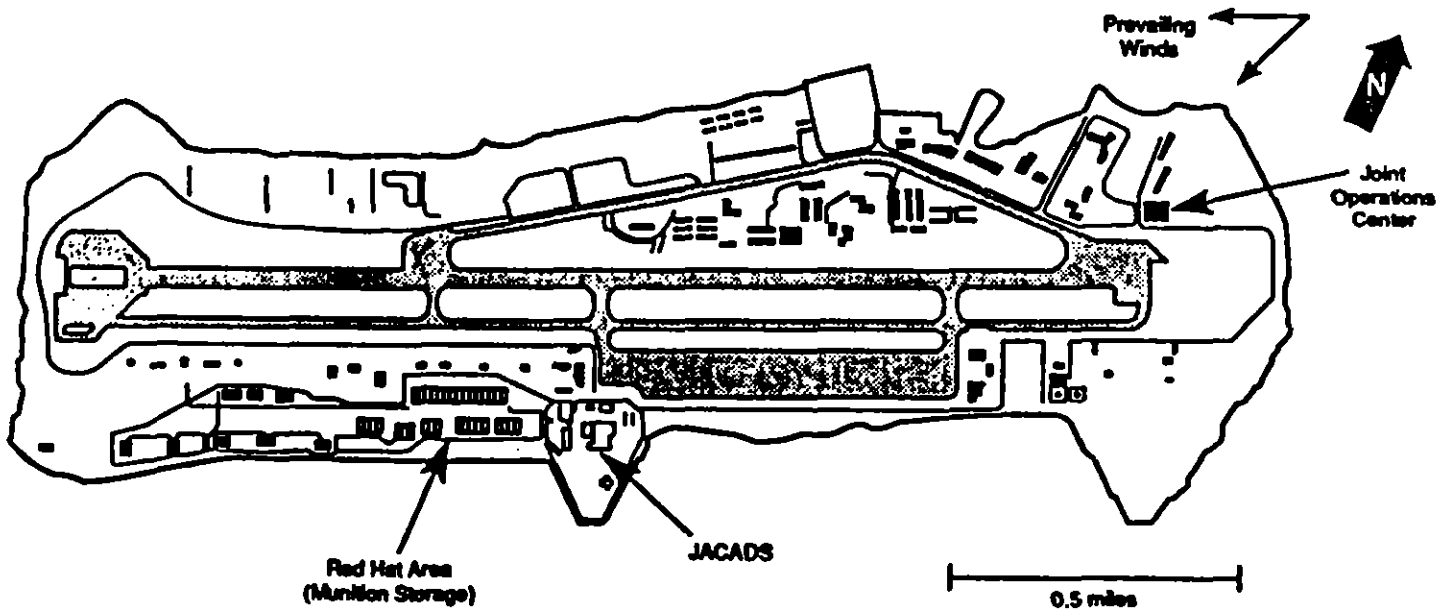

FIGURE 3-2. JOHNSTON ISLAND

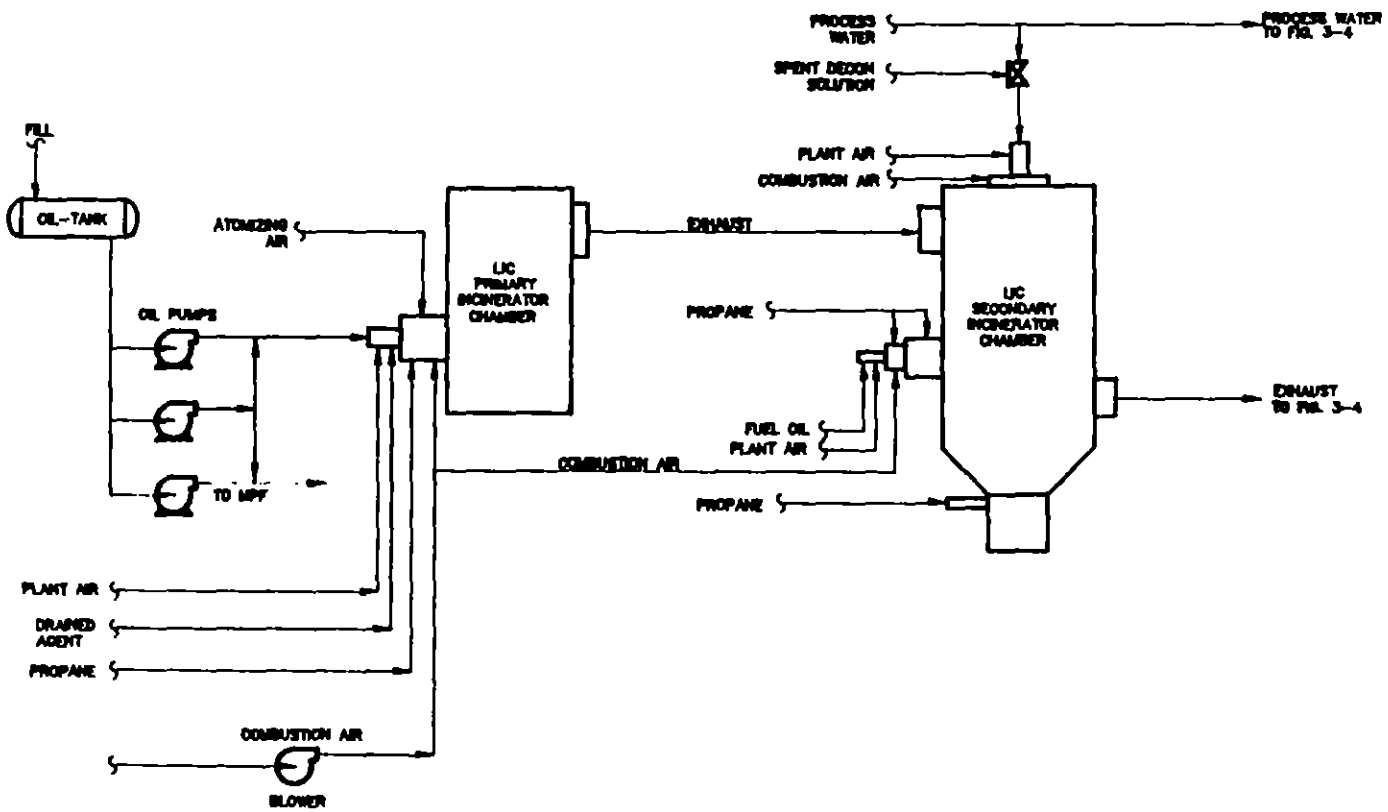

FIG. 3-3 – LIC DIAGRAM

FIG. 3–4 – LIC PAS DIAGRAM

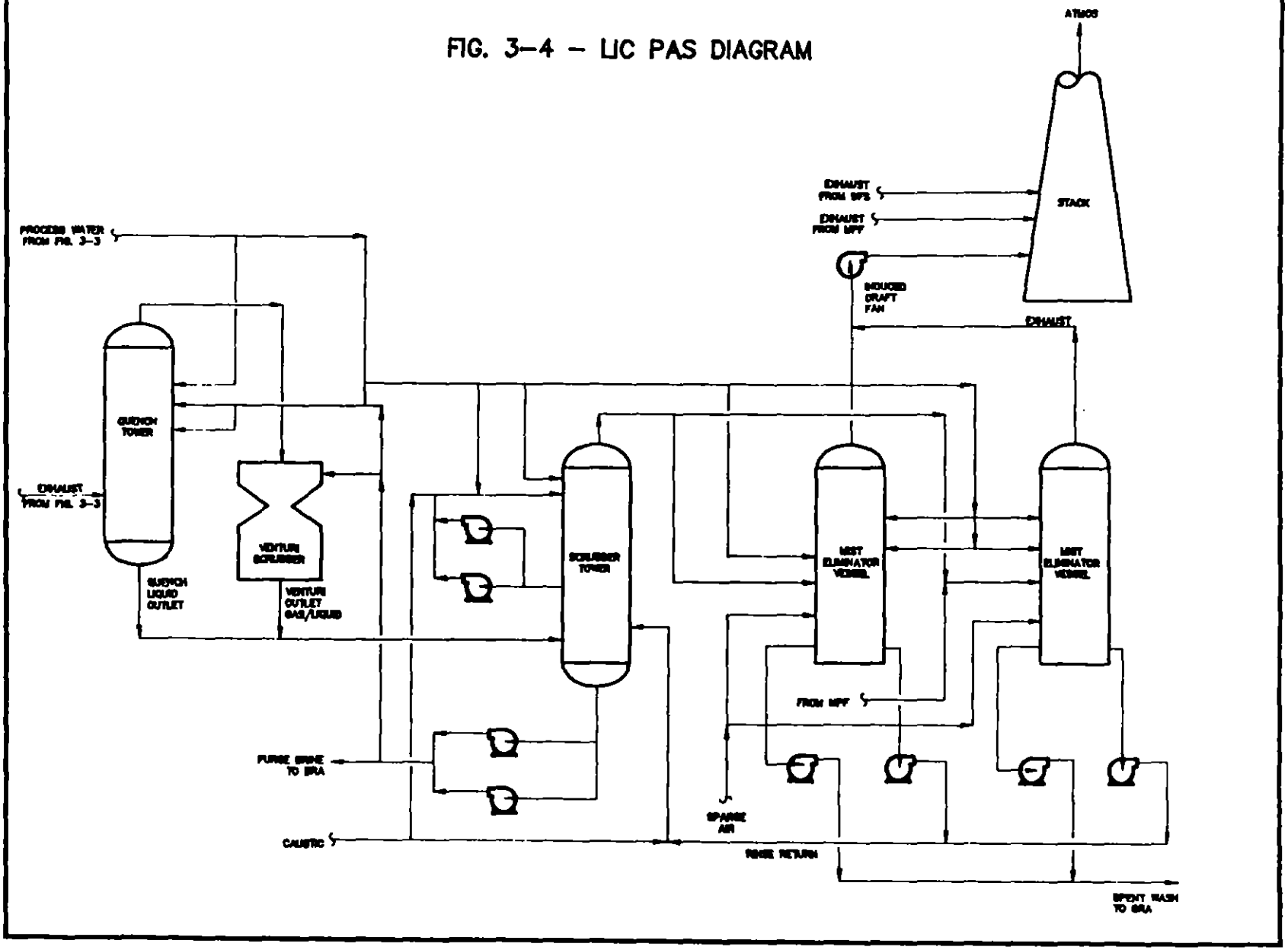

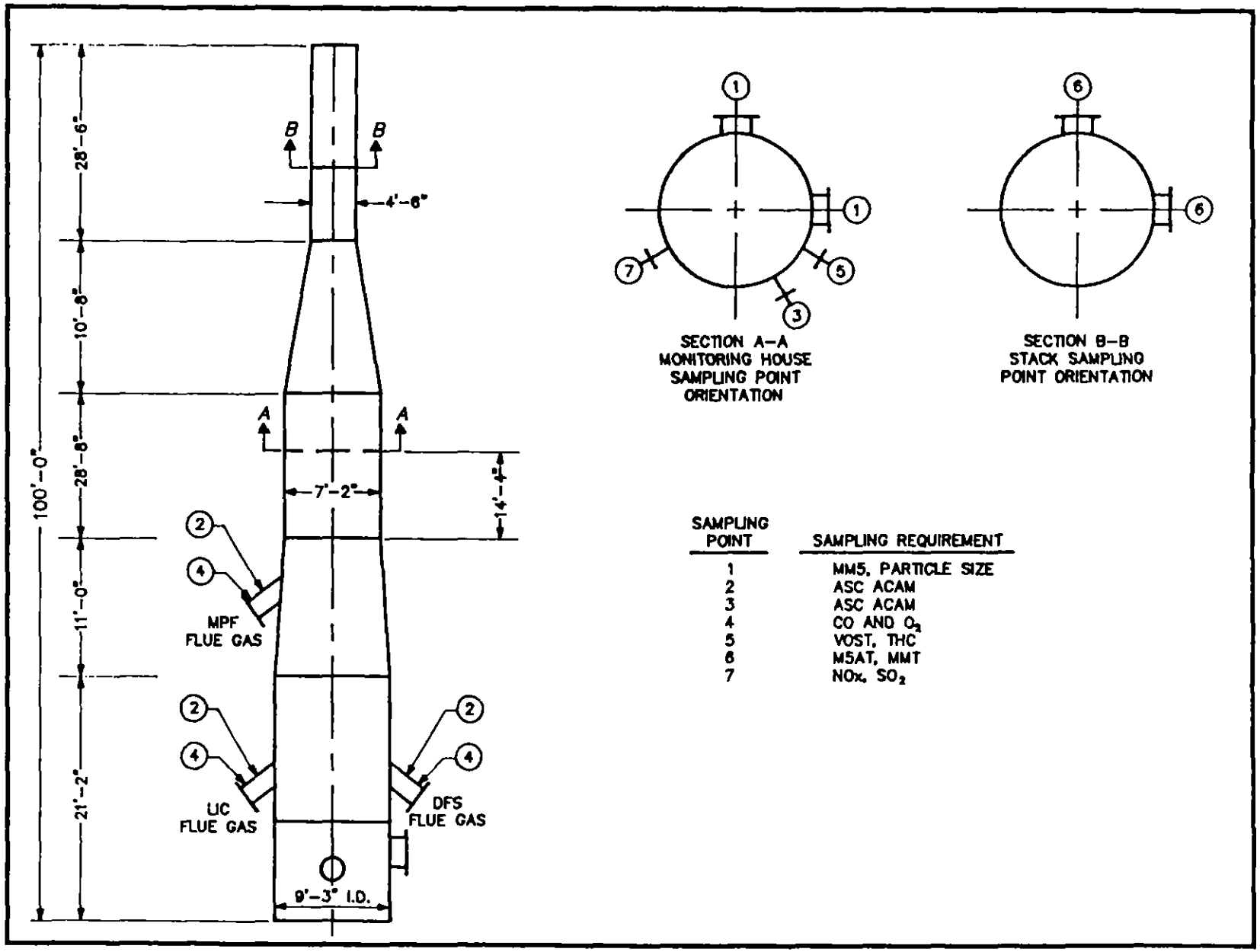

SAMPLING POINT	SAMPLING REQUIREMENT
1	MM5, PARTICLE SIZE
2	ASC ACAM
3	ASC ACAM
4	CO AND O_2
5	VOST, THC
6	M5AT, MMT
7	NOx, SO_2

FIG. 3-5 MPF, DFS, AND LIC STACK SAMPLE POINT LOCATIONS

4.0 TEST PROCEDURES

4.1 PREPARATION FOR TESTING

All equipment and instrumentation was calibrated as required and was rendered operational prior to the start of the test. The sample feed consisted of Agent HD drained from ton containers during the Metal Parts Furnace (MPF) Trial Burn. Decontamination solution was fed into the secondary chamber. The agent-feed rate to the Liquid Incinerator System (LIC) during these tests ranged from 848 to 1325 lb/hr.

The incinerator and pollution abatement system (PAS) operating criteria were as follows:

LIC Primary Chamber Temperature	2700 ± 150 °F
LIC Secondary Chamber Temperature	2000 ± 150 °F
Carbon Monoxide (corrected to 7% O_2)	≤100 ppm hourly avg.
Carbon Monoxide (corrected to 7% O_2)	200 ppm peak (5 minutes)
Venturi Delta P	5 - 50 in. H_2O
Packed Bed Scrubber	
Scrubber Liquid Flow	≥395 gpm
Packed-bed Delta P	1 - 10 in. H_2O
Scrubber pH	≥7

4.2 CONTINUOUS COLLECTION METHODS

4.2.1 Continuous Emission Monitors (CEMs)

CEMs are used at Johnston Atoll Chemical Agent Disposal System (JACADS) to determine O_2, NO_x, SO_2 and CO. The monitors are checked for drift and span every 24 hr. The daily checks are included in Appendix E.

4.2.2 Chemical Agent Monitors

The Automatic Continuous Air Monitoring System (ACAMS) was used to monitor for HD in stack gases. The ACAMS is capable of providing near-real-time monitoring for trace quantities of military chemical agents. Essentially, the ACAMS is a gas chromatograph (GC) that has been equipped with a solid-sorbent sample-collection device and with the circuitry, hardware, and software to permit it to collect and analyze samples automatically. The ACAMS is equipped with a fused-silica GC column, a flame-photometric detector (FPD), a sampling pump, and a small tube packed with a solid-sorbent material. ACAMS units used for stack sampling are interfaced with stack-sampling devices that enable them to sample chemically hostile stack gases. Three ACAMS were used to monitor the stack. These are located at the blower (one) and the exhaust (two, one operating with the other as a standby system). The ACAMS operates in cycles of fixed duration that contain predetermined periods for the collection and the analysis of samples. Functions such as the flow rates of operating gases and the column oven temperatures are also predetermined and controlled by appropriate software. However, the rate at which samples can be collected is manually controlled.

The ACAMS was calibrated and challenged by injecting known amounts of HD into the sampling system and allowing the instrument to complete its sampling/analysis cycle. Instrument responses are displayed on a Gas Plasma Display (GPD) screen

on the front of the instrument, on a strip-chart recorder that is part of the ACAMS unit, and in the JACADS control room.

The ACAMS units are calibrated at a minimum of every 30 days or if they fail two consecutive challenges. The instrument is calibrated to the allowable stack concentration (ASC) (0.03 mg/m^3) and set to alarm at 0.7 ASC. An additional calibration challenge to the ASC and to the Limit of Quantification (LOQ) is performed every 4 hours during operation. Set-points are recalibrated if necessary. ACAMS calibration and challenge data for the MPF trial burn are included in Appendix E.

4.3 MANUAL SAMPLE COLLECTION METHODS

Sampling was performed according to the "Sampling and Analytical Protocol for the Resource Conservation and Recovery Act (RCRA) Trial Burns and the Toxic Substance Control Act (TSCA) Demonstration Test Burn at JACADS" (included as Appendix G). Standard methods were used to collect the samples. A brief description of the methodology that was employed and the samples that were generated is presented within this section.

4.3.1 Modified Method Five (MM5)

Method 0010 from SW-846 was used to collect samples for determinations of semivolatile products of incomplete combustion (PICs) and dioxins/furans. All train glassware was cleaned with a 1:1 solution of methanol/methylene chloride prior to use. The sample was collected for four hours during the test run. During recovery of samples, all glassware prior to the solid sorbent was rinsed first with toluene, then with methanol/ methylene chloride to generate two separate rinse samples. The filter, sorbent, and condensate were then collected, resulting in a total of five fractions for analysis.

4.3.2 Volatile Organic Sampling Train (VOST)

Method 0030 from SW-846 was used to collect samples for volatile organic compound analysis. All of the sorbent tubes and the condensate samples were recovered from the VOST system for laboratory analysis. Several sorbent tubes were included as blank samples for each of the four runs. Each run provided four pairs of stack-sample sorbent tubes, each pair representing approximately 20 L of stack gas. The method employed the slow VOST which runs at 0.5 L/min. No samples were taken during the port changes. Two pairs were collected for 40 minutes each during the first two hours of the test run and two pairs were collected similarly during the last two hours of the test run.

4.3.3 Method Five Acid Train (M5AT)

Method 0050 of SW-846 was used in the collection of samples for the determination of acid gases and particulates. The sample was collected during the first two hours of the test run. Recovery of the probe wash, filter, 2 acidic and 2 caustic impingers generated six samples for analysis.

4.3.4 Multiple Metals Train (MMT)

Collection of samples for the determination of metal analytes and particulates was carried out with a Method 5 train equipped with additional impingers containing appropriate scrubbing solutions. A 72 minute sample was collected

during the last two hours of the test run. The resulting nine train fractions were submitted to the laboratory for analysis.

4.3.5 Particle Size Distribution

Particle size distribution measurements were made on the particulate matter in the stack gas with the use of University of Washington (Pilat) Mark V/III cascade impactors. The impactors were fitted with Southern Research Institute (SRI)/Environmental Protection Agency (EPA) Right-Angle Precollectors and were operated in situ. The impactor was configured for these tests to provide data in seven size fractions, with stage cut sizes ranging from about 0.4 to about 12 μm. A single particle size sample was obtained over all four of the LIC tests because of the very low particulate concentration in the stack gas. A six point traverse of the stack was made during each test using the same set of collection media each time. The particulate material that was collected was determined gravimetrically. All weighing of the impactor stage and filter catches was done on-site using a Cahn electronic microbalance to a sensitivity of 10 μg.

4.3.6 Orsat

Manual Orsat (EPA Method 3) was used to quantify CO_2 and O_2 for molecular-weight determinations.

4.3.7 Support Methods

EPA Methods 1, 2, 3 and 4 were used for determination of traverse points, velocity profiles, and moisture content as required in all isokinetic sampling efforts. Appendix F details the application of these methods.

4.3.8 Total Hydrocarbons (THC)

The average THC, reported as propane, was measured by EPA Method 25A.

4.4 SAMPLE COLLECTION SEQUENCE AND PROCEDURE

4.4.1 Demonstration Test Burn Sequence

The sequence of events in carrying out the sampling was as follows:

On Monday, August 17, the equipment was prepared for testing on the LIC Stack for the first LIC HD test run. Testing was delayed due to unit operational problems. At 1310 the test was canceled and the trains were recovered as blanks. A meeting was held with EPA to discuss schedule, test plan, duties, etc.

On Tuesday, August 18, a test of the MPF was conducted.

On Wednesday, August 19, the first LIC test run was conducted. Pre test samples around the PAS were taken at 0745. At 0810 a PAS pH problem resulted in a shutdown of the furnace and as a consequence a new set of PAS samples was taken at 0930. At 1000 the first LIC test run was begun. A delay in the start of sampling with the metals train because of leak check problems made that train run about 30 minutes beyond the end of sampling for the other trains. The port change for the M5AT occurred at 1101, the port change for the MM5 occurred at 1200, the MMT began at 1337 and had a part change at 1413. The test was successfully concluded at 1453. Recovery of the train was completed at 1640 and

the samples were removed from the test site and stowed in the secure storage building at 1715 completing all work for the day.

On Thursday, August 20, testing of the MPF was carried out for the first MPF HD test run.

On Friday, August 21, the total hydrocarbons monitor was calibrated and the equipment was prepared for testing. Testing was delayed due to unit operational problems. An EPA VOST audit was performed. The second LIC test run began at 1825 and continued until a feed stoppage took place at 2055. Sampling recommenced at 2204 and continued without further difficulty with the test being completed at 2353. The port change for the M5AT occurred at 1925, the port change for the MM5 occurred at 2025, the MMT began at 2205 and had a port change at 2243. Sample recovery and storage were complete at 0130 on 8/22.

On Saturday, August 22 the third LIC test run started at 1350. The test proceeded without interruption until completion at 1801. The port change for the M5AT occurred at 1450, the port change for the MM5 occurred at 1550, the MMT began at 1629 and had a port change at 1704. Sample recovery was completed at 1915 and sample storage was completed at 1945.

On Sunday, August 23, two MPF tests were carried out. In addition, samples were packed for shipment on the MAC flight scheduled for Monday, 8/24.

No LIC testing was conducted on Monday, 8/24.

On Tuesday, August 25, the fourth test run began at 1309. Sampling was halted at 1541 because of a plant problem and resumed at 1651. The test run was successfully completed at 1812. Sample recovery and storage were completed at 2030.

4.4.2 Sample Collection Procedure

Samples of 5-min duration for the particulate matter and for HCl were taken isokinetically at each traverse point with an EPA-type heated, glass-lined probe (M5AT). Samples of 3-min duration for the particulate matter and for heavy metals were also taken isokinetically at each traverse point with an EPA-type heated, glass-lined probe (MMT). Finally, semivolatile samples of 10-min duration were taken isokinetically at each traverse point with an EPA-type heated, glass-lined probe (MM5).

Each sampling train was leak-checked at the nozzle (at 15 in. of mercury vacuum) before each test, during port change, during component change, and again leak-checked at the nozzle after each test at the highest vacuum reading recorded during the test. A leak criterion of "not greater than 0.1 inch of mercury in 2 minutes" was used. Pretest leaks were corrected prior to the start of sampling. The lines were also checked for clearance, and the console manometer was zeroed before each test run. The pitot-tube lines were checked for leaks before and after each test run. The method was modified to preclude the collection of moisture in the pitots. After each pressure reading, a three-way valve was utilized to clean moisture from the pitot tubes.

In summary, most stack sampling was conducted simultaneously. The M5AT sampling process concluded somewhat before the midpoint of the overall test period, and the MMT sampling process started at the beginning of the third hour of sampling.

The samples that were collected for analysis included those needed for determining:

a. Particulate concentration in the stack gas: two samples per test run (M5AT and MMT).

b. HCl concentration in the stack gas: one sample per test run (M5AT).

c. Selected metals in stack emissions in the stack gas: one sample per test run (MMT).

d. Volatile and semivolatile organic emissions in the stack gas (MM5 and VOST).

e. CO_2 and O_2 in the stack gas (Orsat - four one-hour integrated samples).

f. Particle size sampling in the stack gas: one sample over the entire course of the four test runs.

The following were monitored:

a. NO_x in the stack gas.

b. CO and O_2 at the secondary chamber exhaust and stack gas.

c. Total hydrocarbons in the stack gas.

d. SO_2 in the stack gas.

e. O_2 in the Primary Chamber exhaust gas.

f. Agent (HD) in the stack.

In addition, the following media were sampled:

a. PAS brine sampled at beginning and end of each test run from LIC Valve 896 (Valves 782 and 897 were closed prior to sampling).

b. Caustic makeup sampled at beginning and end of each test run from LIC Valve 312.

c. Process feed water sampled at the beginning and end of each test run from LIC Valve 346.

d. Fuel oil from Valve 332 on the tank.

e. Scrubber liquor sampled at the beginning and end of each test run from LIC Valve 901 (Valves 785, 786 and 900 were closed prior to sampling).

These five sample valves are shown on Figures 4-1 and 4-2.

Prior to being shipped off site, all samples were tested by the JACADS laboratory and certified to contain less than the drinking water standard for agent.

4.4.3 Sampling Contingency Plan

The following contingency plans were adopted and used in these test runs:

Upset conditions in the incinerator, such as the loss of a key monitor, an agent alarm, or any non-steady-state incinerator condition, will result in a feed stoppage. Sampling operations will be affected by the upset condition as defined below:

Upset of 30 or less minutes	Stop trains in stack
Upset greater than 30 minutes	Remove and cap trains
Upset greater than 2 hours	Stop test run
Cumulative feed stop of 2 hours	Stop test run unless otherwise directed by EPA

Leak checks must be performed when trains are removed from the stack; if leaks are found, the test run must be terminated.

4.5 ANALYSIS

The procedures that were used for preparing and analyzing samples are described briefly in this section. The test plan in Appendix G also describes the analytical methods. The methods were based on standard EPA procedures, which are referenced below according to method number. Any deviations from the standard methods are documented with supporting quality assurance/quality control (QA/QC) results.

4.6 ANALYSIS SUMMARIES

4.6.1 Semivolatile Organics Analysis

4.6.1.1 Extractions

The XAD-2 sorbent cartridges for the MM5 were prepared according to SW-846 Method 0010. The sorbent cartridges were spiked with 1,2-dichlorophenol-d_3, 1,2,4-trichlorobenzene-d_3 and 2,3,7,8-tetrachlorodibenzo-p-dioxin-$^{37}Cl_4$ prior to shipment to the field.

MM5 samples were extracted from the sorbent cartridges according to SW-846 Method 3540. The XAD-2 sorbent cartridges and filters were spiked with polychlorinated dibenzo-p-dioxins and polychlorinated dibenzo furans (PCDD/F) isotope-dilution standards, which consisted of the following fourteen $^{13}C_{12}$-labeled compounds: 2,3,7,8-TCDF, 1,2,3,7,8-PeCDF, 2,3,4,7,8-PeCDF, 1,2,3,4,7,8-HxCDF, 1,2,3,6,7,8-HxCDF, 1,2,3,7,8,9-HxCDF, 1,2,3,4,6,7,8-HpCDF, 1,2,3,4,7,8,9-HpCDF, 2,3,7,8-TCDD, 1,2,3,7,8-PeCDD, 1,2,3,4,7,8-HxCDD, 1,2,3,6,7,8-HxCDD, 1,2,3,4,6,7,8-HpCDD, and OCDD. In addition, the base-neutral-acid surrogates, which consisted of phenol-d_6, 2-fluorophenol, nitrobenzene-d_5, 2-fluorobiphenyl, 2,4,6-tribromophenol, and terphenyl-d_{14}, were also added. The substances of interest that were collected in all sorbent and filter samples were Soxhlet-extracted, and liquid-impinger samples were subjected to liquid-liquid extraction by SW-846 Method 3510. The filter and front wash from each train were combined and the resin and back half of each train were combined to make two separate samples from each MM5 train. Each of the resulting samples was concentrated to 10 mL, of which 1 mL was allotted for the determination of semivolatile organics and 9 mL for determination of PCDD/F.

Aqueous samples (PAS brine, caustic makeup, feed water) were treated for extraction by the liquid-liquid extraction method given in SW-846 Method 3520. That is, about 500 mL of each sample was placed in a continuous liquid-liquid extractor, pH-adjusted to greater than 11 (if necessary), and spiked with the chlorinated organic surrogates and with the PCDD/F isotope-dilution standards. The sample was then treated by extraction with methylene chloride for 18 to 24 hr. The methylene chloride was removed, the pH of the sample adjusted to less than 2, and the sample again subjected to extraction for an additional 18 to 24 hr with another 500 mL of methylene chloride. Each of the resulting samples was concentrated to 10 mL and split to allow the analysis of semivolatile organics on 1 mL of the sample and PCDD/Fs on 9 mL of sample.

Samples for PCDD/F analysis were cleaned up according to Method 8290. No further cleanup was performed on the portion of the sample reserved for the determination of semivolatile organics. The PCDD/F extract was partitioned against 20% aqueous KOH, 5% aqueous NaCl, several portions of concentrated H_2SO_4, and 5% aqueous NaCl (in that order). The extract was spiked with the clean-up standard ($^{37}Cl_4$-2,3,7,8-TCDD), unless the extract was from XAD-2 cartridge which had been spiked with this compound before being shipped to the field. The sample was evaporated to 2 mL and eluted through an alumina column (Woelm Super 1). The fraction obtained from the 8% methylene chloride/hexane eluent was found to contain the components of interest, and this fraction was used for further cleanup and analysis. All samples were also cleaned up with an AX-21 carbon column. The toluene fraction was reduced to 1 mL and spiked with isotopically labeled internal standard $^{13}C_{12}$ compounds: 1,2,3,4-TCDD and 1,2,3,7,8,9-HxCDD. The toluene fraction was reduced to 20 μL and the solvent exchanged with nonane before the sample was subjected to analysis by High Resolution Gas Chromatography/High Resolution Mass Spectometry (HRGC/HRMS).

The fuel-oil samples for PCDD/F analyses were prepared by weighing 2 g of each sample into a 10-mL volumetric flask, adding the PCDD/F isotope-dilution standards, diluting the sample to 25 mL with hexane and cleaning the sample by the above method. The fuel-oil samples for semivolatile organic analysis were prepared by diluting 10 μL fuel oil to 10 mL with methylene chloride.

4.6.1.2 Analytical Procedures for Determining Semivolatile Organics

4.6.1.2.1 Polychlorinated Dibenzo-p-dioxins and Polychlorinated Dibenzofurans

Samples designated for PCDD/F analyses were analyzed by HRGC/HRMS according to EPA Method 8290.

The samples were also analyzed for total TCDFs, total TCDDs, total PeCDFs, total PeCDDs, total HxCDFs, total HxCDDs, total HpCDFs, and total HpCDDs. SW-846 Method No. 8290 was used except that 14 (instead of 9) isotopically labeled internal standards, 2 isotopically labeled recovery standards, and 1 isotopically labeled cleanup standard were used.

Five-point calibration curves were generated for the components. The calibration curves for 2,3,7,8-TCDF and 2,3,7,8-TCDD covered the range from 0.02 to 4 ng; the curves for the 2,3,7,8-PeCDFs, 2,3,7,8-PeCDDs, 2,3,7,8- HxCDFs, 2,3,7,8-HxCDDs, 2,3,7,8-HpCDFs, and 2,3,7,8-HpCDDs extended from 0.10 to 20 ng; and the curves for OCDF and OCDD extended from 0.2 to 40 ng in 20 μL of solution.

The GC/mass spectometry (MS) analysis conditions are given below:

Instrument:	VG 70S GC/MS equipped with HP 5890 GC
Column:	J&W DB-5, 60 m x 0.32-mm ID, 0.25-μm film
Column Temp:	100°C hold 2 min, then ramp to 180°C at 20°C/min, hold 1 min, then ramp to 220°C at 5°C/min, hold 14 min, then ramp to 300°C at 5°C/min, hold 8 min
Carrier Flow:	He at 1.5 mL/min
Injector Temp:	275°C
Interface Temp:	215°C
Injection Volume:	2 μL
Data System:	VG 11/250J

4.6.1.2.2 Base-Neutral-Acid Analysis

The MM5 samples, as well as the process liquid, toxicity characteristic leachate procedure (TCLP) refractory salt and fuel oil samples, were analyzed for base-neutral-acid compounds by Method 8270. Compounds that were analyzed included the target list from the test plan as well as nontarget compounds that were present at high levels. The spectra are retained in the files. The fuel-oil samples were diluted before analysis because of the high levels of semivolatile compounds that occurred naturally in the fuel oil and that interfered with the analysis. Internal standards were added immediately before analysis by GC/MS. The GC/MS conditions are given below:

Instrument:	HP 5971 GC/MS equipped with HP 5890 GC
Column:	HP-5, 60 m x 0.32-mm ID, 0.25-μm film
Column Temp:	45°C hold 3 min, then ramp to 300°C at 8°C/min, then hold
Carrier flow:	He at 1 mL/min
Injector Temp:	270°C
Interface Temp:	280°C
Injection Volume:	1 μL
Data System:	HP DOS

4.6.2 Volatile Organics Analysis

Stack gases were analyzed for volatile organic analysis (VOAs) by SW-846 Methods 5040 and 8260 with the 8240 compound list. Thus, the analyses were based on VOST sampling and GC/MS analysis. Aqueous process samples were analyzed for VOAs by SW846 Method 8260 with the 8240 list. Compounds that were analyzed included the target list from the test plan as well as nontarget compounds that were present

at high levels. Internal standards and surrogates were added to all samples immediately prior to analysis by GC/MS. The spectra are retained in the files.

The GC/MS conditions are given below:

Purge and Trap:	Tekmar LSC-2, Trap OV-1/Tenax/Silica Gel/Charcoal
Purge:	11 min
Desorb Temperature:	200°C
Desorb Time:	4 min
GC:	HP 5890 Series II
Column:	30 m x 0.53 mm ID, 3.0 μm, DB624
Program:	46°C hold 5 min, then ramp to 140°C at 6°C/min
MS:	HP 5971 MSD
Scan:	35 to 260 amu at 4 sec/scan
Source Temperature:	200°C
Interface:	Jet separator, 250°C

4.6.3 Anions Analysis

The M5AT samples were analyzed for chloride and fluoride, whereas the process samples were analyzed for chloride, fluoride, and phosphate.

The ion-chromatography conditions are listed below:

Instrument:	Dionex DX-100 with conductivity detection
Column:	Ion Pac AS-4A
Eluent:	0.75 mM sodium bicarbonate/2.0 mM sodium carbonate
Flow Rate:	2.0 mL/min
Injection Volume:	100 μL

4.6.4 Metals Analysis

The MMT and TCLP metals other than mercury were determined by inductively coupled plasma atomic-emission spectrometry (ICP) according to SW-846 Method No. 6010. These analyses were performed on a Perkin-Elmer Plasma 40 or Plasma 400 Emission Spectrometer. Samples were prepared for analysis as set forth in SW-846 Method No. 3010, which involves acid digestion. The ICP wavelengths that were used are listed below.

Metal	Wavelength, nm
Arsenic	193.696
Selenium	196.026
Chromium	205.552
Antimony	206.833
Zinc	213.856
Cadmium	214.438
Phosphorus	214.914
Lead	220.353
Nickel	231.604
Barium	233.527
Boron	249.773
Manganese	257.610
Vanadium	292.402
Beryllium	313.042
Silver	328.068
Thallium	276.8
Tin	189.980
Cobalt	230.786
Copper	324.754

Mercury was determined in TCLP and MMT samples by cold-vapor atomic-absorption spectrometry at 253.7 nm (SW-846 Method No. 7470) with an Instrumentation Laboratory Model IL551 AA/AE Spectrometer equipped with a Model 440 Atomic Vapor assembly. Thallium was analyzed by graphite furnace atomic absorption spectrometry at 276.8 nm (SW-846 Method No. 7841) with a Perkin-Elmer Model 3100 Spectrometer.

4.6.5 pH Measurements

The pH levels of the liquid-process samples were measured prior to the analyses of these samples for other parameters. The pH values were determined by combination glass electrode (with internal reference electrode) according to SW-846 Method 9040.

4.6.6 Particulates

Particulates were quantified in the acetone-probe rinse and in the filters from the MMT and the acid train. These samples were dried to a constant weight in a desiccator and weighed with an analytical balance to ±0.1 mg.

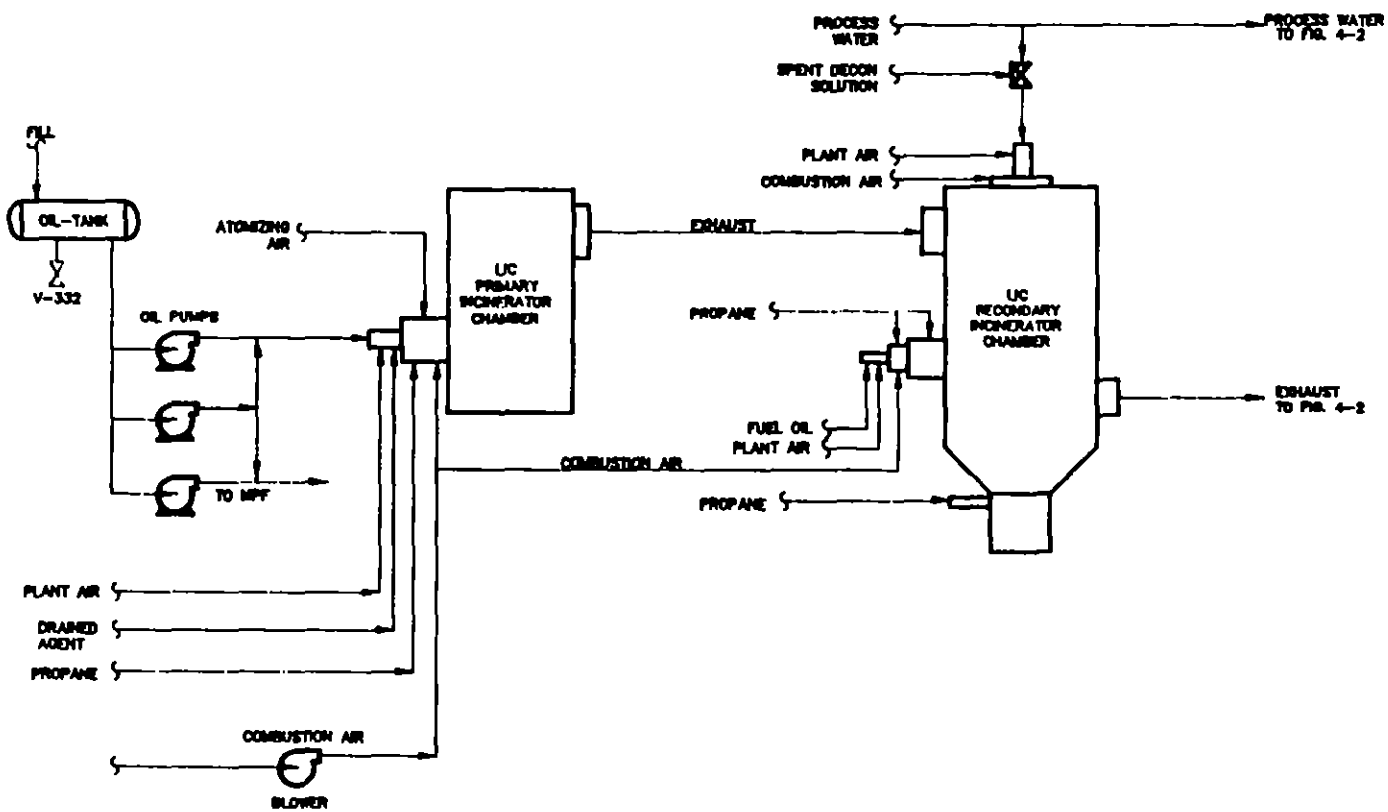

FIG. 4-1 – LIC SAMPLE LOCATIONS

FIG. 4-2 – LIC PAS SAMPLE LOCATIONS

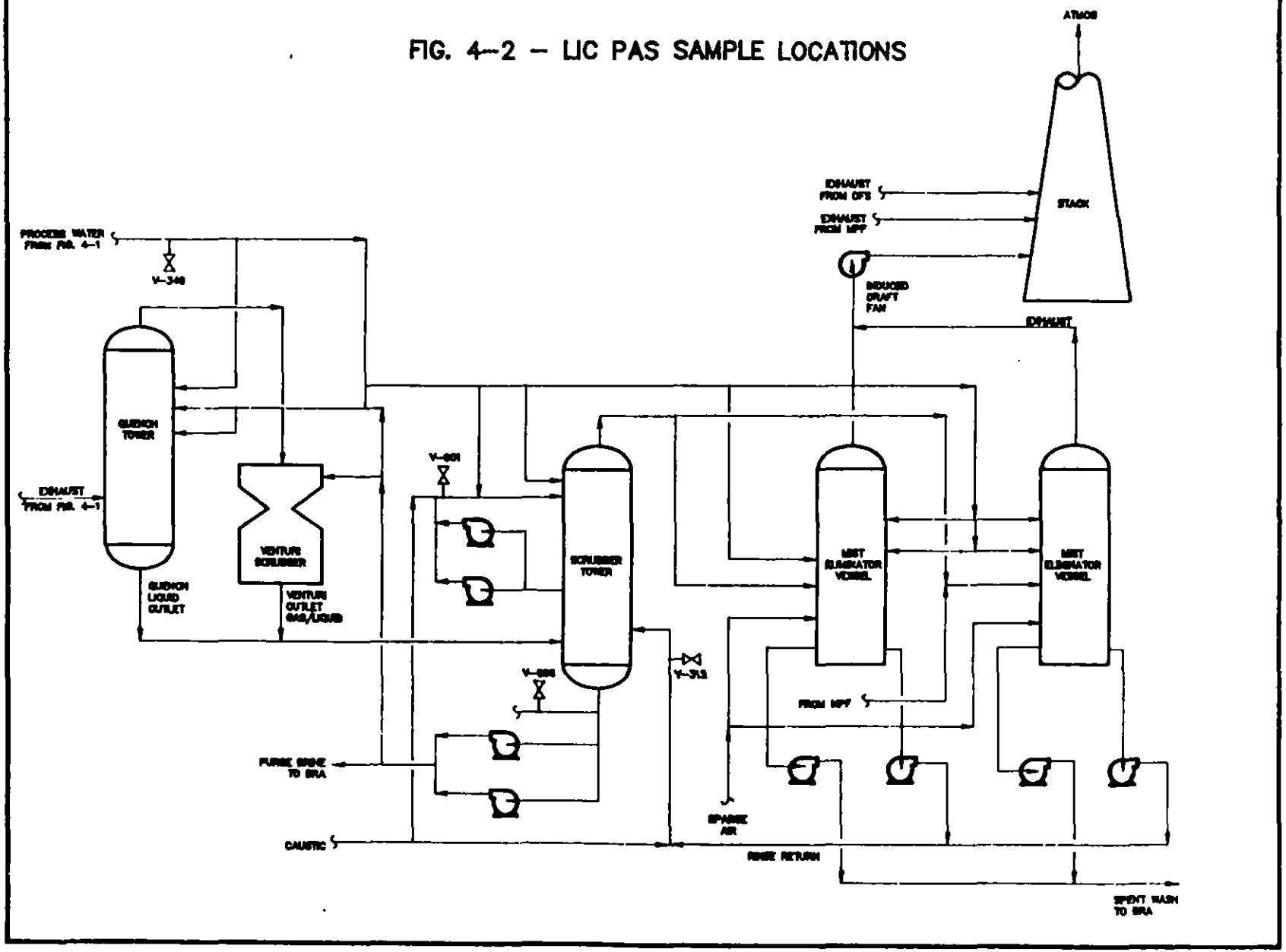

5.0 TEST RESULTS

5.1 INTRODUCTION

The test results for the LIC HD Demonstration Test Burn describe the LIC process characteristics, the primary chamber and secondary chamber operating characteristics and parameters, the nature of the stack emissions and the chemical content of the solid residue. These results allow calculation of RCRA mandated parameters such as DRE for the POHC, HD concentrations in the stack, particulate emissions, HCl emissions, CO concentrations in the stack and the concentration of certain metals in the process liquids. Additionally, data are available from the monitoring of stack emissions for O_2, CO_2, PICs, PCDD/F and metals. Additional data are available from the analysis of process samples (process water, scrubber liquor, scrubber brine and caustic) for PICs, PCDD/F, F^-, Cl^-, PO_4^{-3} and SO_4^{-2}.

5.2 PROCESS DATA

5.2.1 Process Data Acquisition and Recording

Process conditions for the four test runs are summarized in Tables 5-1 and 5-2. The data were compiled from PDAR System records and manual stack sampling logs. The data indicate that the required temperature conditions, as specified in the RCRA permit application, were maintained throughout the runs.

The CO concentration data in the PDAR log were not the raw measurements but were, instead, the values obtained after correction of the measurements to a 7% oxygen concentration. CO was found to range from 0.0 to a one minute peak of 273 ppm. The average ranged from 14.4 to 18.5 ppm. These values are well below the required limits of 100 ppm for the hourly rolling average and 200 ppm peak for five minutes. Figures 5-1 through 5-4 show how the O_2 and CO concentrations, gas temperatures and agent feed rate varied during Test Run 1. These are presented as examples only. Complete data for all four test runs are included in Appendix C.

5.2.2 Orsat

Hourly Orsat data are presented in Table 5-3. Nitrogen concentration was not part of the Orsat data, but was obtained by difference.

5.2.3 Chemical Agent Feed Rate

The average rate of chemical agent feed to the LIC, during the demonstration test burn, ranged from 849 to 1320 lb/hr. Table 5-4 provides the maximum, minimum and average rates for each of the four test runs.

In addition, decontamination solution (DS) was fed to the secondary chamber at 2.98 to 3.71 gallons per minute. Maximum, minimum and average decontamination solution feed rates are also provided in Table 5-4.

Applicable operating (permit) limitations are 1330 lb/hr for HD and 2000 lb/hr (approximately 3.65 gpm) for DS. Because of variations in DS density, an agreement was reached with the EPA allowing the DS to be measured in gallons per minute. When measuring DS flow in gpm, short term excursions to 110% of the limit are permitted.

5.3 RESULTS FROM THE DETERMINATION OF SEMIVOLATILE ORGANICS

5.3.1 General

Operating conditions for the MM5 train are given in Table 5-5.

MM5 samples, process liquid samples, and fuel oil samples were analyzed for semivolatile organic compounds by SW-846 Method 8270. Compounds which were analyzed included the target list from the Sampling and Analysis Plan (Appendix G) as well as non-target compounds which were present at levels above their detection limits. Fuel oil samples were diluted and analyzed without extraction. The dilution was necessary to reduce the extremely high background associated with undiluted samples of this matrix. The mass spectra are retained in SRI files, and all analyses were performed by GCMS. Internal standards were added to all samples immediately prior to analysis by GCMS.

Samples were prepared as described in Method 0010. The MM5 trains were spiked with three acid surrogate compounds and three neutral surrogate compounds for the semivolatile analyses prior to extraction. After extraction the samples were split such that one-tenth of the sample was taken for semivolatile organics analysis and the remaining nine-tenths for PCDD/F analysis. Semivolatile internal standards were added immediately prior to analysis. All compounds and spikes were quantified against the internal standards.

5.3.2 Results

Table 5-6 lists the system performance for semivolatile products of incomplete combustion for the LIC. Units are μg/dscm of stack exhaust. Benzyl alcohol and dimethyl phthalate were found in samples from all of the test runs. 3-Methylphenol and Bis(2-ethylhexyl) phthalate were found during Test Run 1 only. Except for dimethylphthalate, all were also present in the laboratory blanks.

Table 5-7 shows the total mass collected for each sample. Many of the non-target compounds found in the MM5 samples were also present in the lab blanks.

Table 5-8 gives a list of tentatively identified compounds and their estimated value found in the MM5 blanks and samples. Tentative identification was done using the National Bureau of Standards (NBS) 49,000 compound library.

As shown in Table 5-9, no semivolatile compounds were found in the slag TCLP leachate.

The results from the analyses of aqueous process samples, and fuel oil samples for semivolatile organic compounds, are given in Tables 5-10 through 5-13. For aqueous process samples and fuel oil samples the results are reported as concentrations in μg/L. The compounds found were all phthalates: Bis(2-ethylhexyl)phthalate, Diethylphthalate and Di-n-octyl phthalate. These are all common industrial and laboratory contaminants. They are also present in the lab blanks. Spectra and estimated amounts of the tentatively identified non-target compounds for the process samples are given in Appendix J.

5.3.3 Sample Calculations

5.3.3.1 Aqueous Process Samples (Bis(2-ethylhexyl)phthalate in caustic)

$$\frac{2(\text{Area of component detected})(\text{Mass of internal standard})}{(\text{Area of internal standard})\ (\text{Resp. factor})(\text{Sample volume})} =$$

$$\frac{2(9188514)(40\ \mu g)}{(1192318)(1.542)(0.5\ L)} = 800\ \mu g/L$$

(The factor of 2 is necessary because the final analytical sample is a composite of two equal volumes of acidic and basic extracts.)

5.3.3.2 MM5 Trains (For Benzyl Alcohol)

$$\frac{(\text{Area of component detected})(\text{Mass of internal standard})}{(\text{Area of internal standard})(\text{Resp. factor})} =$$

$$\frac{(7545155)(40\ \mu g)}{(261027)(0.738)} = 1567\ \mu g$$

5.4 DIOXINS and FURANS (PCDD/F)

5.4.1 Results

Table 5-14 lists the system performance results for dioxins and furans. Units are µg/dscm of stack exhaust, with correction for the blank train results applied.

Total TCDDs, TCDFs, PeCDFs, PeCDDs, HxCDFs, HxCDDs, HpCDFs, HpCDDS, OCDF, and OCDD were estimated by using an average response factor for each group and by summing the estimated quantities of the compounds that meet the retention-time requirements and isotopic-abundance requirements of Method 8290. Appendix H gives data sheets for the PCDD/PCDF analytes.

Table 5-15 summarizes the total PCDD/PCDF results for the stack gas, and Table 5-16 gives the results of the analyses for target PCDD/PCDF components. Some PCDDs and PCDFs were detected. The low surrogate recoveries for Test Run 1 (Table 5-16) may have affected the detection limits for this sample. These recoveries would cause the detection limit to be 3 to 11 times higher than with higher recoveries. All of the PCDD/Fs, that were detected were found in the back half of the train and thus would be associated with gaseous material and not particulates. (The front half of a sample train collects particulate and the back half collects gas phase analytes.) Additionally, the levels of PCDD/F when converted to toxicity equivalent (TE) (see description below) yielded less than 1 ng of 2,3,7,8-TCDD-equivalent dioxins present in any sample. The TE in stack gas would be much less than 1 ng/dscm. This is comparable to other tests at JACADS.

The samples of process liquids (water, liquor, brine, and caustic) and fuel oil were analyzed for PCDD/PCDF. Tables 5-17, 5-18, 5-19, 5-20, and 5-21 give the

results of these analyses. Few PCDDs/PCDFs were detected and concentrations were generally just above the detection limit. Some PCDDs/PCDFs were also detected in lab blanks. The PCDDs/PCDFs are probably due to low-level laboratory contamination. However, the fuel oil sample from Test Run 4 Pretest contained significantly greater quantities of PCDD/F. Because the sample contained only the target analytes, it is suspected to be contamination from a matrix spike sample.

Table 5-22 gives the results of the analyses for target PCDD/PCDF components and Table 5-23 summarizes the total PCDD/PCDF results for a sample of slag from the LIC. Low levels of hexa and hepta furans were detected in the slag sample, but at about the same level found in the blank.

The 2,3,7,8-TCDD TE values for MM5 trains and slag sample are presented in Tables 5-16 and 5-22 respectively. TE is the amount or concentration of 2,3,7,8-TCDD that yields the same toxicity as the mixture of PCDD/PCDFs that were found in the samples. The TE can be calculated as:

TE = 1.00 [2,3,7,8-TCDD]+0.10 [2,3,7,8-TCDF]+0.5 ([1,2,3,7,8-PeCDD]+[2,3,4,7,8-PeCDF])+0.05 [1,2,3,7,8-PeCDF]+0.1 ([1,2,3,4,7,8-HxCDD]+[1,2,3,6,7,8-HxCDD]+[1,2,3,7,8,9-HxCDD]+[1,2,3,4,7,8-HxCDF]+[1,2,3,7,8,9-HxCDF]+[1,2,3,6,7,8-HxCDF]+[2,3,4,6,7,8-HxCDF])+0.01 ([1,2,3,4,6,7,8-HpCDD]+[1,2,3,4,6,7,8-HpCDF]+[1,2,3,4,7,8,9-HpCDF])+0.001 ([OCDD]+[OCDF])

The factors used to calculate TE were taken from "Update of Toxicity Equivalency Factors (TEFs) for Estimating Risks Associated with Exposures to Mixtures of Chlorinated Dibenzo-p-Dioxins and Dibenzofurans (CDDs/CDFs)," March 1989, (EPA 625/3-89/16). Guidance from EPA indicates that only actual values, and not detection limits, should be used in a TE calculation.

5.4.2 Example Calculation

Example calculations are shown below:

MM5 Train (PCDD/PCDF)
1,2,3,4,6,7,8-HpCDF (SRI Sample No. V05387)
Target Analyte

$$\text{Amount (HpCDF)} = \frac{\text{Area (HpCDF)}}{\text{Area (Internal Standard)}} \cdot \frac{\text{Amount (Internal Standard)}}{\text{RRF}}$$

$$= \frac{798}{2450} \cdot \frac{2\text{ ng}}{2.488}$$

$$= 0.262\text{ ng}$$

MM5 Train (PCDD/PCDFs)
Total HpCDF (SRI Sample No. V05387)

$$\text{Amount (HpCDFs)} = \frac{\text{Area (HpCDFs)}}{\text{Area (Internal Standards)}} \cdot \frac{\text{Amount (Internal Standards)}}{\text{RRF}}$$

$$= \frac{1240}{3740} \cdot \frac{4\ ng}{2.059} = 0.644\ ng$$

5.5 VOLATILE ORGANICS ANALYSES

5.5.1 Results

Table 5-24 provides the system performance for volatile products of incomplete combustion for the LIC. Units are μg/dscm of stack exhaust, with blank correction applied.

The results from the analyses of VOST samples and aqueous process samples for volatile organic compounds are given in Tables 5-25 through 5-29. For VOST tubes and condensates the results are given in total mass collected while for aqueous process samples the results are reported as concentrations in μg/L.

Eight of the target volatile compounds, chloromethane, methylene chloride, 2-butanone, chloroform, carbon tetrachloride, benzene, toluene and styrene, were found in all of the VOST tubes. Some of the VOST tubes also contained acetone, carbon disulfide, chlorobenzene, bromoform and xylene (o, m and p). A few of the VOST tubes contained cis-1,3-dichloropropene, trans-1,3-dichloropropene, vinyl chloride and ethylbenzene. Many of the volatile compounds found are common laboratory and industrial contaminants, such as acetone, carbon disulfide, methylene chloride, 2-butanone, benzene, toluene, carbon tetrachloride and chloroform. Methylene chloride was present in all of the blank tubes, the condensate blank from Test Run 1 and the condensate samples from Test Runs 1 and 2. Carbon disulfide was found in blanks for Test Runs 2 and 3. Test Run 4 blank contained acetone and styrene. For VOST tubes and condensates the results are given in total mass collected while for aqueous process samples the results are reported as concentrations in μg/L.

All of the process water samples contained low levels of bromoform. 2-butanone was present in all of the caustic samples, and some of the brine samples. Low levels of acetone were found in most of the caustic samples. Test Run 1 process water pretest and Test Run 4 brine post test samples contained low levels of methylene chloride.

Nontarget compounds present at levels above their detection limits were tentatively identified (NBS 49,000 compound library). Spectra and estimated amounts of the tentatively identified compounds are presented in Appendix I.

5.5.2 Sample Calculations

5.5.2.1 Aqueous Process Samples (TR 4 Process Water Pre Test for bromoform)

$$\frac{\text{(Area of component detected)(Concentration of internal standard)}}{\text{(Area of internal standard) (Resp. factor from 5-pt calibration)}} =$$

$$\frac{(24867)(50\ \mu g/L)}{(331915)(0.302)} = 12.4\ \mu g/L$$

5.5.2.2 VOST Tubes (TR 4 Pair 3 Tenax for Benzene)

$$\frac{\text{(Area of component detected)(Mass of internal standard)}}{\text{(Area if internal standard)(Resp. factor from 3-pt calibration)}} =$$

$$\frac{(323551)(250\ \text{ng})}{(611389)(1.220)} = 108\ \text{ng}$$

5.6 ANIONS ANALYSIS

5.6.1 Chlorides in Stack Gas

Chloride was measured in the stack gas to determine the levels of Cl_2 and HCl in the LIC emissions. The required samples were collected with an M5AT. Details of the operating parameters for the M5AT are presented in Table 5-30 and indicate that the sampling was valid.

Sample preparation consisted of taking a sample volume for field verification. Impinger 2 and impinger 3 from each run were composited as one sample. This procedure was repeated for impinger 4 and impinger 5. Then 2 mL of each sample was injected into a Dionex DX-100 ion chromatograph. To keep peaks within the proper range, dilutions of the samples were made as needed. Using the PE Nelson Access*Chrom data system, values for the above mentioned anions were obtained in mg/L. These results were then used to calculate acid levels using the formulae contained in SW-846 Method No. 9057.

Tables 5-31 through 5-34 give the results of the analyses of the M5AT for HCl and Cl_2. By using both H_2SO_4 and NaOH impingers, the M5AT differentiates between HCl and Cl_2 in the stack emissions.

No chlorine was detected in the stack gas (detection limit, 0.21 μg/mL) during any of the four test runs. No HCl was detected in the stack gas (detection limit, <0.003 lb/hr) in three of the four tests. A measurable emission rate of 0.0165 lb/hr was found in one test. The allowable limit for HCl emission is 4 lb/hr. Thus the HCl emission rate for each test run was less than 1/2 of 1% of the limit. Complete tabulations of reduced data and calculations of concentrations for the trains are provided in Appendix L.

5.6.2 Anions in Liquid Process Samples

The anions chloride, fluoride, phosphate, and sulfate were determined in the fuel oil and process liquid samples. Preparation of fuel oils consisted of evaporating 10 mL of the sample to dryness using a hot plate. 10 mL of deionized water was then added to the sample residue. The water/residue combination was then filtered and run on the ion chromatograph. Aqueous process liquid samples were diluted as necessary to provide the correct range response from the instrument.

Analysis of these samples and data reduction were performed as specified in Section 5.6.1 by the PE Nelson Access*Chrom data system with results reported as mg/L.

As expected, no phosphate was detected in any of the samples since Agent HD is not a phosphorous containing compound.

The highest concentrations of chloride and sulfate were found in the scrubber brine. This was expected, and indicates that the scrubber is effectively removing these contaminents from the gas stream. In two of the four test runs, the pretest concentrations were slightly higher than the post test concentrations.

Tables 5-35 through 5-38 provide these results. Table 5-39 gives the detection limits for each anion in each of the process liquids.

5.7 METALS ANALYSIS

Samples intended for the determination of metals were collected from the stack emissions with an MMT. Table 5-40 indicates the operating parameters for this train. Particulate matter was also collected with the MMT, and the results of particle-concentration measurements are also detailed in the table.

The system performance for metals is given in Table 5-41.

The results for the MMT are given in Tables 5-42 through 5-45. These results show that thirteen of the twenty metals screened were found in one or more of the samples. In some cases, these metals were also found in the blanks. The data are reported as front (particulate and filter components) and back (impingers). There are no regulatory limits for metal concentrations in these sample media. However, the concentrations of most metals were near or below the applicable method detection limits. Complete tabulations of reduced data and calculations of concentrations for the train samples are provided in Appendix M.

The results of the analyses of LIC process samples for metals are given in Table 5-46 through 5-49. No detectable concentration of beryllium, silver, antimony, cobalt or thallium was found in the liquid process samples.

Seven TCLP metals were detected in one or more of the process samples, but only chromium in Test Run 1 scrubber brine pretest was present in excess of 50% of the regulatory limit: Arsenic, barium, cadmium, chromium, lead, mercury and selenium were detected in the scrubber brines from all four test runs. Chromium and lead were found in scrubber liquor samples. Some caustic samples contained one or more of these metals. In general, the post test concentrations were not significantly different than the pretest concentrations.

Since there is no lead in Agent HD, it is speculated that the source may be lead-based paint or the metallic composition of the ton containers. Refractory in the LIC furnace is suspected to be the source of chromium found in the samples. Nickel and copper are known contaminants of Agent HD. The source of the other metals is uncertain, but it is suspected that they may be artifacts from previous operation of the LIC and/or contaminants in the Agent HD, introduced during manufacture or by degradation of the storage container (withdrawal tubes, welds). Even though no regulatory limit exists for the non-TCLP metals (tin, zinc, nickel and copper were detected in one or more samples), the concentrations found were low, with most being near their detection limits.

The results of the analyses of the LIC slag TCLP extracts are given in Table 5-50. The sample tested was a composite of the four test runs. No detectable concentration of Se, Cd, Pb, Sn, Tl, Co, Ba, Be, Cu, Ag, or Hg was found. The only TCLP metals found were arsenic and chromium. The concentration of arsenic was less than 3% of the regulatory limit. The concentration of chromium was nearly 20 times the regulatory limit. Since chromium is not a constituent of either the waste feed or the fuel, it is believed that its source is the refractory. No regulatory limit exists for the remaining metals (Ni, Sb, Zn, V); the quantities found were generally small, with most samples being near the detection limit.

Example Calculations are given below:

MMT Front Half:

The final volume for MMT front halves is 100 mL. If a sample gives an ICP result for Cu of 1.25 μg/mL, then total μg Cu = 1.25 μg/mL x 100 mL = 125 μg.

MMT Back Half:

Back half ICP results are corrected for the fraction removed for mercury analysis. If the total original sample volume is 600 mL, then 100 mL is removed for mercury analysis, and the remaining 500 mL is reduced to a final volume of 100 mL during digestion. If the ICP result for Cu is 1.24 μg/mL, then total Cu = 1.24 μg/mL x 100 mL x $\frac{600}{500}$ = 149 μg.

MMT Mercury:

Mercury results by cold vapor-AA are expressed as the weight (in μg) of mercury in the total original volume of the sample. All mercury standards are made up to 100 mL volume, and thus an aliquot of similar volume is taken from the actual sample. If a 100-mL aliquot is removed from a 600-mL sample and gives a result of 1.2 μg/L, then total μg Hg = 1.2 μg/L x 0.6 L = 0.72 μg Hg.

Matrix Spikes and Spike Duplicates:

Spike recoveries are calculated by:

$$\% \text{ Recovery} = \frac{\text{Conc. of spiked sample} - \text{Conc. of unspiked sample}}{\text{Spike conc. level}} \times 100\%$$

Process Samples:

Element concentrations in process samples are determined with the use of linear-regression analysis, which is normally performed by the ICP and printed in report format. Mercury linear-regression analyses were hand-calculated and are documented in SRI notebooks.

5.8 REACTIVITY AND pH ANALYSIS

The pH levels of the process samples were measured with a pH electrode, in the SRI laboratory. The caustic solution contained approximately 23% NaOH.

Therefore, the pH values for these samples were always at the upper limit of the meter (>13.5).

The reactivity of the scrubber liquids and slag was measured by Environmental Services Laboratory of Birmingham, AL. The method for cyanide was SW-846 Method 9010 and the method for sulfide was SW-846 Method 9030. No cyanide was found in any samples. The levels of sulfide detected are indicative of a reactive waste.

Table 5-51 shows the results of reactivity and pH analysis of liquid process samples.

5.9 PARTICULATE MEASUREMENTS

5.9.1 Mass Flow

Measurements of particle concentrations were made on samples from the MMT and M5AT. The acetone probe rinse and the filter from each run were dried to a constant weight before they were analyzed. The trains passed all required pre test and post test leak checks of the pitot tube and sampling system.

Particulate concentrations (corrected to 7% O_2) in the four LIC test runs were, respectively, 0.543, 5.06, 4.87 and 4.39 mg/dscm from the M5AT results and 2.28, 1.37, 0.84, and 1.13 mg/dscm from the MMT results. Hence, the LIC particulate emission levels were well below the RCRA particulate limit of 180 mg/dscm at an oxygen content of 7% in the stack. The corresponding measured particulate concentrations after correction of the data to 12% CO_2 (this is not a RCRA requirement but is required as an alternative manner of reporting particulate results by certain state agencies) were 0.645, 6.17, 6.22 and 5.59 mg/dscm from the M5AT and 2.86, 1.71, 1.06 and 1.39 mg/dscm from the MMT.

5.9.2 Particle Size Distribution

Only one particle-size distribution measurement was made. The weight gains in each stage of the impactor were checked after the first of the four test runs and, because of very low particulate concentrations, were found to be too low to be reliably measured. This meant that reliable weights for the several size fractions could be obtained only by continuing one sample through all four test runs. Consequently, the collection substrates were reloaded into the impactor, and a single sample was accumulated through all four test runs. Figure 5-5 shows the size distributions in a differential mass distribution format (dM/dLogD vs. Dia.). This format shows the concentration at each particle size versus size, with the area under the curve between two sizes equalling the total concentration over the size interval. Figure 5-6 shows the average distribution on a cumulative-percentage-by-mass-less-than-size basis. The overall mass median diameter of the particulate matter was approximately 0.3 μm. However, the distribution was distinctly bimodal, with about 70% of the particulate matter in a mode centered at approximately 0.3 μm and the remaining 30% in a mode centered at about 3 micrometers. Detailed results can be found in Appendix D.

Formulas and nomenclature for particulate concentrations and emission rates are given in Appendix D.

5.10 CHEMICAL AGENT - POHC

5.10.1 Results

The primary waste feed for this demonstration test burn was HD drained from ton containers, which were processed separately through the MPF. Agent HD is a 40CFR261 Appendix VIII compound and the designated POHC for this government demonstration burn. Feed rates for the four test runs were as shown in Table 5-4.

Despite redundant ACAMS, no agent was detected in the stack gas. The detection limits at the stack ACAMS station, at all times during the four test runs were, respectively, 0.0057, 0.0087, 0.0063 and 0.0063 mg/m^3. These detection limits are determined from the daily ACAMS challenge data, which can be found in Appendix E.

All process samples were certified by SwRI to contain less than 200 parts per billion (ppb) of HD.

5.10.2 Destruction and Removal Efficiency

Destruction and Removal Efficiency (DRE) is one of the three fundamental RCRA performance standards mandated for hazardous waste incinerators. All RCRA regulated hazardous waste incinerators must achieve at least 99.99% DRE for the POHC identified in the incinerator waste feed stream. Agent HD was used as the POHC for the LIC trial burn. DRE is a straight forward calculation using the following formula:

$$DRE = \frac{W_{(in)} - W_{(out)}}{W_{(in)}} \times 100\%$$

Where $W_{(in)}$ is the quantity of Agent HD in the hazardous waste fed into the system and $W_{(out)}$ is the emission rate of Agent HD measured in the stack gas prior to release to the atmosphere.

Agent HD is continuously monitored in the stack gases and is expressed as a concentration in the total exhaust stream (i.e., part per million). Other monitoring systems measure the total flow of exhaust gases. Based on these values, the Agent HD mass emission [$W_{(out)}$] in the stack gases for the trial run can be determined.

Stack concentrations of Agent HD were not detected during any of the four test runs. However, in order to be able to calculate the DRE, a valid means of quantifying an emission value must be employed. The LIC stack was monitored by ACAMS at both the stack house and in the blower duct. The sensitivity (Limit of Quantification) of the HD ACAMS monitoring system was approximately one fifth of the ASC (0.03 mg/m^3) for HD in all four test runs. Based on this level of capability, the actual level of HD that could have been detected was below 0.006 mg/m^3. Knowing that the system did not alarm during the test runs, the stack concentration must have always been below this value. Using the specific LOQ based emission rate as a maximum concentration value of HD in the stack gas, a relative hourly emission rate can be calculated based on the stack flow. Using Test Run #1 data:

HD maximum outlet concentration = <0.0057mg/m^3
Calculated stack flow = 14,033 acfm (Avg. of M5AT & MMT)
Average agent feed rate = 848.8 lb/hr

$$\text{Hourly emission} < \frac{.0057\ \text{mg}}{\text{m}^3} \times \frac{1\ \text{m}^3}{35.31\ \text{ft}^3} \times \frac{1\ \text{lb}}{454{,}000\ \text{mg}} \times \frac{14{,}033\ \text{ft}^3}{1\ \text{min}} \times \frac{60\ \text{min}}{\text{hr}}$$

Hourly emission < 0.000299 lb/hr

Using this hourly emission to calculate DRE:

$$\text{DRE} > \frac{848.8\ \text{lb/hr} - 0.000299\ \text{lb/hr}}{848.8\ \text{lb/hr}} \times 100\%$$

DRE > 99.999965

The same approach, using test run specific data, was used to calculate the DRE for each of the remaining three test runs. Results of the DRE determination are shown in Table 5-52. The DREs were all substantially greater than the RCRA requirement of 99.99%.

5.11 TOTAL HYDROCARBONS

Total hydrocarbons (THC) in the stack gas were determined by EPA Method 25A. The results are presented in Table 5-53.

This data was taken to characterize the emissions. It is not subject to any regulatory limits. Although there are no applicable statutory limits, the EPA has established a guidance limit of 20 ppm by volume (ppmv). The data shows that THC emissions from LIC were consistently 15%, or less, of this guidance limit.

Table 5-1

ID	Parameter	Test 1 Max	Test 1 Min	Test 1 Average	Test 2 Max	Test 2 Min	Test 2 Average	Test 3 Max	Test 3 Min	Test 3 Average	Test 4 Max	Test 4 Min	Test 4 Average
13-PIT-146	LIC Primary Atomizing Air Pressure (psi)	46.00	45.00	45.50	46.00	45.00	45.75	46.00	45.00	45.66	46.00	8.00	45.61
24-AIT-91	LIC Venturi Scrubber PH	11.90	8.30	10.25	11.20	8.80	10.82	11.20	7.70	9.79	11.10	8.10	9.79
13-TE-127	LIC-FURN-101 Exhaust Gas Temp (F)	2714.00	2707.00	2710.34	2725.00	2696.00	2710.52	2734.00	2673.00	2706.42	2726.00	2684.00	2710.30
13-TE-128	LIC-FURN-102 Exhaust Gas Temp (F)	2030.00	2019.00	2024.19	2019.00	1992.00	2007.50	2023.00	1994.00	2014.95	2018.00	1990.00	2001.98
24-AIT-116	Clean Liquor to Scrub Tower PH	9.50	8.30	8.88	8.60	7.90	8.29	9.00	8.10	8.46	10.70	8.40	9.21
13-PIT-150	LIC-FURN-101 Combustion Air Press (In. WC)	27.50	27.00	27.27	28.30	27.20	27.66	29.10	26.60	27.23	36.90	27.20	27.63
24-TIT-387	Quench Tower Outlet (F)	229.00	187.00	190.48	184.00	180.00	182.03	184.00	182.00	183.31	192.00	181.00	184.24
24-PDIT-111	Brine to Quench Tower 104 Filter (psi)	0.80	0.50	0.50	2.00	1.70	1.79	1.90	1.50	1.77	20.00	0.80	2.26
13-FIT-127	LIC-FURN-101 Agent (Lbs/hr)	975.00	931.00	954.54	1104.00	968.00	1024.60	1342.00	497.00	1264.46	1333.00	0.00	1315.18
13-TE-43	LIC-FURN-101 Exhaust Gas Temp (F)	2696.00	2693.00	2694.77	2709.00	2673.00	2695.73	2719.00	2658.00	2693.80	2712.00	2647.00	2695.09
13-TE-103	LIC-FURN-102 Temp (F)	2028.00	2017.00	2022.70	2017.00	1991.00	2008.14	2021.00	1992.00	2013.42	2014.00	1988.00	2000.42
13-PIT-52	LIC-FURN-101 Primary Chamber Pressure (In. WC	-1.20	-2.50	-2.00	-1.60	-3.10	-2.00	-1.30	-2.40	-1.93	-1.40	-2.80	-2.06
24-FIT-84	Brine to LIC Quench Tower (gpm)	46.00	44.00	45.00	74.00	72.00	72.56	74.00	70.00	71.91	88.00	46.00	84.05
24-PDIT-90	LIC Venturi Scrubber (In. WC)	26.70	23.60	26.02	28.00	24.40	25.84	28.10	25.60	26.94	27.40	13.30	24.94
24-LIT-115	Process Water to LIC Quench Tower (In. WC)	44.00	26.00	34.09	41.00	32.00	35.64	32.00	13.00	23.01	48.00	19.00	31.11
24-PDIT-108	Scrubber Water (In. WC)	9.00	6.70	8.09	8.00	6.00	7.06	7.50	6.00	6.91	7.20	1.50	6.38
24-LIT-132	LIC Quench Tower (IN. WC)	0.00	0.00	0.00	0.00	0.00	0.00	0.00	0.00	0.00	0.00	0.00	0.00
24-PIT-100	Quench Brine Pump Pressure (PSI)	94.00	90.00	91.35	98.00	85.00	89.11	95.00	88.00	90.69	102.00	80.00	95.14
24-FIT-88	Brine to LIC Venturi Scrubber (gpm)	172.70	165.60	169.90	171.70	167.40	169.62	173.90	161.90	169.72	175.20	163.20	169.66
24-DIT-93	Brine/Water to BRA (Lbs/cf)	74.90	72.30	73.75	76.00	70.10	72.68	76.90	73.30	75.50	77.80	73.30	75.55
24-PDIT-89	Brine to Venturi Scrubber Fltr dp (In. WC)	3.80	3.40	3.56	3.70	2.90	3.46	4.00	3.30	3.72	4.10	3.30	3.78
24-PIT-129	Clear Liquor Pump Discharge (PSI)	33.00	32.00	33.00	32.00	31.00	31.98	32.00	32.00	32.00	36.00	34.00	34.68
24-PDIT-82	Scrubber Tower 103 Demister (psi)	0.30	0.20	0.20	0.20	0.20	0.20	0.20	0.20	0.20	0.20	0.10	0.20
24-LIT-113	Process Water to Scrubber Tower (In. WC)	60.00	60.00	60.00	60.00	60.00	60.00	60.00	60.00	60.00	60.00	60.00	60.00
24-FIT-112	Clean Liquor to Scrubber Tower (gpm)	611.00	587.00	599.32	610.00	589.00	599.41	610.00	587.00	599.27	612.00	588.00	599.40
13-FIT-102	Spent Decon Feed (gpm)	3.33	3.20	3.28	3.38	3.23	3.32	3.71	3.22	3.28	3.50	2.98	3.34
24-DIT-117	Clean Liquor to Scrubber Tower (Lbs/cf)	64.00	62.80	63.32	62.00	61.70	61.98	62.30	62.00	62.13	67.20	65.80	66.65
24-PDIT-147	LIC Demister #1 Diff Press (In. WC)	4.90	3.50	4.46	6.70	2.90	5.40	11.60	6.70	10.50	4.40	2.60	4.12
24-LIT-143	Demister Water to LIC-SCRB-103 (In. WC)	7.00	3.00	4.70	7.00	2.00	4.12	9.00	6.00	7.47	9.00	4.00	7.48
24-PDIT-164	LIC Demister #2 Diff Press (In. WC)	0.00	0.00	0.00	0.00	0.00	0.00	0.00	0.00	0.00	0.00	0.00	0.00
24-LIT-161	LIC Demister #2 Level (In. WC)	2.00	1.00	1.06	2.00	2.00	2.00	2.00	2.00	2.00	4.00	4.00	4.00
13-TE-58	LIC Furnace Room Ambient Temp (F)	122.00	119.00	120.71	124.00	120.00	122.78	127.00	125.00	126.37	120.00	119.00	119.42
13-TE-126A	LIC-FURN-102 Refractory Temp (F)	2001.00	1990.00	1996.60	1997.00	1981.00	1978.70	1989.00	1961.00	1981.43	1983.00	1956.00	1968.22
13-TE-125A	LIC-FURN-101 Refractory Temp (F)	2201.00	2183.00	2190.83	2197.00	2066.00	2094.20	2102.00	2066.00	2090.90	2100.00	2058.00	2079.94
13-FIT-52	LIC Furnace Room Air Flow (acfh)	5648.00	5511.00	5651.80	5624.00	4956.00	5265.47	5221.00	5001.00	5109.11	5569.00	4517.00	5467.54
24-TE-439	LIC Furnace Exhaust Temp (F)	1218.00	1193.00	1208.90	1268.00	1229.00	1244.33	1268.00	1256.00	1274.36	1219.00	1202.00	1210.67
24-AIT-78	LIC PAS Exhaust CO Analyzer (ppm)	42.00	26.00	31.14	38.00	20.00	26.50	44.00	30.00	38.60	61.00	23.00	29.14
24-AIT-210	LIC PAS Exhaust O2 Analyzer (%)	14.60	14.10	14.22	16.60	13.40	13.79	14.20	13.20	13.53	17.80	13.80	14.12
13-AIT-132	LIC-FURN-102 Primary Chamber O2 Analyzer (%)	21.10	20.60	20.99	21.20	20.70	21.13	21.20	20.70	21.09	21.10	20.70	21.09

Page 1 of 2

Table 5-1

ID	Parameter	Test 1 Max	Test 1 Min	Test 1 Average	Test 2 Max	Test 2 Min	Test 2 Average	Test 3 Max	Test 3 Min	Test 3 Average	Test 4 Max	Test 4 Min	Test 4 Average
13-AIT-55	LIC-FURN-102 Second Chamber O2 Analyzer (%)	20.40	7.00	7.34	20.70	6.60	7.94	20.50	6.90	7.60	20.50	7.10	7.66
13-AIT-63	LIC-FURN-102 Sec. Chamber CO Analyzer (ppm)	143.00	7.00	18.51	163.00	0.00	14.39	178.00	10.00	15.52	273.00	7.00	18.01
13-PDIT-57	LIC Furnace Room Exh Air Diff Press (In. WC)	-0.80	-1.50	-1.16	-0.80	-1.30	-0.99	-0.80	-1.10	-0.94	0.00	-1.10	-1.03
13-FIT-42	Comb Air to LIC Primary Chamber (kscfh)	152.80	151.40	152.00	151.40	143.50	148.18	151.50	142.10	148.75	156.10	55.90	153.94
13-FIT-41	Fuel Oil to LIC Primary Chamber (gph)	44.40	41.90	43.44	34.70	28.00	32.04	67.80	13.60	18.08	18.30	0.00	18.37
13-FIT-50	Comb Air to LIC Secondary Chamber (kscfh)	17.00	16.80	16.87	18.00	16.60	16.92	17.80	16.70	16.88	17.80	16.80	17.01
13-FIT-51	Fuel Oil to LIC Secondary Chamber (gph)	12.20	11.80	12.00	13.60	11.80	12.03	12.80	11.80	12.01	12.60	11.90	12.09
TOTAL	LIC Furnace Daily Totalized Agent	7976.00	3816.00	6748.87	11798.00	7145.00	9440.21	14521.00	8357.00	12020.28	8674.00	3646.00	6675.43
40-FIT-22	Air Supply Flow (scfm)	60.00	14.00	23.04	18.00	0.00	2.20	19.00	0.00	1.44	34.00	0.00	7.15
40-PIT-21	LSS Air Supply Pressure (psi)	115.00	111.00	113.71	116.00	114.00	114.86	116.00	114.00	114.90	117.00	113.00	116.00
24-AIT-75	PAS-Stack 102 SOx (ppm)	188.00	4.00	8.38	18.00	12.00	13.44	19.00	4.00	4.88	8.00	3.00	4.41
24-AIT-76	PAS-Stack 102 NOx (ppm)	48.00	20.00	45.62	70.00	26.00	53.48	100.00	19.00	62.21	44.00	25.00	39.63
FEED ROHA	Agent Feed Rate (1 Hour Rolling Avg in Lbs)	864.00	719.00	849.82	1025.00	355.00	956.62	1329.00	1158.00	1319.69	1322.00	410.00	1176.63

TABLE 5-2

PROCESS DATA FROM MANUAL STACK SAMPLING[a]

	Test Run			
	1	2	3	4
Gas Flow, acfm	14033	13883	13815	14070
Gas Flow, dscfm	7144	6754	6674	6901
Gas Temperature, °F	193	193	195	194
Percent Moisture	37.1	39.8	40.0	39.1
Percent O_2 (dry)	14.5	14.3	14.1	14.5
Percent CO_2 (dry)	4.5	4.6	4.6	4.4
Total Gas Flow, lb/hr	44304	43244	42868	43804
Dry Gas Flow, lb/hr	32538	30776	30398	31410

[a]Averages of M5AT, and MMT results.

TABLE 5-3

INTEGRATED ORSAT STACK DATA

Date	Time	Carbon Dioxide (% Vol.)	Oxygen (% Vol.)	Nitrogen[a] (% Vol.)
8/19/92	1000 - 1100	4.8	14.4	80.8
	1100 - 1200	4.8	14.2	81.0
	1200 - 1300	4.6	14.4	81.0
	1300 - 1400	4.2	14.8	81.0
8/21/92	1825 - 1925	4.6	14.4	81.0
	1925 - 2025	4.6	14.3	81.1
	2025 - 2055[b]			
	2207 - 2237	4.7	14.1	81.2
	2237 - 2337	4.7	14.1	81.2
8/22/92	1350 - 1450	4.3	14.1	81.6
	1450 - 1550	4.8	14.0	81.2
	1550 - 1650	4.9	13.7	81.4
	1650 - 1750	4.6	14.2	81.2
8/25/92	1309 - 1409	4.3	14.5	81.2
	1409 - 1509	4.6	14.2	81.2
	1509 - 1541[b]			
	1637 - 1657	4.4	14.6	81.0
	1657 - 1757	4.4	14.6	81.0

[a]Obtained by difference.
[b]Sampling interrupted.

TABLE 5-4

AGENT HD AND DECONTAMINATION SOLUTION FEED RATES TO THE LIC

	Minimum	Maximum	Average*
Test Run 1			
Agent HD (lb/hr)	719.00	864.00	848.82
Decon Solution (gpm)	3.20	3.33	3.28
Test Run 2			
Agent HD (lb/hr)	355.00	1025.00	956.62
Decon Solution (gpm)	3.23	3.38	3.32
Test Run 3			
Agent HD (lb/hr)	1158.00	1329.00	1319.69
Decon Solution (gpm)	3.22	3.71	3.28
Test Run 4			
Agent HD (lb/hr)	410.00	1322.00	1178.63
Decon Solution (gpm)	2.98	3.50	3.34

* Rolling Hourly Average

TABLE 5-5

MODIFIED METHOD 5 TRAIN CONDITIONS AND RESULTS

Parameter	Units	Test Run 1	2	3	4
Date	--	8/19/92	8/21/92	8/22/92	8/25/92
Sample Time	minutes	240	240	240	240
Sample Volume	dscf	186.44	165.65	166.28	163.44
	dscm	5.28	4.69	4.71	4.63
Stack Gas Flow Rate	dscfm	9690	8217	8493	8518
Stack Gas Temperature	°F	200	202	204	203
Stack Gas Moisture	%	35.7	37.4	39.5	38.1
Percent Isokinetic		102.7	107.6	104.5	102.5
Oxygen Concentration[a]	%	14.5	14.2	14.0	14.5
CO_2 Concentration[a]	%	4.6	4.7	4.7	4.4
Leak Checks:					
Pitot Pre Test		pass	pass	pass	pass
Pitot Post Test		pass	pass	pass	pass
Train Pre Test	cfm at	0.000	0.001	0.000	0.008
	in. Hg	15	17	15	15
Train Post Test	cfm at	0.000	0.001	0.000	0.000
	in. Hg	17	12	15	16.5

[a]Gas composition from Orsat analysis.

TABLE 5-6

STACK GAS ANALYSES FOR SEMIVOLATILE PRODUCTS OF INCOMPLETE COMBUSTION

	Test Run			
	1	2	3	4
Sample Volume (dscm)	5.28	4.69	4.71	4.63
Emitted Substances	Concentration[a], μg/dscm			
Benzyl alcohol	4.5	274	160	12
3-Methylphenol	51	ND[b]	ND	ND
Benzoic acid	ND	ND	10	9.2
Dimethyl phthalate	8.1	8.5	3.9	115
Bis(2-ethylhexyl)phthalate	74	ND	ND	ND

[a]Values corrected using blank train results.
[b]ND = Not detected. Detection limits:

Test Run 1	2.2 μg/dscm for Benzoic acid
Test Runs 2 and 3	2.1 μg/dscm for 3-Methylphenol, Bis(2-ethylhexyl)phthalate and Benzoic acid
Test Run 4	1.9 μg/dscm for Bis(2-ethylhexyl)phthalate and 3-Methylphenol

TABLE 5-7

SEMIVOLATILE RESULTS SUMMARY FOR MM5 TRAIN

Sample Description	Sample No.	Target Compound	Amount, μg
BLANK TRAIN			
Filter and Front Wash	H01709	Benzyl alcohol	286
		Bis(2-ethylhexyl)phthalate	89.8
Resin and Back Wash	H01879	Benzyl alcohol	360
		Bis(2-ethylhexyl)phthalate	118
		3-Methylphenol	12.1
TEST RUN 1			
Filter and Front Wash	H01925	Benzyl alcohol	209
		3-Methylphenol	268
		Bis(2-ethylhexyl)phthalate	50.8
Resin and Back Wash	H01880	Benzyl alcohol	384
		Dimethyl phthalate	43
		Bis(2-ethylhexyl)phthalate	439
TEST RUN 2			
Filter and Front Wash	H01727	Benzyl alcohol	1570
Resin and Back Wash	H01883	Benzyl alcohol	286
		Dimethyl phthalate	39.7
		Bis(2-ethylhexyl)phthalate	90.3
TEST RUN 3			
Filter and Front Wash	H01728	Benzyl alcohol	1040
Resin and Back Wash	H01881	Benzyl alcohol	58.1
		Benzoic acid	47
		Dimethyl phthalate	18.4
		Bis(2-ethylhexyl)phthalate	10.7
TEST RUN 4			
Filter and Front Wash	H01733	Benzyl alcohol	340
Resin and Back Wash	H01885	Benzyl alcohol	138
		Benzoic acid	42.7
		Dimethyl phthalate	533
		Bis(2-ethylhexyl)phthalate	30.3

TABLE 5-8

SEMIVOLATILE TENTATIVELY IDENTIFIED COMPOUND RESULTS FOR MM5 TRAIN

Sample Description	Tentatively Identified Compound	Retention Time	Estimated Amount (μg)	Est. Stack Gas Conc., μg/dscm[a]
Lab Blank 1	Ethylbenzene	10.38	486	NA[b]
	1,4-Dimethylbenzene	11.02	1478	NA
	Nonane	11.52	836	NA
	Unknown, Aromatic	13.13	1944	NA
	Unknown, Aromatic	13.32	218	NA
	Unknown, Alkylbenzene	17.58	3159	NA
	1,1-(1,2-Ethanediyl)bis-benzene	24.55	159	NA
Lab Blank 2	Unknown, Alkylbenzene	10.87	215	NA
	Unknown, Dimethylbenzene	11.02	407	NA
	Nonane	11.52	343	NA
	Unknown, Aromatic	13.13	1039	NA
	Unknown, Alkylbenzene	17.58	2537	NA
	Unknown, Aromatic	24.56	515	NA
Water Blank 1	Ethylbenzene	10.86	333	NA
	Unknown, Dimethylbenzene	11.00	369	NA
	Nonane	11.48	61.1	NA
Field Blank Filter and Solvent	Unknown, Alkylbenzene	10.88	404	NA
	Unknown, Dimethylbenzene	11.03	487	NA
	Nonane	11.53	336	NA
	Unknown, Aromatic	13.15	1215	NA
	Unknown, Aromatic	16.42	228	
	Unknown, Aromatic	17.53	2490	
	1,1-(1,2-Ethanediyl)bis-benzene	24.54	161	NA

[a]Estimated stack gas concentration not corrected for blank values due to unknowns.
[b]NA = Not Applicable to blank samples.

LICHDS.VS1

TABLE 5-8 (Continued)

SEMIVOLATILE TENTATIVELY IDENTIFIED COMPOUND RESULTS FOR MM5 TRAIN

Sample Description	Tentatively Identified Compound	Retention Time	Estimated Amount (μg)	Est. Stack Gas Conc., μg/dscm[a]
Field Blank Resin and Water	Unknown, Alkylbenzene	10.82	246	NA[b]
	1,4-Dimethylbenzene	10.97	207	NA
	Unknown, Aromatic	13.09	1554	NA
	Unknown, Aromatic	16.17	78.8	NA
	Unknown, Aromatic	16.42	228	NA
	Unknown, Aromatic	16.79	340	NA
	Unknown, Aromatic	16.94	62.4	NA
	Unknown, Aromatic	17.42	316	NA
	1,1-(1,2-Ethanediyl)bis-benzene	24.54	129	NA
	Unknown, Ester	36.03	172	NA
Trip Blank Resin	Unknown, Alkylbenzene	10.85	11.3	NA
	1,4-Dimethylbenzene	10.99	71.6	NA
	Nonane	11.53	168	NA
	Unknown, Aromatic	13.14	560	NA
	Unknown, Aromatic	17.58	1648	NA
	Unknown, Hydrocarbon	18.00	10.5	NA
	Unknown, Hydrocarbon	24.62	252	NA
	Unknown, Hydrocarbon	37.92	20.2	NA
Blank Train Filter and Front Wash	Unknown, Hydrocarbon	10.23	50.2	NA
	Unknown, Alkylbenzene	10.82	792	NA
	Unknown, Dimethylbenzene	10.96	699	NA
	Nonane	11.48	767	NA
	Unknown, Aromatic	13.06	945	NA

[a]Estimated stack gas concentration not corrected for blank values due to unknowns.
[b]NA = Not Applicable to blank samples.

LICHD5.W51

TABLE 5-8 (Continued)

SEMIVOLATILE TENTATIVELY IDENTIFIED COMPOUND RESULTS FOR MM5 TRAIN

Sample Description	Tentatively Identified Compound	Retention Time	Estimated Amount (μg)	Est. Stack Gas Conc., μg/dscm[a]
Resin and Back Wash	Unknown, Hydrocarbon	10.22	33.3	NA[b]
	Unknown, Hydrocarbon	10.35	76.2	NA
	Unknown, Alkylbenzene	10.87	510	NA
	Unknown, Dimethylbenzene	11.06	988	NA
	Unknown, Alkylbenzene	11.34	43.3	NA
	Nonane	11.58	639	NA
	Unknown, Aromatic	13.07	629	NA
	Unknown, Hydrocarbon	17.64	37.9	NA
Test Run 1 Filter and Front Wash	Unknown, Alkane	10.25	37.9	7.18
	Ethylbenzene	10.79	367	69.5
	Unknown, Dimethylbenzene	10.96	614	116
	Nonane	11.50	436	82.6
	Unknown, Aromatic	13.06	557	105
Test Run 1 Resin and Back Wash	Unknown, Hydrocarbon	10.44	865	164
	Ethyl benzene	10.83	604	114
	Unknown, Hydrocarbon	10.69	2221	421
	Unknown, Dimethylbenzene	11.01	1451	275
	Nonane	11.52	686	130
	Unknown, Aromatic	13.06	605	115
	Unknown, Ester	36.00	60.6	11.5
Test Run 2 Filter and Front Wash	Ethyl benzene	10.45	774	1[illegible]
	Unknown, Dimethylbenzene	10.65	951	203
	Nonane	11.25	557	119
	Unknown, Aromatic	12.96	1628	347

[a]Estimated stack gas concentration not corrected for blank values due to unknowns.
[b]NA = Not Applicable to blank samples.

LICHD5.W51

TABLE 5-8 (Continued)

SEMIVOLATILE TENTATIVELY IDENTIFIED COMPOUND RESULTS FOR MM5 TRAIN

Sample Description	Tentatively Identified Compound	Retention Time	Estimated Amount (μg)	Est. Stack Gas Conc., μg/dscm[a]
Test Run 2 Resin and Back Wash	Unknown, Hydrocarbon	10.54	1207	257
	Ethyl benzene	10.85	606	129
	Unknown, Dimethylbenzene	10.99	375	80.0
	Nonane	11.47	370	78.9
	Unknown, Aromatic	13.03	493	105
	Unknown, Aromatic	17.90	54.9	11.7
Test Run 3 Filter and Front Wash	Unknown, Hydrocarbon	10.33	93.1	19.8
	Unknown, Alkylbenzene	10.88	364	77.3
	Unknown, Dimethylbenzene	11.05	1176	250
	Unknown, Alkane	11.59	625	133
	Unknown, Aromatic	13.17	1489	316
Test Run 3 Resin and Back Wash	Unknown, Hydrocarbon	10.37	417	88.5
	Unknown, Alkylbenzene	10.77	244	51.8
	Unknown, Dimethylbenzene	10.95	486	103
	Nonane	11.47	312	66.2
	Unknown, Aromatic	12.99	117	24.8
	Unknown, Aromatic	17.90	33.47	7.11
	Unknown, Alkane	39.58	30.5	6.48
	Unknown, Hydrocarbon	41.73	61.8	13.1
Test Run 4 Filter and Front Wash	Unknown, Dimethylbenzene	10.68	1705	368
	Nonane	11.27	1041	225
	Unknown, Aromatic	12.90	981	212

[a]Estimated stack gas concentration not corrected for blank values due to unknowns.

LTCHD5.W51

TABLE 5-8 (Continued)

SEMIVOLATILE TENTATIVELY IDENTIFIED COMPOUND RESULTS FOR MM5 TRAIN

Sample Description	Tentatively Identified Compound	Retention Time	Estimated Amount (μg)	Est. Stack Gas Conc., μg/dscm[a]
Test Run 4 Resin and Back Wash	Unknown, Hydrocarbon	9.73	209	45.1
	Unknown, Alkylbenzene	10.23	168	36.3
	Unknown, Dimethylbenzene	10.44	219	47.3
	Nonane	11.09	34.7	7.49
	Unknown, Aromatic	12.79	181	39.1
	Unknown, Aromatic	14.01	33.1	7.15
	Unknown, Aromatic	15.33	23.2	5.01
	Unknown, Alkane	15.91	40.3	8.70
	Unknown, Hydrocarbon	17.62	11.8	2.55
	Unknown, Aromatic	17.87	203	43.8
	Unknown, Hydrocarbon	19.19	18.1	3.91
	Unknown, Aromatic	20.62	140	30.2
	Unknown, Aromatic	24.47	14.7	3.17
	Unknown, Aromatic	34.78	11.7	2.53
	Unknown, Alkane	35.93	19.5	4.21
	Unknown, Alkane	37.09	20.1	4.34
	Unknown, Alkane	38.30	11.5	2.48
	Unknown, Alkane	42.61	31.8	6.87

[a]Estimated stack gas concentration not corrected for blank values due to unknowns.

TABLE 5-9

SEMIVOLATILE RESULTS IN SLAG LEACHATE

Sample ID	Run No.	Compound	Concentration, μg/L
Lab Blank (TCLP)	H01930	--	ND[a]
Slag (TCLP)	H01931	--	ND

[a]ND = None detected.

TABLE 5-10

PROCESS SAMPLES
SEMIVOLATILE RESULTS SUMMARY
TEST RUN 1

Sample ID	Sample No.	Compound	Concentration µg/L
Scrubber Brine Pre Test	(HO1813)	Bis(2-ethylhexyl)phthalate	621
Scrubber Brine Post Test	(HO1814)	Bis(2-ethylhexyl)phthalate	118
Scrubber Liquor Pre Test	(HO1811)	Bis(2-ethylhexyl)phthalate	279
Scrubber Liquor Post Test	(HO1801)	Bis(2-ethylhexyl)phthalate Hexachlorocyclopentadiene	81.2 62.0
Process Water Pre Test	(HO1817)	Bis(2-ethylhexyl)phthalate Diethlyphthalate	222 159
Process Water Post Test	(HO1818)	Bis(2-ethylhexyl)phthalate	431
Caustic Pre Test	(HO1815)	Bis(2-ethylhexyl)phthalate	312
Caustic Post Test	(HO1816)	Bis(2-ethylhexyl)phthalate	160
Fuel Oil Pre Test	(HO1914)	--	ND[a]
Fuel Oil Post Test	(HO1915)	--	ND

[a]ND = Not detected. Detection limit is 10 x 10^6 µg/L for Bis(2-ethylhexyl) phthalate.

TABLE 5-11

PROCESS SAMPLES
SEMIVOLATILE RESULTS SUMMARY
TEST RUN 2

Sample ID	Sample No.	Compound	Concentration µg/L
Scrubber Brine Pre Test	(H01845)	Bis(2-ethylhexyl)phthalate	2430
Scrubber Brine Post Test	(H01846)	Bis(2-ethylhexyl)phthalate	3800
Scrubber Liquor Pre Test	(H01843)	Bis(2-ethylhexyl)phthalate	2350
Scrubber Liquor Post Test	(H01844)	Bis(2-ethylhexyl)phthalate	1910
Process Water Pre Test	(H01784)	Bis(2-ethylhexyl)phthalate	63.1
Process Water Post Test	(H01823)	Bis(2-ethylhexyl)phthalate	47.1
Caustic Pre Test	(H01835)	--	ND[a]
Caustic Post Test	(H01824)	Bis(2-ethylhexyl)phthalate	141
Fuel Oil Pre Test	(H01916)	--	ND
Fuel Oil Post Test	(H01917)	--	ND

[a]ND = Not detected. Detection limit is 10 x 10^6 µg/L for Bis(2-ethylhexyl) phthalate.

TABLE 5-12

PROCESS SAMPLES
SEMIVOLATILE RESULTS SUMMARY
TEST RUN 3

Sample ID	Sample No.	Compound	Concentration µg/L
Scrubber Brine Pre Test	(H01860)	Bis(2-ethylhexyl)phthalate	758
Scrubber Brine Post Test	(H01861)	Bis(2-ethylhexyl)phthalate	1070
Scrubber Liquor Pre Test	(H01847)	Bis(2-ethylhexyl)phthalate	2160
Scrubber Liquor Post Test	(H01848)	Bis(2-ethylhexyl)phthalate	2540
Process Water Pre Test	(H01831)	Bis(2-ethylhexyl)phthalate	78.1
Process Water Post Test	(H01832)	Bis(2-ethylhexyl)phthalate	150
Caustic Pre Test	(H01825)	Bis(2-ethylhexyl)phthalate	800
Caustic Post Test	(H01936)	Di-n-octylphthalate	106
Fuel Oil Pre Test	(H01918)	--	ND[a]
Fuel Oil Post Test	(H01919)	--	ND

[a]ND = Not detected. Detection limit is 10 x 10^6 µg/L for Bis(2-ethylhexyl) phthalate and Di-n-octylphthalate in fuel oil (due to dilution factor).

TABLE 5-13

PROCESS SAMPLES
SEMIVOLATILE RESULTS SUMMARY
TEST RUN 4

Sample ID	Sample No.	Compound	Concentration µg/L
Scrubber Brine Pre Test	(H01903)	--	ND[a]
Scrubber Brine Post Test	(H01904)	--	ND
Scrubber Liquor Pre Test	(H01865)	--	ND
Scrubber Liquor Post Test	(H01905)	--	ND
Process Water Pre Test	(H01837)	--	ND
Process Water Post Test	(H01838)	--	ND
Caustic Pre Test	(H01839)	--	ND
Caustic Post Test	(H01840)	--	ND
Fuel Oil Pre Test	(H01920)	--	ND
Fuel Oil Post Test	(H01921)	--	ND

[a]ND = Not detected.

TABLE 5-14

STACK GAS ANALYSES FOR DIOXINS AND FURANS

		Test Run			
		1	2	3	4
Sample Volume (dscm)		5.28	4.69	4.71	4.63
Emitted Substances[a]		Concentration, μg/dscm			
PCDD/PCDF	TCDF	0.000081	0.000092	0.00020	0.0000071
	TCDD	0.0000073	0.000011	0.0000068	ND[b]
	PeCDF	0.000022	0.000023	0.000013	ND
	PeCDD	ND	ND	ND	ND
	HxCDF	0.000026	ND	ND	0.000073
	HxCDD	ND	ND	ND	ND
	HpCDF	ND	ND	0.00053	0.00014
	HpCDD	ND	ND	0.000070	0.000025
	OCDF	ND	ND	0.00020	0.000030
	OCDD	ND	ND	0.000056	ND

[a]Corrected for blank train values.
[b]ND = Not detected. Detection limits:

TR 1: 0.000021 μg/dscm for PeCDD, HxCDD, HpCDF and HpCDD
0.000042 μg/dscm for OCDF and OCDD

TR 2: 0.000021 μg/dscm for PeCDD, HxCDF, HxCDD, HpCDF and HpCDD
0.000042 μg/dscm for OCDF and OCDD

TR 3: 0.000021 μg/dscm for PeCDD, HxCDF and HxCDD

TR 4: 0.0000037 μg/dscm for TCDD
0.000019 μg/dscm for PeCDD, PeCDF and HxCDD
0.000038 μg/dscm for OCDD

TABLE 5-19

DETERMINATION OF TOTAL PCDDs/PCDFs IN BRINE SAMPLES

Sample Description	Sample No.	Concentration (ng/L)									
		TCDF	TCDD	PeCDF	PeCDD	HxCDF	HxCDD	HpCDF	HpCDD	OCDF	OCDD
SRI Blank (Test Run 1)	V05344	ND[a]	ND	ND	ND	ND	ND	ND	ND	ND	ND
SRI Blank (Test Run 2)	V05344	ND	ND	ND	ND	ND	ND	ND	ND	ND	ND
SRI Blank (Test Run 3)	V05409	ND	ND	ND	ND	ND	ND	ND	ND	ND	ND
SRI Blank (Test Run 4)	V05422	ND	ND	ND	ND	ND	ND	ND	ND	ND	ND
Test Run No. 1 Pre Test	V05362	ND	ND	ND	ND	ND	ND	ND	ND	ND	ND
Test Run No. 1 Post Test	V05371	ND	ND	ND	ND	ND	ND	ND	ND	ND	ND
Test Run No. 2 Pre Test	V05374	ND	ND	ND	ND	ND	ND	ND	ND	ND	ND
Test Run No. 2 Post Test	V05376	ND	ND	ND	ND	ND	ND	ND	ND	ND	ND
Test Run No. 3 Pre Test	V05404	ND	ND	ND	ND	ND	ND	ND	ND	ND	ND
Test Run No. 3 Post Test	V05410	ND	ND	ND	ND	ND	ND	ND	ND	ND	ND
Test Run No. 4 Pre Test	V05427	ND	ND	ND	ND	ND	ND	ND	ND	ND	ND
Test Run No. 4 Post Test	V05462	ND	ND	ND	ND	ND	ND	ND	ND	ND	ND

[a]ND = Not detected; detection limit of 0.04 ng/L for TCDFs and TCDDs; 0.20 ng/L for PeCDFs, PeCDDs, HxCDFs, HxCDDs, HpCDFs, and HpCDDs; and 0.40 ng/L for OCDFs and OCDDs.

L1CHD5.W51

TABLE 5-18

DETERMINATION OF TOTAL PCDDs/PCDFs IN SCRUBBER LIQUOR SAMPLES

Sample Description	Sample No.	Concentration (ng/L)									
		TCDF	TCDD	PeCDF	PeCDD	HxCDF	HxCDD	HpCDF	HpCDD	OCDF	OCDD
SRI Blank (Test Run 1)	V05344	ND[a]	ND	ND	ND	ND	ND	ND	ND	ND	ND
SRI Blank (Test Run 2)	V05344	ND	ND	ND	ND	ND	ND	ND	ND	ND	ND
SRI Blank (Test Run 3)	V05409	ND	ND	ND	ND	ND	ND	ND	ND	ND	ND
SRI Blank (Test Run 4)	V05422	ND	ND	ND	ND	ND	ND	ND	ND	ND	ND
Test Run No. 1 Pre Test	V05361	ND	ND	ND	ND	ND	ND	ND	ND	ND	ND
Test Run No. 1 Post Test	V05370	ND	ND	ND	ND	ND	ND	ND	ND	ND	ND
Test Run No. 2 Pre Test	V05373	ND	ND	ND	ND	ND	ND	ND	ND	ND	ND
Test Run No. 2 Post Test	V05375	ND	ND	ND	ND	ND	ND	ND	ND	ND	ND
Test Run No. 3 Pre Test	V05399	ND	ND	ND	ND	ND	ND	ND	ND	ND	ND
Test Run No. 3 Post Test	V05400	ND	ND	ND	ND	ND	ND	ND	ND	ND	ND
Test Run No. 4 Pre Test	V05426	ND	ND	ND	ND	ND	ND	ND	ND	ND	ND
Test Run No. 4 Post Test	V05430	ND	ND	ND	ND	ND	ND	ND	ND	ND	ND

[a]ND = Not detected; detection limit of 0.04 ng/L for TCDFs and TCDDs; 0.20 ng/L for PeCDFs, PeCDDs, HxCDFs, HxCDDs, HpCDFs, and HpCDDs; and 0.40 ng/L for OCDFs and OCDDs.

L1CHD5.W51

TABLE 5-21

DETERMINATION OF TOTAL PCDDs/PCDFs IN FUEL SAMPLES

Sample Description	Sample No.	Concentration (ng/kg)									
		TCDF	TCDD	PeCDF	PeCDD	HxCDF	HxCDD	HpCDF	HpCDD	OCDF	OCDD
SRI Blank	VO5548	ND[a]	ND	ND	ND	ND	ND	ND	ND	ND	ND
Test Run No. 1 Pre Test	VO5532	ND	ND	ND	ND	ND	ND	ND	ND	ND	ND
Test Run No. 1 Post Test	VO5538	ND	ND	ND	ND	ND	ND	ND	ND	ND	ND
Test Run No. 2 Pre Test	VO5539	ND	ND	ND	ND	ND	ND	ND	ND	ND	ND
Test Run No. 2 Post Test	VO5543	ND	ND	ND	ND	ND	ND	ND	ND	ND	ND
Test Run No. 3 Pre Test	VO5549	ND	ND	ND	ND	ND	ND	ND	ND	ND	ND
Test Run No. 3 Post Test	VO5540	ND	ND	ND	ND	ND	ND	ND	ND	ND	ND
Test Run No. 4 Pre Test	VO5550[b]	ND	ND	105	ND	204	143	98.7	49.4	86.4	104
Test Run No. 4 Post Test	VO5551	ND	ND	ND	ND	ND	ND	ND	ND	ND	ND

[a]ND = Not detected; detection limit of 10 ng/kg for TCDFs and TCDDs; 50 ng/kg for PeCDFs, PeCDDs, HxCDFs, HxCDDs, HpCDFs, and HpCDDs; and 100 ng/kg for OCDFs and OCDDs.
[b]Sample appears to be contaminated with target analytes only. Possible cross contamination from a matrix spike sample may have occurred. High surrogate recoveries for this sample also indicates contamination.

LTCHD5.V51

TABLE 5-20

DETERMINATION OF TOTAL PCDDs/PCDFs IN CAUSTIC SAMPLES

Sample Description	Sample No.	Concentration (ng/L)									
		TCDF	TCDD	PeCDF	PeCDD	HxCDF	HxCDD	HpCDF	HpCDD	OCDF	OCDD
SRI Blank (Test Run 1)	V05448	ND[a]	ND	ND	ND	ND	ND	ND	ND	ND	ND
SRI Blank (Test Run 2)	V05409	ND	ND	ND	ND	ND	ND	ND	ND	ND	ND
SRI Blank (Test Run 3)	V05308	0.06	ND	0.26	ND	ND	ND	ND	ND	ND	ND
SRI Blank (Test Run 4)	V05422	ND	ND	ND	ND	ND	ND	ND	ND	ND	ND
Test Run No. 1 Pre Test	V05530	ND	ND	ND	ND	ND	ND	ND	ND	ND	ND
Test Run No. 1 Post Test	V05531	ND	ND	ND	ND	ND	ND	ND	ND	ND	ND
Test Run No. 2 Pre Test	V05389	ND	ND	ND	ND	ND	ND	ND	ND	ND	ND
Test Run No. 2 Post Test	V05390	ND	ND	ND	ND	ND	ND	ND	ND	ND	ND
Test Run No. 3 Pre Test	V05413	ND	ND	ND	ND	ND	ND	ND	ND	ND	ND
Test Run No. 3 Post Test	V05414	ND	ND	ND	ND	ND	ND	ND	ND	ND	ND
Test Run No. 4 Pre Test	V05428	ND	ND	ND	ND	ND	ND	ND	ND	ND	ND
Test Run No. 4 Post Test	V05461	0.23[b]	0.85[b]	ND	ND	ND	ND	ND	ND	ND	ND

[a]ND = Not detected; detection limit of 0.04 ng/L for TCDFs and TCDDs; 0.20 ng/L for PeCDFs, PeCDDs, HxCDFs, HxCDDs, HpCDFs, and HpCDDs; and 0.40 ng/L for OCDFs and OCDDs.
[b]The components are not 2,3,7,8-TCDF or 2,3,7,8-TCDD.

LICHD5.V51

TABLE 5-22 (Continued)

DETERMINATION OF TARGET PCDDs/PCDFs IN SLAG

Sample Description	Sample No.	Concentration (ng/kg) 1,2,3,4,7,8,HxCDD[b]	1,2,3,6,7,8-HxCDD	1,2,3,7,8,9 HxCDD	1,2,3,4,6,7,8-HpCDF	1,2,3,4,7,8,9-HpCDF	1,2,3,4,6,7,8-HpCDD	OCDF	OCDD	2,3,7,8-TCDD Toxicity Equivalent
Lab Blank	V05537	ND[a]	ND	ND	ND	ND	ND	ND	ND	NC[b]
Slag	V05552	ND	ND	ND	17.2	11.5	ND	ND	ND	0.287

[a]ND = Not Detected; detection limit is 2 ng/kg for TDCFs and TCDDs; 10 ng/kg for PeCDFs, PeCDDs, HxCDFs, HxCDDs, HpCDFs, and HpCDDs; and 20 ng/kg for OCDF and OCDD.
[b]NC = Not calculated; no target compounds found, therefore, no Toxicity Equivalent can be calculated.

TABLE 5-22

DETERMINATION OF TARGET PCDDs/PCDFs IN SLAG

Sample Description	Sample No.	Amount (ng/kg)								
		2,3,7,8-TCDF	2,3,7,8-TCDD	1,2,3,7,8-PeCDF	2,3,4,7,8-PeCDF	1,2,3,7,8-PeCDD	1,2,3,4,7,8-HxCDF	1,2,3,6,7,8-HxCDF	1,2,3,7,8,9-HxCDF	2,3,4,6,7,8-HxCDF
Lab Blank	VO5537	ND[a]	ND	ND	ND	ND	ND	ND	ND	ND
Slag	VO5552	ND	ND	ND	ND	ND	ND	ND	ND	ND

[a]ND = Not Detected; detection limit is 2 ng/kg for TDCFs and TCDDs; 10 ng/kg for PeCDFs, PeCDDs, HxCDFs, HxCDDs, HpCDFs, and HpCDDs; and 20 ng/kg for OCDF and OCDD.

TABLE 5-24

STACK GAS ANALYSES FOR VOLATILE PRODUCTS
OF INCOMPLETE COMBUSTION

	Test Run			
	1	2	3	4
Sample Volume (dscm)	0.0828	0.0797	0.0798	0.0803
Emitted Substances[a]	Concentration, μg/dscm			
Chloromethane	35	41	4.8	44
Vinyl Chloride	2.1	ND[b]	0.52	ND
Acetone	7.9	12	13	18
Carbon Disulfide	10	ND	ND	7.8
Methylene Chloride	20	28	22	18
2-Butanone	17	20	23	118
Chloroform	7.5	13	21	16
Carbon Tetrachloride	8.4	23	43	20
cis-1,3-Dichloropropene	0.71	ND	ND	0.22
Benzene	16	7.4	6.2	5.5
Toluene	6.1	2.6	6.2	4.3
Chlorobenzene	1.6	1.9	0.95	1.8
Styrene	3.3	3.5	3.5	237
o-Xylene	0.91	0.45	0.47	0.98
Bromoform	5.6	2.1	3.2	ND
trans-1,3-Dichloropropene	0.43	0.45	ND	ND
m & p Xylene	ND	0.22	0.63	1.5
1,1,1-Trichloroethane	ND	ND	ND	9.4
Ethylbenzene	ND	0.41	ND	0.84
Tetrachloroethene	ND	ND	ND	0.69

[a]Values blank corrected.
[b]ND = Not detected; detection limit is 0.2 μg/dscm for volatile organics.

TABLE 5-23

DETERMINATION OF TOTAL PCDDs/PCDFs IN SLAG

Sample Description	Sample No.	Concentration (ng/kg)									
		TCDF	TCDD	PeCDF	PeCDD	HxCDF	HxCDD	HpCDF	HpCDD	OCDF	OCDD
Lab Blank	VO5537	ND[a]	ND	ND	ND	ND	ND	19.4	ND	ND	ND
Slag	VO5552	ND	ND	ND	ND	10.2	ND	34.0	ND	ND	ND

[a]ND = Not Detected; detection limit is 2 ng/kg for TDCFs and TCDDs; 10 ng/kg for PeCDFs, PeCDDs, HxCDFs, HxCDDs, HpCDFs, and HpCDDs; and 20 ng/kg for OCDF and OCDD.

L1CHD5.V51

VOST VOLATILE ORGANICS RESULTS SUMMARY
TEST RUN 1

Sample ID	Sample No.	Compound	Amount (ng)
		Chlorobenzene	32.3
		Styrene	68.7
		o-Xylene	20.1
		Bromoform	108
Pair #4		Chloromethane	867
Tenax	10J-2-54	Vinyl Chloride	58.6
Tenax/Charcoal	10J-2-55	Acetone	199
		Carbon Disulfide	750
		Methylene Chloride	471
		2-Butanone	361
		Chloroform	147
		Carbon Tetrachloride	191
		cis-1,3-Dichloropropene	19.3
		Benzene	257
		Toluene	52.7
		Chlorobenzene	31.1
		Styrene	65.7
		o-Xylene	17.1
		Bromoform	137
		trans-1,3-Dichloropropene	17.3
Field Blank		Methylene Chloride	32.3
Tenax	10J-2-56		
Tenax/Charcoal	10J-2-57		
Trip Blank		Carbon Disulfide	19.6
Tenax	10J-2-58	Methylene Chloride	66.6
Tenax/Charcoal	10J-2-59		
Condensate #1	10J-2-60	Methylene Chloride	195
Condensate #2	10J-2-61	Methylene Chloride	186
Condensate #3	10J-2-62	Methylene Chloride	373
Condensate #4	10J-2-63	Methylene Chloride	372
Condensate Blank	10J-2-64	Methylene Chloride	259

TABLE 5-25

VOST VOLATILE ORGANICS RESULTS SUMMARY
TEST RUN 1

Sample ID	Sample No.	Compound	Amount (ng)
Pair #1		Chloromethane	955
Tenax	10J-2-48	Vinyl Chloride	54.2
Tenax/Charcoal	10J-2-49	Acetone	121
		Carbon Disulfide	22
		Methylene Chloride	494
		2-Butanone	238
		Chloroform	177
		Carbon Tetrachloride	198
		cis-1,3-Dichloropropene	18.6
		Benzene	427
		Toluene	357
		Chlorobenzene	39.9
		Styrene	77.2
		o-Xylene	22.6
		Bromoform	107
Pair #2		Chloromethane	957
Tenax	10J-2-50	Vinyl Chloride	60.3
Tenax/Charcoal	10J-2-51	Acetone	143
		Carbon Disulfide	39.9
		Methylene Chloride	329
		2-Butanone	347
		Chloroform	150
		Carbon Tetrachloride	173
		cis-1,3-Dichloropropene	21.1
		Benzene	375
		Toluene	55
		Chlorobenzene	32
		Styrene	62.6
		o-Xylene	15.5
		Bromoform	114
		trans-1,3-Dichloropropene	18.2
Pair #3		Chloromethane	74.1
Tenax	10J-2-52	Acetone	191
Tenax/Charcoal	[a]	Carbon Disulfide	18.6
		Methylene Chloride	300
		2-Butanone	430
		Chloroform	144
		Carbon Tetrachloride	135
		Benzene	255
		Toluene	36.3

[a]Broken.

TABLE 5-26 (Continued)

VOST VOLATILE ORGANICS RESULTS SUMMARY
TEST RUN 2

Sample ID	Sample No.	Compound	Amount (ng)
Pair #4		Chloromethane	1083
Tenax	10J-3-40	Acetone	367
Tenax/Charcoal	10J-3-41	Carbon Disulfide	233
		Methylene Chloride	506
		2-Butanone	412
		Chloroform	260
		Carbon Tetrachloride	469
		Benzene	212
		Toluene	52.1
		Chlorobenzene	51.1
		Styrene	89.9
		o-Xylene	18.2
		Bromoform	54.9
		trans-1,3-Dichloropropene	17.7
		m & p Xylene	17.4
Field Blank		Carbon Disulfide	249
Tenax	10J-3-42	Methylene Chloride	107
Tenax/Charcoal	10J-3-43		
Condensate #1	10J-3-44	Methylene Chloride	181
Condensate #2	10J-3-45	Methylene Chloride	191
Condensate #3	10J-3-46		ND[a]
Condensate #4	10J-3-47	Methylene Chloride	131
Condensate Blank	10J-3-48		ND

[a]ND = Not detected. Detection limit is 15 ng.

TABLE 5-26

VOST VOLATILE ORGANICS RESULTS SUMMARY
TEST RUN 2

Sample ID	Sample No.	Compound	Amount (ng)
Pair #1		Chloromethane	959
Tenax	10J-3-34	Acetone	192
Tenax/Charcoal	10J-3-35	Methylene Chloride	509
		2-Butanone	408
		Chloroform	279
		Carbon Tetrachloride	487
		Benzene	91.9
		Toluene	75.8
		Chlorobenzene	33.6
		Ethylbenzene	32.8
		Styrene	60.1
		o-Xylene	17.7
		Bromoform	69.9
		trans-1,3-Dichloropropene	17.8
Pair #2		Chloromethane	120
Tenax	10J-3-36	Acetone	148
Tenax/Charcoal	10J-3-37	Carbon Disulfide	55.1
		Methylene Chloride	625
		2-Butanone	311
		Chloroform	261
		Carbon Tetrachloride	474
		Benzene	138
		Toluene	31.4
		Chlorobenzene	34.6
		Styrene	61.8
		Bromoform	46.1
Pair #3		Chloromethane	1121
Tenax	10J-3-38	Acetone	268
Tenax/Charcoal	10J-3-39	Carbon Disulfide	72.2
		Methylene Chloride	499
		2-Butanone	430
		Chloroform	238
		Carbon Tetrachloride	397
		Benzene	151
		Toluene	49.2
		Chlorobenzene	35.7
		Styrene	65.4

TABLE 5-27 (Continued)

VOST VOLATILE ORGANICS RESULTS SUMMARY
TEST RUN 3

Sample ID	Sample No.	Compound	Amount (ng)
Pair #4		Chloromethane	75.7
Tenax	10J-4-43	Methylene Chloride	454
Tenax/Charcoal	10J-4-44	2-Butanone	484
		Chloroform	453
		Carbon Tetrachloride	962
		Benzene	127
		Toluene	57.3
		Chlorobenzene	24.8
		Styrene	72
		Bromoform	64.5
		m & p Xylene	18.2
Field Blank		Carbon Disulfide	126
Tenax	10J-4-45	Methylene Chloride	171
Tenax/Charcoal	10J-4-46		
Trip Blank		Carbon Disulfide	36.3
Tenax	10J-4-47	Methylene Chloride	215
Tenax/Charcoal	10J-4-48		
Condensate #1	10J-4-49	Acetone	650
		Methylene Chloride	248
Condensate #2	10J-4-50		ND[a]
Condensate #3	10J-4-51		ND
Condensate #4	10J-4-52		ND
Condensate Blank	10J-4-53		ND

[a]ND = Not detected. Detection limit is 15 ng.

TABLE 5-27

VOST VOLATILE ORGANICS RESULTS SUMMARY
TEST RUN 3

Sample ID	Sample No.	Compound	Amount (ng)
Pair #1		Chloromethane	97.8
Tenax	10J-4-37	Vinyl Chloride	41.1
Tenax/Charcoal	10J-4-38	Acetone	359
		Carbon Disulfide	15.3
		Methylene Chloride	584
		2-Butanone	451
		Chloroform	387
		Carbon Tetrachloride	780
		Benzene	123
		Toluene	275
		Chlorobenzene	25.6
		Styrene	65.8
		o-Xylene	18.2
		Bromoform	61.5
		m & p Xylene	15.9
Pair #2		Chloromethane	112
Tenax	10J-4-39	Methylene Chloride	600
Tenax/Charcoal	10J-4-40	2-Butanone	462
		Chloroform	428
		Carbon Tetrachloride	772
		Benzene	119
		Toluene	95.9
		Chlorobenzene	25.6
		Styrene	70.6
		Bromoform	64.5
		m & p Xylene	16.3
Pair #3		Chloromethane	96.5
Tenax	10J-4-41	Methylene Chloride	512
Tenax/Charcoal	10J-4-42	2-Butanone	443
		Chloroform	437
		Carbon Tetrachloride	943
		Benzene	125
		Toluene	69
		Styrene	70.5
		o-Xylene	19.7
		Bromoform	61.9

TABLE 5-28 (Continued)

VOST VOLATILE ORGANICS RESULTS SUMMARY
TEST RUN 4

Sample ID	Sample No.	Compound	Amount (ng)
Pair #4		Chloromethane	1084
Tenax	10J-5-44	Acetone	572
Tenax/Charcoal	10J-5-45	Carbon Disulfide	133
		Methylene Chloride	873
		2-Butanone	2350
		Chloroform	358
		1,1,1-Trichloroethane	168
		Carbon Tetrachloride	393
		Toluene	36.2
		Chlorobenzene	26.4
		Ethylbenzene	19.7
		Styrene	5880
		m & p Xylene	23.4
		Benzene	96.5
Field Blank		Acetone	127
Tenax	10J-5-46	Methylene Chloride	408
Tenax/Charcoal	10J-5-47	Styrene	74.3
Trip Blank		Acetone	179
Tenax	10J-5-48	Carbon Disulfide	178
Tenax/Charcoal	10J-5-49	Methylene Chloride	269
Condensate #1	10J-5-50		ND[a]
Condensate #2	10J-5-51		ND
Condensate #3	10J-5-52		ND
Condensate #4	10J-5-53		ND
Condensate Blank	10J-5-54		ND

[a]ND = Not Detected; detection limit is 15 ng.

TABLE 5-28

VOST VOLATILE ORGANICS RESULTS SUMMARY
TEST RUN 4

Sample ID	Sample No.	Compound	Amount (ng)
Pair #1		Chloromethane	79.5
Tenax	10J-5-3844	Acetone	495
Tenax/Charcoal	10J-5-39	Carbon Disulfide	218
		Methylene Chloride	644
		2-Butanone	2630
		Chloroform	274
		1,1,1-Trichloroethane	199
		Carbon Tetrachloride	283
		Benzene	120
		Toluene	175
		Chlorobenzene	29.7
		Ethylbenzene	21.8
		Styrene	6850
		m & p Xylene	25.7
		Tetrachloroethene	55.5
Pair #2		Chloromethane	1181
Tenax	10J-5-40	Acetone	454
Tenax/Charcoal	10J-5-41	Carbon Disulfide	217
		Methylene Chloride	819
		2-Butanone	2190
		Chloroform	321
		1,1,1-Trichloroethene	215
		Carbon Tetrachloride	440
		Benzene	114
		Toluene	97.8
		Chlorobenzene	58.9
		Ethylbenzene	45.3
		Styrene	126
		m & p Xylene	44.7
Pair #3		Chloromethane	1154
Tenax	10J-5-42	Acetone	402
Tenax/Charcoal	10J-5-43	Carbon Disulfide	57.4
		Methylene Chloride	728
		2-Butanone	2290
		Chloroform	354
		1,1,1-Trichloroethane	171
		cis-1,3-Dichloropropene	17.9
		Carbon Tetrachloride	460
		Toluene	39
		Chlorobenzene	27.7
		m & p Xylene	26.4
		Styrene	6490
		o-Xylene	78.3
		Benzene	108

TABLE 5-29 (Continued)

AQUEOUS VOLATILE ORGANICS SUMMARY

Test Run	Sample ID	Sample No.	Compound	Concentration (μg/L)
3	Process Water Pre Test	10J-4-77	Bromoform	5.91
	Process Water Post Test	10J-4-106	Bromoform	115.9
	Caustic Pre Test	10J-4-71	Acetone	218
			2-Butanone	68.9
	Caustic Post Test	10J-4-100	Acetone	82.4
			2-Butanone	72.2
	Scrubber Brine Pre Test	10J-4-65	Acetone	52.4
			2-Butanone	32
	Scrubber Brine Post Test	10J-4-94	2-Butanone	17.9
	Scrubber Liquor Pre Test	10J-4-59		ND[a]
	Scrubber Liquor Post Test	10J-4-88		ND
4	Process Water Pre Test	10J-5-78	Bromoform	12
	Process Water Post Test	10J-5-106	Bromoform	12.4
	Caustic Pre Test	10J-5-72	Acetone	24.4
			2-Butanone	77.8
	Caustic Post Test	10J-5-101	2-Butanone	79.1
	Scrubber Brine Pre Test	10J-5-66	2-Butanone	56
	Scrubber Brine Post Test	10J-5-04	Methylene Chloride	7.2
			2-Butanone	18.7
	Scrubber Liquor Pre Test	10J-5-60	2-Butanone	13
	Scrubber Liquor Post Test	10J-5-88	2-Butanone	40.4

[a]ND = Not Detected. Detection limit is 3 μg/L.

TABLE 5-29

AQUEOUS VOLATILE ORGANICS SUMMARY

Test Run	Sample ID	Sample No.	Compound	Concentration (μg/L)
1	Process Water Pre Test	10J-2-90	Methylene Chloride	6.63
			Bromoform	8.47
	Process Water Post Test	10J-2-118	Bromoform	7.12
	Caustic Pre Test	10J-2-84	2-Butanone	71.8
	Caustic Post Test	10J-2-112	Acetone	27.6
			2-Butanone	83.8
	Scrubber Brine Pre Test	10J-2-78		ND[a]
	Scrubber Brine Post Test	10J-2-106		ND
	Scrubber Liquor Pre Test	10J-2-8		ND
	Scrubber Liquor Post Test	10J-2-99		ND
2	Process Water Pre Test	10J-3-72	Bromoform	11.4
	Process Water Post Test	10J-3-100	Bromoform	10.3
	Caustic Pre Test	10J-3-66	Acetone	21.1
			2-Butanone	70.4
	Caustic Post Test	10J-3-94	Acetone	115
			2-Butanone	77.3
	Scrubber Brine Pre Test	10J-3-60	2-Butanone	55
	Scrubber Brine Post Test	10J-3-99	2-Butanone	40
	Scrubber Liquor Pre Test	10J-3-54		ND
	Scrubber Liquor Post Test	10J-3-82		ND

TABLE 5-31

ACID TRAIN RESULTS
TEST RUN 1

Sample No.	Identification	Volume mL	Chloride µg/mL	HCl µg	Cl_2 µg
10J-2-3	Impinger 1	470	ND[a]	--	--
10J-2-4	Impinger 2	420	ND	--	--
10J-2-5	Impinger 3	390			
10J-2-6	Impinger 4	360	ND	--	--
10J-2-7	Impinger 5	140			
TOTAL		1780	--	--	--
10J-2-8	H_2SO_4 Blank	110	ND	--	--
10J-2-9	NaOH Blank	85	ND	--	--
10J-2-10	H_2O Lot #913875 Blank	100	ND	--	--

[a]ND = Not detected. Detection limit - Chloride = .21 µg/mL.

TABLE 5-30

METHOD 5 ACID TRAIN CONDITIONS AND RESULTS

Parameter	Units	Test Run 1	2	3	4
Date	--	8/19/92	8/21/92	8/22/92	8/25/92
Sample Time	minutes	120	120	120	120
Sample Volume	dscf	95.65	65.53	63.57	63.59
	dscm	2.71	1.86	1.80	1.80
Stack Gas Flow Rate	dscfm	7165	7102	6674	6905
	acfm	13,972	14,164	13,811	14,027
Stack Gas Temperature	°F	192	193	195	195
Stack Gas Moisture	%	36.7	37.9	40.0	38.9
Percent Isokinetic		101.9	97.3	100.5	97.1
HCl Concentration	mg/dscm	ND[a]	ND	0.661	ND
HCl Emission Rate	lb/hr	NA[b]	NA	0.0165	NA
Part. Catch	mg	0.7	4.4	4.3	3.7
Part. Concentration					
@ 7% O_2	gr/dscf	0.00024	0.00221	0.00213	0.00192
	mg/dscm	0.543	5.06	4.87	4.39
@ 12% CO_2	gr/dscf	0.00028	0.00270	0.00272	0.00244
	mg/dscm	0.645	6.17	6.22	5.59
Oxygen Concentration[c]	%	14.3	14.4	14.1	14.4
CO_2 Concentration[c]	%	4.8	4.6	4.6	4.4
Leak Checks:					
Pitot Pre Test		pass	pass	pass	pass
Pitot Post Test		pass	pass	pass	pass
Train Pre Test	cfm at	0.003	0.004	0.002	0.004
	in. Hg	15	16	15	15
Train Post Test	cfm at	0.003	0.000	0.000	0.000
	in. Hg	16.0	7.0	8.0	8.0

[a]ND = Not detected. Detection limit <0.15 mg/dscm.
[b]NA = Not applicable. No meaningful result can be calculated.
[c]Orsat values at stack.

TABLE 5-33

ACID TRAIN RESULTS
TEST RUN 3

Sample No.	Identification	Volume mL	Chloride μg/mL	HCl μg	Cl_2 μg
10J-4-3	Impinger 1	485	2.38	1154	--
10J-4-4	Impinger 2	500	ND[a]	--	--
10J-4-5	Impinger 3	260			
10J-4-6	Impinger 4	150	ND	--	--
10J-4-7	Impinger 5	145			
TOTAL		1540	--	1154	--
10J-2-9[b]	NaOH Blank	85	ND	--	--
10J-2-10[b]	H_2O Lot #913875 Blank	100	ND	--	--
10J-4-8	H_2SO_4 Blank	100	ND	--	--

[a]ND = Not detected. Detection limit - Chloride = .21 μg/mL.
[b]Water and sodium hydroxide solution from Test Run 2 were used during Test Run 3.

TABLE 5-32

ACID TRAIN RESULTS
TEST RUN 2

Sample No.	Identification	Volume mL	Chloride μg/mL	HCl μg	Cl_2 μg
10J-3-3	Impinger 1	475	ND[a]	--	--
10J-3-4	Impinger 2	485	ND	--	--
10J-3-5	Impinger 3	260			
10J-3-6	Impinger 4	150	ND	--	--
10J-3-7	Impinger 5	140			
TOTAL		1510	--	--	--
10J-2-8[b]	H_2SO_4 Blank	110	ND	--	--
10J-2-9[b]	NaOH Blank	85	ND	--	--
10J-2-10[b]	H_2O Lot #913875 Blank	100	ND	--	--

[a]ND = Not detected. Detection limit - Chloride = .21 μg/mL.
[b]Solutions from Test Run 1 were used during Test Run 2.

TABLE 5-35

ANION RESULTS IN PROCESS SAMPLES
TEST RUN 1

Sample No.	Description	Fluoride mg/L	Chloride mg/L	Phosphate mg/L	Sulfate mg/L
10J-2-69	Scrubber Liquor Pre Test	ND[a]	1150	ND	995
10J-2-97	Scrubber Liquor Post Test	ND	1310	ND	2170
10J-2-76	Brine Pre Test	ND	59500	ND	29000
10J-2-104	Brine Post Test	ND	55500	ND	21800
10J-2-82	Caustic Pre Test	626[b]	1900	ND	ND
10J-2-110	Caustic Post Test	578[b]	1780	ND	ND
10J-2-87	Process Water Pre Test	ND	359	ND	7.67
10J-2-104	Process Water Post Test	ND	364	ND	10.1
10J-2-92	Fuel Oil Pre Test	ND	ND	ND	ND
10J-2-120	Fuel Oil Post Test	ND	ND	ND	ND

[a]ND = Not detected. Detection limits given in Table 5-39.
[b]Flouride readings may be positive interference due to high caustic concentrations.

TABLE 5-34

ACID TRAIN RESULTS
TEST RUN 4

Sample No.	Identification	Volume mL	Chloride μg/mL	HCl μg	Cl_2 μg
10J-5-3	Impinger 1	455	ND[a]	--	--
10J-5-4	Impinger 2	490	ND	--	--
10J-3-5	Impinger 3	245			
10J-5-6	Impinger 4	135	ND	--	--
10J-5-7	Impinger 5	115			
TOTAL		1430	--	--	--
10J-5-8	H_2SO_4 Blank	95	ND	--	--
10J-5-9	NaOH Blank	110	ND	--	--
10J-5-10	H_2O Lot #922094 Blank	100	ND	--	--

[a]ND = Not detected. Detection limit - Chloride = .21 μg/mL.

TABLE 5-37

ANION RESULTS IN PROCESS SAMPLES
TEST RUN 3

Sample No.	Description	Fluoride mg/L	Chloride mg/L	Phosphate mg/L	Sulfate mg/L
10J-4-57	Scrubber Liquor Pre Test	ND[a]	908	ND	1840
10J-4-86	Scrubber Liquor Post Test	ND	1050	ND	2770
10J-4-63	Brine Pre Test	ND	38300	ND	16500
10J-4-92	Brine Post Test	ND	62700	ND	16900
10J-4-69	Caustic Pre Test	640[b]	2070	ND	ND
10J-4-98	Caustic Post Test	633[b]	2040	ND	ND
10J-4-75	Process Water Pre Test	ND	340	ND	8.32
10J-4-104	Process Water Post Test	ND	335	ND	8.65
10J-4-81	Fuel Oil Pre Test[a]	ND	ND	ND	ND
10J-4-108	Fuel Oil Post Test	ND	ND	ND	ND

[a]ND = Not detected. Detection limits are given in Table 5-39.
[b]Flouride readings may be positive interference due to high caustic concentrations.

TABLE 5-38

ANION RESULTS IN PROCESS SAMPLES
TEST RUN 4

Sample No.	Description	Fluoride mg/L	Chloride mg/L	Phosphate mg/L	Sulfate mg/L
10J-5-58	Scrubber Liquor Pre Test	ND[a]	1650	ND	2110
10J-5-86	Scrubber Liquor Post Test	ND	2200	ND	6010
10J-5-64	Brine Pre Test	ND	55400	ND	16700
10J-5-92	Brine Post Test	ND	61700	ND	20100
10J-5-70	Caustic Pre Test	670[b]	2210	ND	ND
10J-5-98	Caustic Post Test	644[b]	2050	ND	ND
10J-5-76	Process Water Pre Test	ND	356	ND	10.3
10J-5-104	Process Water Post Test	ND	350	ND	10.3
10J-5-80	Fuel Oil Pre Test	ND	ND	ND	ND
10J-5-108	Fuel Oil Post Test	ND	ND	ND	ND

[a]ND = Not detected. Detection limits are given in Table 5-39.
[b]Flouride readings may be positive interference due to high caustic concentrations.

TABLE 5-39

ANION DETECTION LIMITS

Description	Dilution Factors	Fluoride mg/L	Chloride mg/L	Phosphate mg/L	Sulfate mg/L
Scrubber Liquor	1:50	31.2	46.9	10.9	5.63[a]
Brine	1:2000	1250	1880	21900	11300
Caustic	1:200	125	188	2190	1120
Process Water	1:50	31.3	46.9	10.9	5.63[a]
Fuel Oil	--	0.625[a]	0.938	10.9[a]	5.63[a]

[a]Undiluted.

TABLE 5-40

METHOD 5 MULTIPLE METALS TRAIN CONDITIONS AND RESULTS

Parameter	Units	Test Run 1	2	3	4
Date	--	8/19/92	8/21/92	8/22/92	8/25/92
Sample Time	minutes	72	72	72	72
Sample Volume	dscf	56.37	52.50	52.08	55.14
	dscm	1.60	1.49	1.48	1.56
Stack Gas Flow Rate	dscfm	7122	6406	6674	6896
Stack Gas Temperature	°F	194	193	195	194
Stack Gas Moisture	%	37.4	41.7	40.1	39.3
Percent Isokinetic		100.5	104.3	99.3	101.8
Part. Catch	mg	1.6	1.0	0.6	0.8
Particulate Concentration					
@ 7% O_2	gr/dscf	0.000996	0.000600	0.000368	0.000493
	mg/dscm	2.28	1.37	0.84	1.13
@ 12% CO_2	gr/dscf	0.00125	0.000749	0.000463	0.000609
	mg/dscm	2.86	1.71	1.06	1.39
Oxygen Concentration[a]	%	14.8	14.1	14.2	14.6
CO_2 Concentration[a]	%	4.2	4.7	4.6	4.4
Leak Checks:					
Pitot Pre Test		pass	pass	pass	pass
Pitot Post Test		pass	pass	pass	pass
Train Pre Test	cfm at	0.004	0.006	0.008	0.004
	in. Hg	15	16	16.5	16
Train Post Test	cfm at	0.000	0.002	0.000	0.002
	in. Hg	9.0	9.0	9.0	10.0

[a]Orsat values at stack.

TABLE 5-41

STACK GAS ANALYSES FOR METALS

		Test Run			
		1	2	3	4
Sample Volume (dscm)		1.60	1.49	1.48	1.56
Emitted Substances[a]		Concentration, μg/dscm[b]			
Metals	Arsenic	ND[c]	ND	19	ND
	Selenium	ND	ND	7.2	ND
	Chromium	0.1	ND	2.2	1.6
	Lead	ND	ND	45	3.7
	Barium	ND	ND	ND	ND
	Tin	ND	ND	9.3	ND
	Phosphorus	8.8	22	67	76
	Zinc	21	225	34	34
	Boron	15	24	130	116
	Manganese	8.9	47	67	238
	Copper	ND	ND	5.0	ND
	Mercury	ND	ND	6.4	2.3
	Vanadium	ND	ND	ND	9.4

[a]Reported with two significant figures if greater than 1 μg/dscm and one significant figure if less than 1 μg/dscm.
[b]Values blank corrected based on field blanks.
[c]ND = Not detected, detection limits listed below.

Run 1: 3.1 μg/dscm for Arsenic, Selenium, Lead and Copper
6.3 μg/dscm for Barium and Tin
1.3 μg/dscm for Mercury and Vanadium

Run 2: 6.7 μg/dscm for Barium and Tin
3.4 μg/dscm for Arsenic, Selenium, Lead and Copper
1.4 μg/dscm for Mercury and Vanadium
2.1 μg/dscm for Chromium

Run 3: 3.4 μg/dscm for Lead
1.4 μg/dscm for Vanadium

Run 4: 3.2 μg/dscm for Selenium and Copper
6.4 μg/dscm for Barium and Tin

TABLE 5-42

METALS TRAIN RESULTS - TEST RUN 1
All Results Reported in Total μg

Sample Description	Front[a]	Back[b]	Mercury	Field Blank Front	Field Blank Back	Mercury Field Blank
As	11.8	<5		13.5	<5	
Se	<5	<5		<5	<5	
Cr	2.85	<3		2.64	<3	
Cd	<2	<3		<2	<3	
Pb	<5	<5		<5	<5	
Ba	<10	<10		<10	<10	
Be	<2	<2		<2	<2	
Ag	<10	<10		<10	<10	
Sn	<10	<10		<10	<10	
Sb	<10	<10		<10	<10	
P	75.5	21.5		73.0	10.0	
Zn	13.6	20.2		<5	<5	
Co	<5	<5		<5	<5	
Ni	<5	<5		<5	<5	
B	145	23.3		161	<10	
Mn	<2	14.2		<2	<2	
V	<2	<2		<2	<2	
Cu	<5	<5		<5	<5	
Hg	<0.2	<5	<2.0	<0.2	<0.5	<1.0
Tl	<1.0	<1.0		<1.0	<1.0	

[a]Front half of MMT samples include the combined filter, acetone and nitric acid front washes.
[b]Back half of MMT samples include the nitric acid/peroxide impingers.

TABLE 5-43

METALS TRAIN RESULTS - TEST RUN 2
All Results Reported in Total μg

Sample Description	Front[a]	Back[b]	Mercury	Field Blank Front[c]	Field Blank Back	Mercury Field Blank
As	8.96	<5		13.5	<5	
Se	<5	<5		<5	<5	
Cr	2.29	<3		2.64	<3	
Cd	<2	<3		<2	<3	
Pb	<5	<5		<5	<5	
Ba	<10	<10		<10	<10	
Be	<2	<2		<2	<2	
Ag	<10	<10		<10	<10	
Sn	<10	<10		<10	<10	
Sb	<10	<10		<10	<10	
P	98.3	23.4		73.0	16.2	
Zn	<5	356		<5	21.2	
Co	<5	<5		<5	<5	
Ni	<5	<5		<5	<5	
B	197	<10		161	<10	
Mn	<2	70.4		<2	<2	
V	<2	<2		<2	<2	
Cu	<5	<5		<5	<5	
Hg	<0.2	<5	<2	<0.2	<0.5	<1.0
Tl	<1.0	<1.0		<1.0	<1.0	

[a]Front half of MMT samples include the combined filter, acetone and nitric acid front washes.
[b]Back half of MMT samples include the nitric acid/peroxide impingers.
[c]No front blank received for TR2. Values used are from Test Run 1.

TABLE 5-44

METALS TRAIN RESULTS - TEST RUN 3
All Results Reported in Total μg

Sample Description	Front[a]	Back[b]	Mercury	Field Blank Front[c]	Field Blank Back	Mercury Field Blank
As	41.3	<5		13.5	<5	
Se	10.7	<5		<5	<5	
Cr	5.84	<3		2.64	<3	
Cd	<2	<3		<2	<3	
Pb	66.6	<5		<5	<5	
Ba	<10	<10		<10	<10	
Be	<2	<2		<2	<2	
Ag	<10	<10		<10	<10	
Sn	13.7	<10		<10	<10	
Sb	<10	<10		<10	<10	
P	149	23.6		73.0	<10	
Zn	20.3	53.7		<5	23.0	
Co	<5	<5		<5	<5	
Ni	<5	<5		<5	<5	
B	329	23.7		161	<10	
Mn	3.33	95.8		<2	<2	
V	<2	<2		<2	<2	
Cu	<5	7.46		<5	<5	
Hg	<0.2	<5	9.44	<0.2	<0.5	<1.0
Tl	<1.0	<1.0		<1.0	<1.0	

[a]Front half of MMT samples include the combined filter, acetone and nitric acid front washes.
[b]Back half of MMT samples include the nitric acid/peroxide impingers.
[c]No front blank received for Test Run 3. Values used are from Test Run 1.

TABLE 5-45

METALS TRAIN RESULTS - TEST RUN 4
All Results Reported in Total μg

Sample Description	Front[a]	Back[b]	Mercury	Field Blank Front	Field Blank Back	Mercury Field Blank
As	8.66	<5		14.6	<5	
Se	<5	<5		<5	<5	
Cr	2.43	<3		<2	<3	
Cd	<2	<3		3.49	<3	
Pb	<5	5.70		<5	<5	
Ba	<10	<10		<10	<10	
Be	<2	<2		<2	<2	
Ag	<10	<10		<10	<10	
Sn	<10	<10		<10	<10	
Sb	<10	<10		<10	<10	
P	93.3	24.6		<10	<10	
Zn	19.9	59.7		<5	26.5	
Co	<5	<5		<5	<5	
Ni	<5	<5		<5	<5	
B	181	<10		<10	<10	
Mn	<2	371		<2	<2	
V	<2	14.7		<2	<2	
Cu	<5	<5		<5	<5	
Hg	<0.2	<5	3.60	<0.2	<0.5	<1.0
Tl	<1.0	<1.0		<1.0	<1.0	

[a]Front half of MMT samples include the combined filter, acetone and nitric acid front washes.
[b]Back half of MMT samples include the nitric acid/peroxide impingers.

TABLE 5-46

TCLP METAL ANALYSIS RESULTS - TEST RUN 1 PROCESS SAMPLES
(All results in mg/L except Mercury [μg/L])

Sample No.	Sample Description	As	Se	Cr	Cd	Pb	Ba	Be	Ag	Sn
10J-2-69	Scrubber Liquor Pre Test	<0.05	<0.05	0.42	<0.02	0.35	<0.10	<0.02	<0.10	<0.10
10J-2-97	Scrubber Liquor Post Test	<0.05	<0.05	0.32	<0.02	0.11	<0.10	<0.02	<0.10	<0.10
10J-2-76	Scrubber Brine Pre Test	0.77	0.38	2.57	0.05	0.74	<0.10	<0.02	<0.10	<0.10
10J-2-104	Scrubber Brine Post Test	1.05	0.48	2.07	0.04	0.47	<0.10	<0.02	<0.10	<0.10
10J-2-82	Caustic Pre Test	<0.05	<0.05	<0.02	<0.02	0.10	<0.10	<0.02	<0.10	<0.10
10J-2-110	Caustic Post Test	<0.05	<0.05	<0.02	<0.02	0.11	<0.10	<0.02	<0.10	<0.10
10J-2-88	Process Water Pre Test	<0.05	<0.05	<0.02	<0.02	<0.05	<0.10	<0.02	<0.10	<0.10
10J-2-116	Process Water Post Test	<0.05	<0.05	<0.02	<0.02	<0.05	<0.10	<0.02	<0.10	<0.10
10J-2-92	Fuel Oil Pre Test	<0.05	<0.05	<0.02	<0.02	<0.05	<0.10	<0.02	<0.10	<0.10
10J-2-120	Fuel Oil Post Test	<0.05	<0.05	<0.02	<0.02	<0.05	<0.10	<0.02	<0.10	<0.10

Sample No.	Sample Description	Sb	Zn	Co	Ni	V	Cu	Hg	Tl
10J-2-69	Scrubber Liquor Pre Test	<0.10	0.42	<0.05	0.066	<0.02	0.23	<0.3	<0.010
10J-2-97	Scrubber Liquor Post Test	<0.10	0.16	<0.05	0.056	<0.02	0.19	<0.3	<0.010
10J-2-76	Scrubber Brine Pre Test	<0.10	2.10	<0.05	1.98	0.22	1.60	2.38	<0.40
10J-2-104	Scrubber Brine Post Test	<0.10	0.18	<0.05	3.36	0.30	1.66	2.45	<0.40
10J-2-82	Caustic Pre Test	<0.10	0.34	<0.05	<0.05	<0.02	0.11	<0.8	<0.40
10J-2-110	Caustic Post Test	<0.10	0.26	<0.05	<0.05	<0.02	<0.05	<0.8	<0.40
10J-2-88	Process Water Pre Test	<0.10	<0.05	<0.05	<0.05	<0.02	<0.05	<0.3	<0.010
10J-2-116	Process Water Post Test	<0.10	<0.05	<0.05	<0.05	<0.02	<0.05	<0.3	<0.010
10J-2-92	Fuel Oil Pre Test	<0.10	<0.05	<0.05	<0.05	<0.02	<0.05	<20	<0.010
10J-2-120	Fuel Oil Post Test	<0.10	0.087	<0.05	<0.05	<0.02	<0.05	<20	<0.010

TABLE 5-47

TCLP METAL ANALYSIS RESULTS - TEST RUN 2 PROCESS SAMPLES
(All results in mg/L except Mercury [μg/L])

Sample No.	Sample Description	As	Se	Cr	Cd	Pb	Ba	Be	Ag	Sn
10J-3-52	Scrubber Liquor Pre Test	<0.05	<0.05	0.11	<0.02	0.079	<0.10	<0.02	<0.10	<0.10
10J-3-80	Scrubber Liquor Post Test	<0.05	<0.05	0.097	<0.02	0.054	<0.10	<0.02	<0.10	0.21
10J-3-58	Scrubber Brine Pre Test	1.39	0.47	1.00	0.04	0.32	<0.10	<0.02	<0.10	<0.10
10J-3-86	Scrubber Brine Post Test	1.41	0.42	1.06	0.04	0.28	<0.10	<0.02	<0.10	<0.10
10J-3-64	Caustic Pre Test	0.06	0.09	<0.02	0.11	0.19	<0.10	<0.02	<0.10	0.52
10J-3-92	Caustic Post Test	<0.05	<0.05	<0.02	<0.02	<0.05	<0.10	<0.02	<0.10	<0.10
10J-3-70	Process Water Pre Test	<0.05	<0.05	<0.02	<0.02	<0.05	<0.10	<0.02	<0.10	<0.10
10J-3-98	Process Water Post Test	<0.05	<0.05	<0.02	<0.02	<0.05	<0.10	<0.02	<0.10	<0.10
10J-3-74	Fuel Oil Pre Test	<0.05	<0.05	<0.02	<0.02	<0.05	<0.10	<0.02	<0.10	<0.10
10J-3-102	Fuel Oil Post Test	<0.05	<0.05	<0.02	<0.02	<0.05	<0.10	<0.02	<0.10	<0.10

Sample No.	Sample Description	Sb	Zn	Co	Ni	V	Cu	Hg	Tl
10J-3-52	Scrubber Liquor Pre Test	<0.10	0.21	<0.05	0.053	<0.02	0.10	<0.3	<0.010
10J-3-80	Scrubber Liquor Post Test	<0.10	0.16	<0.05	0.057	<0.02	0.080	<0.3	<0.010
10J-3-58	Scrubber Brine Pre Test	<0.10	1.12	<0.05	0.70	0.26	1.54	2.27	<0.40
10J-3-86	Scrubber Brine Post Test	<0.10	1.18	<0.05	1.00	0.26	1.60	1.16	<0.40
10J-3-64	Caustic Pre Test	<0.10	0.64	<0.05	<0.05	<0.02	0.20	<0.8	<0.40
10J-3-92	Caustic Post Test	<0.10	0.48	<0.05	<0.05	<0.02	0.17	<0.8	<0.40
10J-3-70	Process Water Pre Test	<0.10	<0.05	<0.05	<0.05	<0.02	<0.05	<0.3	<0.010
10J-3-98	Process Water Post Test	<0.10	<0.05	<0.05	<0.05	<0.02	<0.05	<0.3	<0.010
10J-3-74	Fuel Oil Pre Test	<0.10	0.15	<0.05	<0.05	<0.02	<0.05	<20	<0.010
10J-3-102	Fuel Oil Post Test	<0.10	0.054	<0.05	<0.05	<0.02	<0.05	<20	<0.010

TABLE 5-48

TCLP METAL ANALYSIS RESULTS - TEST RUN 3 PROCESS SAMPLES
(All results in mg/L except Mercury [μg/L])

Sample No.	Sample Description	As	Se	Cr	Cd	Pb	Ba	Be	Ag	Sn
10J-4-57	Scrubber Liquor Pre Test	<0.05	<0.05	0.076	<0.02	0.069	<0.10	<0.02	<0.10	<0.10
10J-4-86	Scrubber Liquor Post Test	<0.05	<0.05	<0.10	0.062	<0.05	<0.10	<0.02	<0.10	<0.10
10J-4-63	Scrubber Brine Pre Test	0.73	0.30	1.08	0.02	0.21	<0.10	<0.02	<0.10	<0.10
10J-4-92	Scrubber Brine Post Test	1.72	0.69	0.83	0.04	0.28	<0.10	<0.02	<0.10	<0.10
10J-4-69	Caustic Pre Test	<0.05	<0.08	<0.02	<0.02	0.11	0.20	<0.02	<0.10	0.42
10J-4-98	Caustic Post Test	0.10	<0.05	<0.02	<0.02	0.16	<0.17	<0.02	<0.10	0.50
10J-4-75	Process Water Pre Test	<0.05	<0.05	<0.02	<0.02	<0.05	<0.10	<0.02	<0.10	<0.10
10J-4-104	Process Water Post Test	<0.05	<0.05	<0.02	<0.02	<0.05	<0.10	<0.02	<0.10	1.43
10J-4-74	Fuel Oil Pre Test	<0.05	<0.05	<0.02	<0.02	<0.05	<0.10	<0.02	<0.10	<0.10
10J-4-102	Fuel Oil Post Test	<0.05	<0.05	<0.02	<0.02	<0.05	<0.10	<0.10	<0.10	<0.10

Sample No.	Sample Description	Sb	Zn	Co	Ni	V	Cu	Hg	Tl
10J-4-57	Scrubber Liquor Pre Test	<0.10	0.48	<0.05	0.094	<0.02	0.10	<0.3	<0.010
10J-4-86	Scrubber Liquor Post Test	<0.10	0.17	<0.05	0.056	<0.02	0.21	<0.3	<0.010
10J-4-63	Scrubber Brine Pre Test	<0.10	0.98	<0.05	0.72	0.19	0.96	2.27	<0.40
10J-4-92	Scrubber Brine Post Test	<0.10	1.28	<0.05	0.68	0.36	2.02	1.16	<0.40
10J-4-69	Caustic Pre Test	<0.10	0.70	<0.05	<0.05	<0.02	0.18	<0.8	<0.40
10J-4-98	Caustic Post Test	<0.10	0.52	<0.05	<0.05	<0.02	0.17	<0.8	<0.40
10J-4-75	Process Water Pre Test	<0.10	<0.05	<0.05	<0.05	<0.02	<0.05	<0.3	<0.010
10J-4-104	Process Water Post Test	<0.10	<0.05	<0.05	<0.05	<0.02	<0.05	<0.3	<0.010
10J-4-81	Fuel Oil Pre Test	<0.10	<0.05	<0.05	<0.05	<0.02	<0.05	<20	<0.010
10J-4-108	Fuel Oil Post Test	<0.10	<0.05	<0.05	<0.05	<0.02	<0.05	<20	<0.010

LICHD5.V51

TABLE 5-49

TCLP METAL ANALYSIS RESULTS - TEST RUN 4 PROCESS SAMPLES
(All results in mg/L except Mercury [μg/L])

Sample No.	Sample Description	As	Se	Cr	Cd	Pb	Ba	Be	Ag	Sn
10J-5-58	Scrubber Liquor Pre Test	<0.10	<0.05	0.28	<0.02	0.21	<0.10	<0.02	<0.10	<0.10
10J-5-86	Scrubber Liquor Post Test	<0.10	<0.10	0.31	0.033	0.88	<0.10	<0.02	<0.10	<0.10
10J-5-64	Scrubber Brine Pre Test	0.95	0.38	1.00	0.03	0.38	<0.10	<0.02	<0.10	<0.10
10J-5-92	Scrubber Brine Post Test	1.25	0.47	0.43	0.03	0.27	<0.10	<0.02	<0.10	<0.10
10J-5-70	Caustic Pre Test	<0.05	<0.05	<0.02	<0.02	0.18	0.17	<0.02	<0.10	<0.10
10J-5-98	Caustic Post Test	<0.05	<0.05	<0.02	<0.02	0.14	0.15	<0.02	<0.10	<0.10
10J-5-76	Process Water Pre Test	<0.05	<0.05	<0.02	<0.02	<0.05	<0.10	<0.02	<0.10	<0.10
10J-5-104	Process Water Post Test	<0.05	<0.05	<0.02	<0.02	<0.05	<0.10	<0.02	<0.10	<0.10
10J-5-80	Fuel Oil Pre Test	<0.05	<0.05	<0.02	<0.02	<0.05	<0.10	<0.02	<0.10	<0.10
10J-5-108	Fuel Oil Post Test	<0.05	<0.05	<0.02	<0.02	<0.05	<0.10	<0.02	<0.10	<0.10

Sample No.	Sample Description	Sb	Zn	Co	Ni	V	Cu	Hg	Tl
10J-5-58	Scrubber Liquor Pre Test	<0.10	0.31	<0.05	0.10	<0.02	0.33	<0.3	<0.010
10J-5-86	Scrubber Liquor Post Test	<0.10	1.09	<0.05	0.98	0.023	0.99	<0.3	<0.010
10J-5-64	Scrubber Brine Pre Test	<0.10	1.00	<0.05	0.80	0.24	1.72	1.06	<0.40
10J-5-92	Scrubber Brine Post Test	<0.10	0.96	<0.05	0.80	0.26	1.50	2.60	<0.40
10J-5-70	Caustic Pre Test	<0.10	0.64	<0.05	<0.05	0.056	0.18	<0.8	<0.40
10J-5-98	Caustic Post Test	<0.10	1.40	<0.05	<0.05	0.054	0.28	<0.8	<0.40
10J-5-76	Process Water Pre Test	<0.10	<0.05	<0.05	<0.05	<0.02	<0.05	<0.3	<0.010
10J-5-104	Process Water Post Test	<0.10	<0.05	<0.05	<0.05	<0.02	<0.05	<0.03	<0.010
10J-5-80	Fuel Oil Pre Test	<0.10	<0.05	<0.05	<0.05	<0.02	<0.05	<20	<0.010
10J-5-108	Fuel Oil Post Test	<0.10	0.051	<0.05	<0.05	<0.02	<0.05	<20	<0.010

TABLE 5-50

METAL ANALYSES OF SLAG TCLP EXTRACT
(μg/mL)

	Concentration	Regulatory Limit
As*	0.13	5.0
Se*	<0.10	1.0
Cr*	98.3	5.0
Cd*	<0.02	1.0
Pb*	<0.05	5.0
Ba*	<0.10	100.0
Be	<0.02	NA
Ag*	<0.05	NA
Sn	<0.10	NA
Sb	1.24	NA
Zn	0.07	NA
Co	<0.05	NA
Ni	0.09	NA
V	0.12	NA
Cu	<0.02	NA
Hg*	<0.0005	0.2
Tl	<0.01	NA

*Indicates TCLP metal.
NA = No applicable regulatory limit.

TABLE 5-51

REACTIVITY AND pH

Test Run	Sample ID	Sample Description	pH	Reactivity[a] CN	Reactivity[a] S
1	10J-2-69	Scrubber Liquor Pre Test	9.39	<0.05	2.0
	10J-2-97	Scrubber Liquor Post Test	9.14	<0.05	<0.5
	10J-2-76	Scrubber Brine Pre Test	12.3	<0.05	36,800
	10J-2-104	Scrubber Brine Post Test	10.79	<0.05	47,200
	10J-2-88	Process Water Pre Test	6.00	[b]	[b]
	10J-2-114	Process Water Post Test	3.55	[b]	[b]
2	10J-3-52	Scrubber Liquor Pre Test	8.86	<0.05	<0.5
	10J-3-80	Scrubber Liquor Post Test	8.52	<0.05	<0.5
	10J-3-58	Scrubber Brine Pre Test	12.24	<0.05	44,000
	10J-3-86	Scrubber Brine Post Test	12.34	<0.05	36,000
	10J-3-70	Process Water Pre Test	7.54	[b]	[b]
	10J-3-98	Process Water Post Test	8.09	[b]	[b]
3	10J-4-57	Scrubber Liquor Pre Test	8.36	<0.05	<0.5
	10J-4-86	Scrubber Liquor Post Test	8.69	<0.05	2.0
	10J-4-63	Scrubber Brine Pre Test	6.95	<0.05	16,800
	10J-4-92	Scrubber Brine Post Test	12.3	<0.05	52,000
	10J-4-75	Process Water Pre Test	8.04	[b]	[b]
	10J-4-104	Process Water Post Test	6.96	[b]	[b]
4	10J-5-58	Scrubber Liquor Pre Test	9.86	<0.05	2.0
	10J-5-86	Scrubber Liquor Post Test	9.69	<0.05	14.0
	10J-5-64	Scrubber Brine Pre Test	8.30	<0.05	44,000
	10J-5-92	Scrubber Brine Post Test	7.05	<0.05	44,800
	10J-5-76	Process Water Pre Test	8.12	[b]	[b]
	10J-5-104	Process Water Post Test	8.01	[b]	[b]

[a]In mg/L for liquids.
[b]Reactivity not determined.

TABLE 5-52

AGENT FEED RATE AND DRE

	Test Run			
	1	2	3	4
Agent Feed (lb/hr) (Rolling Hourly Average)	848.8	956.6	1319.7	1178.6
Agent Concentration at LOQ (mg/m^3)	<0.0057	<0.0087	<0.0063	<0.0063
Average Gas Flow (acfm)[a]	14,033	13,883	13,815	14,070
Upper Limit of Agent Emission (lb/hr)[b]	<0.000299	<0.000453	<0.000326	<0.000332
DRE (%)	>99.999965	>99.999953	>99.999975	>99.999972

[a]Average of M5AT and MMT.
[b]Calculated from LOQ; maximum emission rate which could have escaped detection.

TABLE 5-53

TOTAL HYDROCARBONS IN STACK GAS
(Expressed as Propane)

Test Run	Gas Stream Monitor (ppm)	Condensate (ppm)	Total (ppm)	Emission Rate (lb/hr)
1	3.0	0.02	3.02	0.146
2	2.5	0.41	2.91	0.166
3	2.0	0.64	2.64	0.119
4	2.5	0.35	2.85	0.133

Figure 5-1

TR #1: LIC-102 Secondary Chamber O2

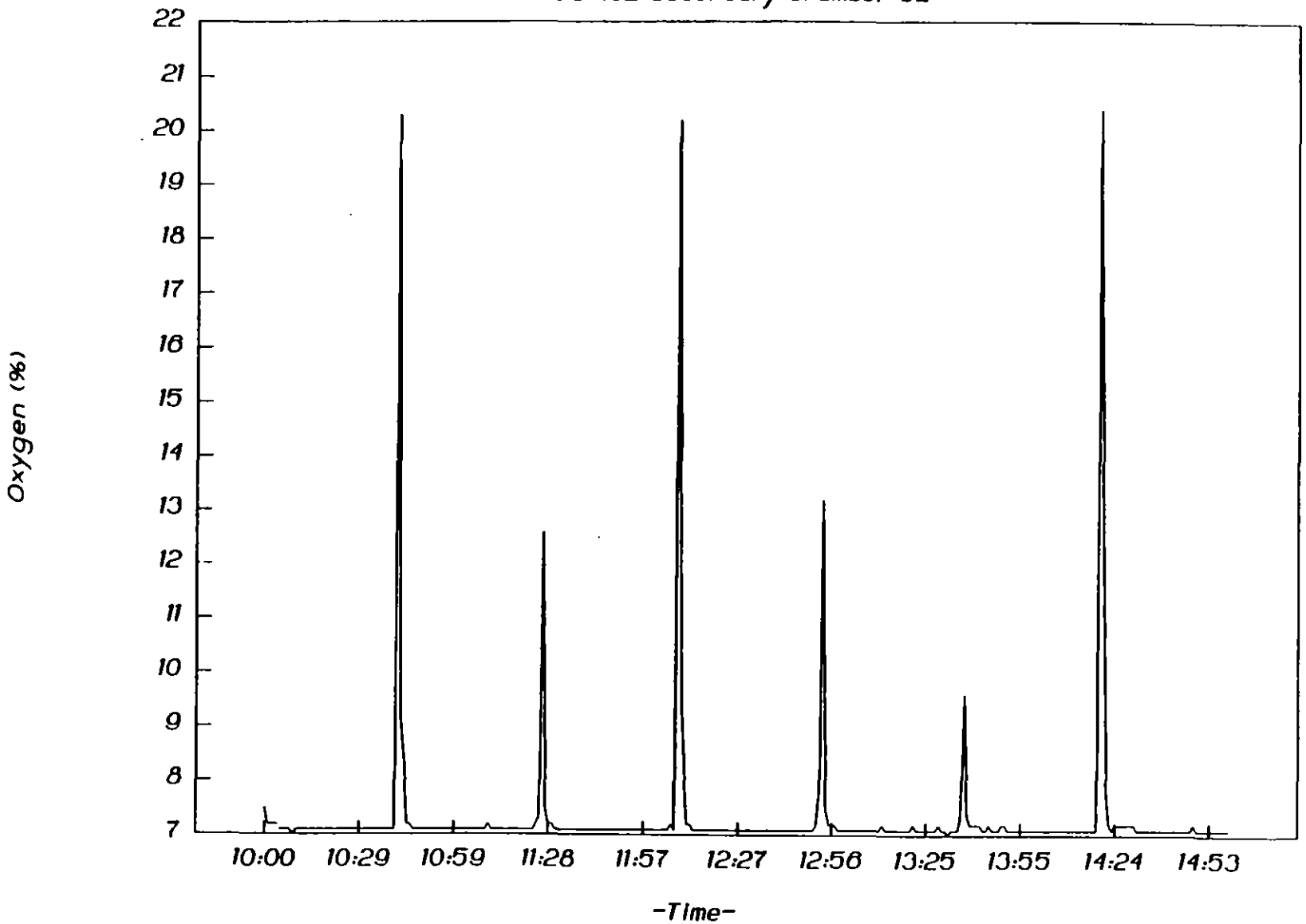

Figure 5-2

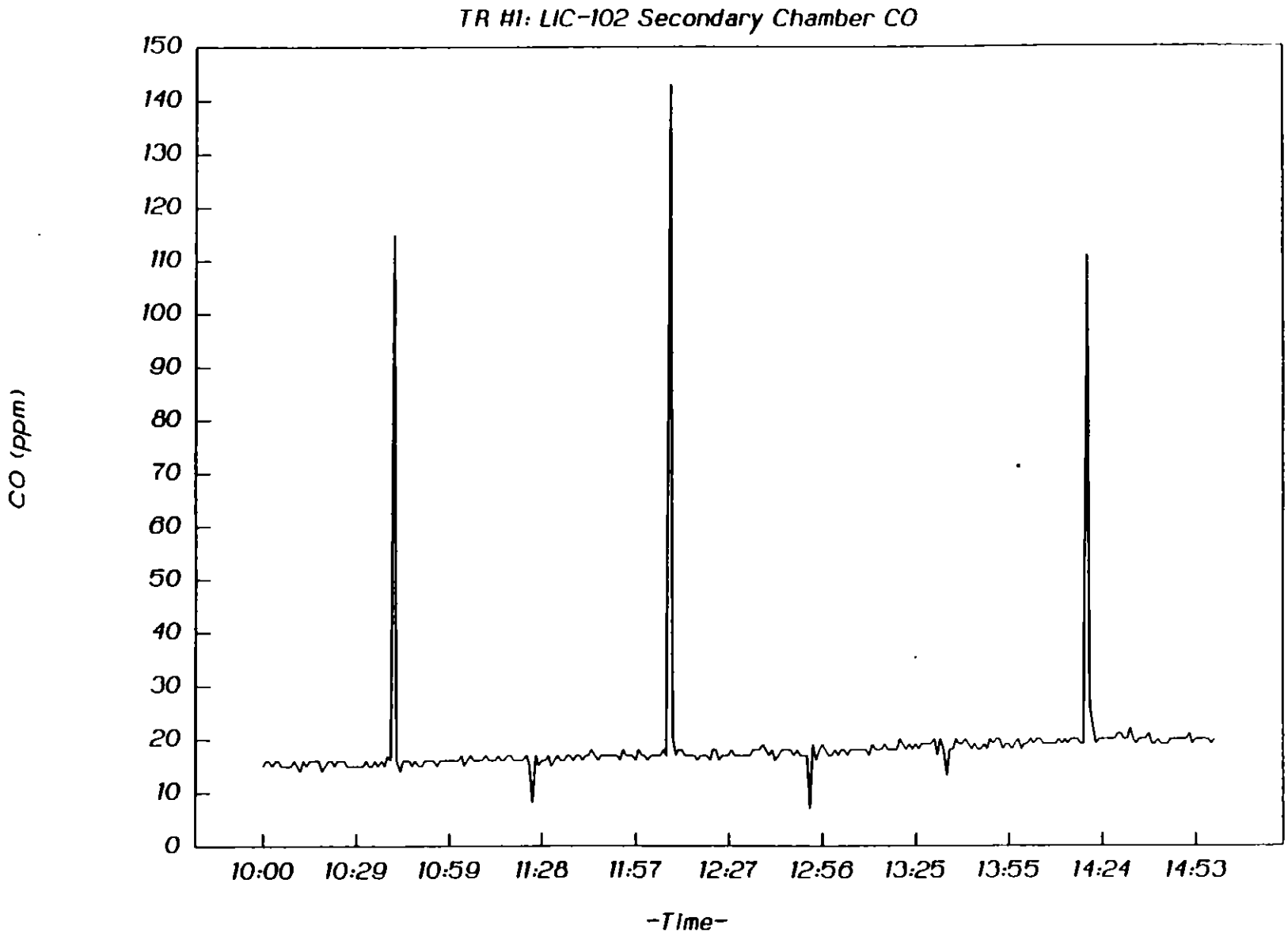
TR H1: LIC-102 Secondary Chamber CO
CO (ppm)
150
140
130
120
110
100
90
80
70
60
50
40
30
20
10
0
10:00
10:29
10:59
11:28
11:57
12:27
12:56
13:25
13:55
14:24
14:53
-Time-

Figure 5-3

TR #1: LIC 102 Exhaust Temp

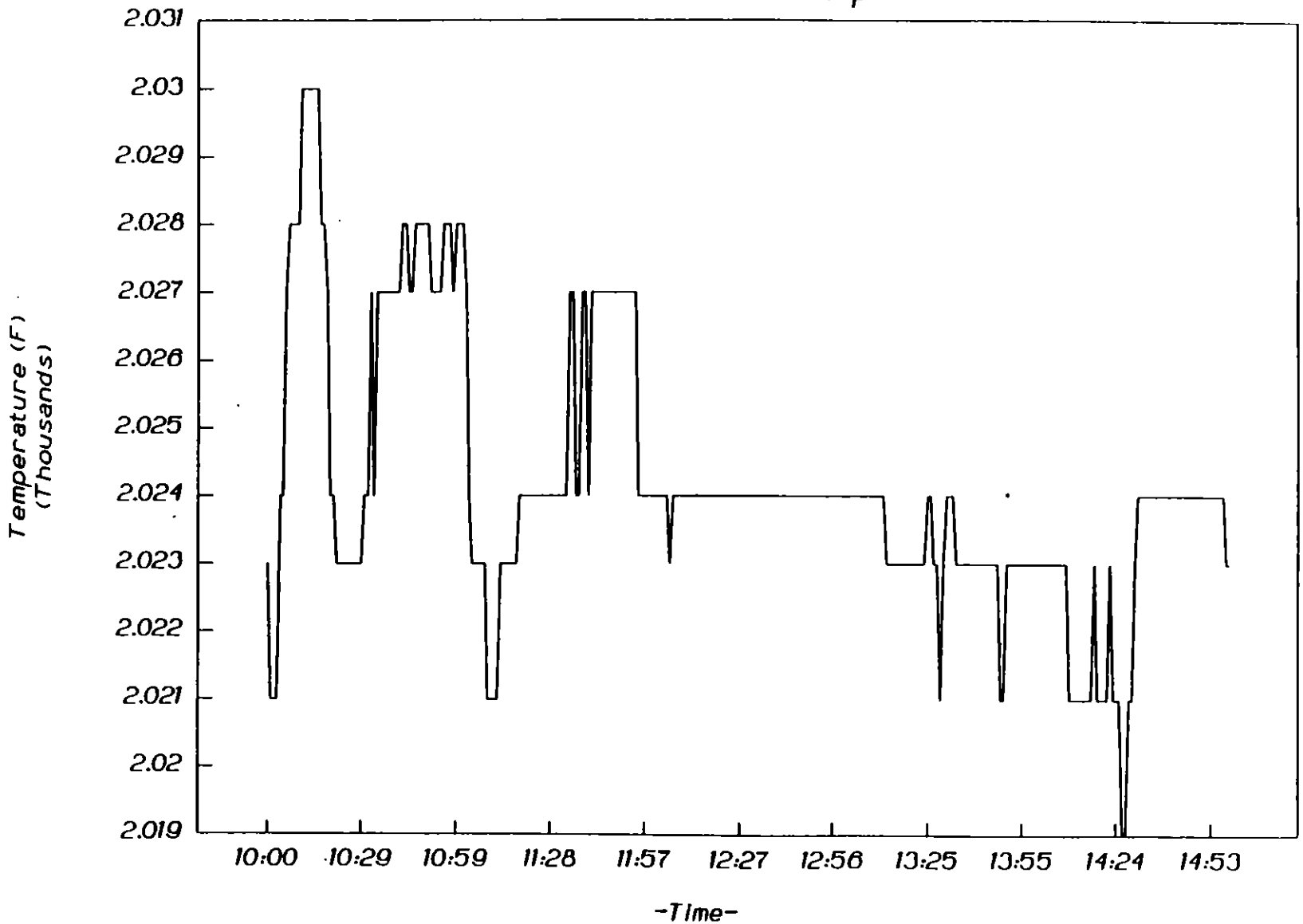

Figure 5-4

TR #1: LIC-101 Agent Feed

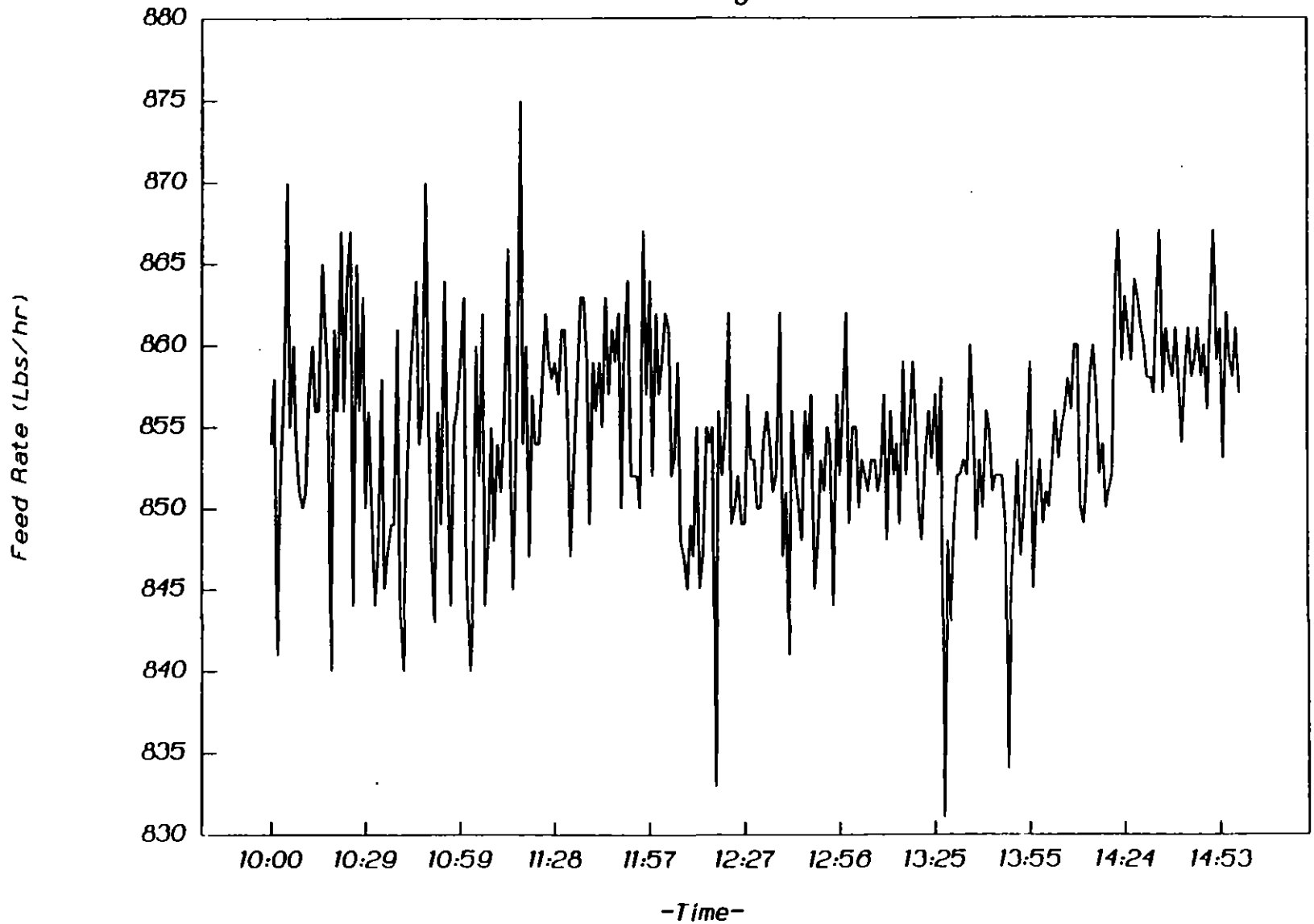

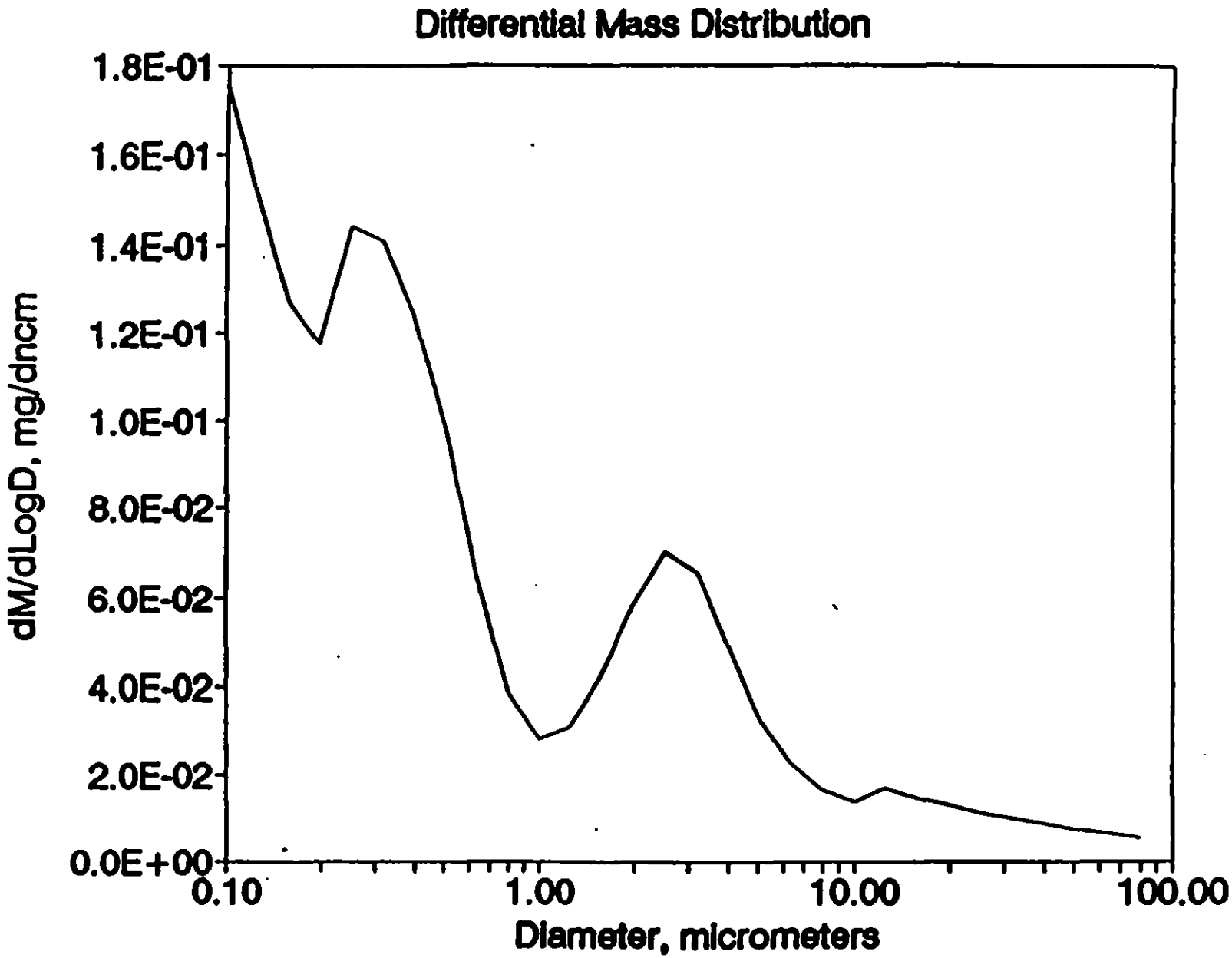

FIGURE 5-5. DIFFERENTIAL MASS SIZE DISTRIBUTION FOR LIC HD TEST RUNS 1 THROUGH 4

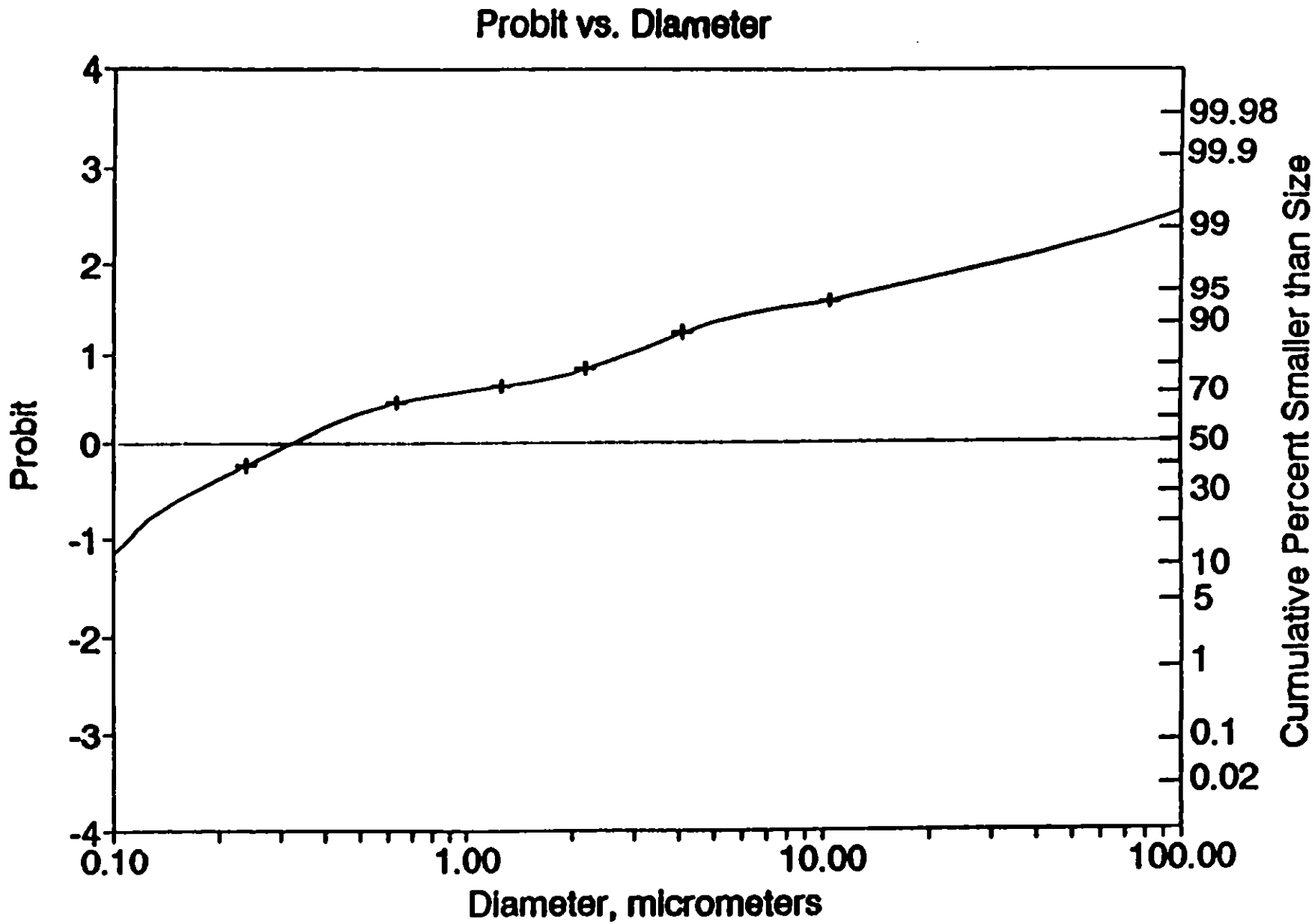

FIGURE 5-6. PARTICLE SIZE DISTRIBUTION ON CUMULATIVE PERCENT BY MASS SMALLER THAN SIZE FOR LIC HD TEST RUNS 1-4

6.0 QUALITY ASSURANCE AND QUALITY CONTROL

6.1 BACKGROUND

Assuring valid results in a sampling and analysis program of the type carried out here requires that a thorough quality assurance/quality control (QA/QC) program be followed. Such a QA/QC program was followed in all laboratory functions that pertained to the chemical analyses performed in this program. Typical QA/QC methods are instrument and sampling-system calibrations, initial and continuing instrument-calibration verifications, sample preservation and identification, replicate samples and analyses, analysis of blank samples, matrix spikes, and surrogates (where appropriate), and maintaining complete chain-of-custody documentation for all samples. Details regarding the QA/QC programs implemented by each participant can be found in Appendix G (Southern Research Institute (SRI) Analytical Test Plan). Results of the QA/QC activities are provided in several other appendices and are summarized below.

As a routine QA/QC procedure, the laboratory analyzed both blank and spiked samples. The blank samples included method blanks (laboratory reagents), field blanks, and trip blanks. Blanks were prepared according to the appropriate methods and procedures. An extraction blank was prepared for each day of extractions. A blank was analyzed each day after the daily calibration check and before the analysis of samples for volatile organics. The spiked samples consisted of matrix spikes, matrix spike duplicates, and spikes according to Environmental Protection Agency (EPA)-certified methods appropriate for the specific analytes that were determined and quantified in this work. The blank samples were used to detect any contamination that may have been introduced in the field or the laboratory and to establish background values that could be used to adjust or correct routine analytical results.

Matrix-spiked and duplicate matrix-spiked samples were also prepared by the applicable methods. Each process sample matrix (water, caustic, liquor brine) had associated with it a matrix spike and a matrix spike duplicate that was prepared from one of the sets of samples. The matrix spikes were used to check the performance and the recovery efficiencies of the various analytical methods used in this work. The post-test process samples from Test Run 3 were used for preparing most process-sample matrix spikes and matrix spike duplicates. The matrix spike and matrix spike duplicate analyses were performed in connection with the determinations of volatile organics, semivolatile organics, Polychlorinated dibenzo-p-dioxins/Polychlorinated dibenzo furans (PCDD/F), and metals. Also, internal standards and surrogate standards were used in all organics analyses. Moreover, the reagents used to prepare the Method 5 Acid Train (M5AT) were spiked with chloride at three levels to measure recovery, and the Modified Method 5s (MM5s) were spiked with one dioxin and two other chlorinated compounds prior to sampling to monitor train retention. In addition, blank MM5s, M5ATs, and Multiple Metals Trains (MMTs) that were open to ambient air were assembled and then disassembled. After rinsing these trains and collecting the rinses, all extracts and components (filter, sorbent, etc.) were sent to the laboratory for analysis. The resulting information was used to identify contamination associated with the recovery operation. The blank data were reported with the sample sheets; spikes and duplicates were as indicated below. The appendices covering each type of sample relate which blanks and standards were analyzed with each sample.

The precision of the analyses was measured by preparing and analyzing several

kinds of spikes and duplicates for all sample types. The surrogates and analytes used for spiking were chosen from among those that were suggested in the SW-846 methods. For each method and matrix, the difference between the two duplicate analyses (matrix spike and matrix spike duplicate) results was used to estimate the precision of the analysis, and the average spike recovery was used to estimate the bias of the analysis. The surrogate spikes, which were authentic standards that were added to every sample prior to sample processing and analysis, were used to provide QC on every sample by constantly monitoring for unusual matrix effects and gross sample-processing errors. The surrogate standards were compounds that were not likely to be found in the matrix.

Volatile organic analysis (VOA) and volatile organic sampling train (VOST) samples were shipped to SRI promptly enough that the analyses of the samples could be completed within two weeks of sample collection. Other samples were shipped as rapidly as Department of Transportation (DOT) regulations allowed and were analyzed promptly. Samples that required refrigeration were shipped in ice chests and packed with blue ice to maintain a temperature of 4°C.

Even though this was not a required trial burn, chain-of-custody documentation was maintained for the samples according to the QA Project Plan included in the Trial Burn Test Plan (Appendix G). These procedures required that samples be recorded on sample-custody tracking sheets and that these sheets be transferred, signed, and dated when samples were transferred from one individual to another. This documentation is contained in Appendix A. The procedures also required that the custodian maintain possession of the samples or that they be stored under secure conditions.

6.2 SEMIVOLATILE ORGANIC ANALYSIS

The stack-gas QA/QC samples included a train blank that consisted of an entire MM5; field blanks that consisted of a filter, an XAD-2 sorbent trap, and all reagents required for the train assembly; an XAD-2 trip blank; and a laboratory blank for each matrix and for each day that samples were prepared.

The XAD-2 sorbent was treated with methylene chloride according to SW-846 Method 0010. After the extraction, the methylene chloride was analyzed by gas chromatograph/mass spectrometry (GC/MS) to verify that the sorbent was contaminant-free prior to preparing the sorbent cartridges.

Before being shipped to the field, the XAD-2 sorbent traps were spiked with 114 μg of 2,4-dichlorophenol-d_3, 205 μg of 1,2,4-trichlorobenzene-d_3, and 2 ng of 2,3,7,8-tetrachlorodibenzo-p-dioxin-$^{37}Cl_4$. These spikes were used to indicate the recovery of chlorinated acids, neutrals, and dioxins from the sample trains.

The recoveries for the MM5 semivolatile field spikes are given in Table 6-1. The field blank sample exhibited a low recovery (12%) for 1,2,4-trichlorobenzene-d_3. Recoveries of the first three extraction surrogates were also low, indicating that losses during sample concentration may have occurred. All other recoveries ranged from 42% to 138% for the field spikes.

Recoveries of the spikes used to quantitate extraction efficiencies for semivolatile compounds from the MM5 trains are indicated on the data sheets in Appendix J, along with similar information for process liquids and slag samples. Surrogates were not spiked into the fuel oil samples because of the large dilution required.

Most surrogate recoveries were within acceptable limits. However, several samples yielded low recoveries of one or more surrogates. Recoveries of the acid surrogates in the caustic samples were very low due to the extremely high pH of the caustic which caused degradation of the acidic compounds. The most volatile acid surrogate (2-fluorophenol) yielded very low recoveries in all of the MM5 train samples and some of the process liquids samples (scrubber liquor and brine). Spiking errors accounted for low base-neutral surrogates recoveries in Lab Blank #4.

Matrix spike and matrix spike duplicate results for the process liquids are also listed in Appendix J. Recoveries were very low for the acid matrix spikes in the caustic samples. The extremely high pH of these samples caused degradation of the surrogate and matrix spike compounds.

Table 6-2 shows the concentrations of semivolatile compounds found in the process sample blanks. Table 6-3 indicates levels of target compounds found in the blanks for the MM5. Several of the laboratory and MM5 blanks contained significant levels of phthalates. These compounds are common plasticizers and although efforts are made to reduce contamination some can be expected. The unusually high levels in lab blanks 1 and 2 indicate that any bis(2-ethylhexyl)phthalate in associated samples is questionable.

6.3 VOLATILE ORGANIC ANALYSIS

The QC samples for the volatiles analyses included blanks (each 12 hour shift), surrogates (each sample), and matrix spike/matrix spike duplicates (each matrix except VOST). The VOST tubes were conditioned for a minimum of 16 hours at 180°C under a flow of pre-purified nitrogen. Two sets of tubes from each batch were then analyzed to confirm that no interfering compounds were present. The tubes were then sealed and stored at 4°C or below, until used.

Internal standards and surrogates were added to all samples immediately prior to analysis by GC/MS. The volatile internal standards included the following, added at 0.25 μg to VOST tubes, condensates, and aqueous process samples:

Bromochloromethane
1,4-Difluorobenzene
Chlorobenzene-d_5

Volatile surrogates were added to all samples prior to analysis at a level of 0.25 μg. These compounds included the following:

Toluene-d_8
1,2-Dichloroethane-d_4
4-Bromofluorobenzene

The acceptable range of recoveries for the surrogates was assumed to be 50%-150%. Actual recoveries for surrogates from aqueous process samples and condensates were as follows:

1,2-Dichloroethane-d_4	76%-114%
Toluene-d_8	99%-110%
4-Bromofluorobenzene	86%-115%

The surrogate recoveries for each sample are given in Appendix I. VOST Audit results are presented in Table 6-4.

Matrix spike and matrix spike duplicate results for aqueous process samples are given in Tables 6-5 through 6-8. All recoveries were within acceptable limits except for the caustic samples. The extremely high pH of these samples caused degradation of the surrogate materials. The precision as determined by the relative differences of the matrix spike and matrix spike duplicates agreed to within 21% for all materials.

6.4 METALS ANALYSIS

All data were judged to be representative based on the quality control data obtained. This quality control data included analyte recoveries, train performance, sample tracking and custody documentation. All samples that were successfully collected and received were analyzed, and no losses were experienced in laboratory preparation or analysis.

As a QC protocol, the laboratory analyzed blank, duplicate and spiked samples of each matrix. To determine matrix effects on the metal analyses, the process samples from Liquid Incinerator System (LIC) Test Run #3 were spiked with each of the seventeen metals analyzed. Target limits for metal recoveries were 70-130%.

The metals spiking results for the process samples are given in Tables 6-9 through 6-13. The MMT QC analyses are reported in Tables 6-14 and 6-15. Spiked metals recoveries for the slag toxicity characteristic leachate procedure (TCLP) analyses are presented in Table 6-16. Metal matrix spikes and duplicate analyses were within acceptable limits for most sample matrices. Exceptions and possible explanations for poor recoveries are addressed for each sample matrix below.

Spike recoveries for process water QC samples were very good for 15 of the 17 metals analyzed with relative percent differences from 0 to 4%. Silver recoveries were low due to the formation of insoluble silver chloride. Thallium recoveries were slightly low, which could be due to higher detection limits in the samples. Even though recoveries of thallium and silver were low, there was good consistency as indicated by the low relative percent differences.

Analysis of scrubber brine digestates presented problems for inductively coupled plasma atomic-emission spectrometry (ICP) and graphite furnace analysis. Digestates required a fortyfold dilution for analysis by graphite furnace for thallium. Less dilute solutions coated the furnace and contact rings with a white powdery substance which prevented electrical contact. However, this high dilution raised the method detection limit to 0.4 μg/mL, well above the spike level of 0.05 μg/mL.

The laboratory also experienced problems with the analysis of scrubber brine digestates by ICP. Salt deposits formed in the ceramic plasma torch insert, completely blocking the flow of analyte from the spray chamber to the plasma. Samples were diluted by 50% with deionized water for analysis. The poor precision demonstrated for the scrubber brine spiked and duplicate analyses was due to the high solids content of the samples, which caused the insert to become partially clogged then unclogged during the analysis.

Scrubber liquor spike recoveries were within the target range with excellent precision for each element analyzed except zinc. The high zinc recovery for the matrix spike duplicate indicates possible contamination during sample preparation.

Sample preparation and analysis of the caustic process samples presented problems similar to scrubber brine analysis. The very high level of caustic present in the samples required modification of the digestion procedure and sample dilution volumes. Nitric acid was added to the 50 mL aliquots of samples until the pH was acidic. Due to the energetic reaction upon addition of acid, even while cooling the mixture in an ice water bath, some loss of sample and analyte may have occurred. Caustic samples required dilution to twice the usual volume to prevent precipitation of sample and analyte from solution before analysis.

Similar to scrubber brine digestates, caustic samples required a forty fold dilution for analysis for thallium by graphite furnace. Without the dilution the furnace and contact rings were coated with a white powdery substance which prevented electrical contact for furnace heating. As described earlier, the high dilution raised the method detection limit to 0.4 μg/mL which was well above the spike level.

Caustic digestates caused problems similar to the scrubber brines during ICP analysis. The poor recoveries and large relative percent differences demonstrated for the caustic QC spiked and duplicate analyses arise from the high solids content of the samples, with the insert becoming partially clogged, then completely unclogged during sample analysis.

Matrix spike and duplicate analysis for fuel oil samples produced acceptable recoveries with good precision for most elements. Low barium and lead spike recoveries are attributable to high sulfur content in the samples. Recoveries for chromium are low but consistent. If analytical results were adjusted for the poor recoveries, the chromium concentration for each fuel oil sample would be <0.05 μg/mL. If analytical results were adjusted for the low selenium recoveries, the selenium concentration in each fuel oil sample would be <0.10 μg/mL. The relative percent difference was high for Se, Sn, Sb, and Ag. Poor recovery of Se and Sb probably caused the largest differences. The recovery of Sn and Ag was higher but still erratic. Tin had a spectral interference and had to be qualified at an alternative wavelength. Silver in fuel oil from previous studies also gave poor reproducibility.

QC analysis for MMT samples involved spiking mock sample solution with each of the twenty metals determined before preparation and analysis. MMT front half QC analysis produced excellent recoveries with good precision for all elements except silver, phosphorus, mercury and thallium. Silver recoveries are low due to the formation of insoluble silver chloride. The high phosphorus recoveries are an indication of phosphorus contamination from detergent. Mercury and thallium recoveries are apparently high due to contamination during sample preparation. There were no measurable levels of mercury or thallium in any MMT front half samples. The bias indicated by the QC results would have caused any positive results for these two metals to be overstated. Back half MMT QC analysis gave good recoveries for all twenty elements with excellent precision.

Matrix spike and duplicate analysis of the slag TCLP liquid produced recoveries within the target range with good precision for most of the elements analyzed. Silver recoveries were low due to the formation of insoluble silver chloride.

The concentration of chromium in the sample was too high for meaningful spike recovery. High spike recoveries indicate a high bias for selenium, thallium and antimony. Selenium and thallium were not detected in the slag TCLP extract. Therefore, the possible overstatement of any presence of these analytes is not significant. Antimony was detected in the extract. However, if results are modified for matrix spike recoveries, antimony is still well above the detection limit. No selenium, lead, tin, or beryllium was detected in the TCLP liquid. Nickel was present at very low levels near the detection limit. The high variance found for the spike recoveries of these elements does not significantly affect the analytical results.

6.5 HCl ANALYSIS

M5AT matrix spike and matrix spike duplicate samples were run for each type of matrix (NaOH, H_2O, and H_2SO_4) for quality control. The results are given in Tables 6-17 through 6-19.

Matrix spike/matrix spike duplicate samples for each process liquid type (fuel oil, brine, scrubber liquor, caustic, and process water) were analyzed for quality control. Results are reported in Tables 6-20 through 6-24.

Blind spike results are presented in Table 6-25.

6.6 DIOXIN

Before being shipped to the field, the XAD-2 sorbent traps were spiked with 2 ng of $^{37}Cl_4$-2,3,7,8-tetrachlorodibenzo-p-dioxin. These spikes were used to indicate the recovery of dioxins from the sample trains.

The PCDD/F analysis used several cleanup steps, and labeled standards were used to measure recoveries. An additional aliquot of $^{37}Cl_4$-2,3,7,8-TCDD as a cleanup-recovery standard was added to the dioxin fraction after extraction but prior to PCDD/F cleanup. Immediately before the analysis step, the labeled recovery standards were added. Thus, the quantification of PCDD/F was based on the standards spiked prior to extraction.

The recoveries of $^{37}Cl_4$-2,3,7,8-TCDD (i.e., the field spike-recovery standard and cleanup standard) for MM5 samples are given in Table 6-26. Generally, good recoveries were obtained for this compound, which had been spiked onto the XAD-2 resin in the MM5 tubes. Low recoveries of $^{37}Cl_4$-2,3,7,8-TCDD and the isotope dilution standards were obtained for the blank train samples (V05243 and V05236) and Test Run 1 water blank (V05381). All column cleanup fractions from the blank train filter and front wash (V05233) were analyzed. None of the fractions appeared to contain significant amounts of the isotope dilution standards. This may have occurred from loss of part of the samples during preparation. However, recovery for the field blank was above 60%. The field blank was used in correcting stack gas concentration. The low recovery of around 10% to 30% in the front and back of the train from Test Run 1 may have affected the detection limits attainable for this sample.

Table 6-27 indicates the total PCDDs/Fs found in the MM5 blanks (both laboratory and field generated). No tetrachlorodibenzodioxin (TCDD) or tetrachlorodibenzofuran (TCDF) was found and the amount of other congeners found had little effect on toxicity equivalency of actual samples.

The results for the matrix spike and matrix spike duplicate for each process sample are given in Tables 6-28 through 6-32 and in Appendix H. The recovery of each component was good, and the relative difference between the matrix spike and matrix spike duplicate for each compound was generally less than 20%, which was considered good.

The recoveries of isotope dilution standards spiked into the samples prior to extraction were generally good. As discussed above, some low recoveries were obtained for MM5 samples. Data are presented in Appendix H. Even when the recoveries of isotopically labeled PCDD/F surrogates fall outside the accepted range (40-120%) the calculated concentrations of target analytes are correct because the calculations of target analytes are based upon the amount of their isotopically labeled surrogates present in the sample. The daily continuing calibration for target PCDD/F analytes generally met the acceptance criteria.

6.7 QA/QC SUMMARY

The results of the QA/QC samples indicate that sample collection and analysis were performed in adherence to method criteria. Spike recoveries were adequate in most cases.

A continuous emission monitor (CEM) audit was conducted prior to the start of the test runs. In addition, a VOST audit was conducted prior to the trial burn. The results are contained in Table 6-4.

Included in the appendices (A, H, I, J, K and M) are lists of reagents, suppliers, and lot numbers for the chemicals.

TABLE 6-1

RECOVERIES OF 10J RESIN FIELD SPIKES

Sample Description		Surrogate 1			Surrogate 2		
		µg Spiked	µg Found	% Recovery	µg Spiked	µg Found	% Recovery
Trip Blank	H01714	114	72.2	63	205	270	132
Field Blank Resin	H01715	114	48.7	43	205	25.4	12
Blank Train Resin	H01879	114	157	138	205	283	138
Run 1 Train Resin	H01880	114	124	109	205	199	97
Run 2 Train Resin	H01883	114	128	112	205	213	104
Run 3 Train Resin	H01881	114	58.8	52	205	86.5	42
Run 4 Train Resin	H01885	114	111	97	205	98.7	48

Surrogate 1 = 1,2-Dichlorophenol-d^3
Surrogate 2 = 1,2,4-Trichlorobenzene-d^3

TABLE 6-2

SEMIVOLATILE RESULTS SUMMARY
LABORATORY BLANKS

Blank ID	Matrices	Compound	Concentration, µg/L
Lab Blank 1	(TR1: Brine, Caustic, Scrubber, Process Water)	Bis(2-ethylhexyl)phthalate	287
Lab Blank 2	(TR2: Brine & Scrubber) (TR3: Brine & Scrubber)	Bis(2-ethylhexyl)phthalate	1390
Lab Blank 3	(TR2: Process Water, Caustic Post Test) (TR3: Process Water & Caustic Pre Test)	Bis(2-ethylhexyl)phthalate	10.9
Lab Blank 4	(TR2: Caustic Pre Test) (TR3: Caustic Post Test)	Di-n-octylphthalate	67.2
Lab Blank 5	(TR4: Brine & Scrubber)	--	ND[a]
Lab Blank 6	(TR4: Scrubber Post Test)	Bis(2-ethylhexyl)phthalate Di-n-octylphthalate	49.3 30.7
Lab Blank 7	(TR4: Scrubber Post Test)	Bis(2-ethylhexyl)phthalate	68.4
Lab Blank	(Fuel Oil)	--	ND

[a]ND = Not detected. Detection limits for Bis(2-ethylhexyl)phthalate and Di-n-octylphthalate are 40 µg/L in lab blank and 10 x 10^6 µg/mL in fuel oil blank.

TABLE 6-3

SEMIVOLATILE QUALITY CONTROL ANALYSES

Sample Description		Target Compound	Amount, μg
Lab Extraction Blank 1	H01708	Benzyl alcohol	1740
		2-Methylphenol	916
		Bis(2-ethylhexyl)phthalate	21.8
Lab Extraction Blank 2	H01726	2-Methylphenol	1510
Water Blank 1	H01725	Bis(2-ethylhexyl)phthalate	29.2
		Di-n-octylphthalate	67.1
Field Blank Filter and Solvent Blank	H01713	Benzyl alcohol	1010
		Bis(2-ethylhexyl)phthalate	166
Field Blank Resin and Water Blank	H01715	Benzyl alcohol	1020
		Benzoic acid	98
		Bis(2-ethylhexyl)phthalate	899
Trip Blank Resin	H01714	Benzyl alcohol	2210
		Bis(2-ethylhexyl)phthalate	11.3
Blank Train			
Filter and Front Wash	H01709	Benzyl alcohol	286
		Bis(2-ethylhexyl)phthalate	89.8
Resin and Back Wash	H01879	Benzyl alcohol	360
		Bis(2-ethylhexyl)phthalate	118
		3-Methylphenol	12.1

TABLE 6-4

VOST AUDIT RESULTS

Compound	Sample Concentration (ng/L)				
	1	2	3	4	Average
Bromomethane	375	470	441	366	413
Trichlorofluoroethane (UNK #1)	450	455	394	456	439
2-Butanone	271	285	281	318	289
1,2-Dichloroethane	694	746	749	741	733
Trichloroethane	1342	1391	1408	1377	1380
1,1-Dibromoethane (UNK #2)	875	884	910	956	907

TABLE 6-5

VOA QC ANALYSIS
TEST RUN 3 PROCESS WATER PRE TEST

Compound	Added Spike Concen. (μg/L)	Sample Concen. (μg/L)	Matrix Spike Spiked Sample Concen. (μg/L)	Matrix Spike Percent Recovery	Matrix Spike Dupl. Spiked Sample Concen. (μg/L)	Matrix Spike Dupl. Percent Recovery	Relative Percent Difference	SW-846 % Recovery Range
1,2-dichloroethane-d_4 SURR1	50	NA	55	110	55.8	112	1.8	76 -114
Toluene-d_8 SURR2	50	NA	47.9	95.8	49.6	99.2	3.5	88 -110
4-bromofluorobenzene SURR3	50	NA	49.4	98.8	49.6	99.2	0.4	86 -115
1,1-dichloroethane	50	ND	58.6	117	71.9	144	21	50.5-150
Benzene	50	ND	41.2	82.4	47.1	94.2	13	64 -136
Trichloroethane	50	ND	49	98	55.8	112	13	66.5-134
Toluene	50	ND	46.4	92.8	52.8	106	13	74.5-126
Chlorobenzene	50	ND	42.2	84.4	48.9	97.8	15	66 -134

NA = Not Applicable.
ND = Not detected (below detection limit).

L:ICHD6.V51

TABLE 6-6

VOA QC ANALYSIS
TEST RUN 3 LIQUOR PRE TEST

Compound	Added Spike Concen. (μg/L)	Sample Concen. (μg/L)	Matrix Spike Spiked Sample Concen. (μg/L)	Matrix Spike Percent Recovery	Matrix Spike Dupl. Spiked Sample Concen. (μg/L)	Matrix Spike Dupl. Percent Recovery	Relative Percent Difference	SW-846 % Recovery Range
1,2-dichloroethane-d_4 SURR1	50	NA	56.5	113	56.2	112	0.89	76 -114
Toluene-d_8 SURR2	50	NA	48.6	97.2	48.2	96.4	0.83	88 -110
4-bromofluorobenzene SURR3	50	NA	47.4	94.8	48.1	96.2	1.5	86 -115
1,1-dichloroethane	50	ND	75.1	150	78.3	157	4.6	50.5-150
Benzene	50	ND	46.5	93	46.3	92.6	0.43	64 -136
Trichloroethane	50	ND	54.8	110	56.8	114	3.6	66.5-134
Toluene	50	ND	50.4	101	50	100	1	74.5-126
Chlorobenzene	50	ND	48.3	96.6	47.9	95.8	0.83	66 -134

NA = Not Applicable.
ND = Not detected (below detection limit).

LICHD6.W51

TABLE 6-7

VOA QC ANALYSIS
TEST RUN 3 BRINE PRE TEST

Compound	Added Spike Concen. (μg/L)	Sample Concen. (μg/L)	Matrix Spike Spiked Sample Concen. (μg/L)	Matrix Spike Percent Recovery	Matrix Spike Dupl. Spiked Sample Concen. (μg/L)	Matrix Spike Dupl. Percent Recovery	Relative Percent Difference	SW-846 % Recovery Range
1,2-dichloroethane-d_4 SURR1	50	NA	59.2	118	53.2	106	11	76 -114
Toluene-d_8 SURR2	50	NA	49.9	99.8	46.4	92.8	7.3	88 -110
4-bromofluorobenzene SURR3	50	NA	48.2	96.4	48.1	96.2	0.21	86 -115
1,1-dichloroethane	50	ND	67.7	135	64.7	129	4.5	50.5-150
Benzene	50	ND	47	94	43.9	87.8	6.8	64 -136
Trichloroethane	50	ND	56.2	112	51.6	103	8.4	66.5-134
Toluene	50	ND	51.6	103	49.3	98.6	4.4	74.5-126
Chlorobenzene	50	ND	48.5	97	45.7	91.4	5.9	66 -134

NA = Not Applicable.
ND = Not detected (below detection limit).

LICHD6.V51

TABLE 6-8

VOA QC ANALYSIS
TEST RUN 3 CAUSTIC PRE TEST

Compound	Added Spike Concen. (μg/L)	Sample Concen. (μg/L)	Matrix Spike Spiked Sample Concen. (μg/L)	Matrix Spike Percent Recovery	Matrix Spike Dupl. Spiked Sample Concen. (μg/L)	Matrix Spike Dupl. Percent Recovery	Relative Percent Difference	SW-846 % Recovery Range
1,2-dichloroethane-d_4 SURR1	50	NA	57	114	55.7	111	2.7	76 -114
Toluene-d_8 SURR2	50	NA	46.2	92.4	51.4	103	11	88 -110
4-bromofluorobenzene SURR3	50	NA	46.6	93.2	49.8	99.6	6.6	86 -115
1,1-dichloroethane	50	ND	55.4	111	53.8	108	2.7	50.5-150
Benzene	50	ND	36.4	72.8	38.2	76.4	4.8	64 -136
Trichloroethane	50	ND	44.1	88.2	45.3	90.6	2.7	66.5-134
Toluene	50	ND	42.5	85	43.6	87.2	2.6	74.5-126
Chlorobenzene	50	ND	37.8	75.6	39.7	79.4	4.9	66 -134

NA = Not Applicable.
ND = Not detected (below detection limit).

TABLE 6-9

METALS QC TABLE
PROCESS WATER POST TEST
TEST RUN 3
SAMPLE NO. 10J-4-140

Element	Digestion Blank Conc., µg/mL	Sample Conc., µg/mL	Sample Duplicate Conc., µg/mL	Spike Added, µg/mL	Matrix Spike Conc., µg/mL	Matrix Spike % Recovery	Matrix Spike Duplicate Conc., µg/mL	Matrix Spike Duplicate % Recovery	Rel. % Dif.
Arsenic	<0.05	<0.05	<0.05	2	2.11	106	2.03	102	4
Selenium	<0.05	<0.05	<0.05	2	2.07	104	2.06	103	1
Cadmium	<0.02	<0.02	<0.02	0.5	0.499	100	0.513	103	3
Chromium	<0.02	<0.02	<0.02	0.5	0.423	85	0.416	83	2
Lead	<0.05	<0.05	<0.05	2	2.04	102	2.06	103	1
Nickel	<0.05	<0.05	<0.05	1	1.00	100	1.00	100	0
Tin	<0.10	<0.10	<0.10	1	1.02	102	1.03	103	1
Thallium	<0.010	<0.010	<0.010	0.1	0.0607	61	0.0625	62	1
Antimony	<0.10	<0.10	<0.10	1	0.97	97	0.94	94	3
Zinc	<0.05	0.059	<0.05	1	1.02	96	0.99	93	3
Cobalt	<0.05	<0.05	<0.05	1	1.05	105	1.03	103	2
Barium	<0.10	<0.10	<0.10	1	1.06	106	1.03	103	3
Vanadium	<0.02	<0.02	<0.02	1	1.03	103	1.02	102	1
Beryllium	<0.02	<0.02	<0.02	0.5	0.493	99	0.507	101	2
Copper	<0.05	<0.05	<0.05	1	1.07	107	1.03	103	4
Silver	<0.10	<0.10	<0.10	10	1.80	18	1.81	18	-
Mercury	<0.0005	<0.0005	<0.0005	0.0030	0.00266	89	0.00270	90	1

L1CHD6.W51

TABLE 6-10

METALS QC TABLE
SCRUBBER BRINE POST TEST
TEST RUN 3
SAMPLE NO. 10J-4-124

Element	Digestion Blank Conc., µg/mL	Sample Conc., µg/mL	Sample Duplicate Conc., µg/mL	Spike Added, µg/mL	Matrix Spike Conc., µg/mL	Matrix Spike % Recovery	Matrix Spike Duplicate Conc., µg/mL	Matrix Spike Duplicate % Recovery	Rel. % Dif.
Arsenic	<0.10	2.225	1.09	1	2.65	43	2.52	30	36
Selenium	<0.10	0.586	0.239	1	0.953	37	0.848	26	35
Cadmium	<0.02	0.048	0.026	0.25	0.217	86	0.208	83	4
Chromium	<0.05	0.771	0.515	0.25	1.10	132	0.990	88	40
Lead	0.157	0.275	0.278	1	1.08	81	1.07	80	1
Nickel	<0.05	0.352	0.352	0.5	0.824	94	1.06	142	41
Tin	<0.10	0.105	<0.10	0.5	0.434	66	0.479	75	13
Thallium	<0.40	<0.40	<0.40	0.05[a]	--[a]		--[a]		
Antimony	<0.10	<0.10	<0.10	0.5	0.290	58	0.405	81	33
Zinc	<0.05	0.709	0.613	0.5	1.27	112	1.75	208	60
Cobalt	<0.05	<0.05	<0.05	0.5	0.410	82	0.581	116	34
Barium	<0.10	<0.10	<0.10	0.5	0.479	96	0.373	75	25
Vanadium	<0.02	0.180	0.092	0.5	0.492	62	0.639	92	39
Beryllium	<0.02	<0.02	<0.02	0.25	0.199	80	0.199	80	0
Copper	<0.05	0.937	0.983	0.5	1.55	123	1.91	195	45
Silver	<0.10	<0.10	<0.10	0.5	0.409	82	0.431	86	5
Mercury	<0.0005	0.00232	0.00220	0.0030	0.00511	93	0.00506	91	2

[a]Analytical spike levels for Thallium are too low for recovery due to the 1:40 dilution required for graphite furnace analysis.

TABLE 6-11

METALS QC TABLE
SCRUBBER LIQUOR POST TEST
TEST RUN 3
SAMPLE NO. 10J-4-116

Element	Digestion Blank Conc., µg/mL	Sample Conc., µg/mL	Sample Duplicate Conc., µg/mL	Spike Added, µg/mL	Matrix Spike Conc., µg/mL	Matrix Spike % Recovery	Matrix Spike Duplicate Conc., µg/mL	Matrix Spike Duplicate % Recovery	Rel. % Dif.
Arsenic	<0.10	<0.10	<0.10	2	2.33	117	2.51	126	7
Selenium	<0.10	<0.10	<0.10	2	2.46	123	2.48	124	1
Cadmium	<0.02	<0.02	<0.02	0.5	0.555	111	0.593	119	7
Chromium	<0.05	0.056	0.075	0.5	0.583	105	0.621	113	7
Lead	<0.05	<0.05	0.056	2	2.266	113	2.400	120	6
Nickel	<0.05	0.065	0.064	1	1.17	109	1.28	121	10
Tin	<0.10	<0.10	<0.10	1	1.06	106	1.13	113	6
Thallium	<0.010	<0.010	<0.010	0.1	0.0684	68	0.0686	69	1
Antimony	<0.10	<0.10	<0.10	1	1.22	122	1.30	130	6
Zinc	<0.05	0.153	0.134	1	1.38	123	1.69	154	22
Cobalt	<0.05	0.170	<0.05	1	1.18	118	1.27	127	7
Barium	<0.10	<0.10	<0.10	1	1.11	111	1.12	112	1
Vanadium	<0.02	<0.02	<0.02	1	1.10	110	1.18	118	7
Beryllium	<0.02	<0.02	<0.02	0.5	0.547	109	0.581	116	6
Copper	<0.05	0.232	0.238	1	1.42	119	1.46	123	3
Silver	<0.10	<0.10	<0.10	10	7.80	78	7.65	77	1
Mercury	<0.0003	0.00049	0.00046	0.0030	0.00336	96	0.00330	94	2

LICHD6.W51

TABLE 6-12

METALS QC TABLE
CAUSTIC POST TEST
TEST RUN 3
SAMPLE NO. 10J-4-132

Element	Digestion Blank Conc., µg/mL	Sample Conc., µg/mL	Sample Duplicate Conc., µg/mL	Spike Added, µg/mL	Matrix Spike Conc., µg/mL	Matrix Spike % Recovery	Matrix Spike Duplicate Conc., µg/mL	Matrix Spike Duplicate % Recovery	Rel. % Dif.
Arsenic	0.12	<0.10	<0.10	1	0.652	65	0.460	46	17
Selenium	0.082	<0.10	<0.10	1	0.846	85	0.580	58	38
Cadmium	<0.02	<0.02	<0.02	0.25	0.179	72	0.118	47	42
Chromium	<0.05	<0.05	<0.02	0.25	<0.05	0	<0.05	0	--
Lead	0.2080	0.130	0.262	1.0	1.21	108	0.617	48	77
Nickel	<0.05	<0.05	<0.05	0.5	0.420	84	0.500	100	17
Tin	0.19	0.245	<0.10	0.5	0.278	56	0.497	99	55
Thallium	<0.40	<0.40	<0.40	0.05	--[a]		--[a]		--
Antimony	<0.10	<0.10	<0.10	0.5	<0.1	0	<0.1	0	--
Zinc	<0.05	0.390	<0.05	0.5	0.814	85	0.830	88	3
Cobalt	<0.05	<0.05	<0.05	0.5	0.270	54	0.472	84	54
Barium	<0.10	0.242	0.182	0.5	0.592	70	0.380	28	86
Vanadium	<0.02	<0.02	0.022	0.5	0.423	85	0.520	104	20
Beryllium	<0.02	<0.02	<0.02	0.25	0.193	77	0.148	59	26
Copper	<0.05	0.096	0.052	0.5	0.610	103	0.830	147	35
Silver	<0.10	<0.10	<0.10	0.5	0.446	89	<0.1	0	--
Mercury	<0.0005	0.0005	<0.0005	0.0030	0.00278	93	0.00255	85	9

[a]Analytical spike level for thallium is too low for recovery due to the 1:40 dilution required for analysis.

LICHD6.W51

TABLE 6-13

METALS QC TABLE
FUEL OIL POST TEST
TEST RUN 3
SAMPLE NO. 10J-4-145

Element	Digestion Blank Conc., µg/mL	Sample Conc., µg/mL	Sample Duplicate Conc., µg/mL	Spike Added, µg/mL	Matrix Spike Conc., µg/mL	Matrix Spike % Recovery	Matrix Spike Duplicate Conc., µg/mL	Matrix Spike Duplicate % Recovery	Rel. % Dif.
Arsenic	<0.10	<0.10	<0.10	2	1.55	78	1.66	83	6
Selenium	<0.10	<0.10	<0.10	2	1.07	54	0.637	32	51
Cadmium	<0.02	<0.02	<0.02	0.5	0.507	101	0.484	97	4
Chromium	<0.02	<0.02	<0.02	0.5	0.278	56	0.253	51	9
Lead	<0.05	<0.05	<0.05	2	0.508	25	0.452	23	8
Nickel	<0.05	<0.05	<0.05	1	1.01	101	0.980	98	3
Tin	<0.10	<0.1	<0.1	1	0.879	88	0.658	66	29
Thallium	<0.010	<0.010	<0.010	0.1	0.0958	96	0.104	104	8
Antimony	<0.10	<0.10	<0.10	1	0.566	57	0.321	32	56
Zinc	<0.05	0.090	0.086	1	0.916	83	0.917	83	0
Cobalt	<0.05	<0.05	<0.05	1	1.04	104	1.00	100	4
Barium	<0.10	<0.10	<0.10	1	<0.1	0	<0.1	0	--
Vanadium	<0.02	<0.02	<0.02	1	0.959	96	0.989	99	3
Beryllium	<0.02	<0.02	<0.02	0.5	0.557	111	0.537	107	4
Copper	<0.05	<0.05	<0.05	1	1.04	104	0.975	98	6
Silver	<0.10	<0.10	<0.10	1	0.627	63	0.848	85	30
Mercury	<0.0005	<0.0005	<0.0005	0.0030	0.00278	93	0.00282	94	1

L1CHD6.W51

TABLE 6-14

MMT METALS ANALYSIS QC
FRONT HALF

Element	Method Blank; µg/mL	Spike Added µg/mL	Matrix Spike Conc., µg/mL	Matrix Spike % Recovery	Matrix Spike Duplicate Conc., µg/mL	Matrix Spike Duplicate % Recovery	Relative % Difference
Arsenic	0.0830	0.80	0.601	75	0.689	86	14
Selenium	<0.05	0.80	0.652	82	0.73	91	10
Chromium	<0.02	0.20	0.161	81	0.173	87	7
Cadmium	<0.02	0.20	0.168	84	0.187	94	11
Lead	<0.05	0.80	0.669	84	0.748	94	11
Barium	<0.10	0.40	0.358	90	0.389	97	7
Beryllium	<0.02	0.20	0.169	84	0.183	92	9
Silver	<0.10	0.40	<0.10	*	<0.10	*	--
Tin	<0.10	0.40	0.231	58	0.311	78	29
Antimony	<0.10	0.40	0.330	83	0.382	96	15
Phosphorus	<0.10	1.00	1.452	145	1.605	161	10
Zinc	<0.05	0.40	0.346	87	0.401	101	15
Cobalt	<0.05	0.40	0.348	87	0.392	98	12
Nickel	<0.05	0.40	0.363	91	0.411	103	12
Boron	<0.10	0.40	0.230	58	0.276	69	17
Manganese	<0.02	0.20	0.176	88	0.199	100	13
Vanadium	<0.02	0.40	0.355	89	0.399	100	12
Copper	<0.05	0.40	0.349	87	0.385	96	10
Mercury	<0.002	0.008	0.020	254	0.0183	229	10
Thallium	<0.010	0.040	0.068	170	0.060	150	13

*Silver recoveries are low due to formation of insoluble silver chloride.

TABLE 6-15

MMT METALS ANALYSIS QC
BACK HALF

Element	Method Blank; µg/mL	Spike Added µg/mL	Matrix Spike		Matrix Spike Duplicate		Relative % Difference
			Conc., µg/mL	% Recovery	Conc., µg/mL	% Recovery	
Arsenic	<0.05	2.00	1.845	92	1.954	98	6
Selenium	<0.05	2.00	1.893	95	1.938	97	2
Chromium	<0.02	0.50	0.384	77	0.396	79	3
Cadmium	<0.02	0.50	0.458	92	0.482	96	4
Lead	<0.05	2.00	1.753	88	1.827	91	3
Barium	<0.10	1.00	0.913	91	0.940	94	3
Beryllium	<0.02	0.50	0.461	92	0.470	94	2
Silver	<0.10	1.00	0.864	86	1.009	101	16
Tin	<0.10	1.00	0.877	88	0.886	89	1
Antimony	<0.10	1.00	0.821	82	0.841	84	2
Phosphorus	<0.10	4.00	3.58	90	3.55	89	1
Zinc	<0.05	1.00	0.922	92	0.941	94	2
Cobalt	<0.05	1.00	0.897	90	0.889	90	0
Nickel	<0.05	1.00	0.878	88	0.891	89	1
Boron	<0.10	1.00	0.822	82	0.843	84	2
Manganese	<0.02	0.50	0.423	85	0.452	90	6
Vanadium	<0.02	1.00	0.901	90	0.908	91	1
Copper	<0.05	1.00	0.907	91	0.911	91	0
Mercury	<0.0005	0.003	0.00262	87	0.00262	87	0
Thallium	<0.010	0.10	0.0794	79	0.0808	81	3

LTCHD6.W51

TABLE 6-16

SLAG TCLP EXTRACT METALS QC TABLE
SAMPLE NO. 10J

Element	TCLP Blank Conc., µg/mL	Sample Conc., µg/mL	Sample Duplicate Conc., µg/mL	Spike Added, µg/mL	Matrix Spike Conc., µg/mL	Matrix Spike % Recovery	Matrix Spike Duplicate Conc., µg/mL	Matrix Spike Duplicate % Recovery	Relative % Difference
Arsenic	<0.10	0.13	0.13	2	1.92	90	1.76	82	8
Selenium	<0.10	<0.10	<0.10	2	3.62	181	1.79	90	67
Cadmium	<0.02	<0.02	<0.02	0.5	0.46	92	0.47	94	2
Chromium	<0.05	99.3	97.0	0.5	97.4	--[a]	99.1	--[a]	--
Lead	<0.05	<0.05	<0.05	2	1.47	74	1.94	97	27
Nickel	<0.05	0.09	0.09	1	0.84	75	1.05	96	24
Tin	<0.10	<0.10	<0.10	1	1.11	111	0.95	85	26
Thallium	<0.01	<0.01	<0.01	0.1	0.146	146	0.130	130	12
Antimony	<0.10	1.24	1.16	1	2.91	167	1.68	44	116
Zinc	<0.05	0.07	0.07	1	1.00	93	1.05	98	5
Cobalt	<0.05	0.05	<0.05	1	1.06	106	0.90	90	16
Barium	0.42	<0.10	<0.10	1	0.85	85	0.97	97	13
Vanadium	<0.02	0.12	0.12	1	1.05	93	0.91	79	17
Beryllium	<0.02	<0.02	<0.02	0.5	0.36	72	0.58	116	2
Copper	<0.02	<0.02	<0.02	1	1.05	105	0.96	96	9
Silver	<0.10	<0.10	<0.10	1	<0.10	0	<0.10	0	--
Mercury	<0.0005	<0.0005	<0.0005	0.0020	0.0022	110	--	[b]	--[b]

[a]*Sample concentration is too high for meaningful spike analysis.*
[b]No matrix spike duplicate was analyzed for mercury.

L1CHD6.W51

TABLE 6-17

ACID TRAIN QC
WATER MS/MSD RESULTS

Element	Blank, Conc., µg/mL	Spike Added, µg/mL	Matrix Spike		Matrix Spike Duplicate	
			Conc., µg/mL	% Recovery	Conc., µg/mL	% Recovery
Chloride	0	7.5	7.26	96.8	7.34	97.8

TABLE 6-18

ACID TRAIN QC
NaOH MS/MSD RESULTS

Element	Blank, Conc., µg/mL	Spike Added, µg/mL	Matrix Spike		Matrix Spike Duplicate	
			Conc., µg/mL	% Recovery	Conc., µg/mL	% Recovery
Chloride	0	7.5	6.33	84.4	6.39	85.2

TABLE 6-19

ACID TRAIN QC
H_2SO_4 MS/MSD RESULTS

Element	Blank, Conc., µg/mL	Spike Added, µg/mL	Matrix Spike Conc., µg/mL	Matrix Spike % Recovery	Matrix Spike Duplicate Conc., µg/mL	Matrix Spike Duplicate % Recovery
Chloride	0	7.5	6.42	85.6	6.26	83.5

TABLE 6-20

FUEL OIL ANION QC RESULTS
SAMPLE 10J-4-144

Element	Blank, Conc., µg/mL	Spike Added, µg/mL	Matrix Spike		Matrix Spike Duplicate	
			Conc., µg/mL	% Recovery	Conc., µg/mL	% Recovery
Fluoride	0	10	6.54	65	6.58	66
Chloride	0	15	11.1	74	11.3	75
Phosphate	0	175	132	75	137	78
Sulfate	0	90	74.3	83	75.1	83

TABLE 6-21

BRINE ANION QC RESULTS
SAMPLE 10J-4-124

Element	Blank, Conc., µg/mL	Spike Added, µg/mL	Matrix Spike		Matrix Spike Duplicate	
			Conc., µg/mL	% Recovery	Conc., µg/mL	% Recovery
Fluoride	0	10	7.88	79	7.91	79
Chloride	19.2	15	31.8	84	32.4	88
Phosphate	0	175	170	97	171	98
Sulfate	8.45	90	97.3	99	98.1	100

TABLE 6-22

SCRUBBER LIQUOR ANION QC RESULTS
SAMPLE 10J-4-116

Element	Blank, Conc., µg/mL	Spike Added, µg/mL	Matrix Spike Conc., µg/mL	Matrix Spike % Recovery	Matrix Spike Duplicate Conc., µg/mL	Matrix Spike Duplicate % Recovery
Fluoride	0	10	8.45	85	8.33	83
Chloride	1050	15	1064	93	1063	87
Phosphate	0	175	172	98	171	99
Sulfate	2760	90	2840	89	2840	89

TABLE 6-23

CAUSTIC ANION QC RESULTS
SAMPLE 10J-4-132

Element	Blank, Conc., µg/mL	Spike Added, µg/mL	Matrix Spike		Matrix Spike Duplicate	
			Conc., µg/mL	% Recovery	Conc., µg/mL	% Recovery
Fluoride	628	10	636	80	637	90
Chloride	2030	15	2050	133	2050	133
Phosphate	0	175	170	97	172	98
Sulfate	0	90	86.7	96	88.4	98

TABLE 6-24

PROCESS WATER ANION QC RESULTS
SAMPLE 10J-4-140

Element	Blank, Conc., µg/mL	Spike Added, µg/mL	Matrix Spike Conc., µg/mL	Matrix Spike % Recovery	Matrix Spike Duplicate Conc., µg/mL	Matrix Spike Duplicate % Recovery
Fluoride	0	10	8.34	83	8.56	85
Chloride	334	15	348	93	347	87
Phosphate	0	175	171	98	171	98
Sulfate	0	90	95.7	97	94.8	96

TABLE 6-25

ANION RESULTS
FIELD QC SAMPLES

Sample Description		Chloride mg/L	Amount Spiked	% Recovery
H_2O Blank	9J-QC-1	ND[a]	0	--
H_2O Low Level Spike	9J-QC-2	2.43	2.47	97.7
H_2O Med Level Spike	9J-QC-3	23.9	24.9	95.9
H_2O High Level Spike	9J-QC-4	248	249	99.6
NaOH Blank	9J-QC-5	ND	0	--
NaOH Low Level Spike	9J-QC-6	1.49	2.49	59.9
NaOH Med Level Spike	9J-QC-7	18.89	24.9	76
NaOH High Level Spike	9J-QC-8	253.4	249	102

[a]ND = Not detected. Detection limits are given in Table 5-39.

TABLE 6-26

TARGET PCDFs/PCDDs IN MM5 TRAINS QC ANALYSES

Sample Description	Sample No.	Amount Found (Nanograms)									
		2,3,7,8-TCDF	2,3,7,8-TCDD	1,2,3,7,8-PeCDF	2,3,4,7,8-PeCDF	1,2,3,7,8-PeCDD	1,2,3,4,7,8-HxCDF	1,2,3,6,7,8-HxCDF	1,2,3,7,8,9-HxCDF	2,3,4,6,7,8-HxCDF	1,2,3,4,7,8-HxCDD
Lab Blank No. 1	V05232	ND[a]	ND	ND	ND	ND	ND	ND	ND	ND	ND
Lab Blank No. 2	V05250	ND	ND	ND	ND	ND	ND	ND	ND	ND	ND
Trip Blank Resin	V05395	ND	ND	ND	ND	ND	ND	ND	ND	ND	ND
Blank Train Filter And Front Wash	V05233	ND	ND	ND	ND	ND	ND	ND	ND	ND	ND
Blank Train Resin and Back Wash	V05234	ND	ND	ND	ND	ND	ND	ND	ND	ND	ND
Field Blank Resin and Water Blank	V05236	ND	ND	ND	ND	ND	ND	ND	ND	ND	ND
Test Run 1 Water Blank	V05381	ND	ND	ND	ND	ND	ND	ND	ND	ND	ND
Filter and Solvent Blank	V05369	ND	ND	ND	ND	ND	ND	ND	ND	ND	ND

[a]ND = Not detected. Detection limit is 0.02 ng for TCDFs and TCDDs; 0.10 ng for PeCDFs, PeCDDs, HxCDFs, HxCDDs, HpCDFs, and HpCDDs; and 0.20 ng for OCDFs and OCDDs.

TABLE 6-26 (CONTINUED)

TARGET PCDFs/PCDDs IN MM5 TRAINS QC ANALYSES

Sample Description	Sample No.	Amount Found (Nanograms) 1,2,3 6,7,8-HxCDD	1,2,3, 7,8,9 HxCDD	1,2,3,4, 6,7,8-HpCDF	1,2,3,4, 7,8,9-HpCDF	1,2,3,4, 6,7,8-HpCDD	OCDF	OCDD	Surrogate[b] (% Recv.)	2,3,7,8-TCDD Toxicity Equivalent
Lab Blank No. 1	VO5232	ND	ND	ND	ND	ND	ND	ND	0.493 (62%)	NC[c]
Lab Blank No. 2	VO5250	ND	ND	ND	ND	ND	ND	ND	0.656 (82%)	NC
Trip Blank Resin	VO5395	ND	ND	ND	ND	ND	ND	ND	1.44 (38%)	NC
Blank Train Filter And Front Wash	VO5233	ND	ND	ND	ND	ND	ND	ND	0.007 (1%)	NC
Blank Train Resin and Back Wash	VO5234	ND	ND	ND	ND	ND	ND	0.345	0.106 (3.7%)	0.000345
Field Blank Resin and Water Blank	VO5236	ND	ND	ND	ND	ND	ND	ND	1.76 (63%)	NC
Test Run 1 Water Blank	VO5381	ND	ND	ND	ND	ND	ND	ND	0.053 (7.0%)	NC
Filter and Solvent Blank	VO5369	ND	ND	ND	ND	ND	0.435	0.525	0.549 (69%)	0.00487

[a]ND = Not detected. Detection limit is 0.02 ng for TCDFs and TCDDs; 0.10 ng for PeCDFs, PeCDDs, HxCDFs, HxCDDs, HpCDFs, and HpCDDs; and 0.20 ng for OCDFs and OCDDs.
[b]The surrogate is $^{37}Cl_4$-2,3,7,8-tetrachlorodibenzo(1,4)dioxin. Resin samples (VO 5234, 5236, 5235, 5261, 5654, and 5251) were spiked with 2.8 ng of the surrogate; the remaining samples were spiked with 0.8 ng of the same surrogate.
[c]No target compounds found, therefore, no Toxicity Equivalent can be calculated.

L1CHD6.V51

TABLE 6-27

TOTAL PCDFs/PCDDs IN M5 TRAINS QC ANALYSES

Sample Description	Sample No.	Amount (Nanograms)									
		TCDF	TCDD	PeCDF	PeCDD	HxCDF	HxCDD	HpCDF	HpCDD	OCDF	OCDD
Lab Blank No. 1	V05232	ND*	ND	ND	ND	ND	ND	ND	ND	ND	ND
Lab Blank No. 2	V05250	ND	ND	ND	ND	ND	ND	ND	ND	ND	ND
Trip Blank Resin	V05395	ND	ND	ND	ND	ND	ND	ND	ND	ND	ND
Blank Train Filter and Front Wash	V05233	ND	ND	ND	ND	ND	ND	0.974	ND	ND	ND
Blank Train Resin and Back Wash	V05234	ND	ND	ND	ND	ND	ND	ND	ND	ND	0.345
Field Blank Resin and Water Blank	V05236	ND	ND	ND	ND	0.111	ND	ND	ND	ND	ND
Test Run 1 Water Blank	V05381	ND	ND	ND	ND	ND	ND	ND	ND	ND	ND
Filter and Solvent	V05369	ND	ND	ND	ND	ND	ND	0.389	ND	0.453	0.525

*ND = Not detected above reporting limit of 0.02 ng for TCDFs and TCDDs; 0.10 ng for PeCDFs, PeCDDs, HxCDFs, HxCDDs, HpCDFs, and HpCDDs; and 0.20 ng for OCDFs and OCDDs.

TABLE 6-28

TOTAL PCDFs/PCDDs IN PROCESS WATER QC ANALYSES

Sample Description	Sample No.	Concentration (ng/L)									
		TCDF	TCDD	PeCDF	PeCDD	HxCDF	HxCDD	HpCDF	HpCDD	OCDF	OCDD
SRI Blank (Test Run 1)	V05344	ND[a]	ND	ND	ND	ND	ND	ND	ND	ND	ND
SRI Blank (Test Run 2)	V05409	ND	ND	ND	ND	ND	ND	ND	ND	ND	ND
SRI Blank (Test Run 3)	V05308	0.06	ND	0.26	ND	ND	ND	ND	ND	ND	ND
SRI Blank (Test Run 4)	V05422	ND	ND	ND	ND	ND	ND	ND	ND	ND	ND
Test Run 3 Post Test (Matrix Spike)	V05424	(113%)[b]	(106%)	(111%)	(104%)	(115%)	(112%)	(115%)	(106%)	(107%)	(110%)
Test Run 3 Post Test (Matrix Spike Duplicate)	V05425	(107%)	(108%)	(111%)	(104%)	(115%)	(112%)	(112%)	(108%)	(106%)	(112%)

[a]ND = Not detected. Detection limit is 0.04 ng/L for TCDFs and TCDDs; 0.20 ng/L for PeCDFs, PeCDDs, HxCDFs, HxCDDs, HpCDFs, and HpCDDs; and 0.40 ng/L for OCDFs and OCDDs.
[b]The percent recovery of spiked components is enclosed in parentheses.

LICHD6.W51

TABLE 6-29

TOTAL PCDFs/PCDDs IN SCRUBBER LIQUOR QC ANALYSES

Sample Description	Sample No.	Concentration Found (ng/L)									
		TCDF	TCDD	PeCDF	PeCDD	HxCDF	HxCDD	HpCDF	HpCDD	OCDF	OCDD
SRI Blank (Test Run 1)	VO5344	ND[a]	ND	ND	ND	ND	ND	ND	ND	ND	ND
SRI Blank (Test Run 2)	VO5344	ND	ND	ND	ND	ND	ND	ND	ND	ND	ND
SRI Blank (Test Run 3)	VO5409	ND	ND	ND	ND	ND	ND	ND	ND	ND	ND
SRI Blank (Test Run 4)	VO5422	ND	ND	ND	ND	ND	ND	ND	ND	ND	ND
Test Run 3 Post Test (Matrix Spike)	VO5401	(116%)[b]	(114%)	(115%)	(110%)	(124%)	(112%)	(112%)	(120%)	(114%)	(129%)
Test Run 2 Post Test (Matrix Spike Duplicate)	VO5402	(118%)	(115%)	(117%)	(108%)	(123%)	(112%)	(114%)	(118%)	(113%)	(132%)

[a]ND = Not detected. Detection limit is 0.04 ng/L for TCDFs and TCDDs; 0.20 ng/L for PeCDFs, PeCDDs, HxCDFs, HxCDDs, HpCDFs, and HpCDDs; and 0.40 ng/L for OCDFs and OCDDs.
[b]The percent recovery of spiked components is enclosed in parentheses.

TABLE 6-30

TOTAL PCDFs/PCDDs IN BRINE QC ANALYSES

Sample Description	Sample No.	Concentration (ng/L)									
		TCDF	TCDD	PeCDF	PeCDD	HxCDF	HxCDD	HpCDF	HpCDD	OCDF	OCDD
SRI Blank (Test Run 1)	V05344	ND[a]	ND	ND	ND	ND	ND	ND	ND	ND	ND
SRI Blank (Test Run 2)	V05344	ND	ND	ND	ND	ND	ND	ND	ND	ND	ND
SRI Blank (Test Run 3)	V05409	ND	ND	ND	ND	ND	ND	ND	ND	ND	ND
SRI Blank (Test Run 4)	V05422	ND	ND	ND	ND	ND	ND	ND	ND	ND	ND
Test Run 3 Post Test (Matrix Spike)	V05411	(111%)[b]	(105%)	(110%)	(105%)	(114%)	(104%)	(110%)	(111%)	(108%)	(132%)
Test Run 3 Post Test (Matrix Spike Duplicate)	V05412	(116%)	(102%)	(110%)	(101%)	(113%)	(111%)	(114%)	(113%)	(108%)	(130%)

[a]ND = Not detected. Detection limit is 0.04 ng/L for TCDFs and TCDDs; 0.20 ng/L for PeCDFs, PeCDDs, HxCDFs, HxCDDs, HpCDFs, and HpCDDs; and 0.40 ng/L for OCDFs and OCDDs.
[b]The percent recovery of spiked components is enclosed in parentheses.

L1CHD6.V51

TABLE 6-31

TOTAL PCDFs/PCDDs IN CAUSTIC QC ANALYSES

Sample Description	Sample No.	Concentration (ng/L)									
		TCDF	TCDD	PeCDF	PeCDD	HxCDF	HxCDD	HpCDF	HpCDD	OCDF	OCDD
SRI Blank (Test Run 1)	V05448	ND[a]	ND	ND	ND	ND	ND	0.84	ND	ND	ND
SRI Blank (Test Run 2)	V05409	ND	ND	ND	ND	ND	ND	ND	ND	ND	ND
SRI Blank (Test Run 3)	V05308	0.06	ND	0.26	ND	ND	ND	ND	ND	ND	ND
SRI Blank (Test Run 4)	V05422	ND	ND	ND	ND	ND	ND	ND	ND	ND	ND
Test Run 3 Post Test (Matrix Spike)	V05415	(118%)[b]	(115%)	(113%)	(107%)	(112%)	(108%)	(105%)	(108%)	(98.9%)	(108%)
Test Run 3 Post Test (Matrix Spike Duplicate)	V05416	(118%)	(116%)	(115%)	(109%)	(117%)	(106%)	(115%)	(110%)	(112%)	(110%)

[a]ND = Not detected. Detection limit is 0.04 ng/L for TCDFs and TCDDs; 0.20 ng/L for PeCDFs, PeCDDs, HxCDFs, HxCDDs, HpCDFs, and HpCDDs; and 0.40 ng/L for OCDFs and OCDDs.
[b]The percent recovery of spiked components is enclosed in parentheses.

LICHD6.V51

TABLE 6-32

TOTAL PCDFs/PCDDs IN FUEL OIL QC ANALYSES

Sample Description	Sample No.	Concentration (ng/kg)									
		TCDF	TCDD	PeCDF	PeCDD	HxCDF	HxCDD	HpCDF	HpCDD	OCDF	OCDD
SRI Blank	V05548	ND[a]	ND	ND	ND	ND	ND	ND	ND	ND	ND
Test Run 3 Post Test (Matrix Spike)	V05541	(91.2%)[b]	(89.9%)	(103%)	(111%)	(109%)	(102%)	(106%)	(98.1%)	(112%)	(112%)
Test Run 3 Post Test (Matrix Spike Duplicate)	V05542	(102%)	(89.5%)	(118%)	(116%)	(121%)	(109%)	(119%)	(108%)	(116%)	(122%)

[a]ND = Not detected. Detection limit is 0.04 ng/L for TCDFs and TCDDs; 0.20 ng/L for PeCDFs, PeCDDs, HxCDFs, HxCDDs, HpCDFs, and HpCDDs; and 0.40 ng/L for OCDFs and OCDDs.
[b]The percent recovery of spiked components is enclosed in parentheses.

LICH06.V51

Background Document H, Reference 14

U.S. Environmental Protection Agency, 1983, EPA Guidance Manual for Hazardous Waste Incineration Permits, Washington, D.C.

This is not a key reference. For information on ordering this document, contact the RCRA Superfund and EPCRA hotline: 1-800-424-9346 (www.epa.gov/epaoswer/hotline) or order directly from NTIS: 1-800-553-6847 (PB86-100577)

Background Document H, Reference 15

U.S. Environmental Protection Agency, 1988a, Methodology for Developing Best Demonstrated Available Technology (BDAT) Treatment Standards, Office of Solid Waste, Washington, D.C.

This is not a key reference. For information on ordering this document, contact the RCRA Superfund and EPCRA hotline: 1-800-424-9346 (www.epa.gov/epaoswer/hotline) or order directly from NTIS: 1-800-553-6847 (PB89-221428)

Background Document H, Reference 16

U.S. Environmental Protection Agency, 1988b, BDAT Background Document for K037, Office of Solid Waste, Washington, D.C.

This is not a key reference. For information on ordering this document, contact the RCRA Superfund and EPCRA hotline: 1-800-424-9346 (www.epa.gov/epaoswer/hotline) or order directly from NTIS: 1-800-553-6847 (PB89-142434)

EPA United States Environmental Protection Agency

National Environmental Publications Information

Basic Search - Results Image

Search publications for

4. 625689019 Handbook: Guidance on Setting Permit Conditions and Reporting Trial Burn Results: Volume II of the Hazardous Waste Incineration Guidance Series

Next Page Enlarge Image Shrink Image

This is page 1 of 232.

United States Environmental Protection Agency | Office of Research and Development Washington DC 20460 | Office of Solid Waste and Emergency Response Washington DC 20460

Technology Transfer | January 1989 | EPA/625/6-89/019

EPA

Handbook

Guidance on Setting Permit Conditions and Reporting Trial Burn Results

Volume II of the Hazardous Waste Incineration Guidance Series

EPA United States Environmental Protection Agency

National Environmental Publications Information

Basic Search - Results Image

Search publications for

4. 625689019 Handbook: Guidance on Setting Permit Conditions and Reporting Trial Burn Results: Volume II of the Hazardous Waste Incineration Guidance Series

Next Page | Previous Page | Enlarge Image | Shrink Image

APPENDIX D

Designating Principal Organic Hazardous Constituents

Barry Dellinger and Phillip H. Taylor
University of Dayton Research Institute
Dayton, Ohio
(Duplicated in this document without change)

D.1 Background

The destruction efficiency (DE) of POHCs is dominated by the temperature, time, and fuel/air stoichiometry (excess air) experienced by the POHCs in the high temperature zones of incinerators. Calculations and experimental observations have shown that the emissions of undestroyed, residual POHCs are kinetically (reaction rate), not thermodynamically controlled [Tsang and Shaub (1982), Tranholm, et al (1984)]. Thus, determination of the exact time, temperature, and stoichiometry history of all the molecules in an incinerator is necessary to determine the absolute DE of a POHC. This type of information is, of course, not currently available. However, sufficient information is available to estimate the relative DE of potential POHCs.

Simple conceptual and more complex models suggest that the gas-phase residence time and temperature in the post-flame or thermal zones of incinerators control the relative emissions of most POHCs [Dellinger, et al (1986), Clark, et al (1984)]. The basic reason behind this is that all molecules entering the flame zone of an incinerator are essentially destroyed and only the small fraction escaping the flame zone may be emitted from the facility. Various flame zone "failure modes" exist which may cause residual POHCs to be emitted. Once in the post-flame zone, gas-phase thermal decomposition kinetics control the rate of POHC destruction and PIC formation and destruction.

If all POHCs in a given waste stream in a given incinerator are volatilized at nearly the same rate, they will experience the same post-flame gas-phase residence time, temperature, and stoichiometry history. This means that the gas-phase thermal stability of the POHCs (as determined under a standardized set of conditions) may be used to predict their relative incinerability. The temperature for 99% destruction at 2.0 seconds gas-phase residence time, [$T_{99}(2)$(°C)], is one method of ranking the thermal stability of POHCs. Other residence times or temperatures may be used to develop this ranking. However, laboratory data indicate that although absolute POHC DEs are dependent upon time and temperature, the relative DEs, i.e., incinerability ranking, are relatively insensitive to these parameters [Dellinger, et al (1984), Graham, et al (1986), Taylor and Dellinger (1988)]. On the other hand, stoichiometry has been shown to be a major variable in determining relative stability [Graham, et al (1986) Taylor and Dellinger (1988)].

Theoretical considerations suggest that oxygen-starved pathways through the incinerator are responsible for most POHC and PIC emissions. Even though the facility may be operating under nominally excess air conditions, poor mixing will result in oxygen-deficient pockets where the rate of POHC destruction is low and PIC formation is favored. Consequently, it is believed that gas-phase thermal stability under sub-stoichiometric oxygen conditions is an effective predictor of POHC relative incinerability.

A recent study compared the incinerability predictions of several proposed POHC ranking methods with results of 10 pilot- or full-scale test burns [Dellinger, et al (1988)]. The ranking methods included heat of combustion, autoignition temperature, ignition delay time, flame failure modes, theoretical flame mode kinetics, thermal stability of pure compounds under excess air conditions, thermal stability of mixtures under oxidative conditions, and the thermal stability of mixtures under oxygen-starved conditions. Correlations of the prediction of the rankings with field results were poor except for thermal stability of mixtures under oxygen-starved conditions. Although the laboratory data base used to predict full-scale POHC DREs was very limited, statistically significant correlations in 7 of 10 cases

EPA United States Environmental Protection Agency

National Environmental Publications Information

Basic Search - Results Image

Search publications for

4. 625689019 Handbook: Guidance on Setting Permit Conditions and Reporting Trial Burn Results: Volume II of the Hazardous Waste Incineration Guidance Series

Next Page | Previous Page | Enlarge Image | Shrink Image

were observed using this ranking approach. The results of this comparison along with theoretical considerations suggest that this type of thermal stability ranking should be used to replace the previously recommended heat of combustion index.

D.2 Construction of the Ranking

Tables D-1 and D-2 present the incinerability ranking of Appendix VIII organic compounds based on the gas-phase thermal stability under oxygen-starved conditions. This ranking is considered preliminary as actual experimental data has been generated on a limited number of compounds. The ranking is based on available experimental data generated predominantly at the University of Dayton Research Institute (UDRI), limited studies reported in the open literature, and theoretical considerations.

Currently, sixty-one compounds have been experimentally evaluated by UDRI under a consistent set of experimental conditions which was devised based on the previous discussion [Dellinger and Taylor (1987), Taylor and Dellinger (1987)]. These compounds, for which experimental data has been generated which is consistent with available literature data or theoretical consideration, are designated experimentally evaluated and are listed in boldface. Compounds which have not been experimentally studied by UDRI under these consistent test conditions, but for which experimental data exist within the open literature, are listed in italics. The remaining compounds were ranked based on limited experimental data on the actual compound, data on similar compounds, and/or reaction kinetic theory. For this latter group, which includes the majority of the ranking, sufficient data were not available to designate the compounds as experimentally evaluated. Thus, their ranking should be considered tentative and subject to change following experimental study.

The ranking was devised by assigning $T_{99}(2)$ values to each compound. For some compounds, initially identical values of $T_{99}(2)$ were assigned resulting in identical rankings. For example, there was no clearout basis for predicting the relative stability of diphenyl amine, 1,1 dichloroethene, and fluoroacetic acid. Hence, the three compounds received a "tie" ranking as the 41st most stable compound. In other instances, the compounds that were initially assigned identical $T_{99}(2)$ values belonged to homologous series. In this case, the mechanisms of destruction were similar and relative reaction rates could be assigned. This was generally the case for polynuclear aromatics (PNAs); consequently, unique rankings could be assigned for most of these compounds. In general, it was not possible to further distinguish the initial ranking when the compounds in question decomposed by different mechanisms (i.e., "comparing apples and oranges"). In spite of these uncertainties, it is felt that the overall trend is correct. It is generally felt that the uncertainty in predicting $T_{99}(2)$ values, the accuracy of field test data, and the variation in the actual pollutant emissions from facility to facility does not justify a more precise, 1 to 1 ranking of the Appendix VIII organics.

The ranking includes all individually-listed organic compounds included on the current Appendix VIII list. Appendix VIII also lists many compounds by class (N.O.S.) We have generally not included a ranking of individual compounds only included in Appendix VIII as part of an N.O.S. listing. However, many compounds are listed individually and by class. When this occurs, our ranking includes the individually-listed compounds. Exceptions to this rule were made for 1,2,2-trichloro-1,1,2-trifluoroethane, dichlorofluoromethane, chlorodifluoromethane, ethyl chloride, 1,3,5-trichlorobenzene, and 1,2,3,5-tetrachlorobenzene. Experimental data were available for these compounds and they have been of interest as frequently selected POHCs or possible incineration surrogates. Sulfur hexafluoride has also been included in our ranking, although not on Appendix VIII, due to interest in its utility as an incineration surrogate [Taylor and Chadbourne (1987)].

Trace metal-containing compounds were not included in this ranking since the metal itself is a toxic moiety and is not destroyed in the incineration process.

The incinerability ranking will be updated and revised semi-annually as additional experimental data become available and it is possible to expand the list of experimentally evaluated compounds. It is recognized that there may be some errors in this initial ranking due to the lack of a complete data base. However, it is felt that this ranking is already significantly superior to that generated based on the heat of combustion index.

D.3 Using the Ranking

The ranking in Table D-1 is grouped by horizontal lines which separate compounds into nine thermal stability classes, i.e., very stable, moderately stable, fragile, etc. This grouping is generally based on natural divisions in the predicted stability or theory which suggest significantly different mechanistic pathways for the decomposition of compounds within different classes.

One may use the thermal stability ranking in the same manner as the previous heat of combustion index, i.e., selection of a group of POHCs for trial burn testing and only allow POHCs to be burned which are lower in the ranking than the most fragile POHC for which 99.99% DRE can be demonstrated. An alternative approach would be to only allow trial burn testing of experimentally evaluated POHCs, but allow incineration of all POHCs lower in the ranking than

EPA United States Environmental Protection Agency

National Environmental Publications Information

Basic Search - Results Image

Search publications for

4. 625689019 Handbook: Guidance on Setting Permit Conditions and Reporting Trial Burn Results: Volume II of the Hazardous Waste Incineration Guidance Series

the least stable POHC for which 99.99% DRE can be demonstrated.

Another alternative approach involves the use of the incinerability class divisions. In this approach, one can demonstrate 99.99% DRE of a group of experimentally evaluated POHCs within an incinerability class and receive approval to burn all other POHCs within and below that class. For example, if 99.99% DRE can be demonstrated for chloromethane, acetonitrile, and chlorobenzene, the facility would be allowed to burn any Appendix VIII compound. As a second example, if 99.99% DRE is demonstrated for hexachlorobutadiene, methyl ethyl ketone, and cresol, the facility would only be allowed to burn compounds ranked in class 3 or lower. Since the ranking is subject to semi-annual revision, it is suggested that the ranking which is current when the trial burn is approved be used throughout the permit process unless a change in POHC selection is mutually agreed upon by all interested parties. A summary of the ranking by classes is given in Table D-3.

It should be noted that reformation of a POHC from its own decomposition products or formation of the POHC as a PIC from another waste feed component is generally not included as a factor in this ranking. Significantly, laboratory studies have shown that both POHC reformation and PIC formation can affect observed DEs [Taylor and Dellinger (1988), Dellinger, et al (1988)]. In some instances, it is felt that the laboratory determination of $T_{99}(2)(°C)$ were unavoidably affected by POHC reformation, (e.g., formation of chloromethane from chlorine atom attack on methane). When it was judged that POHC reformation was inevitable from almost any waste, reformation was included in the thermal stability ranking. However, some deviation from the predicted ranking may be expected due to PIC formation. As additional studies concerning PICs are completed, guidelines for evaluating the role of PIC formation will be furnished.

The extensive testing conducted by UDRI has shown that the ranking of most of the compounds is relatively insensitive to composition of the waste mixture. However, a few notable exceptions have been observed in initial tests. This includes aniline derivatives and PNAs in general. Somewhat lesser variability has been observed for benzene, toluene, and pyridine, which were judged to be sufficiently constant to be included as experimentally evaluated compounds. Consequently, it is suggested that the waste composition be carefully considered before these compounds are selected as POHCs. Benzene, toluene, and PNAs are expected to be particularly prone to formation as PICs in full-scale incinerations and observed DREs may be significantly affected. Effects of PIC formation may be minimized by feeding the POHC at a sufficiently high concentration.

Finally, it should be noted that no rankings are given for PCBs which are listed as N.O.S. in Appendix VIII. An estimate of the stability of individual PCB congeners may be made by assuming that the congener is slightly less stable than the chlorinated benzene corresponding to the least chlorinated ring in the PCB congener of interest. This means, for example, that dichlorobenzene would be a suitable incineration surrogate for 2,2',3,3',4-pentachlorobiphenyl, monochlorobenzene would be a suitable incineration surrogate for 3,3',4,5-tetrachlorobiphenyl and pentachlorobenzene would be a surrogate for decachlorobiphenyl. As suitable experimental data is generated, thermal stability data on PCBs will be furnished in the updated ranking.

Although not currently listed specifically on the Appendix VIII list, the incinerability of chlorinated dibenzo-p-dioxin and dibenzofuran isomers are of intense interest. As further testing proceeds, we plan to furnish stability data on these important compounds.

D.4 References

1. W. Tsang and W. Shaub. *Chemical Process in the Incineration of Hazardous Materials*, Detoxification of Hazardous Waste. J. Exner, Ed. Ann Arbor. 1982, pp. 41-69.

2. A. Trenholm, P. Gorman, and G. Jungclaus. *Performance Evaluation of Full-Scale Incineration*. MRI Report Under EPA Contract 68-02-3177. 1984.

3. B. Dellinger, W. Rubey, D. Hall, and J. Graham. *Hazardous Waste and Hazardous Materials*, 3, No. 2, 1986, pp. 139-150.

4. W. Clark, M. Heap, W. Richter, and W. Seeker. *The Prediction of Liquid Injection Hazardous Waste Incinerator Performance*. ASME AIChE 22nd National Heat Transfer Conference. 1984.

5. B. Dellinger, J. Torres, W. Rubey, D. Hall, J. Graham, and R. Carnes. *Hazardous Waste and Hazardous Materials*, 1, No. 2. 1984. pp. 137-157.

6. J. Graham, D. Hall, and B. Dellinger. *Environ. Sci. Technol.* 20, No. 7. 1986, pp. 703-710.

7. B. Dellinger, M. Graham, and D. Tirey. *Hazardous Waste and Hazardous Materials*, 3, No. 3, 1986, pp. 293-307.

8. P.H. Taylor and B. Dellinger. *Thermal Degradation Characteristics of Chloromethane Mixtures*. Environ. Sci. Technol., Vol. 22, No. 4, p. 438. 1988.

EPA United States Environmental Protection Agency

National Environmental Publications Information

Basic Search - Results Image

Search publications for

4. 625689019 Handbook: Guidance on Setting Permit Conditions and Reporting Trial Burn Results: Volume II of the Hazardous Waste Incineration Guidance Series

Next Page | Previous Page | Enlarge Image | Shrink Image

This is page 132 of 232.

9. P.H. Taylor and J.F. Chadbourne. *Sulfur Hexafluoride as a Surrogate for Monitoring Hazardous Waste Incinerator Performance.* Journal of the Air Pollution Control Association, Vol. 37, No. 6. p. 729. 1987.

10. B. Dellinger, D.A. Tirey, P.H. Taylor, J. Pan, and C.C. Lee. *Products of Incomplete Combustion from the High Temperature Pyrolysis of Chlorinated Methanes.* 3rd Chemical Congress of North America and the 195th National Meeting of the American Chemical Society, Division of Environmental Chemistry Preprints, Vol. 28, No. 1. p. 81. Toronto, Ontario, Canada. 1988.

EPA United States Environmental Protection Agency

National Environmental Publications Information

Basic Search - Results Image

Search publications for

4. 625689019 Handbook: Guidance on Setting Permit Conditions and Reporting Trial Burn Results: Volume II of the Hazardous Waste Incineration Guidance Series

Table D-1. Principal Hazardous Organic Constituent Thermal Stability Index

Principal Hazardous Organic Constituent	Rank
CLASS 1	
CYANOGEN (ETHANEDINITRILE)	1
HYDROGEN CYANIDE (HYDROCYANIC ACID) [2]	2
BENZENE [2]	3
SULFUR HEXAFLUORIDE [3]	4
NAPHTHALENE [2]	5
FLUORANTHENE (BENZO[j,k]FLUORENE)	6
BENZO[j]FLUORANTHENE (7,8-BENZOFLUORANTHENE)	7
BENZO[b]FLUORANTHENE (2,3-BENZOFLUORANTHENE)	8
BENZANTHRACENE (1,2-) (BENZ[a]ANTHRACENE)	9
CHRYSENE (1,2-BENZPHENANTHRENE)	10
BENZO[a]PYRENE (1,2-BENZOPYRENE)	11
DIBENZ[a,h]ANTHRACENE (1,2,5,6-DIBENZANTHRACENE)	12
INDENO(1,2,3-cd)PYRENE (1,10-(1,2-PHENYLENE)PYRENE)	13
DIBENZO[a,h]PYRENE (1,2,5,6-DIBENZOPYRENE)	14
DIBENZO[a,i]PYRENE (1,2,7,8-DIBENZOPYRENE)	15
DIBENZO[a,e]PYRENE (1,2,4,5-DIBENZOPYRENE)	16
CYANOGEN CHLORIDE (CHLORINE CYANIDE)	17-18
ACETONITRILE (ETHANENITRILE) [2]	17-18
CHLOROBENZENE [2]	19
ACRYLONITRILE (2-PROPENENITRILE) [2]	20
DICHLOROBENZENE (1,4-DICHLOROBENZENE)	21-22
CHLORONAPHTHALENE (1-) [2]	21-22
CYANOGEN BROMIDE (BROMINE CYANIDE)	23-24
DICHLOROBENZENE (1,2-DICHLOROBENZENE) [2]	23-24
DICHLOROBENZENE (1,3-DICHLOROBENZENE) [2]	25
TRICHLOROBENZENE (1,3,5-TRICHLOROBENZENE) [2] [4]	26-27
TRICHLOROBENZENE (1,2,4-TRICHLOROBENZENE) [2]	26-27
TETRACHLOROBENZENE (1,2,3,5-TETRACHLOROBENZENE) [2] [4]	28
CHLOROMETHANE (METHYL CHLORIDE) [2]	29-30
TETRACHLOROBENZENE (1,2,4,5-TETRACHLOROBENZENE)	29-30
PENTACHLOROBENZENE [2]	31-33
HEXACHLOROBENZENE [2]	31-33
BROMOMETHANE (METHYL BROMIDE) [2]	31-33
TETRACHLORODIBENZO-p-DIOXIN (2,3,7,8-) (TCDD)	34
CLASS 2	
TOLUENE (METHYLBENZENE) [2]	35
TETRACHLOROETHENE [2]	36
CHLOROANILINE (CHLOROBENZENAMINE)	37
DDE(1,1-DICHLORO-2,2-BIS(4-CHLOROPHENYLETHYLENE)	38
FORMIC ACID (METHANOIC ACID)	39-40
PHOSGENE (CARBONYL CHLORIDE)	39-40
TRICHLOROETHENE [2]	41
DIPHENYLAMINE (N-PHENYLBENZENAMINE)	42-44
DICHLOROETHENE (1,1-) [2]	42-44
FLUOROACETIC ACID	42-44
DIMETHYLBENZ[a]ANTHRACENE (7,12-)	45
ANILINE (BENZENAMINE)	46-50
FORMALDEHYDE (METHYLENE OXIDE)	46-50
MALONONITRILE (PROPANEDINITRILE)	46-50
METHYL CHLOROCARBONATE (CARBONOCHLORIDIC ACID, METHYL ESTER)	46-50

EPA United States Environmental Protection Agency

National Environmental Publications Information

Basic Search - Results Image

Search publications for

4. 625689019 Handbook: Guidance on Setting Permit Conditions and Reporting Trial Burn Results: Volume II of the Hazardous Waste Incineration Guidance Series

Next Page | Previous Page | Enlarge Image | Shrink Image

Table D-1. Principal Hazardous Organic Constituent Thermal Stability Index (continued)

Principal Hazardous Organic Constituent	Rank
METHYL ISOCYANATE (METHYLCARBYLAMINE)	46-50
AMINOBIPHENYL (4-) ([1,1'-BIPHENYL]-4-AMINE)	51
NAPHTHYLAMINE (1-)	52-53
NAPHTHYLAMINE (2-)	52-53
DICHLOROETHENE (trans-1,2-) [2]	54
FLUOROACETAMIDE (2-)	55-56
PROPYN-1-OL (2-) (PROPARGYL ALCOHOL)	55-56
PHENYLENEDIAMINE (1,4) (BENZENEDIAMINE)	57-59
PHENYLENEDIAMINE (1,2-) (BENZENEDIAMINE)	57-59
PHENYLENEDIAMINE (1,3-) (BENZENEDIAMINE)	57-59
BENZIDINE ([1,1'-BIPHENYL]-4,4'DIAMINE)	60-64
ACRYLAMIDE (2-PROPENAMIDE)	60-64
DIMETHYLPHENETHYLAMINE (alpha, alpha-)	60-64
METHYL METHACRYLATE (2-PROPENOIC ACID, 2-METHYL-, METHYL ESTER)	60-64
VINYL CHLORIDE (CHLOROETHENE)	60-64
DICHLOROMETHANE (METHYLENE CHLORIDE) [2]	65-66
METHACRYLONITRILE (2-METHYL-2-PROPENENITRILE) [2]	65-66
DICHLOROBENZIDINE (3,3'-)	67
METHYLCHOLANTHRENE (3-)	68
TOLUENEDIAMINE (2,6-) (DIAMINOTOLUENE)	69-77
TOLUENEDIAMINE (1,4-) (DIAMINOTOLUENE)	69-77
TOLUENEDIAMINE (2,4-) (DIAMINOTOLUENE)	69-77
TOLUENEDIAMINE (1,3-) (DIAMINOTOLUENE)	69-77
TOLUENEDIAMINE (3,5-) (DIAMINOTOLUENE)	69-77
TOLUENEDIAMINE (3,4-) (DIAMINOTOLUENE)	69-77
CHLORO-1,3-BUTADIENE (2-) (CHLOROPRENE)	69-77
PRONAMIDE (3,5-DICHLORO-N-[1,1-DIMETHYL-2-PROPYNYL] BENZAMIDE)	69-77
ACETYLAMINOFLUORENE (2-) (ACETAMIDE,N-[9H-FLUOREN-2-YL]-)	69-77
<u>CLASS 3</u>	
DIMETHYLBENZIDINE (3,3'-)	78
n-PROPYLAMINE (1-PROPANAMINE)	79
PYRIDINE [2]	80
PICOLINE (2-) (PYRIDINE, 2-METHYL-)	81-84
DICHLOROPROPENE (1,1-) [2]	81-84
THIOACETAMIDE (ETHANETHIOAMIDE)	81-84
1,2,2-TRICHLORO-1,1,2-TRIFLUOROETHANE [2] [3]	81-84
BENZ[c]ACRIDINE (3,4-BENZACRIDINE)	85-88
DICHLORODIFLUOROMETHANE [2]	85-88
ACETOPHENONE (ETHANONE, 1-PHENYL-) [2]	85-88
TRICHLOROFLUOROMETHANE [2]	85-88
DICHLOROPROPENE (trans-1,2-)	89-91
ETHYL CYANIDE (PROPIONITRILE) [2]	89-91
BENZOQUINONE (1,4-CYCLOHEXADIENEDIONE)	89-91
DIBENZ[a,h]ACRIDINE (1,2,5,6-DIBENZACRIDINE)	92-97
DIBENZ[a,j]ACRIDINE (1,2,7,8-DIBENZACRIDINE)	92-97
HEXACHLOROBUTADIENE (trans-1,3) [2]	92-97
NAPHTHOQUINONE (1,4-) (1,4-NAPHTHALENEDIONE)	92-97
DIMETHYL PHTHALATE [2]	92-97
ACETYL CHLORIDE (ETHANOYL CHLORIDE) [2]	92-97
ACETONYLBENZYL-4-HYDROXYCOUMARIN (3-alpha-) (WARFARIN)	98-99
MALEIC ANHYDRIDE (2,5-FURANDIONE)	98-99

EPA United States Environmental Protection Agency

National Environmental Publications Information

Basic Search - Results Image

Search publications for

4. 625689019 Handbook: Guidance on Setting Permit Conditions and Reporting Trial Burn Results: Volume II of the Hazardous Waste Incineration Guidance Series

Next Page | Previous Page | Enlarge Image | Shrink Image

Table D-1. Principal Hazardous Organic Constituent Thermal Stability Index (continued)

Principal Hazardous Organic Constituent	Rank
PHENOL (HYDROXYBENZENE)	100-101
DIBENZO[c,g]CARBAZOLE (7H-) (3,4,5,6-DIBENZCARBAZOLE)	100-101
CHLOROPHENOL (2-)	102
CRESOL (1,3-) (METHYLPHENOL)	103
CRESOL (1,4-) (METHYLPHENOL) [2]	104-105
CRESOL (1,2-) (METHYLPHENOL)	104-105
ACROLEIN (2-PROPENAL)	106-107
DIHYDROXY-ALPHA-[METHYLAMINO]METHYL BENZYL ALCOHOL (3,4-)	106-107
METHYL ETHYL KETONE (2-BUTANONE) [2]	108-109
DIETHYLSTILBESTEROL	108-109
BENZENETHIOL (THIOPHENOL) [2]	110
RESORCINOL (1,3-BENZENEDIOL)	111
ISOBUTYL ALCOHOL (2-METHYL-1-PROPANOL) [2]	112
CROTONALDEHYDE (2-BUTENAL) [2]	113-115
DICHLOROPHENOL (2,4-)	113-115
DICHLOROPHENOL (2,6-)	113-115
METHYLACTONITRILE (2-) (PROPANENITRILE,2-HYDROXY-2-METHYL)	116-118
ALLYL ALCOHOL (2-PROPEN-1-OL)	116-118
CHLOROCRESOL (4-CHLORO-3-METHYLPHENOL)	116-118
DIMETHYLPHENOL (2,4-)	119
CLASS 4	
CHLOROPROPENE 3-(ALLYL CHLORIDE) [2]	120
DICHLOROPROPENE (cis-1,3-)	121-125
DICHLOROPROPENE (trans-1,3-)	121-125
TETRACHLOROETHANE (1,1,2,2-) [2]	121-125
TRICHLOROPHENOL (2,4,5-)	121-125
TRICHLOROPHENOL (2,4,6-)	121-125
CHLOROETHANE (ETHYL CHLORIDE) [4] [5]	126
DICHLOROPROPENE (2,3-)	127-130
HYDRAZINE (DIAMINE) [5]	127-130
BENZYL CHLORIDE (CHLOROMETHYLBENZENE) [2]	127-130
DIBROMOMETHANE (METHYLENE BROMIDE) [2]	127-130
DICHLOROETHANE (1,2-) [2]	131
MUSTARD GAS (bis(2-CHLOROETHYL)-SULFIDE)	132-134
NITROGEN MUSTARD	132-134
N,N-BIS(2-CHLOROETHYL)2-NAPHTHYLAMINE (CHLORNAPHAZINE)	132-134
DICHLOROPROPENE (3,3-)	135
DICHLORO-2-BUTENE (1,4-)	136-140
TETRACHLOROPHENOL (2,3,4,6-)	136-140
TETRACHLOROMETHANE (CARBONTETRACHLORIDE) [2]	136-140
BROMOACETONE (1-BROMO-2-PROPANONE)	136-140
HEXACHLOROPHENE (2,2'-METHYLENEbis[3,4,6-TRICHLOROPHENOL])	136-140
DIOXANE (1,4-) (1,4-DIETHYLENE OXIDE) [2]	141
CHLORAMBUCIL	142
NITROBENZENE [2]	143
CHLOROPROPIONITRILE (3-) (3-CHLOROPROPANENITRILE) [2]	143-144
DICHLORO-2-PROPANOL (1,1-)	145-146
DDD (DICHLORODIPHENYLDICHLOROETHANE)	145-146
DICHLORO-2-PROPANOL (1,3-)	147
PHTHALIC ANHYDRIDE (1,2-BENZENEDICARBOXYLIC ACID ANHYDRIDE)	148-150
METHYL PARATHION	148-150

EPA United States Environmental Protection Agency

National Environmental Publications Information

Basic Search - Results Image

Search publications for

4. 625689019 Handbook: Guidance on Setting Permit Conditions and Reporting Trial Burn Results: Volume II of the Hazardous Waste Incineration Guidance Series

Next Page | Previous Page | Enlarge Image | Shrink Image

Table D-1. Principal Hazardous Organic Constituent Thermal Stability Index (continued)

Principal Hazardous Organic Constituent	Rank
NITROPHENOL (4-)	148-150
CHLORODIFLUOROMETHANE [2] [4]	151-153
PENTACHLOROPHENOL	151-153
HEXACHLOROCYCLOHEXANE (LINDANE) [2]	151-153
DICHLOROFLUOROMETHANE [2] [4]	154-157
DINITROBENZENE (1,3-)	154-157
NITROANILINE (4-NITROBENZENAMINE)	154-157
PENTACHLOROETHANE [2]	154-157
DINITROBENZENE (1,4-)	158-161
DINITROBENZENE (1,2-)	158-161
TRICHLOROETHANE (1,1,2-) [2]	158-161
TRICHLOROMETHANE (CHLOROFORM) [2]	158-161
DIELDRIN	162-164
ISODRIN	162-164
ALDRIN	162-164
DICHLOROPROPANE (1,3-) [5]	166
NITROTOLUIDINE (5-) (BENZENAMINE,2-METHYL-5-NITRO-)	166-167
CHLOROACETALDEHYDE	166-167
TRICHLOROPROPANE (1,2,3-) [2]	168-173
DINITROTOLUENE (2,4-)	168-173
DINITROTOLUENE (2,6-)	168-173
HEXACHLOROCYCLOPENTADIENE	168-173
BENZAL CHLORIDE (ALPHA, ALPHA-DICHLOROTOLUENE) [2]	168-173
DICHLORO-1-PROPANOL (2,3-)	168-173
ETHYLENE OXIDE (OXIRANE) [5]	174
DICHLOROETHANE (1,1-) (ETHYLIDENE DICHLORIDE) [5]	175-178
DIMETHYLCARBAMOYLCHLORIDE	175-178
GLYCIDYALDEHYDE (1-PROPANOL-2,3-EPOXY)	175-178
DDT (DICHLORODIPHENYLTRICHLOROETHANE)	175-178
DICHLOROPROPANE (1,2-) (PROPYLENE DICHLORIDE) [5]	179
AURAMINE	180-181
HEPTACHLOR	180-181
DICHLOROPROPANE (1,1-) [5]	182
CHLORO-2,3-EPOXYPROPANE (1-) (OXIRANE,2-CHLOROMETHYL-)	183-186
DINITROPHENOL (2,4-)	183-186
bis(2-CHLOROETHYL)ETHER [2]	183-186
TRINITROBENZENE (1,3,5-TRINITROBENZENE)	183-186
BUTYL-4,6-DINITROPHENOL (2-sec-) (DNBP)	187-188
CYCLOHEXYL-4,6-DINITROPHENOL (2-)	187-188
bis(2-CHLOROETHOXY)METHANE	189-192
CHLORAL (TRICHLOROACETALDEHYDE)	189-192
TRICHLOROMETHANETHIOL	189-192
DINITROCRESOL (4,6-) (PHENOL,2,4-DINITRO-6-METHYL-)	189-192
HEPTACHLOR EPOXIDE	193
DIEPOXYBUTANE (1,2,3,4-) (2,2'-BIOXIRANE)	194
CLASS 5	
BENZOTRICHLORIDE (TRICHLOROMETHYLBENZENE)	195-196
METHAPYRILENE	195-196
PHENACETIN (N-[4-ETHOXYPHENYL]ACETAMIDE)	197-198
METHYL HYDRAZINE [5]	197-198
DIBROMOETHANE (1,2-) (ETHYLENE DIBROMIDE)	199

EPA United States Environmental Protection Agency

National Environmental Publications Information

Basic Search - Results Image

Search publications for

4. 625689019 Handbook: Guidance on Setting Permit Conditions and Reporting Trial Burn Results: Volume II of the Hazardous Waste Incineration Guidance Series

Next Page | Previous Page | Enlarge Image | Shrink Image

Table D-1. Principal Hazardous Organic Constituent Thermal Stability Index (continued)

Principal Hazardous Organic Constituent	Rank
AFLATOXINS	200
TRICHLOROETHANE (1,1,1-) (METHYL CHLOROFORM) [2]	201
HEXACHLOROETHANE [2]	202-203
BROMOFORM (TRIBROMOMETHANE) [2]	202-203
CHLOROBENZILATE	204-207
ETHYL CARBAMATE (URETHAN) (CARBAMIC ACID, ETHYL ESTER)	204-207
ETHYL METHACRYLATE (2-PROPENOIC ACID, 2-METHYL-,ETHYL ESTER)	204-207
LASIOCARPINE	204-207
AMITROLE (1H-1,2,4-TRIAZOL-3-AMINE)	208-209
MUSCIMOL (5-AMINOMETHYL-3-ISOAZOTOL)	208-209
IODOMETHANE (METHYL IODIDE)	210
DICHLOROPHENOXYACETIC ACID (2,4-) (2,4-D)	211-213
CHLOROETHYLVINYLETHER (2-) (ETHENE,[2-CHLOROETHOXY]-) [2]	211-213
METHYLENE BIS(2-CHLOROANILINE) (4,4-)	211-213
DIBROMO-3-CHLOROPROPANE (1,2-)	214
TETRACHLOROETHANE (1,1,1,2-) [2]	215
DIMETHYLHYDRAZINE (1,1-) [5]	216-217
N,N-DIETHYLHYDRAZINE (1,2-DIETHYLHYDRAZINE)	216-217
CHLOROMETHYLMETHYL ETHER (CHLOROMETHOXYMETHANE)	218-220
DIMETHYL-1-METHYLTHIO-2-BUTANONE,O-[(METHYLAMINO)-CARBONYL] OXIME (3,3-) (THIOFANOX)	218-220
DIMETHYLHYDRAZINE (1,2-)	218-220
CHLORDANE (ALPHA AND GAMMA ISOMERS)	221
bis(CHLOROMETHYL)ETHER (METHANE-OXYbis[2-CHLORO-])	222-223
PARATHION [5]	222-223
DICHLOROPROPANE (2,2-) [5]	224
MALEIC HYDRAZIDE (1,2-DIHYDRO-3,6-PYRIDAZINEDIONE)	226
BROMOPHENYL PHENYL ETHER (4-) (BENZENE,1-BROMO-4-PHENOXY-)	226
bis(2-CHLOROISOPROPYL)ETHER	227-228
DIHYDROSAFROLE (1,2-METHYLENEDIOXY-4-PROPYLBENZENE)	227-228
METHYL METHANESULFONATE (METHANESULFONIC ACID, METHYL ESTER)	229
PROPANE SULFONE (1,3-) (1,2-OXATHIOLANE,2,2-DIOXIDE)	230
SACCHARIN (1,2-BENZOISOTHIAZOLIN-3-ONE,1,1-DIOXIDE)	231
METHYL-2-METHYLTHIO-PROPIONALDEHYDE-O-(METHYLCARBONYL)OXIME(2-)	232-233
METHYOMYL	232-233
HEXACHLOROPROPENE [2]	234
PENTACHLORONITROBENZENE (PCNB)	235-239
DIALLATE (S-(2,3-DICHLOROALLYL)DIISOPROPYL THIOCARBAMATE)	235-239
ETHYLENEIMINE (AZIRIDINE)	235-239
ARAMITE	235-239
DIMETHOATE	235-239
TRICHLOROPHENOXYACETIC ACID (2,4,5-) (2,4,5-T)	240-241
TRICHLOROPHENOXYPROPIONIC ACID (2,4,5-) (2,4,5-TP) (SILVEX)	240-241
tris(2,3-DIBROMOPROPYL)PHOSPHATE	242
METHYLAZIRIDINE (2-) (1,2-PROPYLENIMINE)	243-244
METHOXYCHLOR	243-244
BRUCINE (STRYCHNIDIN-10-ONE,2,3-DIMETHOXY-)	245-248
KEPONE	245-246
ISOSAFROLE (1,2-METHYLENEDIOXY-4-ALLYLBENZENE)	247-249
SAFROLE (1,2-METHYLENE-4-ALLYLBENZENE)	247-249
tris(1-AZRIDINYL) PHOSPHINE SULFIDE	247-249
DIMETHOXYBENZIDINE (3,3'-)	250
DIPHENYLHYDRAZINE (1,2-)	251
O,O-DIETHYLPHOSPHORIC ACID,O-p-NITROPHENYL ESTER	252

EPA United States Environmental Protection Agency

National Environmental Publications Information

Basic Search - Results Image

Search publications for

4. 625689019 Handbook: Guidance on Setting Permit Conditions and Reporting Trial Burn Results: Volume II of the Hazardous Waste Incineration Guidance Series

Next Page | Previous Page | Enlarge Image | Shrink Image

Table D-1. Principal Hazardous Organic Constituent Thermal Stability Index (continued)

Principal Hazardous Organic Constituent	Rank
CLASS 6	
n-BUTYLBENZYL PHTHALATE [2]	253
O,O-DIETHYL-O-2-PYRAZINYL PHOSPHOROTHIOATE	254
DIMETHYLAMINOAZOBENZENE	255
DIETHYL PHTHALATE	256-257
O,O-DIETHYL-S-METHYL ESTER OF PHOSPHORIC ACID	256-257
O,O-DIETHYL S-[(ETHYLTHIO)METHYL]ESTER OF PHOSPHORODITHIOIC ACID	258-259
CITRUS RED No. 2 {2-NAPHTHOL,1-[(2,5-DIMETHOXYPHENYL)AZO]}	258-259
TRYPAN BLUE	260
ETHYL METHANESULFONATE {METHANESULFONIC ACID, ETHYL ESTER}	261-265
DISULFOTON	261-265
DIISOPROPYLFLUOROPHOSPHATE {DFP}	261-265
O,O,O-TRIETHYL PHOSPHOROTHIOATE	261-265
Di-n-BUTYL PHTHALATE	261-265
PARALDEHYDE {2,4,6-TRIMETHYL-1,3,5-TRIOXANE} [5]	266
Di-n-OCTYL PHTHALATE [2]	267
OCTAMETHYLPYROPHOSPHORAMIDE {OCTAMETHYLDIPHOSPHORAMIDE}	268
bis(2-ETHYLHEXYL)PHTHALATE	269-270
METHYLTHIOURACIL	269-270
PROPYLTHIOURACIL	271
CLASS 7	
STRYCHNINE {STRYCHNIDIN-10-ONE}	272
CYCLOPHOSPHAMIDE	273-276
NICOTINE {(S)-3-[1-METHYL-2-PYRROLIDINYL]PYRIDINE}	273-276
RESERPINE	273-276
TOLUIDINE HYDROCHLORIDE {2-METHYL-BENZENAMINE HYDROCHLORIDE}	273-276
TOLYLENE DIISOCYANATE {1,3-DIISOCYANATOMETHYLBENZENE}	277
ENDRIN	278
BUTANONE PEROXIDE (2-) {METHYL ETHYL KETONE, PEROXIDE}	279
TETRAETHYLPYROPHOSPHATE	280
NITROGLYCERINE {TRINITRATE-1,2,3-PROPANETRIOL} [6]	281
TETRAETHYLDITHIOPYROPHOSPHATE	282
ETHYLENEbisDITHIOCARBAMIC ACID	283
TETRANITROMETHANE [5]	284
URACIL MUSTARD {5-[bis(2-CHLOROETHYL)AMINO]URACIL}	285
ACETYL-2-THIOUREA (1-) {ACETAMIDE,N-[AMINOTHIOXOMETHYL]-}	286-290
CHLOROPHENYL THIOUREA (1-) {THIOUREA,[2-CHLOROPHENYL]-}	286-290
N-PHENYLTHIOUREA	286-290
NAPHTHYL-2-THIOUREA (1-) {THIOUREA,1-NAPHTHALENYL-}	286-290
THIOUREA {THIOCARBAMIDE}	286-290
DAUNOMYCIN	291-292
ETHYLENE THIOUREA {2-IMIDAZOLIDINETHIONE}	291-292
THIOSEMICARBAZIDE {HYDRAZINECARBOTHIOAMIDE}	293-294
MELPHALAN {ALANINE,3-[p-bis(2-CHLOROETHYL)AMINO]PHENYL-,L-}	293-294
DITHIOBIURET [2,4-] {THIOIMIDODICARBONIC DIAMIDE}	295-296
THIURAM {bis[DIMETHYLTHIOCARBAMOYL]DISULFIDE}	295-296
AZASERINE {L-SERINE,DIAZOACETATE[ESTER]}	297
HEXAETHYL TETRAPHOSPHATE	298
NITROGEN MUSTARD N-OXIDE	299-300
NITROQUINOLINE-1-OXIDE (4-)	299-300
CYCASIN {beta-D-GLUCOPYRANOSIDE,[METHYL-ONN-AZOXY]METHYL-}	301

EPA United States Environmental Protection Agency

National Environmental Publications Information

Basic Search - Results Image

Search publications for

4. 625689019 Handbook: Guidance on Setting Permit Conditions and Reporting Trial Burn Results: Volume II of the Hazardous Waste Incineration Guidance Series

Next Page | Previous Page | Enlarge Image | Shrink Image

Table D-1. Principal Hazardous Organic Constituent Thermal Stability Index (continued)

Principal Hazardous Organic Constituent	Rank
STREPTOZOTOCIN	302
N-METHYL-N'-NITRO-N-NITROSOGUANIDINE	303-318
N-NITROSO-DI-ETHANOLAMINE ([2,2'-NITROSOIMINO]bisETHANOL)	303-318
N-NITROSO-DI-N-BUTYLAMINE (N-BUTYL-N-NITROSO-1-BUTANAMINE)	303-318
N-NITROSO-N-ETHYLUREA (N-ETHYL-N-NITROSOCARBAMIDE)	303-318
N-NITROSO-N-METHYLUREA (N-METHYL-N-NITROSOCARBAMIDE)	303-318
N-NITROSO-N-METHYLURETHANE	303-318
N-NITROSODIETHYLAMINE (N-ETHYL-N-NITROSOETHANAMINE)	303-318
N-NITROSODIMETHYLAMINE (DIMETHYLNITROSAMINE)	303-318
N-NITROSOMETHYLETHYLAMINE (N-METHYL-N-NITROSOETHANAMINE)	303-318
N-NITROSOMETHYLVINYLAMINE (N-METHYL-N-NITROSOETHENAMINE)	303-318
N-NITROSOMORPHOLINE	303-318
N-NITROSONORNICOTINE	303-318
N-NITROSOPIPERIDINE (HEXAHYDRO-N-NITROSOPYRIDINE)	303-318
N-NITROSOSARCOSINE	303-318
NITROSOPYRROLIDINE (N-NITROSOTETRAHYDROPYRROLE)	303-318
DI-n-PROPYLNITROSAMINE (N-NITROSO-DI-n-PROPYLAMINE)	303-318
OXABICYCLO[2.2.1]HEPTANE-2,3-DICARBOXYLIC ACID (7-) (ENDOTHAL)	319
ENDOSULFAN	320

FOOTNOTES:

1. UNITS OF TEMPERATURE ARE DEGREES CELSIUS.
2. BOLDFACE INDICATES COMPOUND THERMAL STABILITY IS "EXPERIMENTALLY EVALUATED" (RANKING BASED ON UDRI EXPERIMENTAL DATA COUPLED WITH REACTION KINETIC THEORY).
3. NON-APPENDIX VIII COMPOUND.
4. N.O.S. LISTING; RANKING IS PRESENTED BASED ON EITHER UDRI OR LITERATURE EXPERIMENTAL DATA COUPLED WITH REACTION KINETIC THEORY.
5. *ITALICS* INDICATE COMPOUND THERMAL STABILITY IS RANKED BASED ON LITERATURE EXPERIMENTAL DATA COUPLED WITH REACTION KINETIC THEORY.

EPA United States Environmental Protection Agency

National Environmental Publications Information

Basic Search - Results Image

Search publications for

4. 625689019 Handbook: Guidance on Setting Permit Conditions and Reporting Trial Burn Results: Volume II of the Hazardous Waste Incineration Guidance Series

Next Page | Previous Page | Enlarge Image | Shrink Image

Table D-2. Principal Hazardous Organic Constituent Thermal Stability Index - Alphabetized

Principal Hazardous Organic Constituent	Rank
ACETONITRILE (ETHANENITRILE) [2]	17-18
ACETONYLBENZYL-4-HYDROXYCOUMARIN (3-alpha-) (WARFARIN)	98-99
ACETOPHENONE (ETHANONE, 1-PHENYL-) [2]	85-88
ACETYL CHLORIDE (ETHANOYL CHLORIDE) [2]	92-97
ACETYL-2-THIOUREA (1-) (ACETAMIDE,N-[AMINOTHIOXOMETHYL]-)	288-290
ACETYLAMINOFLUORENE (2-) (ACETAMIDE,N-[9H-FLUOREN-2-YL]-)	68-77
ACROLEIN (2-PROPENAL)	106-107
ACRYLAMIDE (2-PROPENAMIDE)	60-64
ACRYLONITRILE (2-PROPENENITRILE) [2]	20
AFLATOXINS	200
ALDRIN	162-164
ALLYL ALCOHOL (2-PROPEN-1-OL)	116-118
AMINOBIPHENYL (4-) ([1,1' BIPHENYL]-4-AMINE)	61
AMITROLE (1H-1,2,4-TRIAZOL-3-AMINE)	208-209
ANILINE (BENZENAMINE)	46-50
ARAMITE	235-239
AURAMINE	180-181
AZASERINE (L-SERINE,DIAZOACETATE(ESTER))	297
BENZAL CHLORIDE (ALPHA, ALPHA-DICHLOROTOLUENE) [2]	168-173
BENZANTHRACENE (1,2-) (BENZ[a]ANTHRACENE)	8
BENZENE [2]	3
BENZENETHIOL (THIOPHENOL) [2]	110
BENZIDINE ([1,1'-BIPHENYL]-4,4' DIAMINE)	60-64
BENZOQUINONE (1,4-CYCLOHEXADIENEDIONE)	89-91
BENZOTRICHLORIDE (TRICHLOROMETHYLBENZENE)	195-196
BENZO[a]PYRENE (1,2-BENZOPYRENE)	11
BENZO[b]FLUORANTHENE (2,3-BENZOFLUORANTHENE)	6
BENZO[j]FLUORANTHENE (7,8-BENZOFLUORANTHENE)	7
BENZYL CHLORIDE (CHLOROMETHYLBENZENE) [2]	127-130
BENZ[c]ACRIDINE (3,4-BENZACRIDINE)	86-88
bis(2-CHLOROETHOXY)METHANE	189-192
bis(2-CHLOROETHYL)ETHER [2]	183-186
bis(2-CHLOROISOPROPYL)ETHER	227-228
bis(2-ETHYLHEXYL)PHTHALATE	269-270
bis(CHLOROMETHYL)ETHER (METHANE-OXYbis[2-CHLORO-])	222-223
BROMOACETONE (1-BROMO-2-PROPANONE)	136-140
BROMOFORM (TRIBROMOMETHANE) [2]	202-203
BROMOMETHANE (METHYL BROMIDE) [2]	31-33
BROMOPHENYL PHENYL ETHER (4-) (BENZENE,1-BROMO-4-PHENOXY-)	226
BRUCINE (STRYCHNIDIN-10-ONE,2,3-DIMETHOXY-)	245-246
BUTANONE PEROXIDE (2-) (METHYL ETHYL KETONE, PEROXIDE)	279
BUTYL-4,6-DINITROPHENOL (2-sec-) (DNBP)	187-188
CHLORAL (TRICHLOROACETALDEHYDE)	189-192
CHLORAMBUCIL	142
CHLORDANE (ALPHA AND GAMMA ISOMERS)	221
CHLORO-1,3-BUTADIENE (2-) (CHLOROPRENE)	68-77
CHLORO-2,3-EPOXYPROPANE (1-) (OXIRANE,2-CHLOROMETHYL-)	163-166
CHLOROACETALDEHYDE	166-167
CHLOROANILINE (CHLOROBENZENAMINE)	37
CHLOROBENZENE [2]	19
CHLOROBENZILATE	204-207
CHLOROCRESOL (4-CHLORO-3-METHYLPHENOL)	118-119

EPA United States Environmental Protection Agency

National Environmental Publications Information

Basic Search - Results Image

Search publications for

4. 625689019 Handbook: Guidance on Setting Permit Conditions and Reporting Trial Burn Results: Volume II of the Hazardous Waste Incineration Guidance Series

Next Page | Previous Page | Enlarge Image | Shrink Image

Table D-2. Principal Hazardous Organic Constituent Thermal Stability Index - Alphabetized (continued)

Principal Hazardous Organic Constituent	Rank
CHLORODIFLUOROMETHANE [2] [4]	151-153
CHLOROETHANE (ETHYL CHLORIDE) [4] [5]	128
CHLOROETHYLVINYLETHER (2-) (ETHENE,[2-CHLOROETHOXY]-) [2]	211-213
CHLOROMETHANE (METHYL CHLORIDE) [2]	29-30
CHLOROMETHYLMETHYL ETHER (CHLOROMETHOXYMETHANE)	218-220
CHLORONAPHTHALENE (1-) [2]	21-22
CHLOROPHENOL (2-)	102
CHLOROPHENYL THIOUREA (1-) (THIOUREA,[2-CHLOROPHENYL]-)	286-290
CHLOROPROPENE (3-) (ALLYL CHLORIDE) [2]	120
CHLOROPROPIONITRILE (3-) (3-CHLOROPROPANENITRILE) [2]	143-144
CHRYSENE (1,2-BENZPHENANTHRENE)	10
CITRUS RED No. 2 (2-NAPHTHOL,1-[(2,5-DIMETHOXYPHENYL)AZO])	258-259
CRESOL (1,2-) (METHYLPHENOL)	104-105
CRESOL (1,3-) (METHYLPHENOL)	103
CRESOL (1,4-) (METHYLPHENOL) [2]	104-105
CROTONALDEHYDE (2-BUTENAL) [2]	113-115
CYANOGEN BROMIDE (BROMINE CYANIDE)	23-24
CYANOGEN CHLORIDE (CHLORINE CYANIDE)	17-18
CYANOGEN (ETHANEDINITRILE)	1
CYCASIN (beta-D-GLUCOPYRANOSIDE,[METHYL-ONN-AZOXY]METHYL-)	301
CYCLOHEXYL-4,6-DINITROPHENOL (2-)	187-188
CYCLOPHOSPHAMIDE	273-275
DAUNOMYCIN	291-292
DDD (DICHLORODIPHENYLDICHLOROETHANE)	145-146
DDE(1,1-DICHLORO-2,2-BIS(4-CHLOROPHENYLETHYLENE)	38
DDT (DICHLORODIPHENYLTRICHLOROETHANE)	175-178
Di-n-BUTYL PHTHALATE	261-265
Di-n-OCTYL PHTHALATE [2]	267
Di-n-PROPYLNITROSAMINE (N-NITROSO-Di-n-PROPYLAMINE)	303-318
DIALLATE (S-(2,3-DICHLOROALLYL)DIISOPROPYL THIOCARBAMATE)	235-239
DIBENZO[a,e]PYRENE (1,2,4,5-DIBENZOPYRENE)	16
DIBENZO[a,h]PYRENE (1,2,5,6-DIBENZOPYRENE)	14
DIBENZO[a,i]PYRENE (1,2,7,8-DIBENZOPYRENE)	15
DIBENZO[c,g]CARBAZOLE (7H-) (3,4,6,8-DIBENZCARBAZOLE)	100-101
DIBENZ[a,h]ACRIDINE (1,2,5,6-DIBENZACRIDINE)	92-97
DIBENZ[a,h]ANTHRACENE (1,2,5,6-DIBENZANTHRACENE)	12
DIBENZ[a,j]ACRIDINE (1,2,7,8-DIBENZACRIDINE)	92-97
DIBROMO-3-CHLOROPROPANE (1,2-)	214
DIBROMOETHANE (1,2-) (ETHYLENE DIBROMIDE)	199
DIBROMOMETHANE (METHYLENE BROMIDE) [2]	127-130
DICHLORO-1-PROPANOL (2,3-)	168-173
DICHLORO-2-BUTENE (1,4-)	138-140
DICHLORO-2-PROPANOL (1,1-)	145-146
DICHLORO-2-PROPANOL (1,3-)	147
DICHLOROBENZENE (1,2-DICHLOROBENZENE) [2]	23-24
DICHLOROBENZENE (1,3-DICHLOROBENZENE) [2]	25
DICHLOROBENZENE (1,4-DICHLOROBENZENE)	21-22
DICHLOROBENZIDINE (3,3'-)	67
DICHLORODIFLUOROMETHANE [2]	85-88
DICHLOROETHANE (1,1-) (ETHYLIDENE DICHLORIDE) [5]	175-178
DICHLOROETHANE (1,2-) [2]	131
DICHLOROETHENE (1,1-) [2]	42-44

EPA United States Environmental Protection Agency

National Environmental Publications Information

Basic Search - Results Image

Search publications for

4. 625689019 Handbook: Guidance on Setting Permit Conditions and Reporting Trial Burn Results: Volume II of the Hazardous Waste Incineration Guidance Series

Next Page | Previous Page | Enlarge Image | Shrink Image

Table D-2. Principal Hazardous Organic Constituent Thermal Stability Index - Alphabetized (continued)

Principal Hazardous Organic Constituent	Rank
DICHLOROETHENE (trans-1,2-) [2]	54
DICHLOROFLUOROMETHANE [2] [4]	154-157
DICHLOROMETHANE {METHYLENE CHLORIDE} [2]	55-66
DICHLOROPHENOL (2,4-)	113-115
DICHLOROPHENOL (2,6-)	113-115
DICHLOROPHENOXYACETIC ACID (2,4-) {2,4-D}	211-213
DICHLOROPROPANE (1,1-) [5]	182
DICHLOROPROPANE (1,2-) {PROPYLENE DICHLORIDE} [5]	179
DICHLOROPROPANE (1,3-) [5]	185
DICHLOROPROPANE (2,2-) [5]	224
DICHLOROPROPENE (1,1-) [2]	81-84
DICHLOROPROPENE (2,3-)	127-130
DICHLOROPROPENE (3,3-)	135
DICHLOROPROPENE (cis-1,3-)	121-125
DICHLOROPROPENE (trans-1,2-)	89-91
DICHLOROPROPENE (trans-1,3-)	121-125
DIELDRIN	161-163
DIEPOXYBUTANE (1,2,3,4-) {2,2'-BIOXIRANE}	194
DIETHYL PHTHALATE	256-257
DIETHYLSTILBESTEROL	108-109
DIHYDROSAFROLE {1,2-METHYLENEDIOXY-4-PROPYLBENZENE}	227-228
DIHYDROXY-ALPHA-[METHYLAMINO]METHYL BENZYL ALCOHOL (3,4-)	106-107
DIISOPROPYLFLUOROPHOSPHATE {DFP}	261-265
DIMETHOATE	235-239
DIMETHOXYBENZIDINE (3,3'-)	250
DIMETHYL PHTHALATE [2]	92-97
DIMETHYL-1-METHYLTHIO-2-BUTANONE,O-[(METHYLAMINO)-CARBONYL] OXIME (3,3-) {THIOFANOX}	218-220
DIMETHYLAMINOAZOBENZENE	255
DIMETHYLBENZIDINE (3,3'-)	76
DIMETHYLBENZ[a]ANTHRACENE (7,12-)	45
DIMETHYLCARBAMOYLCHLORIDE	175-178
DIMETHYLHYDRAZINE (1,1-) [5]	216-217
DIMETHYLHYDRAZINE (1,2-)	216-220
DIMETHYLPHENETHYLAMINE (alpha, alpha-)	80-84
DIMETHYLPHENOL (2,4-)	119
DINITROBENZENE (1,2-)	158-161
DINITROBENZENE (1,3-)	154-157
DINITROBENZENE (1,4-)	158-161
DINITROCRESOL (4,6-) {PHENOL,2,4-DINITRO-6-METHYL-}	189-192
DINITROPHENOL (2,4-)	183-186
DINITROTOLUENE (2,4-)	168-173
DINITROTOLUENE (2,6-)	188-173
DIOXANE (1,4-) {1,4-DIETHYLENE OXIDE} [2]	141
DIPHENYLAMINE {N-PHENYLBENZENAMINE}	42-44
DIPHENYLHYDRAZINE (1,2-)	251
DISULFOTON	261-265
DITHIOBIURET (2,4-) {THIOIMIDODICARBONIC DIAMIDE}	295-298
ENDOSULFAN	320
ENDRIN	278
ETHYL CARBAMATE {URETHAN} {CARBAMIC ACID, ETHYL ESTER}	204-207
ETHYL CYANIDE {PROPIONITRILE} [2]	89-91
ETHYL METHACRYLATE {2-PROPENOIC ACID, 2-METHYL-,ETHYL ESTER}	204-207

EPA United States Environmental Protection Agency

National Environmental Publications Information

Basic Search - Results Image

Search publications for

4. 625689019 Handbook: Guidance on Setting Permit Conditions and Reporting Trial Burn Results: Volume II of the Hazardous Waste Incineration Guidance Series

Next Page | Previous Page | Enlarge Image | Shrink Image

Table D-2. Principal Hazardous Organic Constituent Thermal Stability Index - Alphabetized (continued)

Principal Hazardous Organic Constituent	Rank
ETHYL METHANESULFONATE (METHANESULFONIC ACID, ETHYL ESTER)	261-265
ETHYLENE OXIDE (OXIRANE) [5]	174
ETHYLENE THIOUREA (2-IMIDAZOLIDINETHIONE)	291-292
ETHYLENEbisDITHIOCARBAMIC ACID	283
ETHYLENEIMINE (AZIRIDINE)	235-239
FLUORANTHENE (BENZO[j,k]FLUORENE)	6
FLUOROACETAMIDE (2-)	55-56
FLUOROACETIC ACID	42-44
FORMALDEHYDE (METHYLENE OXIDE)	46-50
FORMIC ACID (METHANOIC ACID)	39-40
GLYCIDYALDEHYDE (1-PROPANOL-2,3-EPOXY)	175-178
HEPTACHLOR	180-181
HEPTACHLOR EPOXIDE	193
HEXACHLOROBENZENE [2]	31-33
HEXACHLOROBUTADIENE (trans-1,3) [2]	92-97
HEXACHLOROCYCLOHEXANE (LINDANE) [2]	151-153
HEXACHLOROCYCLOPENTADIENE	168-173
HEXACHLOROETHANE [2]	202-203
HEXACHLOROPHENE (2,2'-METHYLENEbis(3,4,6-TRICHLOROPHENOL))	138-140
HEXACHLOROPROPENE [2]	234
HEXAETHYL TETRAPHOSPHATE	266
HYDRAZINE (DIAMINE)	127-130
HYDROGEN CYANIDE (HYDROCYANIC ACID) [2]	2
INDENO(1,2,3-cd)PYRENE (1,10-(1,2-PHENYLENE)PYRENE)	13
IODOMETHANE (METHYL IODIDE)	210
ISOBUTYL ALCOHOL (2-METHYL-1-PROPANOL) [2]	112
ISODRIN	162-164
ISOSAFROLE (1,2-METHYLENEDIOXY-4-ALLYLBENZENE)	247-249
KEPONE	245-246
LASIOCARPINE	204-207
MALEIC ANHYDRIDE (2,5-FURANDIONE)	98-99
MALEIC HYDRAZIDE (1,2-DIHYDRO-3,6-PYRIDAZINEDIONE)	225
MALONONITRILE (PROPANEDINITRILE)	46-50
MELPHALAN (ALANINE,3-[p-bis(2-CHLOROETHYL)AMINO]PHENYL-,L-)	293-294
METHACRYLONITRILE (2-METHYL-2-PROPENENITRILE) [2]	86-88
METHAPYRILENE	195-198
METHOXYCHLOR	243-244
METHYL CHLOROCARBONATE (CARBONOCHLORIDIC ACID, METHYL ESTER)	46-50
METHYL ETHYL KETONE (2-BUTANONE) [2]	108-109
METHYL HYDRAZINE [5]	197-198
METHYL ISOCYANATE (METHYLCARBYLAMINE)	46-50
METHYL METHACRYLATE (2-PROPENOIC ACID, 2-METHYL-, METHYL ESTER)	60-64
METHYL METHANESULFONATE (METHANESULFONIC ACID, METHYL ESTER)	229
METHYL PARATHION	149-150
METHYL-2-METHYLTHIO-PROPIONALDEHYDE-O-(METHYLCARBONYL)OXIME(2-)	232-233
METHYLACTONITRILE (2-) (PROPANENITRILE,2-HYDROXY-2-METHYL)	116-118
METHYLAZIRIDINE (2-) (1,2-PROPYLENIMINE)	243-244
METHYLCHOLANTHRENE (3-)	58
METHYLENE BIS(2-CHLOROANILINE) (4,4-)	211-213
METHYLTHIOURACIL	269-270
METHYOMYL	232-233
MUSCIMOL (5-AMINOMETHYL-3-ISOAZOTOL)	208-209

EPA United States Environmental Protection Agency

National Environmental Publications Information

Basic Search - Results Image

Search publications for

4. 625689019 Handbook: Guidance on Setting Permit Conditions and Reporting Trial Burn Results: Volume II of the Hazardous Waste Incineration Guidance Series

Next Page | Previous Page | Enlarge Image | Shrink Image

Table D-2. Principal Hazardous Organic Constituent Thermal Stability Index - Alphabetized (continued)

Principal Hazardous Organic Constituent	Rank
MUSTARD GAS (bis(2-CHLOROETHYL)-SULFIDE)	132-134
N,N-BIS(2-CHLOROETHYL)2-NAPHTHYLAMINE (CHLORNAPHAZINE)	132-134
N,N-DIETHYLHYDRAZINE (1,2-DIETHYLHYDRAZINE)	216-217
n-BUTYLBENZYL PHTHALATE [2]	253
N-METHYL-N'-NITRO-N-NITROSOGUANIDINE	303-318
N-NITROSO-DI-ETHANOLAMINE ([2,2'-NITROSOIMINO]bisETHANOL)	303-318
N-NITROSO-DI-N-BUTYLAMINE (N-BUTYL-N-NITROSO-1-BUTANAMINE)	303-318
N-NITROSO-N-ETHYLUREA (N-ETHYL-N-NITROSOCARBAMIDE)	303-318
N-NITROSO-N-METHYLUREA (N-METHYL-N-NITROSOCARBAMIDE)	303-318
N-NITROSO-N-METHYLURETHANE	303-318
N-NITROSODIETHYLAMINE (N-ETHYL-N-NITROSOETHANAMINE)	303-318
N-NITROSODIMETHYLAMINE (DIMETHYLNITROSAMINE)	303-318
N-NITROSOMETHYLETHYLAMINE (N-METHYL-N-NITROSOETHANAMINE)	303-318
N-NITROSOMETHYLVINYLAMINE (N-METHYL-N-NITROSOETHENAMINE)	303-318
N-NITROSOMORPHOLINE	303-318
N-NITROSONORNICOTINE	303-318
N-NITROSOPIPERIDINE (HEXAHYDRO-N-NITROSOPYRIDINE)	303-318
N-NITROSOSARCOSINE	303-318
N-PHENYLTHIOUREA	286-290
n-PROPYLAMINE (1-PROPANAMINE)	79
NAPHTHALENE [2]	5
NAPHTHOQUINONE (1,4-) (1,4-NAPHTHALENEDIONE)	92-97
NAPHTHYL-2-THIOUREA (1-) (THIOUREA,1-NAPHTHALENYL-)	286-290
NAPHTHYLAMINE (1-)	52-53
NAPHTHYLAMINE (2-)	52-53
NICOTINE ((S)-3-[1-METHYL-2-PYRROLIDINYL]PYRIDINE)	273-278
NITROANILINE (4-NITROBENZENAMINE)	154-157
NITROBENZENE [2]	143
NITROGEN MUSTARD	132-134
NITROGEN MUSTARD N-OXIDE	299-300
NITROGLYCERINE (TRINITRATE-1,2,3-PROPANETRIOL) [5]	281
NITROPHENOL (4-)	149-150
NITROQUINOLINE-1-OXIDE (4-)	299-300
NITROSOPYRROLIDINE (N-NITROSOTETRAHYDROPYRROLE)	303-318
NITROTOLUIDINE (5-) (BENZENAMINE,2-METHYL-5-NITRO-)	165-167
O,O,O-TRIETHYL PHOSPHOROTHIOATE	261-265
O,O-DIETHYL S-[(ETHYLTHIO)METHYL]ESTER OF PHOSPHORODITHIOIC ACID	258-259
O,O-DIETHYL-O-2-PYRAZINYL PHOSPHOROTHIOATE	254
O,O-DIETHYL S-METHYL ESTER OF PHOSPHORIC ACID	256-257
O,O-DIETHYLPHOSPHORIC ACID,O-p-NITROPHENYL ESTER	262
OCTAMETHYLPYROPHOSPHORAMIDE (OCTAMETHYLDIPHOSPHORAMIDE)	268
OXABICYCLO[2.2.1]HEPTANE-2,3-DICARBOXYLIC ACID (7-) (ENDOTHAL)	319
PARALDEHYDE (2,4,6-TRIMETHYL-1,3,5-TRIOXANE) [5]	269
PARATHION [5]	222-223
PENTACHLOROBENZENE [2]	31-33
PENTACHLOROETHANE [2]	154-157
PENTACHLORONITROBENZENE (PCNB)	235-239
PENTACHLOROPHENOL	151-153
PHENACETIN (N-[4-ETHOXYPHENYL]ACETAMIDE)	197-198
PHENOL (HYDROXYBENZENE)	100-101
PHENYLENEDIAMINE (1,2-) (BENZENEDIAMINE)	67-69
PHENYLENEDIAMINE (1,3-) (BENZENEDIAMINE)	67-69

EPA United States Environmental Protection Agency

National Environmental Publications Information

Basic Search - Results Image

Search publications for

4. 625689019 Handbook: Guidance on Setting Permit Conditions and Reporting Trial Burn Results: Volume II of the Hazardous Waste Incineration Guidance Series

Next Page | Previous Page | Enlarge Image | Shrink Image

Table D-2. Principal Hazardous Organic Constituent Thermal Stability Index - Alphabetized (continued)

Principal Hazardous Organic Constituent	Rank
PHENYLENEDIAMINE (1,4) (BENZENEDIAMINE)	67-69
PHOSGENE (CARBONYL CHLORIDE)	39-40
PHTHALIC ANHYDRIDE (1,2-BENZENEDICARBOXYLIC ACID ANHYDRIDE)	149-150
PICOLINE (2-) (PYRIDINE, 2-METHYL-)	81-84
PRONAMIDE (3,5-DICHLORO-N-[1,1-DIMETHYL-2-PROPYNYL] BENZAMIDE)	69-77
PROPANE SULFONE (1,3-) (1,2-OXATHIOLANE,2,2-DIOXIDE)	230
PROPYLTHIOURACIL	271
PROPYN-1-OL (2-) (PROPARGYL ALCOHOL)	65-66
PYRIDINE [2]	80
RESERPINE	273-276
RESORCINOL (1,3-BENZENEDIOL)	111
SACCHARIN (1,2-BENZOISOTHIAZOLIN-3-ONE,1,1-DIOXIDE)	231
SAFROLE (1,2-METHYLENE-4-ALLYLBENZENE)	247-249
STREPTOZOTOCIN	302
STRYCHNINE (STRYCHNIDIN-10-ONE)	272
SULFUR HEXAFLUORIDE [3]	4
TETRACHLOROBENZENE (1,2,3,5-TETRACHLOROBENZENE) [2] [4]	20
TETRACHLOROBENZENE (1,2,4,5-TETRACHLOROBENZENE)	29-30
TETRACHLORODIBENZO-p-DIOXIN (2,3,7,8-) (TCDD)	34
TETRACHLOROETHANE (1,1,1,2-) [2]	215
TETRACHLOROETHANE (1,1,2,2-) [2]	121-126
TETRACHLOROETHENE [2]	36
TETRACHLOROMETHANE (CARBONTETRACHLORIDE) [2]	136-140
TETRACHLOROPHENOL (2,3,4,6-)	136-140
TETRAETHYLDITHIOPYROPHOSPHATE	282
TETRAETHYLPYROPHOSPHATE	280
TETRANITROMETHANE [5]	284
THIOACETAMIDE (ETHANETHIOAMIDE)	81-84
THIOSEMICARBAZIDE (HYDRAZINECARBOTHIOAMIDE)	293-294
THIOUREA (THIOCARBAMIDE)	286-290
THIURAM (bis[DIMETHYLTHIOCARBAMOYL]DISULFIDE)	295-296
TOLUENE (METHYLBENZENE) [2]	35
TOLUENEDIAMINE (1,3-) (DIAMINOTOLUENE)	69-77
TOLUENEDIAMINE (1,4-) (DIAMINOTOLUENE)	69-77
TOLUENEDIAMINE (2,4-) (DIAMINOTOLUENE)	69-77
TOLUENEDIAMINE (2,6-) (DIAMINOTOLUENE)	69-77
TOLUENEDIAMINE (3,4-) (DIAMINOTOLUENE)	69-77
TOLUENEDIAMINE (3,5-) (DIAMINOTOLUENE)	69-77
TOLUIDINE HYDROCHLORIDE (2-METHYL-BENZENAMINE HYDROCHLORIDE)	273-276
TOLYLENE DIISOCYANATE (1,3-DIISOCYANATOMETHYLBENZENE)	277
TRICHLOROBENZENE (1,2,4-TRICHLOROBENZENE) [2]	26-27
TRICHLOROBENZENE (1,3,5-TRICHLOROBENZENE) [2] [4]	26-27
TRICHLOROETHANE (1,1,1-) (METHYL CHLOROFORM) [2]	201
TRICHLOROETHANE (1,1,2-) [2]	158-161
TRICHLOROETHENE [2]	41
TRICHLOROFLUOROMETHANE [2]	65-66
TRICHLOROMETHANE (CHLOROFORM) [2]	195-196
TRICHLOROMETHANETHIOL	189-192
TRICHLOROPHENOL (2,4,5-)	121-125
TRICHLOROPHENOL (2,4,6-)	121-125
TRICHLOROPHENOXYACETIC ACID (2,4,5-) (2,4,5-T)	240-241
TRICHLOROPHENOXYPROPIONIC ACID (2,4,5-) (2,4,5-TP) (SILVEX)	240-241

EPA United States Environmental Protection Agency

National Environmental Publications Information

Basic Search - Results Image

Search publications for

4. 625689019 Handbook: Guidance on Setting Permit Conditions and Reporting Trial Burn Results: Volume II of the Hazardous Waste Incineration Guidance Series

Next Page Previous Page Enlarge Image Shrink Image

Table D-2. Principal Hazardous Organic Constituent Thermal Stability Index - Alphabetized (continued)

Principal Hazardous Organic Constituent	Rank
TRICHLOROPROPANE (1,2,3-) [2]	168-173
TRICHLORO-(1,2,2)-TRIFLUOROETHANE (1,1,2) [2] [3]	81-84
TRINITROBENZENE (1,3,5-TRINITROBENZENE)	183-186
tris(1-AZRIDINYL) PHOSPHINE SULFIDE	247-249
tris(2,3-DIBROMOPROPYL)PHOSPHATE	242
TRYPAN BLUE	250
URACIL MUSTARD {6-[bis(2-CHLOROETHYL)AMINO]URACIL}	256
VINYL CHLORIDE (CHLOROETHENE)	60-64

FOOTNOTES:

1. UNITS OF TEMPERATURE ARE DEGREES CELSIUS.
2. BOLDFACE INDICATES COMPOUND THERMAL STABILITY IS "EXPERIMENTALLY EVALUATED" (RANKING BASED ON UDRI EXPERIMENTAL DATA COUPLED WITH REACTION KINETIC THEORY).
3. NON-APPENDIX VIII COMPOUND.
4. N.O.S. LISTING; RANKING IS PRESENTED BASED ON EITHER UDRI OR LITERATURE EXPERIMENTAL DATA COUPLED WITH REACTION KINETIC THEORY.
5. *ITALICS* INDICATE COMPOUND THERMAL STABILITY IS RANKED BASED ON LITERATURE EXPERIMENTAL DATA COUPLED WITH REACTION KINETIC THEORY.

EPA United States Environmental Protection Agency

National Environmental Publications Information

Basic Search - Results Image

Search publications for

4. 625689019 Handbook: Guidance on Setting Permit Conditions and Reporting Trial Burn Results: Volume II of the Hazardous Waste Incineration Guidance Series

Next Page | Previous Page | Enlarge Image | Shrink Image

Table D-3. Appendix VIII Thermal Stability Classes

Class	Compound Ranking	$T_{99}(2)$ Range
1	1-34	1,690-900
2	35-77	895-800
3	78-119	790-705
4	120-193	695-604
5	194-252	600-425
6	253-271	415-360
7	272-320	320-100

PB89 221 410

(1)

EPA/530-SW-89-048A

PB89221410

TREATMENT TECHNOLOGY BACKGROUND DOCUMENT

James R. Berlow, Chief
Treatment Technology Section

Jerry Vorbach
Project Manager

U.S. Environmental Protection Agency
Office of Solid Waste
401 M Street, S.W.
Washington, D.C. 20460

June 1989

REPRODUCED BY
U.S. DEPARTMENT OF COMMERCE
NATIONAL TECHNICAL
INFORMATION SERVICE
SPRINGFIELD, VA 22161

REPORT DOCUMENTATION PAGE	1. REPORT NO. EPA-530-SW-89-048A	2.	3. Recipient's Accession No. PB89-221410
4. Title and Subtitle TREATMENT TECHNOLOGY BACKGROUND DOCUMENT (3RD ORDS)			5. Report Date JUNE 1989
			6.
7. Author(s) BERLOW/VORBACH/DSW			8. Performing Organization Rept. No
9. Performing Organization Name and Address U.S. EPA Office of Solid Waste 401 M. Street SW Washington, DC 20460			10. Project/Task/Work Unit No.
			11. Contract(C) or Grant(G) No. (C) (G)
12. Sponsoring Organization Name and Address			13. Type of Report & Period Covered
			14.

15. Supplementary Notes

16. Abstract (Limit: 200 words)

This document, consisting of descriptions of 23 treatment technologies, includes information relevant to the use and understanding of the background documents for each group of listed hazardous wastes subject to the RCRA Land Ban restrictions. These treatment technology descriptions represent a revision to previously published versions. Typically the revisions made were editorial in nature. The reader should note that this document has not been peer reviewed.

17. Document Analysis a. Descriptors

b. Identifiers/Open-Ended Terms

c. COSATI Field/Group

18. Availability Statement RELEASE UNLIMITED	19. Security Class (This Report) UNCLASSIFIED	21. No. of Pages 0
	20. Security Class (This Page) UNCLASSIFIED	22. Price 0

(See ANSI-Z39.18) OPTIONAL FORM 272 (4-77) (Formerly NTIS-35)

REPRODUCED BY
U.S. DEPARTMENT OF COMMERCE
NATIONAL TECHNICAL INFORMATION SERVICE
SPRINGFIELD, VA. 22161

TREATMENT TECHNOLOGY BACKGROUND DOCUMENT

This document, consisting of descriptions of 23 treatment technologies, includes information relevant to the use and understanding of the background documents for each group of listed hazardous wastes subject to the RCRA "Land Ban" restrictions. These treatment technology descriptions represent a revision to previously published versions. Typically, the revisions made were editorial in nature. The reader should note that this document has not been peer reviewed.

New technology descriptions may be added to those included herein as appropriate to describe adequately technologies being considered for Best Demonstrated Available Technology (BDAT) selection for Third Third waste.

TABLE OF CONTENTS

1. ACID LEACHING 1-1

1.1 Applicability..... 1-1
1.2 Underlying Principles of Operation 1-1
1.3 Description of Acid Leaching Process..... 1-2
1.4 Waste Characteristics Affecting Performance (WCAPs).. 1-3
1.5 Design and Operating Parameters..... 1-5
1.6 References 1-7

2. CHEMICAL PRECIPITATION 2-1

2.1 Applicability..... 2-1
2.2 Underlying Principles of Operation 2-1
2.3 Description of Chemical Precipitation Process..... 2-3
2.4 Waste Characteristics Affecting Performance (WCAPs)... 2-8
2.5 Design and Operating Parameters..... 2-11
2.6 References 2-14

3. ELECTROLYTIC OXIDATION OF CYANIDE..... 3-1

3.1 Applicability..... 3-1
3.2 Underlying Principles of Operation 3-1
3.3 Description of Electrolytic Oxidation of Cyanide Process..... 3-2
3.4 Waste Characteristics Affecting Performance (WCAPs)... 3-3
3.5 Design and Operating Parameters..... 3-4
3.6 References 3-7

4. HEXAVALENT CHROMIUM REDUCTION..... 4-1

4.1 Applicability..... 4-1
4.2 Underlying Principles of Operation 4-1
4.3 Description of Hexavalent Chromium Reduction Process.. 4-2
4.4 Waste Characteristics Affecting Performance (WCAPs)... 4-4
4.5 Design and Operating Parameters..... 4-5
4.6 References 4-8

5. HIGH TEMPERATURE METALS RECOVERY..... 5-1

5.1 Applicability..... 5-1
5.2 Underlying Principles of Operation 5-2
5.3 Description of High Temperature Metals Recovery Process 5-2
5.4 Waste Characteristics Affecting Performance (WCAPs)... 5-5
5.5 Design and Operating Parameters..... 5-8
5.6 References 5-11

6. ION EXCHANGE 6-1

6.1 Applicability 6-1
6.2 Underlying Principles of Operation 6-1
6.3 Description of Ion Exchange Process 6-3
6.4 Waste Characteristics Affecting Performance (WCAPs) ... 6-5
6.5 Design and Operating Parameters 6-9
6.6 References 6-11

7. RETORTING 7-1

7.1 Applicability 7-1
7.2 Underlying Principles of Operation 7-1
7.3 Description of Retorting Process 7-3
7.4 Waste Characteristics Affecting Performance (WCAPs) ... 7-6
7.5 Design and Operating Parameters 7-8
7.6 References 7-10

8. STABILIZATION 8-1

8.1 Applicability 8-1
8.2 Underlying Principles of Operation 8-1
8.3 Description of Stabilization Process 8-3
8.4 Waste Characteristics Affecting Performance (WCAPs) ... 8-4
8.5 Design and Operating Parameters 8-6
8.6 References 8-9

9. AEROBIC BIOLOGICAL TREATMENT 9-1

9.1 Applicability 9-1
9.2 Underlying Principles of Operation 9-1
9.3 Description of Aerobic Biological Treatment Process ... 9-2
9.4 Waste Characteristics Affecting Performance (WCAPs) ... 9-8
9.5 Design and Operating Parameters 9-9
9.6 References 9-15

10. BATCH DISTILLATION 10-1

10.1 Applicability 10-1
10.2 Underlying Principles of Operation 10-1
10.3 Description of Batch Distillation 10-3
10.4 Waste Characteristics Affecting Performance (WCAPs) ... 10-5
10.5 Design and Operating Parameters 10-8
10.6 References 10-10

11. CRITICAL FLUID EXTRACTION 11-1

11.1 Applicability 11-1
11.2 Underlying Principles of Operation 11-1
11.3 Description of Critical Fluid Extraction Process 11-2
11.4 Waste Characteristics Affecting Performance (WCAPs) ... 11-3
11.5 Design and Operating Parameters 11-5
11.6 References 11-8

12. FRACTIONATION..... 12-1

12.1 Applicability..... 12-1
12.2 Underlying Principles of Operation 12-1
12.3 Description of Fractionation Process..... 12-3
12.4 Waste Characteristics Affecting Performance (WCAPs)... 12-6
12.5 Design and Operating Parameters..... 12-9
12.6 References 12-12

13. FUEL SUBSTITUTION..... 13-1

13.1 Applicability..... 13-1
13.2 Underlying Principles of Operation 13-4
13.3 Description of Fuel Substitution Process..... 13-5
13.4 Waste Characteristics Affecting Performance (WCAPs)... 13-8
13.5 Design and Operating Parameters..... 13-12
13.6 References 13-18

14. INCINERATION..... 14-1

14.1 Applicability..... 14-1
14.2 Underlying Principles of Operation 14-2
14.3 Description of Incineration Technologies..... 14-3
14.4 Waste Characteristics Affecting Performance (WCAPs)... 14-10
14.5 Design and Operating Parameters..... 14-14
14.6 References 14-21

15. SOLVENT EXTRACTION..... 15-1

15.1 Applicability..... 15-1
15.2 Underlying Principles of Operation 15-1
15.3 Description of Solvent Extraction..... 15-2
15.4 Waste Characteristics Affecting Performance (WCAPs)... 15-7
15.5 Design and Operating Parameters..... 15-9
15.6 References 15-12

16. STEAM STRIPPING..... 16-1

16.1 Applicability..... 16-1
16.2 Underlying Principles of Operation 16-1
16.3 Description of Steam Stripping Process..... 16-3
16.4 Waste Characteristics Affecting Performance (WCAPs)... 16-5
16.5 Design and Operating Parameters..... 16-8
16.6 References 16-11

17. THIN FILM EVAPORATION..... 17-1

17.1 Applicability..... 17-1
17.2 Underlying Principles of Operation 17-1
17.3 Description of Thin Film Evaporation Process..... 17-2
17.4 Waste Characteristics Affecting Performance (WCAPs)... 17-4
17.5 Design and Operating Parameters..... 17-7
17.6 References 17-9

18. CARBON ADSORPTION..... 18-1

18.1 Applicability..... 18-1
18.2 Underlying Principles of Operation 18-1
18.3 Description of Carbon Adsorption Process..... 18-3
18.4 Waste Characteristics Affecting Performance (WCAPs)... 18-6
18.5 Design and Operating Parameters..... 18-7
18.6 References 18-9

19. CHEMICAL OXIDATION..... 19-1

19.1 Applicability..... 19-1
19.2 Underlying Principles of Operation 19-2
19.3 Description of Chemical Oxidation Process..... 19-5
19.4 Waste Characteristics Affecting Performance (WCAPs)... 19-7
19.5 Design and Operating Parameters..... 19-9
19.6 References 19-13

20. POLISHING FILTRATION..... 20-1

20.1 Applicability..... 20-1
20.2 Underlying Principles of Operation 20-1
20.3 Description of Polishing Filtration Process..... 20-2
20.4 Waste Characteristics Affecting Performance (WCAPs)... 20-4
20.5 Design and Operating Parameters..... 20-5
20.6 References 20-8

21. SLUDGE FILTRATION..... 21-1

21.1 Applicability..... 21-1
21.2 Underlying Principles of Operation 21-1
21.3 Description of Sludge Filtration Process..... 21-2
21.4 Waste Characteristics Affecting Performance (WCAPs)... 21-3
21.5 Design and Operating Parameters..... 21-5
21.6 References 21-9

22. THERMAL DRYING..... 22-1

22.1 Applicability..... 22-1
22.2 Underlying Principles of Operation 22-1
22.3 Description of Thermal Drying Process..... 22-1
22.4 Waste Characteristics Affecting Performance (WCAPs)... 22-2
22.5 Design and Operating Parameters..... 22-4
22.6 References 22-6

23. WET AIR OXIDATION..... 23-1

23.1 Applicability..... 23-1
23.2 Underlying Principles of Operation 23-3
23.3 Description of Wet Air Oxidation Process..... 23-4
23.4 Waste Characteristics Affecting Performance (WCAPs)... 23-6
23.5 Design and Operating Parameters..... 23-8
23.6 References 23-11

LIST OF FIGURES

Figure No.		Page No.
2-1	Continuous Chemical Precipitation	2-4
2-2	Inclined Plate Settler	2-6
2-3	Circular Clarifiers	2-7
4-1	Continuous Hexavalent Chromium Reduction System	4-3
5-1	High Temperature Metals Recovery System	5-3
6-1	Schematic of Two Step Cation/Anion Exchange System	6-4
7-1	Retorting Process (without wastewater discharge)	7-4
7-2	Retorting Process (with wastewater discharge)	7-5
9-1	Activated Sludge	9-4
10-1	Batch Distillation	10-4
12-1	Fractionation Unit	12-4
14-1	Liquid Injection Incineration	14-4
14-2	Rotary Kiln Incineration	14-6
14-3	Fluidized Bed Incineration	14-7
14-4	Fixed Hearth Incineration	14-9
15-1	Two-Stage Mixed Settler Solvent Extraction System	15-4
15-2	Extraction Columns with Nonmechanical Agitation	15-6
16-1	Steam Stripping	16-4
17-1	Thin Film Evaporation	17-3
18-1	Carbon Adsorption	18-4
18-2	Plot of Breakthrough Curve	18-5
23-1	Wet Air Oxidation Process Flow Diagram	23-5

2699g

1. ACID LEACHING

1.1 Applicability

Acid leaching is a treatment technology used to treat wastes in solid or slurry form containing metal constituents that are soluble in a strong acid solution or can be converted by reaction with a strong acid to a soluble form. This process has been used to recover metals such as copper, nickel, silver, and cadmium from inorganic wastes generated in the primary metals and inorganic chemicals industries.

The acid leaching process is most effective with wastes having high (over 1,000 ppm) levels of metal constituents. Wastes containing lower levels of such contaminants are more difficult to process because the low metal concentrations require longer contact times.

1.2 Underlying Principles of Operation

Acid leaching is a technology that takes advantage of the enhanced solubilities of various metals in acid solutions. The process concentrates the constituent(s) leached by the acid solutions. These constituents can then be filtered to remove residual solids and neutralized to precipitate solids containing high concentrations of the constituents of interest, which can be further treated in metals recovery processes. Alternatively, the acid solutions can be electrolyzed to recover pure metals. An acid leaching system usually consists of a solid/liquid contacting unit followed by a solid/liquid separator. The most frequently used acids include sulfuric (H_2SO_4), hydrochloric (HCl), and nitric (HNO_3). Although any acidic pH can theoretically be used, acid leaching processes are normally run at a pH from 1 to 4.

1.3 Description of Acid Leaching Process

Acid leaching processes can be categorized into two major types: (a) treatment by percolation of the acid through the solids or (b) treatment by dispersion of the solids within the acid solution. Both treatments are followed by subsequent separation of the solids from the liquid. In both types of systems, sufficient acid must be supplied to keep the pH at the level needed to effectively leach the metals from the waste.

1.3.1 Percolation Processes

Percolation is typically conducted in batch tanks. Batch percolators are large tanks ranging in size up to 50,000 gallons. First, the solids are placed in the tank, and then acid is added. The acid percolates through the solids and drains out through screens or a porous medium in the tank bottom. Following treatment, the solids are removed and further treated using stabilization and/or land disposed.

1.3.2 Dispersed-Solids Processes

Acid leaching by dispersion of fine solids into the acid is performed in batch tanks. The untreated waste and the acid are mixed in the reaction tank to ensure effective contact between the solids and the acid. Following mixing, the suspension may be pumped to stirred holding tanks, where the leaching is allowed to proceed to completion. The treated solids are then usually separated from the acid by filtration and further treated using stabilization and/or land disposed.

1.4 Waste Characteristics Affecting Performance (WCAPs)

In determining whether acid leaching will achieve the same level of performance on an untested waste as on a previously tested waste and whether performance levels can be transferred, EPA examines the following waste characteristics: (a) the solid waste particle size, (b) the alkalinity of the waste, (c) the solubility of metal constituents in the acid, and (d) the concentration of leachable metals.

1.4.1 Solid Waste Particle Size

Both the solubility reaction rate of the acid with the hazardous metal constituents in the waste and the rate of transport of acid to and from the site of the hazardous constituents are affected by the size of the solid waste particles. The smaller the particles, the more rapidly they will leach because of the increased surface area of the waste that is exposed to the acid. If the particle size of the untested waste is greater than that for the tested waste, the system may not achieve the same performance. Grinding the untested waste may be required to reduce the particle size and achieve the same treatment performance, or it may be necessary to consider other, more applicable treatment technologies for treatment of the untested waste.

1.4.2 Alkalinity of the Waste

The neutralizing capacity (or alkalinity) of the waste solids affects the amount of acid that must be added to the waste in order to achieve and/or maintain the desired reactor pH. In addition to dissolving the waste contaminants, the acid will also dissolve some of the alkaline bulk

solids; therefore, highly alkaline wastes require more acid or a stronger acid to maintain pH during treatment. If the alkalinity in an untested waste is greater than that in a tested waste, the system may not achieve the same performance. Use of additional acid or a stronger acid may be required to compensate for the increased alkalinity and achieve the same treatment performance, or other, more applicable treatment technologies may need to be considered for treatment of the untested waste.

1.4.3 Solubility of the Metal Constituents in the Acid

The metal constituents must dissolve in the acid to form soluble salts for the process to be effective. Thus, the acid selected should be one that forms soluble salts for all of the constituents to be removed. If the solubility of a certain metal constituent(s) of concern in an untested waste is less than that of another constituent(s) of concern in a previously tested waste in the same acid, or less than the solubility of the same metal(s) tested with a different acid, the system may not achieve the same performance. Use of another acid may be required to increase the solubilities of the metal constituent(s) of concern and achieve the same treatment performance, or other, more applicable treatment technologies may need to be considered for treatment of the untested waste.

1.4.4 Concentration of Leachable Metals

The amount of leachable metals is a measure of the maximum fraction of the waste that can be expected to leach in the acid leaching system. A relatively low concentration of leachable metals implies that most of

the waste will remain in the solid or slurry waste residues (i.e., nonleachable). If the concentration of leachable metals in the untested waste is significantly less than that in the tested waste, the system may not achieve the same performance. Use of a higher concentration of acid or a stronger acid may be required to leach less-leachable components and achieve the same treatment performance, or other, more applicable treatment technologies may need to be considered for treatment of the untested waste.

1.5 Design and Operating Parameters

In assessing the effectiveness of the design and operation of an acid leaching system, EPA examines the following parameters: (a) the residence time, (b) the type and concentration of acid used, (c) the pH, and (d) the degree of mixing.

1.5.1 Residence Time

The extent of reaction and dissolution of the contaminants in the acid is directly related to the contact time. EPA monitors the residence time to ensure that sufficient time is provided to effectively leach the metal contaminants from the waste.

1.5.2 Type and Concentration of Acid Used

If the hazardous constituents to be removed in the acid leaching system are already present in the waste in soluble form, or are solubilized by pH reduction, then any acid that will reduce the pH to the desired value may be used. However, if chemical reaction is necessary to form soluble species, then the appropriate acid, as well as the

appropriate concentration of the acid, must be used to ensure effective leaching of the metal constituents. EPA examines the type and concentration of acid used to ensure that the acid solution selected is capable of effectively leaching the metal constituents from the waste.

1.5.3 pH

For dispersed solids systems, the feed of acid to the leaching reactor is based on pH monitoring and control because the reaction rate is highly pH dependent. Therefore, a pH should be determined, based on the residence time and amount of hazardous metal constituents in the waste, that provides for complete dissolution of metal constituents. For percolation systems, pH monitoring of the acid percolating through the tank (i.e., leaving the system) should ensure that enough acid is being added. EPA monitors the pH to ensure that the system is operating at the appropriate design conditions and to diagnose operational problems.

1.5.4 Degree of Mixing

Mixing provides greater contact between the acid and the solid waste particles, ensuring more rapid leaching of metal contaminants from the waste. The quantifiable degree of mixing is a complex assessment that includes, among other things, the amount of energy supplied, the length of time the material is mixed, and the related turbulence effects of the specific size and shape of the tank. This is beyond simple measurement. EPA, however, evaluates the degree of mixing qualitatively by considering whether mixing is provided and whether the type of mixing device is one that could be expected to achieve uniform mixing of the waste solution.

1.6 References

McCabe, L., and Smith, J. 1976. Unit operations of chemical engineering. 3rd ed., pp. 607-610. New York: McGraw-Hill Book Co.

Perry, R. H., and Chilton, C. H. 1973. Chemical engineers' handbook. 5th ed., pp. 19-41 to 19-43. New York: McGraw-Hill Book Co.

2. CHEMICAL PRECIPITATION

2.1 Applicability

Chemical precipitation is a treatment technology applicable to wastewaters containing a wide range of dissolved and other metals, as well as other inorganic substances such as fluorides. This technology removes these metals and inorganics from solution in the form of insoluble solid precipitates. The solids formed are then separated from the wastewater by settling, clarification, and/or polishing filtration.

For some wastewaters, such as chromium plating baths or plating baths containing cyanides, the metals exist in solution in a very soluble form. This solubility can be caused by the metal's oxidation state (for hexavalent chromium wastewaters) or by complexing of the metals (for high cyanide-containing wastewaters). In both cases, pretreatment, such as hexavalent chromium reduction or oxidation of the metal-cyanide complexes, may be required before the chemical precipitation process can be applied effectively.

2.2 Underlying Principles of Operation

The basic principle of operation of chemical precipitation is that metals and inorganics in wastewater are removed by the addition of a precipitating agent that converts the soluble metals and inorganics to insoluble precipitates. These precipitates are settled, clarified, and/or filtered out of solution, leaving a lower concentration of metals and inorganics in the wastewater. The principal precipitation agents used to convert soluble metal and inorganic compounds to less soluble

forms include: lime ($Ca(OH)_2$), caustic (NaOH), sodium sulfide (Na_2S), and, to a lesser extent, soda ash (Na_2CO_3), phosphate ($PO_4^{\equiv}$), and ferrous sulfide (FeS).

The solubility of a particular compound depends on the extent to which the electrostatic forces holding the ions of the compound together can be overcome. The solubility changes significantly with temperature, with most metal compounds becoming more soluble as the temperature increases. Additionally, the solubility is affected by other constituents present in the wastewater, including other ions and complexing agents. Regarding specific ionic forms, nitrates, chlorides, and sulfates are, in general, more soluble than hydroxides, sulfides, carbonates, and phosphates.

Once the soluble metal and inorganic compounds have been converted to precipitates, the effectiveness of chemical precipitation is determined by how successfully they are physically removed. Removal usually relies on a settling process; that is, a practicle of a specific size, shape, and composition will settle at a specific velocity, as described by Stokes' Law. For a batch system, Stokes' Law is a good predictor of settling time because the pertinent particle parameters essentially remain constant. In practice, however, settling time for a batch system is normally determined by empirical testing. For a continuous system, the theory of settling is complicated by such factors as turbulence, short-circuiting of the wastewater, and velocity gradients, which increases the importance of empirical tests to accurately determine appropriate settling times.

2.3 Description of Chemical Precipitation Process

The equipment and instrumentation required for chemical precipitation vary depending on whether the system is batch or continuous. Both systems are discussed below.

For a batch system, chemical precipitation requires a feed system for the treatment chemicals and a reaction tank where the waste can be treated and allowed to settle. When lime is used, it is usually added to the reaction tank in a slurry form. The supernatant liquid is generally analyzed before discharge to ensure that settling of precipitates is adequate.

For a continuous system, additional tanks are necessary, as well as the instrumentation to ensure that the system is operating properly. A schematic of a continuous chemical precipitation system is shown in Figure 2-1. In this system, wastewater is fed into an equalization tank where it is mixed to provide more uniformity, thus minimizing the variability in the type and concentration of constituents sent to the reaction tank.

Following equalization, the wastewater is pumped to a reaction tank where precipitating agents are added. This is done automatically by using instrumentation that senses the pH of the system for hydroxide precipitating agents, or the oxidation-reduction potential (ORP) for non-hydroxide precipitating agents, and then pneumatically adjusts the position of the treatment chemical feed valve until the design pH or ORP value is achieved. (The pH and ORP values are affected by the concentration of hydroxide and non-hydroxide precipitating agents,

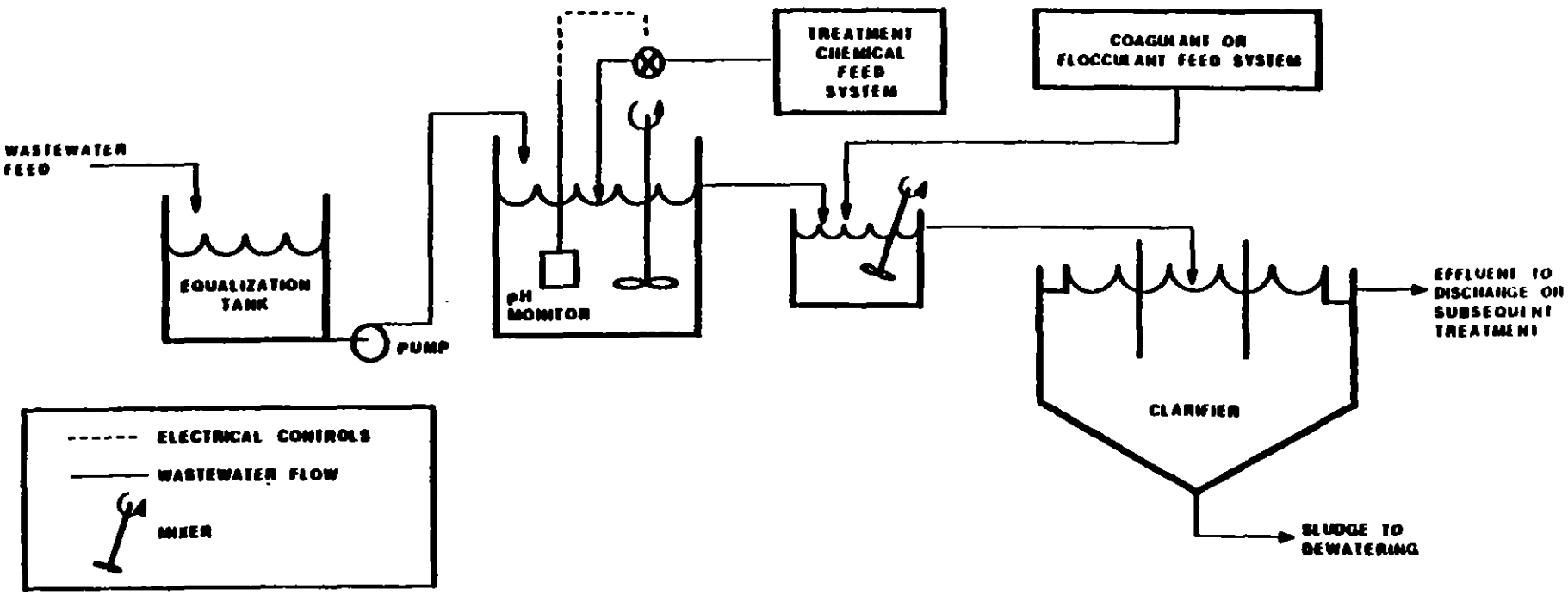

FIGURE 2-1 CONTINUOUS CHEMICAL PRECIPITATION

respectively, and are thus used as indicators of their concentrations in the reaction tank.)

In the reaction tank, the wastewater and precipitating agents are mixed to ensure commingling of the metal and inorganic constituents to be removed and the precipitating agents. In addition, effective dispersion of the precipitating agents throughout the tank is necessary to properly monitor and thereby control the amount added.

Following reaction of the wastewater with the stabilizing agents, coagulating or flocculating compounds are added to chemically assist the settling process. Coagulants and flocculants increase the particle size and density of the precipitated solids, both of which increase the rate of settling. The coagulant or flocculating agent that best improves settling characteristics varies depending on the particular precipitates to be settled.

Settling can be conducted in a large tank by relying solely on gravity or can be mechanically assisted through the use of a circular clarifier or an inclined plate settler. Schematics of the two settling systems are shown in Figures 2-2 and 2-3. Following the addition of coagulating or flocculating agents, the wastewater is fed to a large settling tank, circular clarifier, or inclined plate settler where the precipitated solids are removed. These solids are generally further treated in a sludge filtration system to dewater them prior to disposal. This technology is discussed in Section 21 of this report.

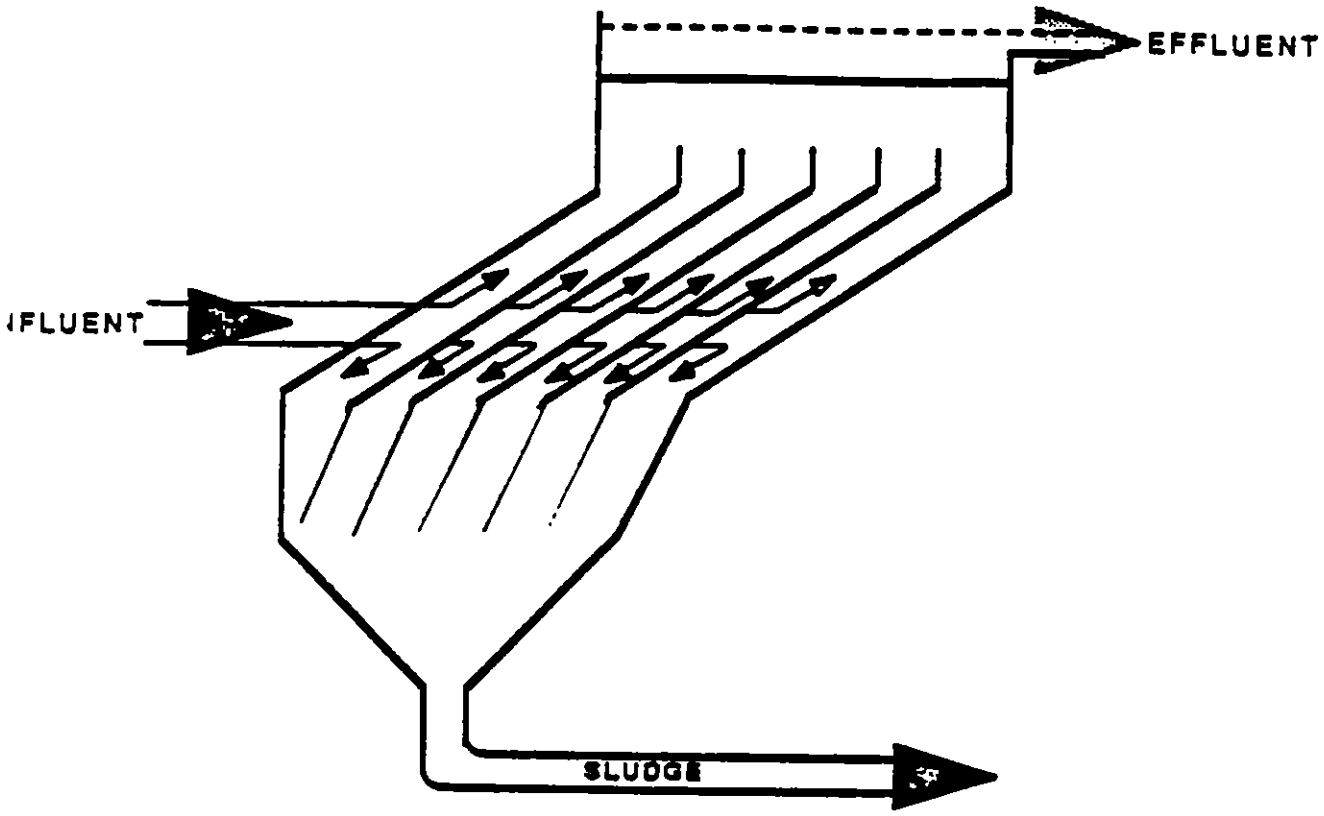

FIGURE 2-2
INCLINED PLATE SETTLER

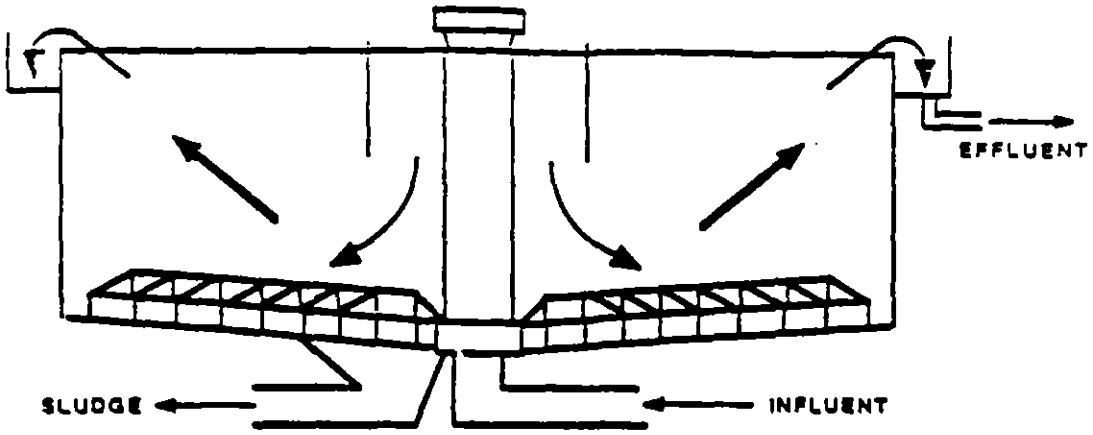

CENTER FEED CLARIFIER WITH SCRAPER SLUDGE REMOVAL SUSTEM

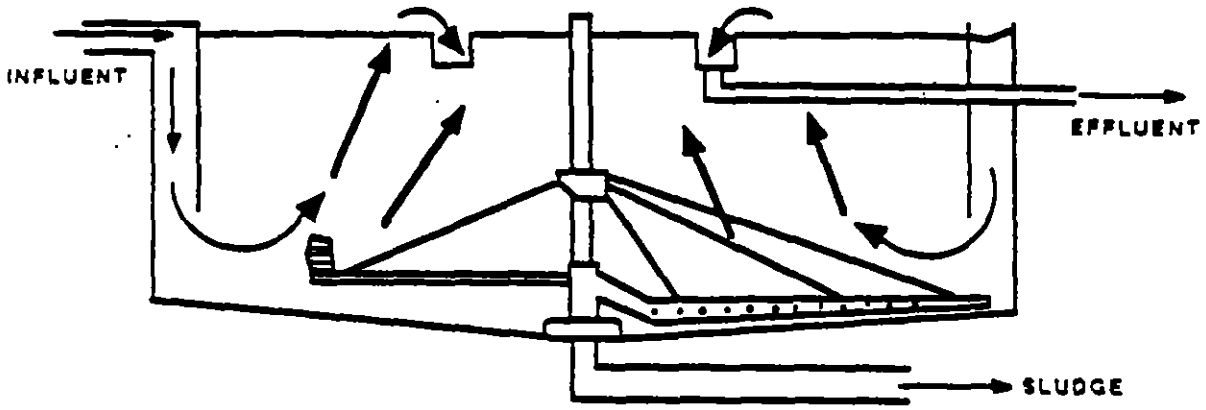

RIM FEED - CENTER TAKEOFF CLARIFIER WITH
HYDRAULIC SUCTION SLUDGE REMOVAL SYSTEM

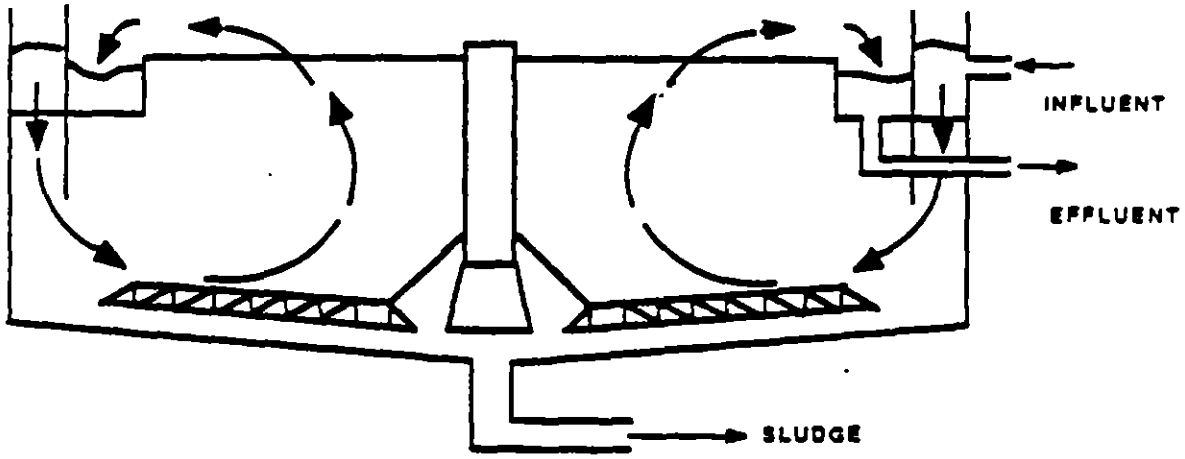

RIM FEED - RIM TAKEOFF CLARIFIER

FIGURE 2-3
CIRCULAR CLARIFIERS

The supernatant liquid effluent can be further treated in a polishing filtration system to remove precipitated residuals both in cases where the settling system is underdesigned and in cases where the particles are difficult to settle. Polishing filtration is discussed in Section 20 of this report.

2.4 Waste Characteristics Affecting Performance (WCAPs)

In determining whether chemical precipitation will achieve the same level of performance on an untested waste as on a previously tested waste and whether performance levels can be transferred, EPA examines the following waste characteristics: (a) the concentration and type of metals, (b) the concentration of total dissolved solids (TDS), (c) the concentration of complexing agents, and (d) the concentration of oil and grease.

2.4.1 Concentration and Type of Metals

For most metals, there is a specific pH at which the metal precipitate is least soluble. As a result, when a waste contains a mixture of many metals, it is not possible to operate a treatment system at a single pH or ORP value that is optimal for the removal of all metals. The extent to which this affects treatment depends on the particular metals to be removed and their respective concentrations. One alternative is to operate multiple precipitations, with intermediate settling, when the optimum pH occurs at markedly different levels for the metals present. If the concentration and type of metals in an untested waste differ from and are significantly higher than those in the tested

waste, the system may not achieve the same performance. Additional precipitating agents, alternate pH/ORP values, and/or multiple precipitations may be required to achieve the same treatment performance, or other, more applicable treatment technologies may need to be considered for treatment of the untested waste.

2.4.2 Concentration of Total Dissolved Solids (TDS)

High concentrations of total dissolved solids can interfere with precipitation reactions, as well as inhibit settling. Poor precipitate formation and flocculation are results of high TDS concentrations, and higher concentrations of solids are found in the treated wastewater residuals. If the TDS concentration in an untested waste is significantly higher than in the tested waste, the system may not achieve the same performance. Higher concentrations of precipitating agents may be required to achieve the same treatment performance, or other, more applicable treatment technologies may need to be considered for treatment of the untested waste.

2.4.3 Concentration of Complexing Agents

Metal complexes consist of a metal ion surrounded by a group of other inorganic or organic ions or molecules (often called ligands). In the complexed form, metals have a greater solubility. Also, complexed metals inhibit the reaction of the metal with the precipitating agents and therefore may not be removed as effectively from solution by chemical precipitation. However, EPA does not have analytical methods to determine the concentration of complexed metals in wastewaters. The

Agency believes that the best indicator for complexed metals is to analyze for complexing agents, such as cyanide, chlorides, EDTA, ammonia, amines, and methanol, for which analytical methods are available. Therefore, EPA uses the concentration of complexing agents as a surrogate waste characteristic for the concentration of metal complexes. If the concentration of complexing agents in an untested waste is significantly higher than in the tested waste, the system may not achieve the same performance. Higher concentrations of precipitating agents may be required to achieve the same treatment performance, or other, more applicable treatment technologies may need to be considered for treatment of the untested waste.

2.4.4 Concentration of Oil and Grease

The concentration of oil and grease in a waste inhibits the settling of the precipitate by creating emulsions that require a long settling time. Suspended oil droplets in water tend to suspend particles such as chemical precipitates that would otherwise settle out of solution. Even with the use of coagulants or flocculants, the settling of the precipitate is less effective. If the concentration of oil and grease in an untested waste is significantly higher than in the tested waste, the system may not achieve the same performance. Pretreatment of the waste may be required to reduce the oil and grease concentration and achieve the same treatment performance, or other, more applicable treatment technologies may need to be considered for treatment of the untested waste.

2.5 Design and Operating Parameters

In assessing the effectiveness of the design and operation of a chemical precipitation system, EPA examines the following parameters: (a) the pH/ORP value; (b) the precipitation temperature; (c) the residence time; (d) the amount and type of precipitating agents, coagulants, and flocculants; (e) the degree of mixing; and (f) the settling time.

2.5.1 pH/ORP Value

The pH/ORP value in continuous chemical precipitation systems is used as an indicator of the concentration of precipitating agents in the reaction tank and, thus, to regulate their addition to the tank. The pH/ORP value also affects the solubility of metal precipitates formed and therefore directly impacts the effectiveness of their removal. EPA monitors the pH/ORP value continuously, if possible, to ensure that the system is operating at the appropriate design condition and to diagnose operational problems.

2.5.2 Precipitation Temperature

The precipitation temperature affects the solubility of the metal precipitates. Generally, the lower the temperature, the lower the solubility of the metal precipitates and vice versa. EPA monitors the precipitation temperature continuously, if possible, to ensure that the system is operating at the appropriate design condition and to diagnose operational problems.

2.5.3 Residence Time

The residence time impacts the extent of the chemical reactions to form metal precipitates and, as a result, the amount of precipitates that can be settled out of solution. For batch systems, the residence time is controlled directly by adjusting the treatment time in the reaction tank. For continuous systems, the wastewater feed rate is controlled to make sure that the system is operating at the appropriate design residence time. EPA monitors the residence time to ensure that sufficient time is provided to effectively precipitate from the wastewater.

2.5.4 Amount and Type of Precipitating Agents, Coagulants, and Flocculants

The amount and type of precipitating agent used to effectively treat the wastewater depends on the amount and type of metal and inorganic constituents in the wastewater to be treated. Other design and operating parameters, such as the pH/ORP value, the precipitation temperature, the residence time, the amount and type of coagulants and flocculants, and the settling time, are determined by the selection of precipitating agents.

The addition of coagulants and flocculants improves the settling rate of the precipitated metals and inorganics and allows for smaller settling systems (i.e., lower settling time) to achieve the same degree of settling as a much larger system. Typically, anionic polyelectrolyte flocculating agents are most effective with metal precipitates, although cationic or non-ionic polyelectrolytes also are effective. Typical doses

range from 0.1 to 10 mg/l of the total influent wastewater stream. Conventional coagulants, such as alum (aluminum sulfate), are also effective, but must be dosed at much higher concentrations to achieve the same result. Therefore, these coagulants add more to the settled sludge volume requiring disposal than do the polyelectrolyte flocculants. EPA examines the amount and type of precipitating agents, coagulants, and flocculants added, and their method of addition to the wastewater, to ensure effective precipitation.

2.5.5 Degree of Mixing

Mixing provides greater uniformity of the wastewater feed and disperses precipitating agents, coagulants, and flocculants throughout the wastewater to ensure the most rapid precipitation reactions and settling of precipitate solids possible. The quantifiable degree of mixing is a complex assessment that includes, among other things, the amount of energy supplied, the length of time the material is mixed, and the related turbulence effects of the specific size and shape of the tank. This is beyond the scope of simple measurement. EPA, however, evaluates the degree of mixing qualitatively by considering whether mixing is provided and whether the type of mixing device is one that could be expected to achieve uniform mixing of the wastewater.

2.5.6 Settling Time

Adequate settling time must be provided to make sure that removal of the precipitated solids from the wastewater has been completed. EPA monitors the settling time to ensure effective solids removal.

2.6 References

Cherry, K.F. 1982. Plating waste treatment. pp. 45-67. Ann Arbor, Mich.: Ann Arbor Science Publishers, Inc.

Cushnie, G.C., Jr. 1985. Electroplating wastewater pollution control technology. pp. 48-62, 84-90. Park Ridge, N.J.; Noyes Publications.

Cushnie, G.C., Jr. 1984. Removal of metals from wastewater: neutralization and precipitation. pp. 55-97. Park Ridge, N.J.; Noyes Publications.

Gurnham, C.F. 1955. Principles of industrial waste treatment. pp. 224-234. New York: John Wiley and Sons.

Kirk-Othmer. 1980. Flocculation. In Encyclopedia of chemical technology, 3rd ed., Vol. 10, pp 489-516. New York: John Wiley and Sons.

USEPA. 1983. U.S. Environmental Protection Agency. Treatability manual, Vol. III, Technology for control/removal of pollutants, pp. 111.3.1.3.2. EPA-600/2-82-001C, January 1983.

3. ELECTROLYTIC OXIDATION OF CYANIDE

3.1 Applicability

Electrolytic oxidation is a treatment technology applicable to wastes containing high concentrations of cyanide in solution. Because of excessive retention time requirements, the process is often applied as preliminary treatment for highly concentrated cyanide wastes, prior to more conventional chemical cyanide oxidation (Cushnie 1985).

This treatment technology is used in industry for the destruction of cyanide in (a) concentrated spent plating solutions and stripping solutions, (b) spent heat treating baths, (c) alkaline descalers, and (d) metal passivating (rust-inhibiting) solutions. Electrolytic oxidation has been demonstrated successfully for treatment of wastes containing concentrations of cyanide up to 100,000 mg/l (Easton 1967). However, for concentrations of cyanide lower than 500 mg/l, chemical oxidation treatment may be more efficient.

3.2 Underlying Principles of Operation

The basic principle of electrolytic oxidation of cyanide is that concentrated cyanide waste subject to an electrolytic reaction with dissolved oxygen in an aqueous solution is broken down to the gaseous products carbon dioxide (CO_2), nitrogen (N_2), and ammonia (NH_3). The process is conducted at elevated temperatures for periods ranging from several hours to over a week, depending on the initial cyanide concentration and the desired final cyanide concentration. The

theoretical destruction process that takes place at the anodes is described by the following reaction:

$$\underset{\text{cyanide ion}}{2CN^-} + \underset{\text{oxygen}}{2O_2} \xrightarrow{\text{Electricity}} \underset{\text{carbon dioxide}}{2CO_2} + \underset{\text{nitrogen}}{N_2} + \underset{\text{electrons}}{2e^-}$$

The effectiveness of electrolytic oxidation is dependent on the conductivity of the waste, which is a function of several waste characteristics including the concentration of cyanide and other ions in solution. As the process continues, the waste becomes less capable of conducting electricity as cyanide concentration is reduced, causing the electrolytic reaction to be much less efficient at longer retention times.

3.3 Description of Electrolytic Oxidation Process

Typically, electrolytic destruction of cyanide takes place in a closed cell. This cell consists of two electrodes suspended in an aqueous solution, with direct current (DC) electricity supplied to drive the reaction to completion. The temperature of the bath containing the cyanide waste is maintained at or above 52°C (125°F). Sodium chloride may be added to the solution as an electrolyte (conductor) to increase the conductivity of the waste being treated. Since the reaction may take days or weeks, water is usually added to the tank periodically to make up for losses due to evaporation from the heated tank. This is necessary to ensure that the electrodes remain fully submerged so that a full flow of current is maintained in the solution during treatment. Following treatment, the treated waste is generally further treated in a conventional chemical oxidation system to destroy residual cyanides.

3.4 Waste Characteristics Affecting Performance (WCAPs)

In determining whether electrolytic oxidation will achieve the same level of performance on an untested waste as on a previously tested waste and whether performance levels can be transferred, EPA examines the following waste characteristics: (a) the concentration of other oxidizable materials and (b) the concentration of reducible metals.

3.4.1 Concentration of Other Oxidizable Materials

The presence of oxidizable organics (such as oil and grease and surfactants) and the presence of inorganic ionic species in a reduced state (such as trivalent chromium or sulfide) may increase the treatment time required to achieve destruction of cyanide because these materials may be oxidized preferentially to the cyanide in solution. If concentrations of other oxidizable materials are significantly higher in the untested waste than in the tested waste, the system may not achieve the same performance. Longer reaction time may be required to oxidize cyanide and achieve the same treatment performance, or other, more applicable treatment technologies may need to be considered for treatment of the untested waste.

3.4.2 Concentration of Reducible Metals

The electrolytic process may cause some of the more easily reduced metals in the waste, such as copper, to plate out onto the anode as the pure metal. The plating of metals onto the anode may result in changes in current density and, hence, may change the rate of cyanide oxidation. If the concentration of reducible metals in the untested waste is

significantly higher than that in the tested waste, the system may not achieve the same performance and other, more applicable treatment technologies may need to be considered for treatment of the untested waste.

3.5 Design and Operating Parameters

In assessing the effectiveness of the design and operation of an electrolytic oxidation system, EPA examines the following parameters: (a) the oxidation temperature, (b) the residence time, (c) the pH, (d) the electrical conductivity, (e) the electrode spacing and surface area, and (f) the degree of mixing.

3.5.1 Oxidation Temperature

For the electrolytic process, elevated temperatures are used. Normal temperatures range from 52 to 93°C (125 to 200°F). The temperature can be raised by increasing the flow of steam to the coils or jacket supplying heat to the reactor contents. EPA monitors the oxidation temperature to ensure that the system is operating at the appropriate design condition and to diagnose operational problems.

3.5.2 Residence Time

Electrolytic oxidation is usually a batch process. The time allowed to complete the reaction is an important factor in electrolysis and is dependent on the initial concentration of the waste and the desired final cyanide concentration. The rate of cyanide destruction decreases as the cyanide concentration decreases (i.e., the rate of cyanide destruction asymptotically approaches zero). Typical residence times range from

periods of several hours to more than a week. EPA observes the residence time to ensure that sufficient time is provided to effectively destroy the cyanides in the wastes.

3.5.3 pH

Typical solutions for electrolytic oxidation have a pH ranging from 11.5 to 12.0. The pH must be maintained in the alkaline range to prevent liberation of toxic hydrogen cyanide. Typically, pH is controlled by the addition of caustic or lime. EPA monitors the pH to ensure that the treatment system is operating at the appropriate design condition and to diagnose operational problems.

3.5.4 Electrical Conductivity

The solution must have a high enough electrical conductivity to allow the reaction to proceed at an acceptable rate. If the conductivity is not ..gh enough, it can be improved by adding an electrolyte such as sodium chloride. The conductivity of the waste during the reaction is ormally determined by monitoring both the current and voltage of the ell. EPA monitors the electrical conductivity to ensure that the eatment system is operating at the appropriate design condition.

5.5 Electrode Spacing and Surface Area

The spacing and surface area of the electrodes directly impact the ent flowing through the waste. The reaction rate is increased by closer electrode spacing and more electrode surface area because increases the current density in the cell. EPA observes the ode spacing and surface area to ensure that sufficient current y is provided to effectively destroy the cyanides in the waste.

3.5.6 Degree of Mixing

Electrolytic destruction of cyanide requires good mixing in the reaction vessel. Mixing helps ensure an adequate supply of oxygen (from the air) for the electrochemical reaction (see Section 3.2, Underlying Principles of Operation), enhances mass transfer to promote the oxidation reaction, and keeps suspended solids in suspension. Mixing may be provided by the bubbling of air from the bottom of the reactor, or an external source of mixing may be provided. The quantifiable degree of mixing is a complex assessment that includes, among other things, the amount of energy supplied, the length of time the material is mixed, and the related turbulence effects of the size and shape of the reaction vessel used. This is beyond the scope of simple measurement. EPA, however, evaluates the degree of mixing qualitatively by considering whether mixing is provided and whether the type of mixing device is one that could be expected to achieve uniform mixing of the waste.

3.6 References

Cushnie, G.C. Jr. 1985. Electroplating wastewater pollution control technology. p. 205. Park Ridge, N.J.: Noyes Publications.

Easton, J.K. 1967. Electrolytic decomposition of concentrated cyanide plating wastes. Journal Water Pollution Control Federation. 39(10):1621-1626.

Patterson, J.W. 1985. Industrial wastewater treatment technology. 2nd ed., pp. 123-125. Stoneham, Mass. Butterworth Publishers.

Pearson, G.J., and Karrs, S.R. 1984. Electrolytic cyanide destruction, In Proceedings for Plating and Surface Finishing, pp. 2 and 3.

Roy, C.H. 1981. Electrolytic wastewater treatment. In a series of American Electroplaters Society, Inc., illustrated lectures, pp. 8-10.

4. HEXAVALENT CHROMIUM REDUCTION

4.1 Applicability

Hexavalent chromium reduction is a treatment technology applicable to wastes containing hexavalent chromium wastes, including plating solutions, stainless steel acid baths and rinses, "chrome conversion" coating process rinses, and chromium pigment manufacturing wastes. Because this technology requires that the pH be in the acidic range, it would not be applicable to a waste that contains significant amounts of cyanide or sulfide. In such cases, lowering of the pH can result in the release of toxic gases such as hydrogen cyanide or hydrogen sulfide. It is important to note that additional precipitation treatment is required to remove trivalent chromium from the solution following reduction of the hexavalent chromium.

4.2 Underlying Principles of Operation

The basic principle of hexavalent chromium reduction is to reduce the valence of chromium in solution (in the form of chromate or dichromate ions) from the hexavalent state to the trivalent state. "Reducing agents" used to effect the reduction include sodium sulfite ($Na_2S_2O_3$), sodium bisulfite ($NaHSO_3$), sodium metabisulfite ($Na_2S_2O_5$), sulfur dioxide (SO_2), sodium hydrosulfide (NaHS), and the ferrous form of iron (Fe^{+2}).

A typical reduction reaction, using sodium sulfite as the reducing agent, is as follows:

$$H_2(Cr^{+6})_2O_7 + 3Na_2SO_3 + 3H_2SO_4 \rightarrow (Cr^{+3})_2(SO_4)_3 + 3Na_2SO_4 + 4H_2O$$

The reaction is usually accomplished at pH values from 2 to 3.

At the completion of the chromium reduction step, the trivalent chromium compounds are precipitated from solution by raising the pH above 8. The insoluble trivalent chromium (in the form of chromium hydroxide) is then allowed to settle from solution. The precipitation reaction is as follows:

$$Cr_2(SO_4)_3 + 3Ca(OH)_2 \rightarrow 2Cr(OH)_3 + 3CaSO_4$$

4.3 Description of Chromium Reduction Process

The chromium reduction treatment process can be operated in a batch or continuous mode. A batch system consists of a reaction tank, a mixer to homogenize the contents of the tank, a supply of reducing agent, and a source of acid and base for pH control.

A continuous chromium reduction treatment system, as shown in Figure 4-1, usually includes a holding tank upstream of the reaction tank for flow and concentration equalization. It also includes instrumentation to automatically control the amount of reducing agent added and the pH of the reaction tank. The amount of reducing agent is controlled by the use of a sensor called an oxidation reduction potential (ORP) cell. The ORP sensor electronically measures, in millivolts, the level to which the redox reaction has proceeded at any given time. It must be noted, however, that the ORP reading is very pH dependent. Consequently, if the pH is not maintained at a steady value, the ORP will vary somewhat, regardless of the level of chromate reduction. Following chromium

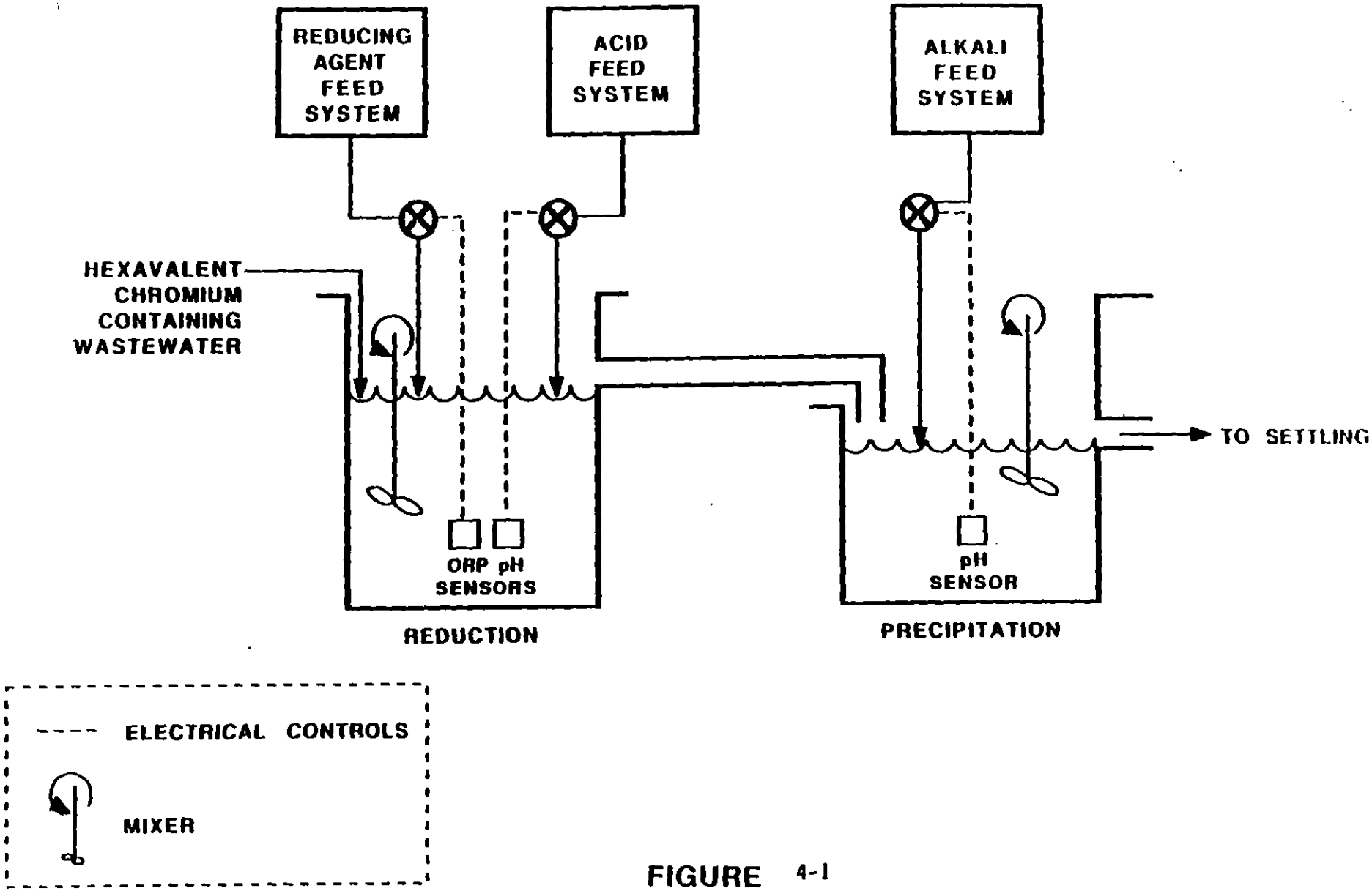

FIGURE 4-1
CONTINUOUS HEXAVALENT
CHROMIUM REDUCTION SYSTEM

reduction, the trivalent chromium is precipitated and settled out of the solution, which is further treated and/or disposed. Precipitated trivalent chromium is either reused or further treated by stabilization and land disposed.

4.4 Waste Characteristics Affecting Performance (WCAPs)

In determining whether hexavalent chromium reduction will achieve the same level of performance on an untested waste as on a previously tested waste and whether performance levels can be transferred, EPA examines the following waste characteristics: (a) the concentration of oil and grease and (b) the concentration of other reducible metals.

4.4.1 Concentration of Oil and Grease

EPA believes that oil and grease compounds could cause monitoring problems because of fouling of instrumentation (e.g., electrodes for pH and ORP sensors). If the concentration of oil and grease in the untested waste is significantly higher than that in the tested waste, the system may not achieve the same performance and other, more applicable treatment technologies may need to be considered for treatment of the untested waste.

4.4.2 Concentration of Other Reducible Metals

Ionized metals (such as silver, copper, and mercury) can compete with chromium for reducing agents, thereby requiring greater amounts of reducing agents to completely reduce the chromium. If the concentration of reducible metals in the untested waste is significantly higher than that in the tested waste, the system may not achieve the same

performance. Additional reducing agents may be required to reduce the chromium and achieve the same treatment performance, or other, more applicable treatment technologies may need to be considered for treatment of the untested waste.

4.5 Design and Operating Parameters

In assessing the effectiveness of the design and operation of a hexavalent chromium reduction system, EPA examines the following parameters: (a) the amount and type of reducing agent, (b) the pH, (c) the residence time, and (d) the degree of mixing.

4.5. Amount and Type of Reducing Agent

The choice of a reducing agent establishes the chemical reaction upon which the chromium reduction system is based. The amount of reducing agent must be monitored and controlled in both batch and continuous systems to ensure complete reduction. In batch systems, reducing agent is usually controlled by analysis of the hexavalent chromium remaining in solution, but it may also be controlled by using an ORP monitoring system. For continuous systems, the ORP reading is used to monitor and control the addition of reducing agent.

The ORP will slowly change until the reduction reaction is completed at which point the ORP will change rapidly. The set point for the ORP monitor is approximately the reading just after the rapid change has begun. The reduction system must then be monitored periodically to determine whether the selected set point needs further adjustment. EPA monitors the hexavalent chromium remaining in solution for batch systems

and monitors the ORP continuously, if possible, for continuous systems to ensure that an effective amount of the reducing agent has been added to the system.

4.5.2 pH

For batch and continuous systems, pH affects the reduction reaction. The reaction speed is significantly reduced at pH values above. approximately 4.0. For a batch system, the pH can be monitored intermittently during treatment. For a continuous system, the pH must be continuously monitored because of its effect on the ORP reading. EPA monitors the pH to ensure that the system is operating at the appropriate design condition and to diagnose operational problems.

4.5.3 Residence Time

The residence time impacts the extent to which the hexavalent chromium reduction reaction goes to completion. For batch systems, the residence time is controlled directly by adjusting the treatment time in the reaction tank. For continuous systems, the feed rate is controlled to make sure that the system is operated at the appropriate design residence time. EPA monitors the residence time to ensure that sufficient time is provided to effectively reduce the waste.

4.5.4 Degree of Mixing

The reduction system should be designed to provide adequate mixing in order to ensure uniform distribution of the reducing agent and chromium throughout the reactor. The quantifiable degree of mixing is a complex assessment that includes, among other things, the amount of energy

supplied, the length of time the material is mixed, and the related turbulence effects of the specific size and shape of the reaction vessel. This is beyond the scope of simple measurement. EPA, however, evaluates the degree of mixing qualitatively by considering whether mixing is provided and whether the type of mixing device is one that could be expected to achieve uniform mixing of the waste.

4.6 References

Aldrich, J.R. 1985. Effects of pH and proportioning of ferrous and sulfide reduction chemicals on electroplating waste treatment sludge production. In Proceeding of the 39th Purdue Industrial Waste Conference, May 8-10, 1984. Stoneham, Mass.: Butterworth Publishers.

Cherry, K.F. 1982. Plating waste treatment. Ann Arbor, Mich.: Ann Arbor Science Publishers, Inc.

Lanouette, K.H. 1977. Heavy metals removal. Chemical Engineering, October 17, 1977, pp. 73-80.

Patterson, J.W. 1985. Industrial wastewater treatment technology. 2nd ed. Stoneham, Mass.: Butterworth Publishers.

Rudolfs, W. 1953. Industrial wastes, their disposal and treatment. Valley Stream, N.Y.: L.E.C. Publishers Inc.

5. HIGH TEMPERATURE METALS RECOVERY

5.1 Applicability

High temperature metals recovery (HTMR) is a technology applicable to wastes containing metal oxides and metal salts (including cadmium, chromium, lead, nickel, and zinc compounds) at concentrations ranging from 10 percent to over 70 percent with low levels (i.e., below 5 percent) of organics and water in the wastes. There are a number of different types of high temperature metals recovery systems, which generally differ from one another in the source of energy used and the method of recovery. These HTMR systems include the rotary kiln process, the plasma arc reactor, the rotary hearth electric furnace system, the molten slag reactor, and the flame reactor.

HTMR is generally not used for mercury-containing wastes even though mercury will volatilize readily at the process temperatures present in the high temperature units. The retorting process is normally used for mercury recovery because mercury is very volatile and lower operating temperatures can be used. Thus, the retorting process is more economical than HTMR for mercury-bearing wastes. Retorting is discussed in Section 7.

The HTMR process has been demonstrated on wastes such as baghouse dusts and dewatered scrubber sludge from the production of steels and ferroalloys. Zinc, cadmium, and lead are the metals most frequently recovered. The process has not been extensively evaluated for use with metal sulfides. The sulfides are chemically identical to natural

minerals ordinarily present in ores used as feedstocks by primary smelters. Some sulfide-bearing wastes from the chrome pigments industry have been sent to such primary smelters. However, with sulfides, a possibility exists for formation of either carbon disulfide from reaction with carbon or sulfur dioxide from reaction with oxygen in the HTMR processes.

Metal halide salts are also not directly used in HTMR processes. They, however, may be converted to oxides or hydroxides, which are acceptable feedstocks for HTMR processes.

5.2 Underlying Principles of Operation

The basic principle of operation for this technology is that metal oxides and salts are separated from a waste through a high temperature thermal reduction process that uses carbon, limestone, and silica (sand) as raw materials. The carbon acts as a reducing agent and reacts with metal oxides to generate carbon dioxide and free metal. The silica and limestone serve as fluxing agents. This process yields a metal product for reuse and reduces the concentration of metals in the residuals and, hence, the amount of waste that needs to be land disposed. An example HTMR reaction is the recovery of zinc, which proceeds as follows:

$$2\ ZnO + C \rightarrow 2\ Zn + CO_2$$

5.3 Description of High Temperature Metals Recovery Process

The HTMR process consists of a mixing unit, a high temperature processing unit (kiln, furnace, etc.), a product collection system, and a residual treatment system. A schematic diagram for a high temperature metals recovery system is shown in Figure 5-1.

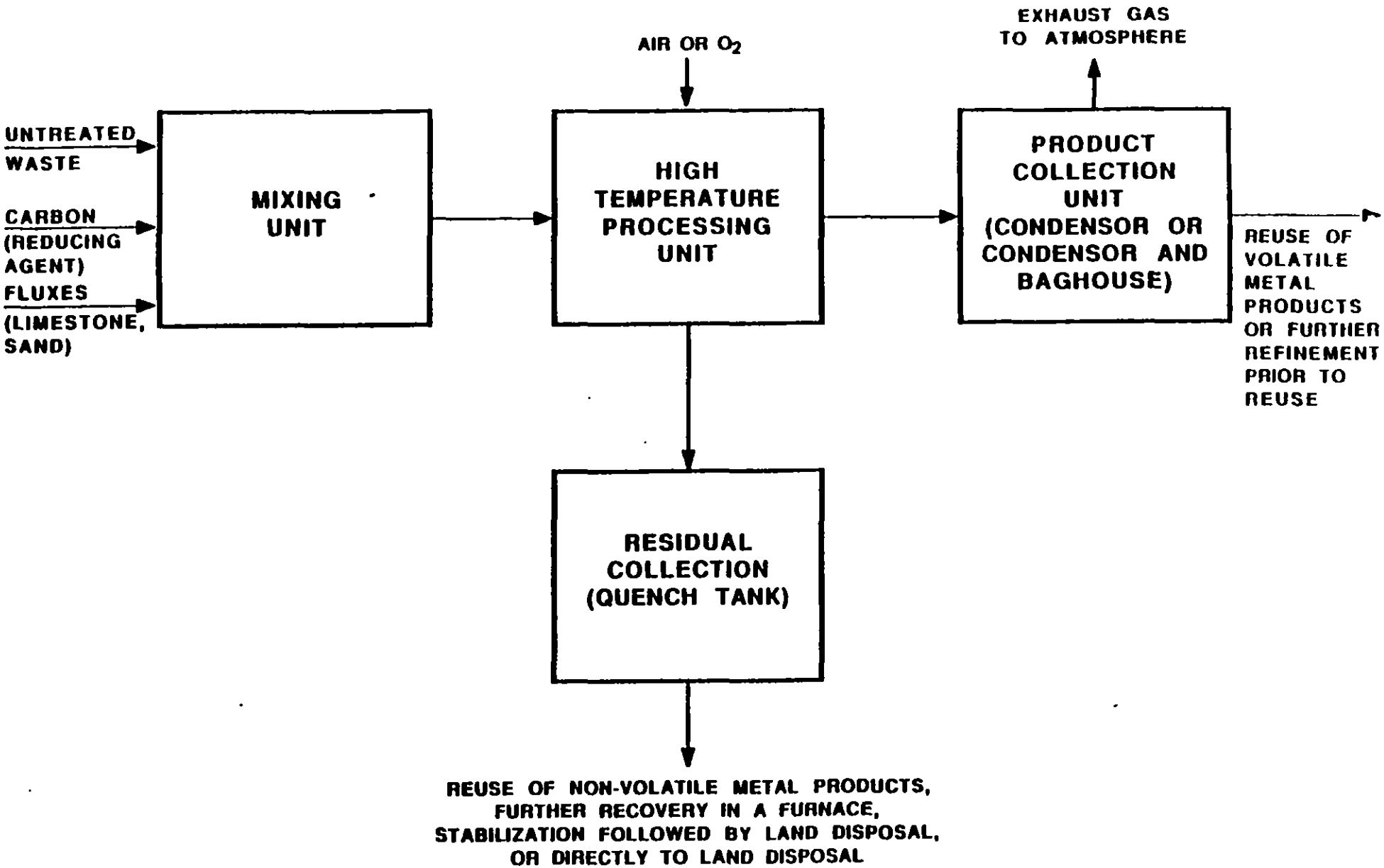

FIGURE 5-1 HIGH TEMPERATURE METALS RECOVERY SYSTEM

The mixing unit homogenizes metal-bearing wastes, thus minimizing feed variations to the high temperature processing unit. Before the wastes are fed into the high temperature processing unit, fluxing agents and carbon can be added to the mixing unit and mixed with the wastes. The fluxes used (sand and limestone) are often added to react with certain metal components, preventing their volatilization and resulting in an enhanced purity of the desired volatile metals removed.

The blended waste materials are fed to a furnace, where they are heated to temperatures ranging from 1100 to 1400°C (2012 to 2552°F), resulting in the reduction and volatilization of the desired metals. The combination of temperature, residence time, and turbulence provided by rotation of the unit or addition of an air or oxygen stream helps ensure the maximum reduction and volatilization of metal constituents.

The product collection system can consist of either a condenser or a combination condenser and baghouse. The choice of a particular system depends on whether the metal is to be collected in the metallic form or as an oxide. Recovery and collection are accomplished for the metallic form by condensation alone, and for the oxide by reoxidation, Figure 15-1 condensation, and subsequent collection of the metal oxide particulates in a baghouse. There is no difference in these two types of metal recovery and collection systems relative to the kinds of waste that can be treated; the use of one system or the other simply reflects the facility's preference relative to product purity. In the former case,

the direct condensation of metals allows for the separation and collection of individual metals in a relatively uncontaminated form; in the latter case, the metals are collected as a combination of several metal oxides.

The treated waste residual slag, containing higher concentrations of the less-volatile metals than the untreated waste, is sometimes cooled in a quench tank and (a) reused directly as a product (e.g., a waste residual containing mostly iron can be reused in steelmaking); (b) reused after further processing (e.g., a waste residual containing oxides of iron, chromium, and nickel can be reduced to metallic form and then recovered for use in the manufacture of stainless steel); or, if the material has no recoverable value, (c) stabilized, to immobilize any remaining metal constituents, and land disposed or (d) directly land disposed as a slag.

5.4 Waste Characteristics Affecting Performance (WCAPs)

In determining whether high temperature metals recovery will achieve the same level of performance on an untested waste as on a previously tested waste and whether performance levels can be transferred, EPA examines the following waste characteristics: (a) the concentrations of undesirable volatile metals, (b) the metal constituent boiling points, and (c) the thermal conductivity of the waste.

5.4.1 Concentration of Undesirable Volatile Metals

Because HTMR is a recovery process, the product must meet certain purity requirements prior to reuse. If the waste contains other volatile

metals, such as arsenic or antimony, which are difficult to separate from the desired metal products and whose presence may affect the ability to reuse the product or refine it for subsequent reuse, HTMR may not be an appropriate technology. If the concentration of undesirable volatile metals in the untested waste is significantly higher than that in the tested waste, the system may not achieve the same performance and other, more applicable treatment technologies may need to be considered for treatment of the untested waste.

5.4.2 Metal Constituent Boiling Points

The greater the ratio of volatility of the waste constituents, the more easily the separation of these constituents can proceed. This ratio is called relative volatility. EPA recognizes, however, that the relative volatilities cannot be measured or calculated directly for the types of wastes generally treated by high temperature metals recovery. This is because the wastes usually consist of a myriad of components, all with different vapor pressure-versus-temperature relationships. However, because the volatility of components is usually inversely proportional to their boiling points (i.e., the higher the boiling point, the lower the volatility), EPA uses the boiling point of waste components as a surrogate waste characteristic for relative volatility. If the differences in boiling points between the more volatile and less volatile constituents are significantly lower in the untested waste than in the tested waste, the system may not achieve the same performance and other, more applicable treatment technologies may need to be considered for treatment of the untested waste.

5.4.3 Thermal Conductivity of the Waste

The ability to heat constituents within an HTMR process feed matrix is a function of the heat transfer characteristics of the individual feed components (coke, limestone, untreated waste, etc.). The constituents being recovered from the waste must be heated to near or above their boiling points in order for them to be volatilized and recovered. The rate at which heat will be transferred to the feed mixture is dependent on the mixture's thermal conductivity, which is the ratio of the conductive heat flow to the temperature gradient across the material. Thermal conductivity measurements, as part of a treatability comparison of two different wastes to be treated by a single HTMR system, are most meaningful when applied to wastes that are homogeneous (i.e., uniform throughout). As wastes exhibit greater degrees of nonhomogeneity, thermal conductivity becomes less accurate in predicting treatability because the measurement reflects heat flow through regions having the greatest conductivity (i.e., the path of least resistance) and not heat flow through all parts of the waste. Nevertheless, EPA believes that thermal conductivity may provide the best measure of performance of heat transfer. If the thermal conductivity of the untested waste is significantly lower than that of the tested waste, the system may not achieve the same performance and other, more applicable treatment technologies may need to be considered for treatment of the untested waste.

5.5 Design and Operating Parameters

In assessing the effectiveness of the design and operation of an HTMR system, EPA examines the following parameters: (a) the HTMR temperature, (b) the residence time, (c) the degree of mixing, (d) the carbon content of the feed, and (e) the calcium-to-silica ratio of the feed.

5.5.1 HTMR Temperature

Temperature provides an indirect measure of the energy available (i.e., Btu/hr) to volatilize the metal waste constituents. The higher the temperature in the high temperature processor, the more likely it is that the constituents will react with carbon to form free metals and volatilize. The temperature must be at least equal to or greater than the boiling point of the metals being volatilized for recovery. However, excessive temperatures could volatilize less-volatile, undesirable metals into the product, possibly inhibiting the potential for reuse of the product. EPA monitors the HTMR processor temperature continuously, if possible, to ensure that the system is operating at the appropriate design condition (at or above the boiling point(s) of the metal or metals being recovered, but not excessively high so as to volatilize other unwanted constituents) and to diagnose operational problems.

5.5.2 Residence Time

The residence time impacts the amount of volatile metals volatilized and recovered. It is dependent on the HTMR processor temperature and the thermal conductivity of the feed blend. EPA monitors the residence time to ensure that sufficient time is provided to effectively volatilize the volatile constituents for recovery.

5.5.3 Degree of Mixing

Effective mixing of the waste with coke, silica, and limestone is necessary to produce a uniform feed blend to the system. The quantifiable degree of mixing is a complex assessment that includes, among other things, the amount of energy supplied, the length of time the material is mixed, and the related turbulence effects of the specific size and shape of the tank or vessel. This is beyond the scope of simple measurement. EPA, however, evaluates the degree of mixing qualitatively by considering whether mixing is provided and whether the type of mixing device is one that could be expected to achieve uniform mixing of the waste.

5.5.4 Carbon Content of the Feed

The amount of carbon added to the waste must be sufficient to ensure mplete reduction of the volatile metals being recovered. EPA examines the basis for calculation of the amount of carbon added to the waste to ensure that sufficient carbon is being used in the feed blend to effectively reduce metal compounds.

5.5.5 Calcium-to-Silica Ratio of the Feed

The calcium-to-silica ratio in the feed blend must be controlled to limit precipitation of metallic iron in the high temperature processor. The iron forms as solid calcium iron silicate, which is very difficult to subsequently process into any useful material. Aluminum oxide will also undergo reactions with lime and silica to form calcium aluminosilicates, which will lower the density and increase the volume of slag generated.

Precipitates and modified slags affect the reduction, volatilization, and recovery of volatile metals by changing heat flow characteristics in the system and by undergoing secondary, high temperature chemical reactions with metal oxides in the feed, converting them to the previously noted inert metal silicates or silicoaluminates. The ratio of calcium to silica to be used is dependent on the waste composition. Generally, a one-to-one silica-to-calcium oxide ratio is highly desired, so amounts of limestone and sand need to be adjusted based on the calcium and silica content of the waste to achieve this ratio.

Excess lime may also be added to fix sulfur in the feed as calcium sulfate. This will prevent the volatile metals from reacting with sulfur to form metal sulfides, thereby lowering the recovery of metals or oxides. EPA monitors the amounts of limestone and sand added to the waste to ensure that the calcium-to-silica ratio selected to maximize metal or oxide recovery is maintained during treatment.

5.6 References

Center for Metals Production. 1985. Electric arc furnace dust--disposal, recycle and recovery. Pittsburgh, Pa.

Duby, P. 1980. Extractive metallurgy. In Kirk-Othmer encyclopedia of chemical technology. 3rd ed. Vol. 9, p. 741. New York: John Wiley and Sons.

Lloyd, T. 1980. Zinc compounds. In Kirk-Othmer encyclopedia of chemical technology. 3rd ed. Vol. 24, p. 824. New York: John Wiley and Sons.

Maczek, H., and Kola, R. 1980. Recovery of zinc and lead from electric furnace steelmaking dust at Berzelius. Journal of Metals 32:53-58.

Price, L. 1986. Tensions mount in EAF dust bowl. Metal Producing. February 1986.

6. ION EXCHANGE

6.1 Applicability

Ion exchange is a treatment technology applicable to (1) metals in wastewaters where the metals are present as soluble ionic species (e.g., Cr^{+3} and CrO_4^{-2}); (2) nonmetallic anions such as halides, sulfates, nitrates, and cyanides; and (3) water-soluble, ionic organic compounds including (a) acids such as carboxylics, sulfonics, and some phenols, at a pH sufficiently alkaline to yield ionic species, (b) amines, when the solution acidity is sufficiently acid to form the corresponding acid salt, and (c) quaternary amines and alkysulfates.

6.2 Underlying Principles of Operation

Ion exchange, when used in hazardous waste treatment, is a reversible process in which hazardous cations and/or anions are removed from an aqueous solution and are replaced by nonhazardous cations and/or anions. Ion exchange resins are cationic if they exchange positive ions (cations) and anionic if they exchange negative ions (anions). When the waste stream to be treated is brought into contact with a bed of resin beads (usually in a packed column), an exchange of hazardous ions for nonhazardous ions occurs on the surface of the resin beads. Initially, a nonhazardous ion is loosely bound to the surface of the resin. When a hazardous ion is near the resin, it is preferentially adsorbed to the surface of the resin (based on the differences in ionic potential), releasing the nonhazardous ion.

Cation exchange resins contain mobile positive ions, such as hydrogen (H^+) or sodium (Na^+), which are attached to immobile functional acid groups, such as sulfonic (SO_3-) and carboxylic (COO^-) groups. Anion exchange resins have immobile basic ions, such as amine (NH_2^-), to which the mobile anions, such as hydroxyl (OH^-) or chloride (Cl^-), are attached.

Ion exchange material is contacted with the solution containing the ion to be removed until the active sites in the exchange material are partially or completely used up ("exhausted") by that ion. For example, a cation exchange resin (designated R^-) to which a mobile positive ion (N^+) is attached reacts with a solution of electrolyte (M^+X^-) as shown below:

$$M^+X^- + R^-N^+ \rightarrow R^-M^+ + N^+ + X^-$$

After exhaustion, the resin is then contacted with a relatively low volume of a very concentrated solution of the exchange ion to convert ("regenerate") it back to its original form. The regeneration reaction may be written as follows:

$$R^-M^+ + N^+ \text{ (high concentration)} \rightarrow R^-N^+ + M^+$$

For instance, in the case of a sodium-based resin, a strong solution of sodium chloride is typically the regenerant solution. The regenerant solution forces the previously removed ions back into solution. This relatively low volume solution, now highly concentrated with the contaminant ions, must then be treated prior to disposal for recovery or removal of the hazardous cation or anion contaminants. There will

continue to be a high concentration of the regenerant ion (sodium in the above example) in the used regenerant solution because excess regenerant ion is necessary to force the contaminant ions back into solution. The direction and extent of the completion of the exchange reaction depend upon the equilibrium that is established between the ions in the solution (M^+X^-) and those in the exchange material (R^-N^+).

6.3 Description of Ion Exchange Process

Most ion exchange operations are conducted in packed columns. The aqueous solution to be treated is continuously fed to either the top or the bottom of the column. A typical fixed-bed ion exchange column consists of a vertical cylindrical pressure vessel with corrosion-resistant linings. If appropriate, a filter is installed at the inlet of the column to remove suspended particles because they may plug the exchange resin. Spargers are provided at the top and bottom of the column to distribute waste flow. Frequently, a separate distributor is used for the regenerant solution to ensure an even flow. The resin bed, usually consisting of several feet of ion exchange resin beads, is supported by a screen near the bottom distributor or by a support bed of inert granular material. Externally, the unit has a valve manifold to permit downflow operation, upflow backwashing (to remove any suspended material), injection of the regenerant solution, and rinsing of any excess regenerant.

A typical process schematic for a basic two-step cation/anion ion exchange system is presented in Figure 6-1. The ion exchange system

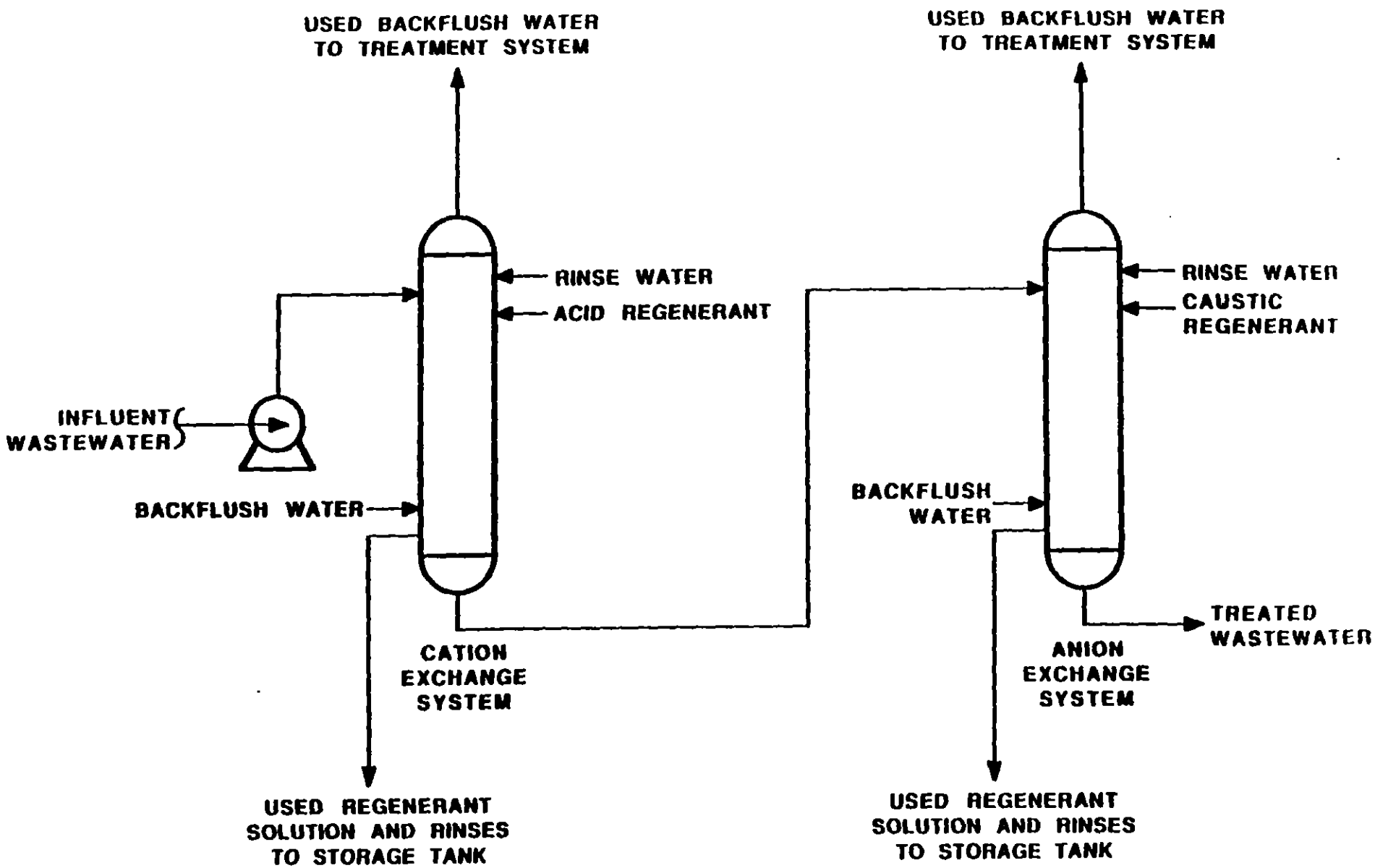

FIGURE 6-1 SCHEMATIC OF TWO STEP CATION/ANION ION EXCHANGE SYSTEM

shown in this schematic includes a series treatment with separate cation and anion exchange systems. Some systems contain both anion and cation exchange resins in the same vessel.

The pressure vessels used for ion exchange generally range in size from 2 to 6 feet in diameter for prepackaged modular systems, which typically handle 25- to 300-gpm flow rates, to a maximum custom size of 12 feet in diameter, which can handle flow rates up to 1,150 gpm. The height of these vessels varies between 6 and 10 feet to provide adequate resin storage, distribution nozzle layout, and freeboard capacity for bed expansion during backwashing. The nominal surface loading area of the ion exchange vessels ranges from 8 to 10 gpm per square foot.

6.4 Waste Characteristics Affecting Performance (WCAPs)

In determining whether ion exchange will achieve the same level of performance on an untested waste as on a previously tested waste and whether performance levels can be transferred, EPA examines the following waste characteristics: (a) the concentration and valence of the contaminant(s), (b) the concentration of competing ionic species, (c) the concentration of interfering inorganics and organics, (d) the concentrations of dissolved and suspended solids and oil and grease, and (e) the corrosiveness relative to the resin material.

6.4.1 Concentration and Valence of the Contaminant(s)

As the concentration and valence of adsorbable ions in the wastewater increase, the size of the resin bed required will increase as well, or, alternatively, the bed will become exhausted more rapidly. This is

because a given amount of ion exchange resin has a limited number of sites to adsorb charged ions. If, for example, the valence is doubled or the concentration of the adsorbed ions is doubled, the sites will be exhausted twice as quickly. Hence, very high concentrations of the waste may be inappropriate for ion exchange because of rapid site exhaustion, which could conceivably require regenerant volumes to be essentially equal to waste flow volumes. If the concentration and/or the valence of the contaminant(s) in an untested waste is significantly higher than that of the tested waste, the system may not achieve the same performance. A larger exchange bed or more frequent regeneration may be required to exchange higher concentrations and/or higher valences of the contaminant(s) and achieve the same treatment performance, or other, more applicable treatment technologies may need to be considered for treatment of the untested waste.

6.4.2 Concentration of Competing Ionic Species

The presence of other contaminants or ions in the wastewater can affect the performance of the ion exchange unit in removing the hazardous contaminant(s) of concern. Other ions in the wastewater with the same charge as the contaminant(s) of concern will compete for exchange sites on the resin. Also, ions with a higher valence will be preferentially adsorbed. While a low concentration of the contaminant(s) of concern may be readily removed from a solution with a low concentration of other similarly charged ionic species, the contaminant(s) may not be removed as efficiently from solutions where high concentrations of similarly charged

ions exist, especially if those ions have a higher valence than that of the contaminants. If the ions of concern are removed from a solution with high concentrations of other similarly charged ions, the resin will become exhausted more rapidly because most resins cannot selectively adsorb one contaminant in a solution containing other similarly charged ionic species. If the concentration of competing ionic species in an untested waste is significantly higher than that in the tested waste, the system may not achieve the same performance. A larger exchange bed or more frequent regeneration may be required to exchange higher concentrations of competing ionic species and achieve the same treatment performance, or other, more applicable treatment technologies may need to be considered for treatment of the untested waste.

6.4.3 Concentration of Interfering Inorganics and Organics

Interfering inorganics, such as iron precipitates, can accumulate in the pores of anion exchangers; these inorganics will physically break down or block the resin particles. Some organic compounds, particularly aromatics, can be irreversibly adsorbed by the exchange resins. Also, some ions tend to oxidize after they are removed from solution. For instance, Mn^{+2} (manganese) may oxidize to the insoluble Mn^{+4} state, thereby permanently fouling the exchange sites and requiring the premature replacement of the resin. If the concentration of interfering inorganics and organics in an untested waste is significantly higher than that in the tested waste, the system may not achieve the same performance and other, more applicable treatment technologies may need to be considered for treatment of the untested waste.

6.4.4 Concentrations of Dissolved and Suspended Solids and Oil and Grease

High concentrations of dissolved and suspended solids and oil and grease can affect the performance of ion exchange sites. Conventional ion exchange systems are usually downflow, i.e., the wastewater flows down through the resin bed. Regeneration is accomplished in either the downflow or upflow mode. If excessive concentrations of dissolved and suspended solids and/or oil and grease are present in the wastewater, the bed may clog and require backwashing prior to exhausting its exchange capacity. Backwashing may prove ineffective in the removal of some solids or oils. If the concentration of dissolved and suspended solids and/or oil and grease in an untested waste is significantly higher than that in the tested waste, the system may not achieve the same performance and other, more applicable treatment technologies may need to be considered for treatment of the untested waste.

6.4.5 Corrosiveness

Some wastewaters are extremely corrosive to ion exchange resin materials, reducing efficiency or increasing downtime for maintenance and repair. For instance, strong solutions of chromates may oxidize many resins, requiring premature replacement. If the corrosiveness of the untested waste is significantly higher than that of the tested waste, the system may not achieve the same performance and other, more applicable treatment technologies may need to be considered for treatment of the untested waste.

6.5 Design and Operating Parameters

In assessing the effectiveness of the design and operation of an ion exchange system, EPA examines the following parameters: (a) the amount and type of resin, (b) the amount and type of regenerant solution, (c) the hydraulic loading, and (d) the exchange temperature.

6.5.1 Amount and Type of Resin

The main design parameter that affects the performance of ion exchange systems is the amount and type of resin used. Numerous cationic and anionic resins are commercially available. The selection of a resin is based on a variety of factors. Different resins have different exchange capacities, and some have greater affinity than others for specific ions. Certain resins are designed to tolerate corrosive, oxidizing, or high temperature solutions, so their exchange capacity does not degrade as rapidly with use. Most resins will effectively remove contaminant ions from solution until they become exhausted. However, if resin bed exhaustion occurs too frequently, or if regeneration requires excessive volumes of the regenerant, the type and/or amount of resin might need to be changed. In some instances, pretreatment technologies may be required prior to ion exchange. For most metals removal, cation resins are usually required. However, some metal complexes, such as copper cyanide ($Cu(CN)_4^{-2}$), chromates (CrO_4^{-2}), and arsenates (AsO_4^{-3}), are anionic and require the use of anion exchange resins. EPA examines the amount and type of ion exchange resin in the treatment system to ensure that a sufficient amount of ion exchange resin is provided to effectively exchange the metal ions of concern.

6.5.2 Amount and Type of Regenerant Solution

For hydrogen-based cation exchangers, acid regenerant solutions are used (e.g., sulfuric, nitric, or hydrochloric acids). For sodium-based cation resins, sodium chloride is generally used. For anion exchange resins, alkali (commonly sodium hydroxide) is used to regenerate hydroxide-based resins. Sodium chloride is used for chloride-based anion resins. EPA examines the amount and type of regenerant solution used to ensure that it is compatible with the resin and waste treated and that effective removal of the contaminant ions from the exchange resin is achieved.

6.5.3 Hydraulic Loading Rate

The amount of time that the wastewater contaminants are in contact in the ion exchange resin (i.e., residence time) impacts the extent to which ion exchange occurs. Higher residence times generally improve exchange performance, but require larger ion exchange beds to maintain the same overall throughput. For a given size ion exchange bed, the residence time can be determined by the hydraulic loading rate. Typical hydraulic loading rates for ion exchange systems range from 600 to 15,000 gal/day-ft^2. EPA monitors the hydraulic loading rate to ensure that sufficient time is provided to effectively exchange contaminants.

6.5.4 Exchange Temperature

High temperatures reduce resin life, requiring premature replacement. EPA monitors the temperature in an ion exchange column continuously, if possible, to ensure that the system is operating at the appropriate design condition and to diagnose operational problems.

6.6 References

De Renzo, D.J., ed. 1978. Unit operations for treatment of hazardous industrial wastes. Park Ridge, N.J.: Noyes Data Corporation.

Dorfner, K. 1972. Ion exchangers: properties and applications. Ann Arbor, Mich.: Ann Arbor Science Publishers, Inc.

Metcalf & Eddy, Inc. 1979. Wastewater engineering: treatment disposal reuse. 2nd ed. New York: McGraw-Hill Book Co.

Patterson, J.W. 1985. Industrial waste treatment technology. 2nd ed. Stoneham, Mass. Butterworth Publishers.

Perry, R.H., and Chilton, C.H. 1973. Chemical engineers' handbook. 5th ed. New York: McGraw-Hill Book Co.

Sundstrom, D.W., and Klei, H.E. 1979. Wastewater treatment. Englewood Cliffs, N.J.: Prentice-Hall, Inc.

USEPA. 1983. U.S. Environmental Protection Agency. Treatability manual: Vol. III. Technology for control/removal of pollutants. EPA-600/2-82-001c. Washington, D.C.:U.S. Environmental Protection Agency.

Wheaton, R.M. 1978. Kirk-Othmer encyclopedia of chemical technology. 3rd ed., Vol. 13. New York: John Wiley and Sons.

7. RETORTING

7.1 Applicability

Retorting is a treatment technology applicable to wastes containing elemental mercury, as well as mercury present in the oxide, hydroxide, and sulfide forms, at levels above 100 parts per million, provided that the waste has a low total organic content (i.e., below 1 percent). For metals other than mercury, the typical retort operating temperatures (700 to 1000°F) are not high enough to decompose the metal compounds. High temperature metals recovery (HTMR) processes must be used to recover most other metals when they are not present in the pure metal form.

For most retorting processes, there is an additional requirement that the waste have a low water content, preferably below 20 percent. Dewatering reduces energy consumption by minimizing the amount of water evaporated and precludes problems involving the separation of recovered metals from large quantities of water.

7.2 Underlying Principles of Operation

Retorting is a process similar to high temperature metals recovery in that it provides for recovery of metals from wastes primarily by volatilization and subsequent collection and condensation of the volatilized components. Retorting yields a metal product for reuse and significantly reduces the concentration of metals in the waste residual, and, hence, the amount of treated waste that needs to be land disposed. This technology is different from HTMR in that HTMR includes a reduction reaction involving the use of carbon, while retorting does not use a

reducing agent. Additionally, this process differs with regard to the form and, possibly, the leachability of the residue generated; HTMR generates a slag, while retorting generates a granular solid residue that may have lower leachability than a slag if mercury is the only constituent of concern present in the untreated waste.

The basic principle of operation of retorting is that sufficient heat must be transferred to the waste to cause elemental metals to vaporize. In the case of mercury present as an oxide, hydroxide, or sulfide compound, sufficient heat must be transferred to the waste to first decompose the compounds to the elemental form and then volatilize the mercury. In mercury wastes that are wastewater treatment sludges, mercury is most often present in the form of the sulfide (HgS) as a result of the use of sodium hydrosulfide treatment of mercury-bearing wastewaters. In a few instances, hydrazine is used to treat these same wastewaters; in such instances, a mercurous hydroxide sludge is generated. This latter compound can be more easily treated to yield elemental mercury because this reaction occurs more readily than the sulfide decomposition at the temperatures at which the process is normally operated. Preheated air is provided to the retort to supply the oxygen necessary for the sulfide decomposition and to enhance the heat transfer to the waste.

The equations for decomposition of both forms of mercury are presented below:

(a) $HgS + O_2 \rightarrow Hg + SO_2$

(b) $2Hg_2(OH)_2 \rightarrow 4Hg + 2H_2O + O_2$.

7.3 Description of Retorting Process

The retorting process generally consists of a retort (typically an oven) in which the waste is heated to volatilize the metal constituents, a condenser, a metals collection system, and an air pollution control system. Figures 7-1 and 7-2 show a retort system without and with a scrubber-type air pollution control system.

Trays of wastes are placed in the retort, where they are heated, and decomposition of mercury compounds and volatilization of the metallic mercury and other volatile elemental metals occur. Although most commonly carried out in an oven, retorting can also be performed in a multiple hearth furnace.

The vapor stream from the retort is either cooled in a condenser. If a scrubber is not used as an air pollution control device, an electrostatic precipitator is provided after the condenser to remove any residual metal in the exhaust vapor stream, as well as to control other potential emissions such as sulfur dioxide (SO_2), fly ash, and hydrogen chloride (HCl) vapors. Condensed metal is collected for reuse before the electrostatic precipitator.

Residual solids remaining in the retort, stripped of volatile metal contaminants, are collected and may be either directly land disposed or stabilized, to immobilize any remaining metal constituents, and then land disposed.

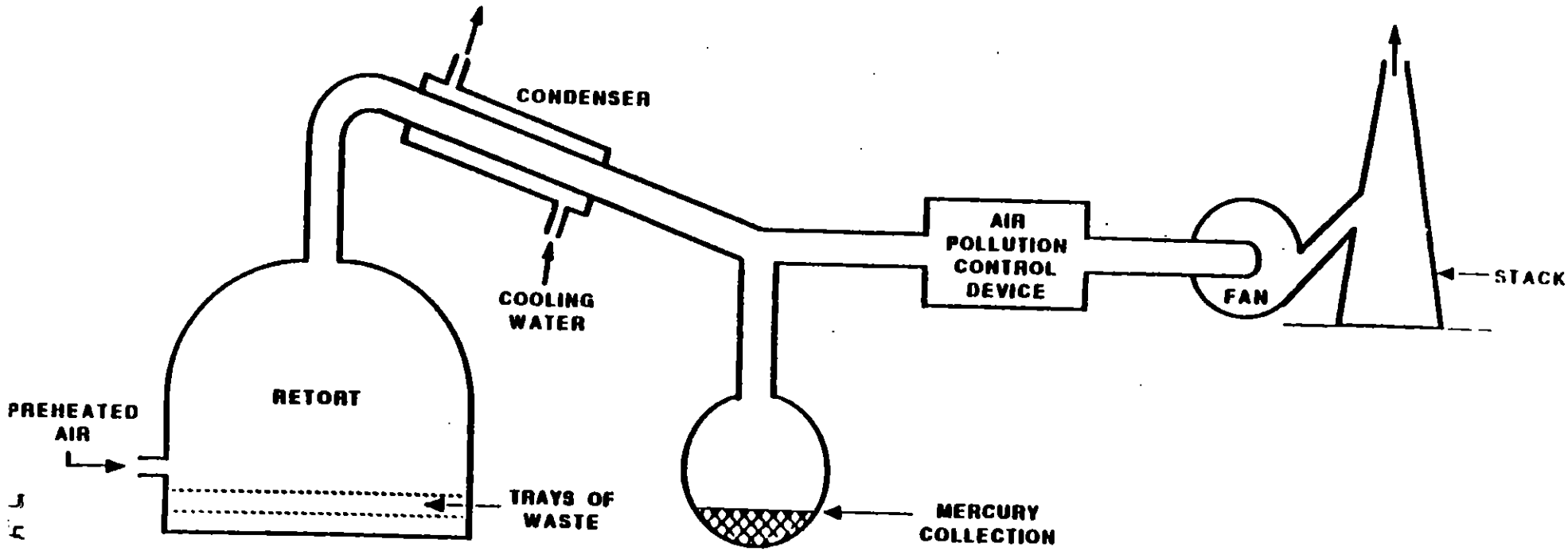

FIGURE 7-1

RETORTING PROCESS (WITHOUT WASTEWATER DISCHARGE)

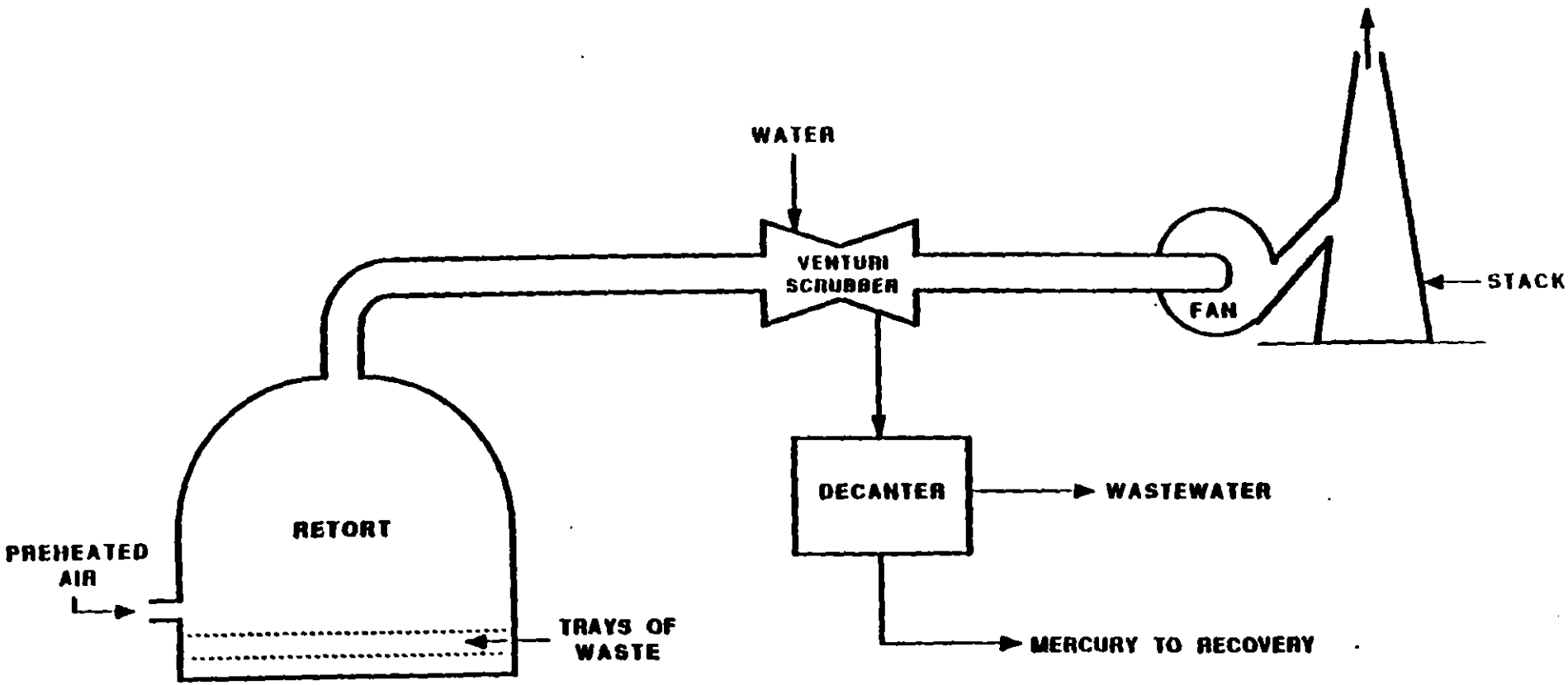

FIGURE 7-2

RETORTING PROCESS (WITH WASTEWATER DISCHARGE)

7.4 Waste Characteristics Affecting Performance (WCAPs)

In determining whether retorting will achieve the same level of performance on an untested waste as on a previously tested waste and whether performance levels can be transferred, EPA examines the following waste characteristics: (a) the concentration of undesirable volatile constituents in the waste and (b) the thermal conductivity of the waste.

7.4.1 Concentration of Undesirable Volatile Constituents

Because retorting is a recovery process, its product must meet certain purity requirements prior to reuse. If the waste contains other volatile constituents with boiling points equal to or below that of the metal(s) to be recovered, they will be volatilized and condensed along with the desired metal(s) present in the waste. These constituents may be difficult to separate from the recovered product and may affect the ability to reuse the product metal or refine it for subsequent reuse. Undesirable volatile constituents sometimes present in mercury-bearing wastes include (a) mercury chlorides, which distill unchanged in the retorting process, and other volatile metal halides; (b) arsenic oxide and arsenic trichloride; and (c) organomercury compounds, such as phenylmercuric acetate, which are not decomposed to elemental mercury by the retorting process.

For wastes containing significant levels (i.e., above 1 percent) of these contaminants, retorting may not be an appropriate technology. If the concentration of undesirable volatile constituents in the untested waste is significantly higher than that in the tested waste, the system may not achieve the same performance. Chemical pretreatment may be

required to convert mercury chlorides and organomercury compounds to mercuric sulfide and/or elemental mercury and achieve the same treatment performance, or other, more applicable treatment technologies may need to be considered for treatment of the untested waste.

7.4.2 Thermal Conductivity of the Waste

The ability to heat constituents within a waste matrix is a function of the heat transfer characteristics of the waste material. Mercury and other recoverable metals in the waste must be heated to near or above their boiling points in order to be volatilized and recovered. The rate at which heat will be transferred to the waste material is dependent on the material's thermal conductivity, which is the ratio of the conductive heat flow to the temperature gradient across the material. Thermal conductivity measurements, as part of a treatability comparison of two different wastes to be treated by a single retort system, are most meaningful when applied to wastes that are homogeneous (i.e., uniform throughout). As wastes exhibit greater degrees of nonhomogeneity, thermal conductivity becomes less accurate in predicting treatability because the measurement reflects heat flow through regions having the greatest conductivity (i.e., the path of least resistance) and not heat flow through all parts of the waste. Nevertheless, EPA believes that thermal conductivity may provide the best measure of performance of heat transfer. If the thermal conductivity of the untested waste is significantly lower than that of the tested waste, the system may not

achieve the same performance and other, more applicable treatment technologies may need to be considered for treatment of the untested waste.

7.5 Design and Operating Parameters

In assessing the effectiveness of the design and operation of a retort system, EPA examines the following parameters: (a) the retorting temperature and (b) the residence time.

7.5.1 Retorting Temperature

Temperature provides an indirect measure of the energy available (i.e., Btu/hr) to vaporize the metal of concern. The higher the temperature in the retort, the more likely it is that the metal will volatilize. The temperature must be at least equal to or greater than the boiling point of the metal. However, excessive temperatures could volatilize undesirable constituents into the product, possibly inhibiting its potential reuse. For mercury retorting, EPA monitors the retort temperature to ensure that the system is operating at the appropriate design condition (a temperature at least equal to the boiling point of mercury (674°F) but below 1000°F) and to diagnose operational problems.

7.5.2 Residence Time

The residence time impacts the amount of volatile metal(s) volatilized and recovered. It is dependent on the retort temperature and the thermal conductivity of the waste. Typical residence times in retort systems for mercury range from 4 hours to 20 hours. EPA monitors the

residence time to ensure that sufficient time is provided to effectively volatilize all of the mercury and/or other metal(s) to be removed from the waste.

7.6 References

Occidental Chemical Corp. 1987. Delisting petition, chloralkali plant, Muscle Shoals, Alabama. Submitted to U.S. Environmental Protection Agency, July 20, 1987.

Perry, R.A. 1984. Mercury recovery from contaminated wastewaters and sludges. PB 238 600.

Sittig, M. 1975. Resource recovery and recycling handbook of industrial wastes. Park Ridge, N.J.: Noyes Publications.

Versar. 1987. Waste minimization audit report-case studies of minimization of mercury bearing wastes from chloralkali plants. Prepared for U.S. Environmental Protection Agency, Office of Research and Development, Hazardous Waste Engineering Laboratory by Versar Inc., Contract No. 68-01-7053.

8. STABILIZATION OF METALS

8.1 Applicability

Stabilization is a treatment technology applicable to wastes containing leachable metals and having a high filterable solids content, low total organic carbon (TOC) content, and low oil and grease content. This technology is commonly used to treat residuals generated from treatment of electroplating wastewaters and incineration ash residues. For wastes with recoverable levels of metals, high temperature metals recovery and retorting technologies may be applicable.

Stabilization refers to a broad class of treatment processes that immobilize hazardous constituents in a waste. Solidification and fixation are other terms that are sometimes used synonymously for stabilization or to describe specific variations within the broader class of stabilization. Related technologies are encapsulation and thermoplastic binding. However, EPA considers these technologies to be distinct from stabilization in that their operational principles are significantly different.

8.2 Underlying Principles of Operation

The basic principle of operation for stabilization is that leachable metals in a waste are immobilized following the addition of stabilizing agents and other chemicals. The reduced leachability is accomplished by the formation of a lattice structure and/or chemical bonds that bind the metals to the solid matrix and thereby limit the amount of metal constituents that can be leached when water or a mild acid solution comes into contact with the waste material.

The two principal stabilization processes used are cement-based and lime/pozzolan-based processes. A brief discussion of each is provided below. In both cement-based or lime/pozzolan-based techniques, the stabilizing process can be modified through the use of additives, such as silicates, that control curing rates, reduce permeability, and enhance the properties of the solid material.

8.2.1 Portland Cement-Based Process

Portland cement is a mixture of powdered oxides of calcium, silica, aluminum, and iron, produced by kiln burning of materials rich in calcium and silica at high temperatures (i.e., 1,400 to 1,500°C (2,552 to 2,732°F)). When the anhydrous cement powder is mixed with water, hydration occurs and the cement begins to set. The chemistry involved is complex because many different reactions occur depending on the composition of the cement mixture.

As the cement begins to set, a colloidal gel of indefinite composition and structure is formed. Over time, the gel swells and forms a matrix composed of interlacing, thin, densely packed silicate fibrils. Constituents present in the waste slurry (e.g., hydroxides and carbonates of various metals) are incorporated into the interstices of the cement matrix. The high pH of the cement mixture tends to keep metals in the form of insoluble hydroxide and carbonate salts. It has been hypothesized that metal ions may also be incorporated into the crystal structure of the cement matrix, but this hypothesis has not been verified.

8.2.2 Lime/Pozzolan-Based Process

Pozzolan, which contains finely divided, noncrystalline silica (e.g., fly ash or components of cement kiln dust), is a material that is not cementitious in itself, but becomes so upon the addition of lime. Metals in the waste are converted to insoluble silicates or hydroxides and are incorporated into the interstices of the binder matrix, thereby inhibiting leaching.

8.3 Description of Stabilization Process

The stabilization process consists of a weighing device, a mixing unit, and a curing vessel or pad. Commercial concrete mixing and handling equipment is typically used in stabilization processes. Weighing conveyors, metering cement hoppers, and mixers similar to concrete batching plants have been adapted in some operations. When extremely dangerous materials are treated, remote-control and in-drum mixing equipment, such as is used with nuclear waste, is employed.

In most stabilization processes, the waste, stabilizing agent, and other additives, if used, are mixed in a mixing vessel and then transferred to a curing vessel or pad and allowed to cure. The actual operation (equipment requirements and process sequencing) depends on several factors including the nature of the waste, the quantity of the waste, the location of the waste in relation to the disposal site, the particular stabilization formulation used, and the curing rate. Following curing, the stabilized solid formed is recovered from the processing equipment and disposed of.

8.4 Waste Characteristics Affecting Performance (WCAPs)

In determining whether stabilization will achieve the same level of performance on an untested waste as on a previously tested waste, and whether performance levels can be transferred, EPA examines the following waste characteristics: (a) the concentration of fine particulates, (b) the concentration of oil and grease, (c) the concentration of organic compounds, and (d) the concentration of sulfate and chloride compounds.

8.4.1 Concentration of Fine Particulates

For both cement-based and lime/pozzolan-based processes, very fine solid materials (i.e., those that pass through a No. 200 mesh sieve (less than 74 um particle size)) weaken the bonding between waste particles and the cement or lime/pozzolan binder by coating the particles. This coating inhibits chemical bond formation, thereby decreasing the resistance of the material to leaching. If the concentration of fine particulates in an untested waste is significantly higher than in the tested waste, the system may not achieve the same performance. Pretreatment of the waste may be required to reduce the fine particulate concentration and achieve the same treatment performance, or other, more applicable treatment technologies may need to be considered for treatment of the untested waste.

8.4.2 Concentration of Oil and Grease

Oil and grease in both cement-based and lime/pozzolan-based systems results in the coating of waste particles and the weakening of the bonding between the particle and the stabilizing agent, thereby

decreasing the resistance of the material to leaching. If the concentration of oil and grease in the untested waste is significantly higher than in the tested waste, the system may not achieve the same performance. Pretreatment may be required to reduce the oil and grease concentration and achieve the same treatment performance, or other, more applicable treatment technologies may need to be considered for treatment of the untested waste.

8.4.3 Concentration of Organic Compounds

Organic compounds in the waste interfere with the stabilization chemical reactions and bond formation, thus inhibiting curing of the stabilized material. This results in a stabilized waste having decreased resistance to leaching. If the total organic carbon (TOC) content of the untested waste is significantly higher than that of the tested waste, the system may not achieve the same performance. Pretreatment may be required to reduce the TOC and achieve the same treatment performance, or other, more applicable treatment technologies may need to be considered for treatment of the untested waste.

8.4.4 Concentration of Sulfate and Chloride Compounds

Sulfate and chloride compounds interfere with the stabilization chemical reactions, weakening bond strength and prolonging setting and curing time. Sulfate and chloride compounds may reduce the dimensional stability of the cured matrix, thereby increasing leachability potential. If the concentration of sulfate and chloride compounds in the untested waste is significantly higher than in the tested waste, the

system may not achieve the same performance. Pretreatment may be required to reduce the sulfate and chloride concentrations and achieve the same treatment performance, or other, more applicable treatment technologies may need to be considered for treatment of the untested waste.

8.5 Design and Operating Parameters

In assessing the effectiveness of the design and operation of a stabilization system, EPA examines the following parameters: (a) the amount and type of stabilizing agent and additives, (b) the degree of mixing, (c) the residence time, and (d) the stabilization temperature and humidity.

8.5.1 Amount and Type of Stabilizing Agent and Additives

The stabilizing agent and additives used will determine the chemistry and structure of the stabilized material and therefore its leachability. Stabilizing agents and additives must be carefully selected based on the chemical and physical characteristics of the waste to be stabilized. To select the most effective type of stabilizing agent and additives, the waste should be tested in the laboratory with a variety of these materials to determine the best combination.

The amount of stabilizing agent and additives is a critical parameter in that sufficient stabilizing materials are necessary to properly bind the waste constituents of concern, making them less susceptible to leaching. The appropriate weight ratios of stabilizing agent and additives to waste are established empirically by setting up a series of

laboratory tests that allow separate leachate testing of different mix ratios. The ratio of water to stabilizing agent (including water in waste) will also impact the strength and leaching characteristics of the stabilized material. Too much water will cause low strength; too little will make mixing difficult and, more important, may not allow the chemical reactions that bind the hazardous constituents to be fully completed. EPA evaluates the amount of stabilizing agent, water, and other additives used in the stabilization process to ensure that sufficient stabilizing materials are added to the waste to effectively immobilize the waste constituents of concern.

8.5.2 Degree of Mixing

Mixing is necessary to ensure homogeneous distribution of the waste, stabilizing agent, and additives. Both undermixing and overmixing are undesirable. The first condition results in a nonhomogeneous mixture; therefore, areas will exist within the waste where waste particles are neither chemically bonded to the stabilizing agent nor physically held within the lattice structure. Overmixing, on the other hand, may inhibit gel formation and ion adsorption in some stabilization systems. Optimal mixing conditions generally are determined through laboratory tests. The quantifiable degree of mixing is a complex assessment that includes, among other things, the amount of energy supplied, the length of time the material is mixed, and the related turbulence effects of the specific size and shape of the mix tank or vessel. This is beyond the scope of simple measurement. EPA, however, evaluates the degree of mixing

qualitatively by considering whether mixing is provided and whether the type of mixing device is one that could be expected to achieve homogeneous distribution of the waste, stabilizing agent, and additives.

8.5.3 Residence Time

The residence time or duration of curing ensures that the waste particles have had sufficient time in which to incorporate into lattice structures and/or form stable chemical bonds. The time necessary for complete stabilization depends upon the waste and the stabilization process used. The performance of the stabilized waste (i.e., the levels of waste constituents in the leachate) will be highly dependent upon whether complete stabilization has occurred. Typical residence times range from 7 to 28 days. EPA monitors the residence time to ensure that sufficient time is provided to effectively stabilize the waste.

8.5.4 Stabilization Temperature and Humidity

Higher temperatures and lower humidity increase the rate of curing by increasing the rate of evaporation of water from the stabilization mixtures. If temperatures are too high, however, the evaporation rate can be excessive and result in too little water being available for completion of the stabilization reaction. EPA monitors the stabilization temperature and humidity continuously, if possible, to ensure that the system is operating at the appropriate design conditions and to diagnose operational problems.

8.6 References

Ajax Floor Products Corp. n.d. Product literature: technical data sheets, Hazardous Waste Disposal System. P.O. Box 161, Great Meadows, N.J. 07838.

Austin, G.T. 1984. Shreve's chemical process industries, 5th ed. New York: McGraw-Hill Book Co..

Bishop, P.L., Ransom, S.B., and Grass, D.L. 1983. Fixation mechanisms in solidification/stabilization of inorganic hazardous wastes. In Proceedings of the 38th Industrial Waste Conference, 10-12 May 1983, at Purdue University, West Lafayette, Indiana.

Conner, J.R. 1986. Fixation and solidification of wastes. Chemical Engineering. Nov. 10, 1986.

Cullinane, M.J., Jr., Jones, L.W., and Malone, P.G. 1986. Handbook for stabilization/solidification of hazardous waste. U.S. Army Engineer Waterways Experiment Station. EPA Report no. 540/2-86/001. Cincinnati, Ohio: U.S. Environmental Protection Agency.

Electric Power Research Institute. 1980. FGD sludge disposal ,anual, 2nd ed. Prepared by Michael Baker Jr., Inc. EPRI CS-1515 Project 1685-1. Palo Alto, Calif.: Electric Power Research Institute.

Malone, P.G., Jones, L.W., and Burkes, J.P. Application of solidification/stabilization technology to electroplating wastes. Office of Water and Waste Management. SW-873. Washington, D.C.: U.S. Environmental Protection Agency.

Mishuck, E., Taylor, D.R., Telles, R., and Lubowitz, H. 1984. Encapsulation/fixation (E/F) mechanisms. Report no. DRXTH-TE-CR-84298. Prepared by S-Cubed under Contract No. DAAK11-81-C-0164.

Pojasek RB. 1979. Solid-Waste Disposal: Solidification. Chemical engineering 86(17): 141-145.

USEPA. 1980. U.S. Environmental Protection Agency. U.S. Army Engineer Waterways Experiment Station. Guide to the disposal of chemically stabilized and solidified Waste. Prepared for MERL/ORD under Interagency Agreement No. EPA-IAG-D4-0569. PB 81 181 505. Cincinnati, Ohio.

9. AEROBIC BIOLOGICAL TREATMENT

9.1 Applicability

Aerobic biological treatment is a treatment technology applicable to wastewaters containing biodegradable organic constituents. Four of the most common aerobic biological treatment processes are (a) activated sludge, (b) aerated lagoon, (c) trickling filter, and (d) rotating biological contactor (RBC). The activated sludge and aerated lagoon processes are suspended-growth processes in which microorganisms are maintained in suspension with the liquid. The trickling filter and the RBC are attached-growth processes in which microorganisms grow on any inert medium such as rocks, slag, or specifically designed ceramic or plastic materials. This section discusses these four processes as well as the powdered activated carbon (PAC) adsorption process, which is a variation of the activated sludge treatment.

9.2 Underlying Principles of Operation

The basic principal of operation for aerobic biological treatment processes is that living, oxygen-requiring microorganisms decompose organic constituents into carbon dioxide, water, nitrates, sulfates, simpler low molecular weight organic byproducts, and cellular biomass. Wastes that can be degraded by a given species or genus of organisms may be very limited. A mixture of organisms may be required to achieve effective treatment, especially for wastes containing mixtures of organic compounds. Nutrients such as nitrogen and phosphorus are also required to aid in the biodegradation process.

The aerobic biodegradation process can be represented by the following generic equation:

$$C_x H_y + O_2 \xrightarrow[\text{nutrients}]{\text{microorganisms}} H_2O + CO_2 + \text{cellular biomass.}$$

Microorganisms produce enzymes that catalyze the biodegradation reactions, degrading the organic waste to obtain energy for cell metabolism and cell growth.

Aerobic biological treatment of wastewaters containing organic constituents results in the net accumulation of a biomass of expired microorganisms consisting mainly of cell protein. However, the cellular biomass or sludges may also contain entrained constituents from the wastewater or partially degraded constituents. These sludges must be periodically removed (wasted) to maintain proper operation of the aerobic biological treatment system.

9.3 Description of Biological Treatment Processes

9.3.1 Activated Sludge

The activated sludge process is currently the most widely used biological treatment process. This is partly the result of the fact that recirculation of the biomass, which is an integral part of the process, allows microorganisms to adapt to changes in wastewater composition with a relatively short acclimation time and also allows a greater degree of control over the acclimated bacterial population.

An activated sludge system consists of an equalization basin, a settling tank, an aeration basin, a clarifier, and a sludge recycle line. Wastewater is homogenized in an equalization basin to reduce

variations in the feed, which may cause process upsets of the microorganisms and diminish treatment efficiency. Settleable solids are then removed in a settling tank.

Next wastewater enters an aeration basin, where an aerobic bacterial population is maintained in suspension and oxygen, as well as nutrients, is provided. The contents of the basin are referred to as the mixed liquor. Oxygen is supplied to the aeration basin by mechanical or diffused aeration, which also aids in keeping the microbial population in suspension. The mixed liquor is continuously discharged from the aeration basin into a clarifier, where the biomass is separated from the treated wastewater. A portion of the biomass is recycled to the aeration basin to maintain an optimum concentration of acclimated microorganisms in the aeration basin. The remainder of the separated biomass is discharged or "wasted." The biomass may be further dewatered on sludge drying beds or by sludge filtration (which is further discussed in Section 21) prior to disposal. The clarified effluent is discharged. A schematic diagram of an activated sludge treatment system is shown in Figure 9-1.

The recycled biomass is referred to as activated sludge. The term "activated" is used because the biomass contains living and acclimated microorganisms that metabolize and assimilate organic material at a higher rate when returned to the aeration basin. This occurs because of the low food-to-microorganism ratio in the sludge from the clarifier.

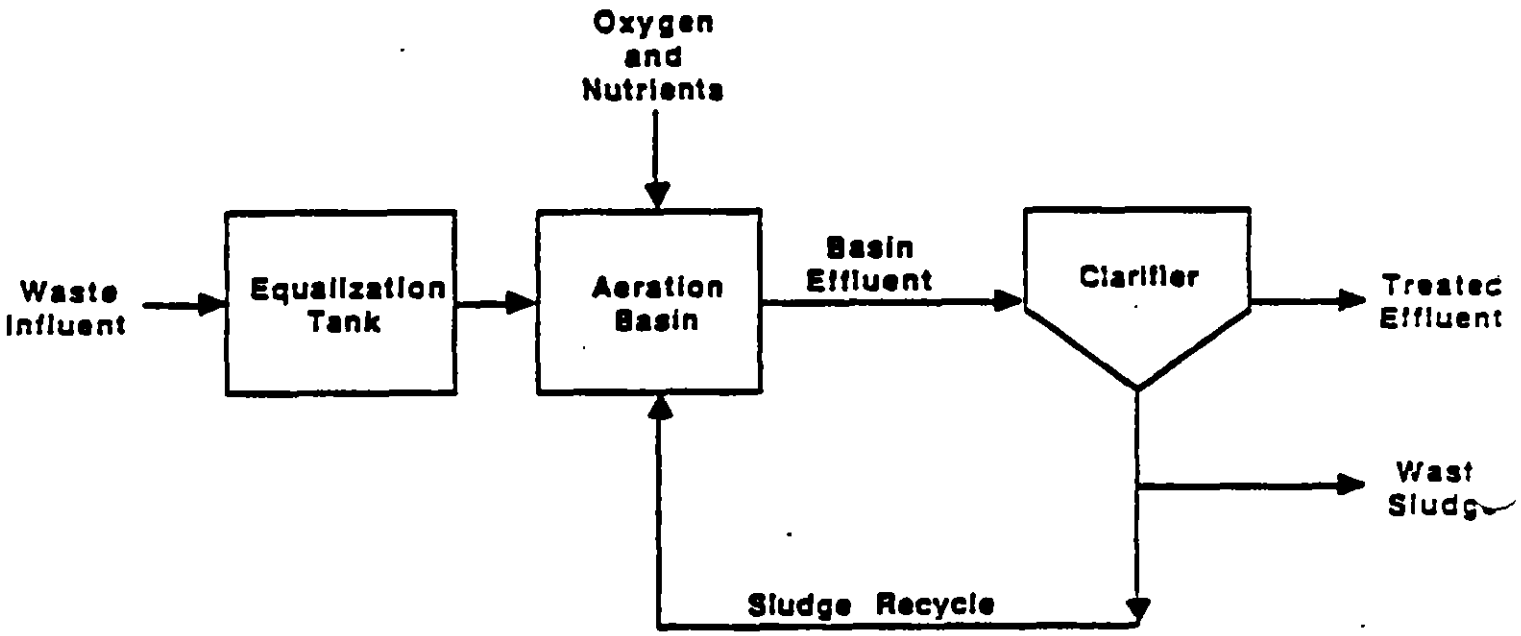

Figure 9-1
Activated Sludge

An important variation on the activated sludge process is the Powdered Activated Carbon Treatment (PACT) process. This process offers a combined treatment and pretreatment system in which noncompatible and toxic constituents are adsorbed onto activated carbon, while microorganism-compatible waste remains in solution. Powdered activated carbon is added directly to the aeration basin of the activated sludge treatment system. Overall removal efficiency is improved because compounds that are not readily biodegradable or that are toxic to the microorganisms are adsorbed onto the surface of the powdered activated carbon. The carbon is removed from the wastewater in the clarifier along with the biological sludge. Usually, the activated carbon is recovered, regenerated, and recycled.

9.3.2 Aerated Lagoon

Like an activated sludge system, an aerated lagoon is a suspended-growth process. The aerated lagoon system consists of a large pond or tank that is equipped with mechanical aerators to maintain an aerobic environment and to prevent settling of the suspended biomass. Initially, the population of microorganisms in an aerated lagoon is much lower than that in an activated sludge system because there is no sludge recycle. Therefore, a significantly longer residence time is required to achieve the same effluent quality. However, this longer residence time may be an advantage when complex organic chemicals are to be degraded. Also, the microorganisms in aerated lagoons are more resistant to process upsets caused by feed variations than those in activated sludge systems because

of the larger tank volumes and longer residence times used. The effluent from the aerated lagoon may flow to a settling tank for removal of suspended solids. Alternatively, the mechanical aerators in the system may be shut off for a period of time to facilitate settling prior to discharge of the effluent. The settled solids are generally dewatered prior to disposal.

9.3.3 Trickling Filters

A trickling filter is an attached-growth biological treatment process. The system consists of an equalization basin, a settling tank, a filter medium, an influent wastewater distribution system, an under drain system, a clarifier, and a recirculation line. The filter medium consists of a bed of an inert material to which the microorganisms attach themselves and through which the wastewater is percolated. Rocks or synthetic material such as plastic rings and saddles are typically used as filter media. Following equalization and settling of settleable solids in the wastewater, it is distributed over the top of the filter medium by a rotating distribution arm or a fixed distributor system. The wastewater forms a thin layer as it flows downward through the filter and over the microorganism layer on the surface of the medium. As the distribution arm rotates, the microorganism layer is alternately exposed to a flow of wastewater and air. In the fixed distributor system, the wastewater flow is cycled on and off at a specified dosing rate to ensure that an adequate supply of oxygen is available to the microorganisms. Oxygen from air reaches the microorganisms through the void spaces in the media.

A trickling filter system is typically used as a roughing filter to reduce the organic loading on a downstream activated sludge process. Trickling filters can be used for the treatment of wastewaters that could potentially produce "bulking" sludge (i.e., a sludge with poor settling characteristics and poor compactability in an activated sludge process) because the microbial solids that slough off the trickling filter medium are relatively dense and can be readily removed in a clarifier.

9.3.4 Rotating Biological Contactor (RBC)

A rotating biological contactor (RBC) consists of a series of closely spaced, parallel disks that are rotated at an average rate of 2 to 5 revolutions per minute while submerged to 40 percent of their diameters in a contact tank containing wastewater. The disks are constructed of polystyrene, polyvinyl chloride, or similar materials. Each disk is covered with a biological slime that degrades dissolved organic constituents present in the wastewater. As the disk is rotated out of the tank, it carries a film of the wastewater into the air, where oxygen is available for aerobic biological decomposition. As excess biomass is produced, it sloughs off the disk and is separated from the treated effluent in a clarifier. The sloughing off process is similar to that which occurs in a trickling filter. There is no recycle of sludges or recirculation of treated effluent in an RBC process. Several RBCs are often operated in series, with the effluent from the last RBC being discharged. Biological solids are usually dewatered prior to disposal.

9.4 Waste Characteristics Affecting Performance (WCAPs).

In determining whether aerobic biological treatment will achieve the same level of performance on an untested waste as on a previously tested waste and whether performance levels can be transferred, EPA examines the following waste characteristics: (a) the ratio of the biological oxygen demand-to-total organic carbon content, (b) the concentration of surfactants, and (c) the concentrations of toxic constituents and waste characteristics.

9.4.1 The Ratio of the Biological Oxygen Demand-to-Total Organic Carbon Content

Because organic constituents in the waste effectively serve as a feed supply for the microorganisms, it is necessary that a significant percentage be biodegradable. If they are not (i.e., a significant fraction of the organic constituents are refractory), it will be difficult for the microorganisms to successfully acclimate to the waste and achieve effective treatment. The percentage of biodegradable organics can be estimated by the ratio of the biological oxygen demand (BOD) to the total organic carbon (TOC) content. The biological oxygen demand is a measure of the amount of oxygen required for complete microbial oxidation of biodegradable organics. If the ratio of BOD to TOC in an untested waste is significantly lower than that in the tested waste, the system may not achieve the same performance and other, more applicable technologies may need to be considered for treatment of the untested waste.

9.4.2 Concentration of Surfactants

Surfactants can affect aerobic biological treatment performance by forming a film on organic constituents, thereby establishing a barrier to oxygen transfer and effective biodegradation. If the concentration of surfactants in an untested waste is significantly higher than that in the tested waste, the system may not achieve the same performance and other, more applicable technologies may need to be considered for treatment of the untested waste.

9.4.3 Concentration of Toxic Constituents and Waste Characteristics

A number of constituents and waste characteristics have been identified as potentially toxic to microorganisms. Specific toxic concentrations have not been determined for most of these constituents and waste characteristics. The constituents and waste characteristics found to be potentially toxic to microorganisms include metals and oil and grease, as well as high concentrations of total dissolved solids, ammonia, and phenols. If the concentration of toxic constituents and waste characteristics in an untested waste is significantly higher than that in the tested waste, the system may not achieve the same performance and other, more applicable technologies may need to be considered for treatment of the untested waste.

9.5 Design and Operating Parameters

In assessing the effectiveness of the design and operation of an aerobic biological treatment system, EPA examines the following parameters: (a) the amount of nutrients, (b) the concentration of

dissolved oxygen, (c) the food-to-microorganism ratio, (d) the pH, (e) the aerobic biological treatment temperature, (f) the mean cell residence time, (g) the hydraulic loading rate, (h) the settling time, and (i) the degree of mixing.

9.5.1 Amount of Nutrients

Nutrient addition is important in controlling the growth of microorganisms because an insufficient amount of nutrients results in poor microbial growth with poor biodegradation of organic constituents. The principal inorganic nutrients used are nitrogen and phosphorus. In addition, trace amounts of potassium, calcium, sulfur, magnesium, iron, and manganese are also used for optimum microbial growth. The percent distribution of nitrogen and phosphorus added to microorganisms varies with the age of the organism and the particular environmental conditions. The total amount of nutrients required depends on the net mass of organisms produced.

EPA monitors the amount of nutrients added and their method of addition to the wastewater to ensure that a sufficient supply is provided to achieve an effective growth of microorganisms.

9.5.2 Concentration of Dissolved Oxygen

A sufficient concentration of dissolved oxygen (DO) is necessary to metabolize and degrade dissolved organic constituents. The DO concentration is controlled by adjusting the aeration rate. The aeration rate must be adequate to provide a sufficient DO concentration to satisfy the BOD requirements of the waste, as well as to provide adequate mixing

to keep the microbial population in suspension (for activated sludge and aerated lagoon processes). EPA monitors the DO concentrations continuously, is possible, to ensure that the system is operating at the appropriate design condition and to diagnose operational problems.

9.5.3 Food-to-Microorganism Ratio

The food-to-microorganism (F/M) ratio applies only to activated sludge systems and is a measure of the amount of biomass available to metabolize the influent organic loading to the aeration unit. This ratio can be determined by dividing the influent BOD concentration by the concentration of active biomass, also referred to as the mixed liquor volatile suspended solids (MLVSS). The F/M ratio is controlled by adjusting the wastewater feed rate or the sludge recycle rate. If the F/M ratio is too high, too few microorganisms will be available to degrade the organics. EPA periodically analyzes the influent BOD and the aeration unit's MLVSS concentrations to ensure that the system is operating at the appropriate design condition.

9.5.4 pH

Generally, neutral or slightly alkaline pH favors microorganism growth. The optimum range for most microorganisms used in aerobic biological treatment systems is between 6 and 8. Treatment effectiveness is generally insensitive to changes within this range. However, pH values outside the range can lower treatment performance. EPA monitors the pH continuously, if possible, to ensure that the system is operating at the appropriate design condition and to diagnose operational problems.

9.5.5 Aerobic Biological Treatment Temperature

Microbial growth can occur under a wide range of temperatures, although the majority of the microbial species used in aerobic biological treatment processes are active between 20 and 35°C (69 to 95°F). The rate of biochemical reactions in cells increases with temperature up to a maximum above which the rate of activity declines as enzyme denaturation occurs and microorganisms either die off or become less active. EPA monitors the aerobic biological treatment temperature continuously, if possible, to ensure that the system is operating at the appropriate design condition and to diagnose operational problems.

9.5.6 Mean Cell Residence Time

In activated sludge and aerated lagoon systems, the mean cell residence time (MCRT) or sludge age is the length of time organisms are retained in the aeration unit before being drawn off as waste sludge. By controlling the MCRT, the growth phase of the microbial population can be controlled. The MCRT must be long enough to allow the organisms in the aeration unit to reproduce. The MCRT is determined by dividing the total active microbial mass in the aeration unit (MLVSS) by the total quantity of microbial mass withdrawn daily (wasted). EPA monitors the MCRT to ensure that an effective amount of microorganisms is present in the aeration unit.

9.5.7 Hydraulic Loading Rate

The hydraulic loading rate determines the length of time the organic constituents are in contact with the microorganisms and, hence, the

extent of biodegradation that occurs. In trickling filters, the hydraulic loading rate also determines the shear velocities on the microbial layer. Excessively high hydraulic loading rates may wash away the microbial layer faster than it can grow back. However, the hydraulic loading rate must be high enough to keep the microbes moist and to remove dead or dying microbes that have lost their ability to cling to the filter media. For all aerobic biological treatment processes, the hydraulic loading rate is controlled by adjusting the wastewater feed rate. In addition, for RBCs, the hydraulic loading rate can be controlled by changing the disk speed or adjusting the submersion depth. EPA monitors the wastewater feed rates to ensure that the hydraulic loading provides sufficient time to achieve an effective biodegradation of organic constituents in the wastewater.

9.5.8 Settling Time

Adequate settling time must be provided to separate the biological solids from the mixed liquor. Activated sludge systems cannot function properly if the solids cannot be effectively separated and a portion returned to the aeration basin. EPA monitors the settling time to ensure effective solids removal.

9.5.9 Degree of Mixing

Mixing provides greater uniformity of the wastewater feed in the equalization basin to reduce variations that may cause process upsets of the microorganisms and diminish treatment efficiency. For activated sludge and aerated lagoon systems, sufficient aeration in the aeration

unit provides mixing to ensure adequate contact between the microorganisms and the organic constituents in the wastewater. The quantifiable degree of mixing is a complex assessment that includes, among other things, the amount of energy supplied, the length of time the material is mixed, and the related turbulence effects of the specific size and shape of the mixing unit. This is beyond the scope of simple measurement. EPA, however, evaluates the degree of mixing qualitatively by considering whether mixing is provided and whether the type of mixing device is one that could be expected to achieve uniform mixing of the wastewater.

9.6 References

Barley, J., and Ollis, D. 1977. Biochemical engineering fundamentals. New York: McGraw-Hill Book Co.

Burchett, M., and Tshobanoglous, G. 1974. Facilities for controlling the activated sludge process by mean cell residence time. Journal Water Pollution Control Federation. Vol. 46, no. 5 (May 1974), p. 973.

Clark, J.W., Viessman, W., and Hammer, M. 1977. Water supply and pollution control. New York: Harper & Row, Publishers.

Eckenfelder Jr., W.W., Patoczka, J., and Watkins, A. 1985. Wastewater treatment. Chemical engineering. September 2, 1985.

Johnson, S.J. 1978. Biological treatment. Unit operation for treatment of hazardous industrial wastes. Park Ridge, N.J.: Noyes Data Corporation.

Kobayashi, H., and Rittmann, B. 1982. Microbial removal of hazardous organic compounds. Environmental Science and Technology. Vol. 16, No. 3, pp. 170-183.

Metcalf & Eddy, Inc. 1979. Wastewater engineering: treatment, disposal, reuse. New York: McGraw-Hill Book Co.

Nemerow, N.L. 1978. Industrial water pollution origins, characteristics, and treatment. Reading, Mass.: Addison-Wesley Publishing Company.

Perry, R., and Green, D. 1984. Chemical engineers handbook. 6th ed. New York: McGraw-Hill Book Co.

Rittmann, B. 1987. Aerobic biological treatment. Environmental Science and Technology. February 1987. p. 128.

USEPA. 1986. U.S. Environmental Protection Agency. Best demonstrated available technology background document for F001-F005 spent solvents. Vol I, EPA/530-SW-86-056. pp. 4-43. Washington, D.C.: U.S. Environmental Protection Agency.

10. BATCH DISTILLATION

10.1 Applicability

Batch distillation is one of several thermal treatment technologies applicable to the treatment of wastes containing organics that are volatile enough to be removed by the application of heat. This technology can be used to treat wastes having a high percentage of organics. Use of this technology results in an organic product stream that may be reusable directly or after further treatment and a bottom stream that is often incinerated.

10.2 Underlying Principles of Operation

As with other forms of distillation, the basic principle of batch distillation is the separation of a liquid mixture into various components by a process of vaporization-condensation. The more volatile constituents, which are vaporized, are then condensed and either reused or further treated by liquid injection incineration; the less volatile constituents, which do not vaporize significantly, may also be reused, but are more often incinerated.

An integral part of the theory of batch distillation is the principle of vapor-liquid equilibrium. When a liquid mixture of two or more components is heated, the vapor phase present above the liquid phase becomes more concentrated in the more volatile constituents (i.e., those having higher vapor pressures). The vapor phase above the liquid phase is then cooled to yield a condensate that is also more concentrated in the more volatile components. The remaining liquid phase is richer in

the less volatile components. The degree of separation of components depends on the relative differences in the vapor pressures of the constituents; the larger the difference in the vapor pressures, the more easily the separation can be accomplished.

If the difference between the vapor pressures is extremely large, a single equilibrium stage of vaporization and condensation may achieve a significant separation of the constituents. (Refer to the fractionation technology, Section 12, for a discussion of equilibrium stages.) Typically, batch distillation units contain only one equilibrium stage and are thus limited in the degree of separation by the relative volatilities of the constituents. The greater the difference in component volatilities, the more likely it is that batch distillation will be effective.

The vapor-liquid equilibrium of the waste components can be expressed as relative volatility, which is the ratio of the vapor-to-liquid concentrations of a constituent divided by the ratio of the vapor-to-liquid concentrations of another constituent. The relative volatility is a direct indicator of the ease of separation. If the numerical value is 1, then separation using distillation is impossible because the constituents have the same concentrations in the vapor and liquid phases. When the relative volatility is 1, the liquid mixture is called an azeotrope. Separation becomes easier as the value of the relative volatility becomes increasingly different from unity. As more of the

volatiles are removed, the temperature must be continually raised to vaporize the remaining waste.

In batch distillation, pressurized steam is usually the source of the heat. The process usually takes place at temperatures lower than approximately 340°F (corresponding to steam at a pressure of 120 psig) when atmospheric pressure exists in the distillation unit. For batch distillation units operating under a vacuum, the constituents of concern that can be volatilized could have boiling points up to 450°F at atmospheric pressure.

10.3 Description of Batch Distillation Process

A batch distillation unit consists of a steam-jacketed vessel, a condenser, and a product receiver. Figure 10-1 is a schematic showing the major components of a batch distillation unit. The steam jacket provides the heat required to vaporize the volatil constituents in the liquid fraction of the waste. The rising vapor is collected in the condenser, cooled, and condensed. The liquid product stream is then routed to the product receiver.

It is important to note that this technology treats wastes by vaporizing constituents, not destroying them. Accordingly, an integral part of this technology is a condensation system to collect the organics, as well as an air emission control system to collect those organics that are not condensed. The cooling load of the condenser is calculated in the design to ensure that the product recovery rate is maximized and emissions from condenser venting are minimized.

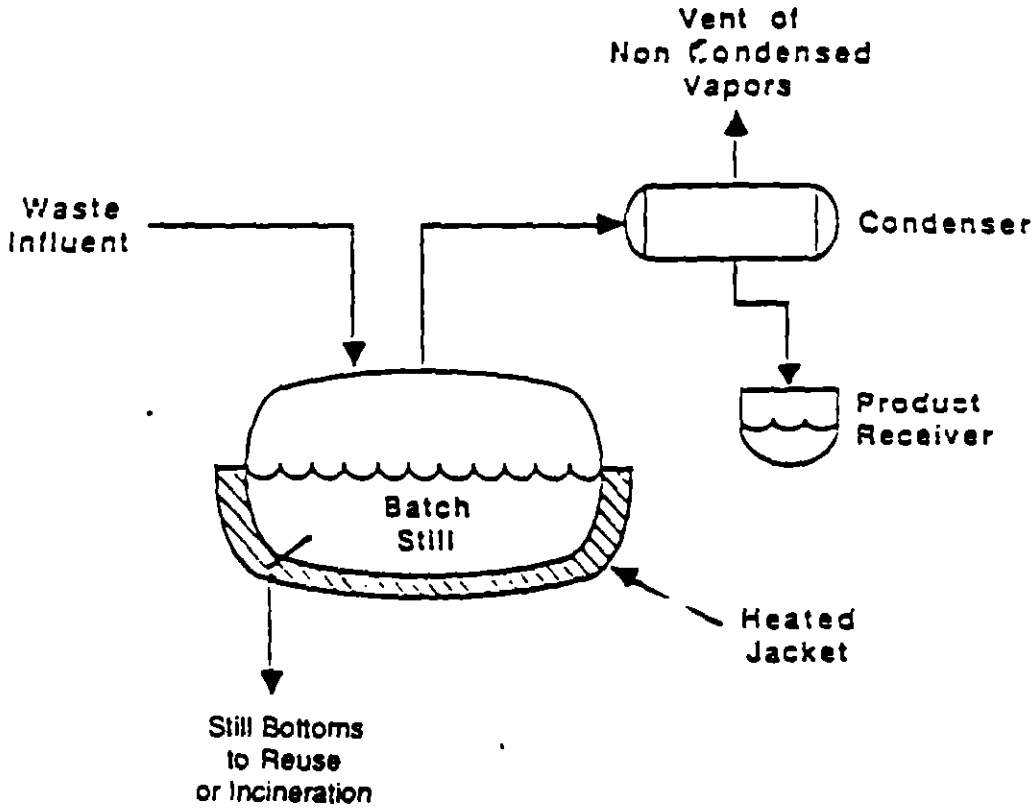

Figure 10-1
Batch Distillation

The "bottoms," which are the least volatile constituents of the waste, are withdrawn from the bottom of the batch still. Because batch distillation is used to remove the volatile organics from wastes, the bottoms are reduced in volatile organic content. However, the bottoms generally require additional treatment, such as incineration for residual, less volatile organics, prior to disposal.

10.4 Waste Characteristics Affecting Performance (WCAPs)

In determining whether batch distillation will achieve the same level of performance on an untested waste as on a previously tested waste and whether performance levels can be transferred, EPA examines the following waste characteristics: (a) the thermal conductivity of the waste, (b) the component boiling points, and (c) the concentration of volatile components.

10.4.1 Thermal Conductivity of the Waste

A major factor determining whether a particula· constituent will volatilize is the transfer of heat through the waste. For batch distillation, heat transfer is accomplished principally by conduction when the source of heat is indirect steam and by both convection and conduction when the heat source is direct steam injection.

EPA examined both methods of heat transfer and believes that conduction would be the primary cause of heat transfer differences between wastes. Heat flow by conduction is proportional to the temperature gradient across the material. The proportionality constant, referred to as the thermal conductivity, is a property of the material to

be distilled. With regard to convection, EPA believes that the amount of heat transferred by convection will generally be more a function of the system design than of the waste itself.

Thermal conductivity measurements, as part of a treatability comparison for two different wastes to be treated by a single batch distillation unit, are most meaningful when applied to wastes that are homogeneous (i.e., uniform throughout). As wastes exhibit greater degrees of nonhomogeneity, thermal conductivity becomes less accurate in predicting treatability because the measurement essentially reflects heat flow through regions having the greatest conductivity (i.e., the path of least resistance) and not heat flow through all parts of the waste. Nevertheless, EPA believes that thermal conductivity may provide the best measure of performance transfer. If the thermal conductivity of an untested waste is significantly lower than that of the tested waste, the system may not achieve the same performance and other, more applicable treatment technologies may need to be considered for treatment of the untested waste.

10.4.2 Component Boiling Points

As noted earlier, the greater the ratio of volatility of the waste constituents, the more easily the separation of these constituents can proceed. This ratio is called relative volatility. EPA recognizes, however, that relative volatilities cannot be measured or calculated directly for the types of wastes generally treated by batch distillation. This is because the wastes usually consist of a myriad of components, all

with different vapor pressure-versus-temperature relationships. However, because the volatility of components is usually inversely proportional to their boiling points (i.e., the higher the boiling point, the lower the volatility), EPA uses the boiling point of waste components as a surrogate waste characteristic for relative volatility. If the differences in boiling points between the more volatile and less volatile constituents are significantly lower in the untested waste than in the tested waste, the system may not achieve the same performance and other, more applicable treatment technologies may need to be considered for treatment of the untested waste.

10.4.3 *Concentration of Volatile Components*

The concentration of volatile components is a measure of the maximum fraction of the waste that can be expected to volatilize in the batch still. A relatively low concentration of volatile components implies that most of the waste may become bottoms (i.e., is nonvolatile). If the concentration of volatile components in the untested waste is significantly lower than that in the tested waste, the system may not achieve the same performance. Higher temperatures may be required to volatilize less volatile components and achieve the same treatment performance, or other, more applicable treatment technologies may need to be considered for treatment of the untested waste.

10.5 Design and Operating Parameters

In assessing the effectiveness of the design and operation of a batch distillation system, EPA examines the following parameters: (a) the distillation temperature and pressure and (b) the residence time.

10.5.1 Distillation Temperature and Pressure

Temperature provides an indirect measure of the energy available (i.e., Btu/hr) to vaporize the waste constituents. As the design temperature increases, more constituents with lower volatility will be removed from the waste.

Pressure is integrally related to the boiling point of the waste and the subsequent vaporization of the organic constituents. As the pressure is lowered below atmospheric (i.e., as vacuum is increased), the boiling point of the waste will also be lowered, thereby requiring less heat input to volatilize waste constituents. EPA monitors the distillation temperature as well as the pressure (if pressures other than atmospheric are used) to ensure that the system is operating at the appropriate design conditions and to diagnose operational problems.

10.5.2 Residence Time

The residence time determines the necessary energy input into the system as well as the degree of volatilization of organic constituents. It is dependent on the distillation temperature and the thermal conductivity of the waste. EPA observes the residence time to ensure that sufficient time is provided to effectively volatilize organic constituents from the waste.

10.6 References

DeRenzo, D.J., ed. 1978. Unit operation for treatment of hazardous industrial wastes. Park Ridge, N.J.: Noyes Data Corporation,

Kirk-Othmer. 1965. Encyclopedia of chemical technology. 2nd ed., Vol. 7, pp. 204-248. New York: John Wiley and Sons.

McCabe, W.L., Smith, J.C., and Harriot, P.. 1985. Unit operations of chemical engineering. pp. 533-606. New York: McGraw-Hill Book Co.

Perry, R.H. and Chilton, C.H. 1973. Chemical engineers' handbook, 5th ed., pp. 13-1 to 13-60. New York: McGraw-Hill Book Co.

Rose, L.M. 1985. Distillation design in practice. pp. 1-307. New York: Elsevier.

Van Winkle, M. 1967. Distillation. pp. 1-684. New York: McGraw-Hill Book Co.

Water Chemical Corporation. 1984. Process design manual for stripping of organics. PB84-232628. pp. 1-1 to F4. Prepared for the Industrial Environmental Research Laboratory, Office of Research and Development, U.S. Environmental Protection Agency.

11. CRITICAL FLUID EXTRACTION

11.1 Applicability

Critical fluid extraction is a comparatively new technology. It is applicable to wastes containing a variety of organics that are soluble in pressurized fluids such as carbon dioxide, propane, butane, or pentane. Compounds that have been extracted from wastes by this process include aliphatic hydrocarbons, alkenes, simple aromatic solvents such as benzene and toluene, polynuclear aromatics, and phenols. In theory, this process should also be applicable to a variety of other organic waste constituents. Critical fluid extraction has been demonstrated for treatment of API separator sludges and other hydrocarbon-bearing wastes generated by the petroleum and petrochemicals industries. It may also be applicable to wastes of similar composition generated by other industries such as the organic chemicals industry.

11.2 Underlying Principles of Operation

Critical fluid extraction is a technology that takes advantage of the enhanced solubilities of various organic compounds in hydrocarbons and other solvents in the near critical state (i.e., high pressure). The solvents used are compounds that are usually gases at ambient conditions. The volatile organic solvent is pressurized, which converts it from a gas to a liquid. As a liquid, it leaches (dissolves) the organic constituents out of the complex waste with which it is mixed.

11.3 Description of Critical Fluid Extraction Process

A critical fluid extraction process consists of a blending tank, one or more extraction vessels, one or more decantors, one or more filters, and an evaporation unit. Oil refinery sludges or other organic wastes are first blended together in a blending tank and mixed well to yield a homogeneous, pumpable mixture. This mixture is then pumped to an extraction vessel filled with a liquified gas such as carbon dioxide, propane, butane, or pentane and is mixed under pressure to extract (dissolve) hydrocarbon components from the waste into the liquified gas solvent. After the hydrocarbon components of the waste dissolve in the pressurized liquid, the resulting solution is gravity-separated in a decanter into a wastewater (or waste solids) stream and a solvent-rich stream. The wastewater stream, containing inorganic solids, is sometimes filtered under pressure to remove the insoluble components. The solvent-rich stream is fed to a pressurized evaporation unit. The solvent (carbon dioxide, propane, butane, or pentane) is evaporated by dropping the pressure and is subsequently recovered, repressurized, and recondensed for reuse. The residue from the evaporation, consisting of a liquid hydrocarbon mixture, is then returned to the refinery or other process plant for reprocessing and/or reuse, blended with fuels for heat recovery, or incinerated.

The inorganic residuals (or waste solids) filtered from the waste/solvent mixture are either land disposed (if they contain nontreatable levels of hazardous constituents such as certain metals

(e.g., chromium, lead)) or further treated by processes such as stabilization (and/or incineration if waste solids contain treatable organic levels) prior to land disposal.

11.4 Waste Characteristics Affecting Performance (WCAPs)

In determining whether critical fluid extraction will achieve the same level of performance on an untested waste as on a previously tested waste and whether performance levels can be transferred, EPA examines the following waste characteristics: (a) the concentration of extractable hydrocarbons, (b) the alkalinity of the waste, and (c) the solubility of the waste constituents of concern in the solvent.

11.4.1 Concentration of Extractable Hydrocarbons

The process is designed to extract hydrocarbon components from mixed oily and organic waste liquids and sludges. For this process to be economically applied, the waste should contain at least a few percent by weight of extractable hydrocarbons. The process has been demonstrated on wastes containing from 5 to 34 percent hydrocarbons. For lower concentrations, batch distillation or conventional solvent extraction may be more economical. Also, critical fluid extraction is not economical for wastes containing high concentrations of extractable hydrocarbons (higher than 95 percent). These wastes are more amenable to fractionation treatment. The concentration of extractable hydrocarbons in the waste feed is a measure of the maximum fraction of the waste that can be expected to be extracted in the critical fluid extraction process. A relatively low concentration of extractable hydrocarbons

implies that most of the waste may become wastewater or waste solids (i.e., is nonextractable). Total extractable hydrocarbon content can be estimated by measurement of the total organic carbon (TOC) content. If the TOC of an untested waste is significantly lower than that of the tested waste, the system may not achieve the same performance. More rigorous extraction conditions such as higher temperatures and pressures, additional mixing, and longer settling times may be required to extract less extractable components and achieve the same treatment performance, or other, more applicable treatment technologies may need to be considered for treatment of the untested waste.

11.4.2 Alkalinity of the Waste

When carbon dioxide is used as the extraction fluid, high alkalinity will interfere with the process because carbon dio ide will react to form carbonates and bicarbonates. This will result in xcessive carbon dioxide consumption. For wastes having high alka' nity levels, an extraction fluid other than carbon dioxide should be used. The same problem does not arise if a hydrocarbon fluid (propane, butane, or pentane) is used. If carbon dioxide was the extraction fluid used on a tested waste and the alkalinity of the untested waste is significantly higher than that of the tested waste, the system may not achieve the same performance. Use of another extraction fluid may be required to achieve the same treatment performance, or other, more applicable treatment technologies may need to be considered for treatment of the untested waste.

11.4.3 Solubility of the Waste Constituents of Concern in the Solvent

The constituents in the waste feed that are to be extracted determine the solvent best suited for the extraction process. If the solubility of the waste constituents of concern in the solvent in the untested waste is significantly lower than that in the tested waste, the system may not achieve the same performance. Use of another solvent may be required to increase the solubility of the waste constituents of concern and achieve the same treatment performance, or other, more applicable treatment technologies may need to be considered for treatment of the untested waste.

11.5 Design and Operating Parameters

In assessing the effectiveness of the design and operation of a critical fluid extraction system, EPA examines the following parameters: (a) the extraction pressure, (b) the degree of initial waste mixing, (c) the degree of mixing during extraction, (d) the extraction temperature, (e) the residence time, and (f) the settling time.

11.5.1 Extraction Pressure

Critical fluid extraction systems operate at pressures at which the critical fluids will be liquids at ambient temperatures. Pressure is normally monitored by means of gauges and recorders attached to the extraction vessel. EPA monitors the extraction pressure continuously, if possible, to ensure that the system is operating at the appropriate design condition and to diagnose operational problems.

11.5.2 Degree of Initial Waste Mixing

The waste must be premixed before introduction into the extraction system to ensure a uniform, pumpable blend of material. The waste is normally mixed in tanks or other vessels. Any well-designed and well-operated system should have such waste-blending equipment. The quantifiable degree of mixing is a complex assessment that includes, among other things, the amount of energy supplied, the length of time the material is mixed, and the related turbulence effects of the specific size and shape of the tank or vessel. This is beyond the scope of simple measurement. EPA, however, evaluates the degree of mixing qualitatively by considering whether mixing is provided and whether the type of mixing device is one that could be expected to achieve uniform mixing of the waste.

11.5.3 Degree of Mixing During Extraction

During the fluid extraction, the solvent and waste need to be mixed to ensure maximum contact and, hence, efficiency of extraction. Any well-designed system should include a pressurized extraction vessel that is equipped with an operable mixing system. EPA evaluates this mixing in the same manner as that previously described for initial waste mixing.

11.5.4 Extraction Temperature

The process is normally operated at ambient temperature, although it is possible to use higher temperatures when necessary. In all cases, temperatures used must be below the critical temperature* of the

---

* The critical temperature of a substance is that temperature above which the substance cannot be liquified, no matter how high the operating pressures.

solvent used to ensure that the solvent is present in the extraction vessel in the liquid phase (so that maximum contact with the waste can be achieved). EPA monitors the extraction temperature continuously, if possible, to ensure that the system is operating at the appropriate design condition and to diagnose operational problems.

11.5.5 Residence Time

The residence time in the extraction vessel impacts the extent of extraction of organic contaminants from the waste. It is dependent on the solubility of the waste constituents of concern in the solvent. EPA monitors the waste feed rate to ensure that sufficient residence time is provided to effectively extract the organic contaminants from the waste.

11.5.6 Settling Time

Adequate settling time must be provided to make sure that separation of the phases has been effectively completed. EPA monitors the settling time to ensure effective phase separation.

11.6 References

CF Systems Corporation. 1988. CF Systems Units to Render Refinery Wastes Non-hazardous.

Johnston, K. 1978. Supercritical fluids. In Kirk-Othmer encyclopedia of chemical technology. Supplement Vol. I, pp. 872-893. New York: Wiley-Interscience.

Weast, R.C., ed. 1978. Handbook of chemistry and physics. 58th ed. Cleveland, Ohio: CRC Press.

12. FRACTIONATION

12.1 Applicability

Fractionation is a form of distillation applicable to wastes containing organics that are volatile enough to be separated from other components by the application of heat. It differs from other forms of distillation, such as batch distillation, steam stripping, and thin film evaporation, in that it is designed to achieve the highest degree of distillate purity of the separated components. Fractionation can be operated to produce multiple product streams for recovery of more than one organic constituent from a waste while generating minimal amounts of residue to be land disposed. In general, this technology is used where recovery of multiple constituents is desired and where the waste contains minimal amounts of suspended solids.

12.2 Underlying Principles of Operation

As with other forms of distillation, the basic principle of operation for fractionation is the volatilization of the more volatile constituents from the less volatile constituents through the application of heat. The constituents that are volatilized are then condensed and typically reused. Constituents that are not volatilized may also be reused or incinerated as applicable.

An integral part of the theory of fractionation is the principle of vapor-liquid equilibrium. When a liquid mixture of two or more components is heated, the vapor phase present above the liquid phase becomes more concentrated in the more volatile constituents (those having

the higher vapor pressures). The vapor phase above the liquid phase is then cooled to yield a condensate that is also more concentrated in the more volatile components. The remaining liquid phase is richer in the less volatile components. The degree of separation of components depends on the relative differences in the vapor pressures of the constituents; the larger the difference in the vapor pressures, the more easily the separation can be accomplished.

If the difference between the vapor pressures is extremely large, a single separation cycle or a single equilibrium stage of vaporization and condensation may achieve a significant separation of the constituents. (Typically, batch distillation or thin film evaporation would be used in such a case). If the difference between the vapor pressures is small, then multiple equilibrium stages are needed to achieve effective separation. In practice, the multiple equilibrium stages are obtained by stacking trays or placing packing into a column. Essentially, each tray represents one equilibrium stage. In a packed fractionation column, the individual equilibrium stages are not discernible, but the number of equivalent trays can be calculated from mathematical relationships using the height of the packing. The vapor phase from a tray rises to the tray above it, where it condenses; the liquid phase falls to the tray below it, where it is again heated and separated. Fractionation processes use multiple equilibrium stages, with the initial waste feed entering at a point between the first and last equilibrium stages.

The stages at and below the point of entry are called the stripping section. These stages sequentially "strip" the volatile components from

the liquid feed (i.e., reduce the quantities of more volatile constituents). The stages located above the point of feed are called the rectification section. These stages allow the vapor rising from the stripping section to become further enriched in the more volatile components. The vapor leaving the top of the fractionating column is condensed, and a portion of this condensed liquid is returned to the uppermost stage to aid in rectification. This step of returning a portion of the condensed liquid to the column is called reflux. The remaining condensed liquid is collected in a product receiver and reused.

The vapor-liquid equilibrium of the waste components can be expressed as relative volatility, which is the ratio of the vapor-to-liquid concentrations of a constituent divided by the vapor-to-liquid concentrations of another constituent. The relative volatility is a direct indicator of the ease of separation. If the numerical value is 1, then separation is impossible because the constituents have the same concentrations in the vapor and liquid phases. When the relative volatility is 1, the liquid mixture is called an azeotrope. Separation becomes easier as the value of the relative volatility becomes increasingly different from unity.

12.3 Description of Fractionation Process

A fractionation unit consists of a reboiler, a column containing stripping and rectification sections, a condenser, and a reflux system. Figure 12-1 is a schematic showing the major components of a fractionation unit. The reboiler is a device that provides the heat

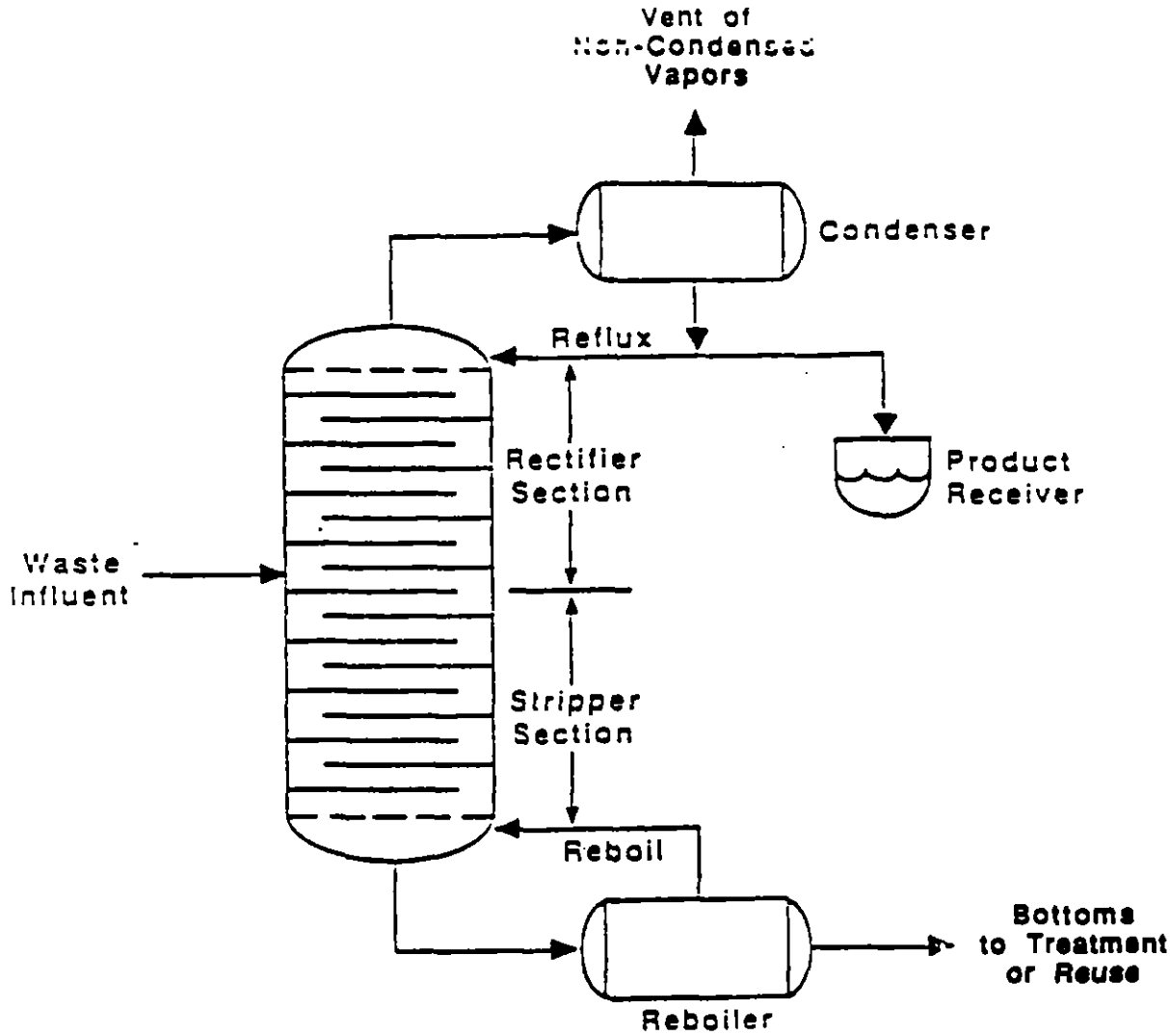

FIGURE 12-1
FRACTIONATION UNIT

required to vaporize the liquid fraction of the waste. It supplies enough heat to maintain the liquid in the column at its boiling point. The stripping and rectifying sections are composed of a set of trays in a vertical column. The discrete trays may be replaced by loose packing consisting of plastic, metal, or ceramic geometric shapes that provide surface area for the continuous boiling/condensing that takes place in the column. In the stripping section, vapor rising from the boiler is contacted with the downflowing liquid feed. Through this contact, the constituents with lower boiling points (i.e., those that are more volatile) are concentrated in the vapor. In the rectification section, the vapor rising above the feed tray is contacted with downflowing condensed liquid product (reflux). Through this contact, further enrichment of the vapor in the constituents with lower boiling points (i.e., the more volatile constituents) is achieved The rising vapor is collected at the top of the column and condensed i a condenser. The liquid product stream, except for the portion returned to the column as reflux, is then routed to a product receiver. The "bottoms," which are the least volatile components (i.e., those with the highest boiling points), are continuously withdrawn from the reboiler.

Because the liquid composition varies slightly from one equilibrium stage to the next, it is also possible to withdraw streams of differing quality (sometimes called "fractions") from different locations throughout the column. This is typically done in refining petroleum, resulting in different grades or "cuts" of petroleum products.

12.4 Waste Characteristics Affecting Performance (WCAPs)

In determining whether fractionation will achieve the same level of performance on an untested waste as on a previously tested waste and whether performance levels can be transferred, EPA examines the following waste characteristics: (a) the component boiling points, (b) the concentration of suspended solids, (c) the concentration of volatile components, (d) the surface tension, and (e) the concentration of oil and grease.

12.4.1 Component Boiling Points

As noted earlier, the greater the ratio of volatility of the waste constituents, the more easily the separation of these constituents can proceed. This ratio is called relative volatility. EPA recognizes, however, that relative volatilities cannot be measured or calculated directly for the complex types of wastes generally treated by fractionation. This is because the wastes usually consist of a myriad of components, all with different vapor pressure-versus-temperature relationships. Determining relative volatilities is further complicated by the fact that the relative volatility changes as the temperature conditions change throughout the fractionation column (the column is cooler at the top than at the bottom). However, because the volatility of components is usually inversely proportional to their boiling points (i.e., the higher the boiling point, the lower the volatility), EPA uses the boiling point of waste components as a surrogate waste characteristic

for relative volatility. If the differences in boiling points between the more volatile and less volatile constituents are lower in the untested waste than in the tested waste, the system may not achieve the same performance and other, more applicable treatment technologies may need to be considered for treatment of the untested waste.

12.4.2 Concentration of Suspended Solids

Wastes containing large amounts of suspended solids, organic or inorganic, may clog column internals and coat heat transfer surfaces, thereby inhibiting mass transfer of constituents between the vapor and liquid phases. If the concentration of suspended solids in the untested waste is significantly higher than that in the tested waste, the system may not achieve the same performance. Filtration may be required prior to fractionation to reduce the concentration of suspended solids and achieve the same treatment performance, or other, more applicable technologies may need to be considered for treatment of the untested waste.

12.4.3 Concentration of Volatile Components

The concentration of volatile components is a measure of the maximum fraction of the waste that can be expected to volatilize in the fractionation column. A relatively low concentration of volatile components implies that most of the waste may become bottoms (i.e., is nonvolatile). If the concentration of volatile components in the untested waste is significantly lower than that in the tested waste, the

system may not achieve the same performance. Higher temperatures, lower pressures, and/or an increase in the number of separation stages may be required to volatilize less volatile components and achieve the same treatment performance, or other, more applicable treatment technologies may need to be considered for treatment of the untested waste.

12.4.4 Surface Tension

The surface tension of the waste is a measure of the tendency of the waste to foam. The higher the surface tension of the liquid, the higher its tendency to foam. The likelihood of foaming requires special column design or the incorporation of defoaming compounds. Packed columns are usually less susceptible to foaming than tray columns. If the surface tension of the untested waste is significantly higher than that of the tested waste, the system may not achieve the same performance. Defoaming compounds and/or the use of a packed column may be required to reduce foaming and achieve the same treatment performance, or other, more applicable treatment technologies may need to be considered for treatment of the untested waste.

12.4.5 Concentration of Oil and Grease

High concentrations of oil and grease may clog fractionation equipment. Consequently, special designs may be required to accommodate oil and grease. If the concentration of oil and grease in the untested waste is significantly higher than that in the tested waste, the system may not achieve the same performance and other, more applicable treatment

technologies may need to be considered for treatment of the untested waste.

12.5 Design and Operating Parameters

In assessing the effectiveness of the design and operation of a fractionation system, EPA examines the following parameters: (a) the number of separation stages, (b) the liquid and vapor flow rates, (c) the fractionation temperature and pressure, (d) the differential pressure, and (e) the internal column design.

12.5.1 Number of Separation Stages

The number of theoretical stages in the fractionation column required to achieve the desired separation of more volatile components from less volatile components is calculated from vapor-liquid equilibrium data, which are determined empirically. Using the theoretical number of stages, the actual number of stages can then be determined through the use of empirical tray efficiency data typically supplied by an equipment manufacturer. EPA examines the actual number of stages in the fractionation column to ensure that the system is designed to achieve an effective degree of separation of more volatile components from less volatile components.

12.5.2 Liquid and Vapor Flow Rates

The vapor-liquid equilibrium data are also used to determine the liquid and vapor flow rates that provide sufficient contact between the liquid and vapor streams. These rates are, in turn, affected by the

column diameter. EPA monitors the liquid and vapor flow rates to ensure that sufficient contact time between the liquid and vapor streams is provided to effectively separate the more volatile components from less volatile components.

12.5.3 Fractionation Temperature and Pressure

These parameters are integrally related to the vapor-liquid equilibrium conditions. The temperature at any point in the column is an indicator of the constituent concentrations at that point, thus revealing whether the separation of components is taking place as expected. Overall column pressure influences the boiling point of the liquid at any location in the column. For example, through application of a partial vacuum to the column, the temperatures required to achieve the desired separation can be reduced because liquids volatilize at lower temperatures at reduced pressures. EPA monitors the temperature and pressure in a fractionation column continuously, if possible, to ensure that the system is operating at the appropriate design conditions and to diagnose operational problems.

12.5.4 Differential Pressure

Measuring the differential pressure between the top and bottom of the column indicates whether the flow rate of either the liquid or the vapor phase is excessive. For instance, a high pressure drop across the column may indicate a condition of "flooding," in which the liquid phase cannot flow down through the column as fast as feed is entering, causing backing

up or "flooding" to occur. EPA monitors the pressure drop across the fractionation column continuously, if possible, to ensure that the system is operating at the appropriate design condition and to diagnose operational problems.

12.5.5 Internal Column Design

Column internals are designed to accommodate the physical and chemical properties of the waste to be fractionated. Two types of internals may be used in fractionation: trays and packing. Tray types include bubble cap, sieve, valve, and turbo-grid. Trays have several advantages over packing. They are less susceptible to blockage by solids, they have a lower capital cost for large-diameter columns (greater than approximately 3 feet), and they accommodate a wider range of liquid and vapor flow rates. Compared to trays. packing has the advantages of having a lower pressure drop per the etical stage, being more resistant to corrosive materials, having a lo-er capital cost for small-diameter columns (less than approximately 3 feet), and being less susceptible to foaming because of a more uniform flow distribution (i.e., lower local variations in flow rates). EPA examines the internal column design of a fractionation column to ensure that the system is designed to handle potential operational problems (e.g., corrosion, foaming, channeling, etc.).

12.6 References

DeRenzo, D.J., ed. 1978. Unit operation for treatment of hazardous industrial wastes. Park Ridge, N.J.: Noyes Data Corporation,

Kirk-Othmer. 1965. Encyclopedia of chemical technology. 2nd ed., Vol. 7, pp. 204-248. New York: John Wiley and Sons.

McCabe, W.L., Smith, J.C., and Harriot, P.. 1985. Unit operations of chemical engineering. pp. 533-606. New York: McGraw-Hill Book Co.

Perry, R.H. and Chilton, C.H. 1973. Chemical engineers' handbook, 5th ed., pp. 13-1 to 13-60. New York: McGraw-Hill Book Co.

Rose, L.M. 1985. Distillation design in practice. pp. 1-307. New York: Elsevier.

Van Winkle, M. 1967. Distillation. pp. 1-684. New York: McGraw-Hill Book Co.

Water Chemical Corporation. 1984. Process design manual for stripping of organics. PB84-232628. pp. 1-1 to F4. Prepared for the Industrial Environmental Research Laboratory, Office of Research and Development, U.S. Environmental Protection Agency.

13. FUEL SUBSTITUTION

Fuel substitution involves using hazardous waste as a fuel in industrial furnaces or in boilers for generation of steam. The hazardous waste may be blended with other nonhazardous wastes (e.g., municipal sludge) and/or fossil fuels.

13.1 Applicability

Fuel substitution has been used with industrial waste solvents, refinery wastes, synthetic fibers/petrochemical wastes, and waste oils. It can also be used when combusting other waste types produced during the manufacture of pharmaceuticals, pulp and paper, and pesticides. These wastes can be handled in a solid, liquid, or gaseous form.

The most common types of units in which waste fuels are burned are industrial furnaces and industrial boilers. Industrial furnaces include a variety of industrial processes that produce hea and/or products by burning fuels. They include blast furnaces, smelt rs, and coke ovens. Industrial boilers are units wherein fuel is used to produce steam for process and plant use. Industrial boilers typically use coal, oil, or gas as the primary fuel source.

The parameters that affect the selection of fuel substitution are:

- Halogen content of the waste;
- Inorganic solids content (ash content) of the waste, particularly heavy metals;
- Heating value of the waste;
- Viscosity of the waste (for liquids);

- Filterable solids concentration (for liquids); and
- Sulfur content.

13.1.1 Halogen Content of the Waste

If halogenated organics are burned, halogenated acids and free halogen are among the products of combustion. These released corrosive gases may require subsequent treatment prior to venting to the atmosphere. Also, halogens and halogenated acids formed during combustion are likely to severely corrode boiler tubes and other process equipment. To minimize such problems, halogenated wastes are blended into fuels only at very low concentrations. High chlorine content can also lead to the incidental production (at very low concentrations) of other hazardous compounds such as polychlorinated biphenyls (PCBs), chlorinated *dibenzo-p-dioxins* (CDDs), chlorinated dibenzofurans (CDFs), and chlorinated phenols.

13.1.2 Inorganic Solids Content of the Waste

High inorganic solids content (i.e., ash content) of wastes may cause two problems: (1) scaling in the boiler and (2) particulate air emissions. Scaling results from deposition of inorganic solids on the walls of the boiler. Particulate emissions are produced by noncombustible inorganic constituents that flow out of the boiler with the gaseous combustion products. Because of these problems, wastes with significant concentrations of inorganic materials are not usually handled in boilers unless they have an air pollution control system.

Industrial furnaces vary in their tolerance to inorganic constituents. Heavy metal concentrations, found in both halogenated and nonhalogenated wastes used as fuel, can cause environmental concern because they may be emitted in the gaseous emissions from the combustion process, in the ash residues, or in any produced solids. The partitioning of the heavy metals to these residual streams primarily depends on the volatility of the metal, waste matrix, and furnace design.

13.1.3 Heating Value of the Waste

The heating value of the waste must be high enough (either alone or in combination with other fuels) to maintain combustion temperatures consistent with efficient waste destruction and operation of the boiler or furnace. For many applications, only supplemental fuels having minimum heating values of 4,400 to 5,600 kcal/kg (8,000 to 10,000 Btu/lb) are considered to be feasible. Below this value, the unblended fuel would not be likely to maintain a stable flame, and its combustion would release insufficient energy to provide needed steam generation potential in the boiler or the necessary heat for an industrial furnace. Some wastes with heating values of less than 4,400 kcal/kg (8,000 Btu/lb) can be used if sufficient auxiliary fuel is employed to support combustion or if special designs are incorporated into the combustion device. Occasionally, for wastes with heating values higher than virgin fuels, blending with auxiliary fuel may be required to prevent overheating or overcharging of the combustion device.

13.1.4 Viscosity of the Waste

In combustion devices designed to burn liquid fuels, the viscosity of the liquid waste must be low enough that it can be atomized in the combustion chamber. If the viscosity is too high, heating the storage tanks may be required prior to combustion. For atomization of liquids, a viscosity of 165 centistokes (750 Saybolt Seconds Universal (SSU)) or less is typically required.

13.1.5 Filterable Solids Concentration

If filterable material suspended in the liquid fuel prevents or hinders pumping or atomization, it will be unacceptable.

13.1.6 Sulfur Content

A waste's sulfur content may affect whether it can be burned or not, because the waste may emit sulfur oxide into the atmosphere. For instance the EPA has proposed sulfur oxide emissio regulations for certain new source industrial boilers (51 FR 22385 . Air pollution control devices are available to remove sulfur oxides from the stack gases.

13.2 Underlying Principles of Operation

For a boiler and most industrial furnaces there are two distinct principles of operation. Initially, energy in the form of heat is transferred to the waste to achieve volatilization of the various waste constituents. For liquids, volatilization energy may also be supplied by using pressurized atomization. The energy used to pressurize the liquid

waste allows the atomized waste to break into smaller particles, thus enhancing its rate of volatilization. The volatilized constituents then require additional energy to destabilize the chemical bonds, allowing the constituents to react with oxygen to form carbon dioxide and water vapor. The energy needed to destabilize the chemical bonds is referred to as the energy of activation.

13.3 Description of Fuel Substitution Process

Since a number of industrial applications can use fuel substitution, there is no one process description that will fit all of these applications. The following section, however, provides a general description of industrial kilns (one form of industrial furnace) and industrial boilers.

13.3.1 Kilns

Combustible wastes have the potential to be used as fuel in kilns and, for waste liquids, are often used with oil to co-fire kilns. Coal-fired kilns are capable of handling some solid wastes. In the case of cement kilns, there are usually no residuals requiring land disposal, since any ash formed becomes part of the product or is removed by particulate collection systems and recycled back to the kiln. The only residuals may be low levels of unburned gases that escape with combustion products. If this is the case, air pollution control devices may be required.

Three types of kilns are particularly applicable: cement kilns, lime kilns, and lightweight aggregate kilns.

(1) Cement kilns. The cement kiln is a rotary furnace, which is a refractory-lined steel shell used to calcine a mixture of calcium, silicon, aluminum, iron, and magnesium-containing minerals. The kiln is normally fired by coal or oil. Liquid and solid combustible wastes may then serve as auxiliary fuel. Temperatures within the kiln are typically between 1,380 and 1,540°C (2,500 to 2,800°F). To date, only liquid hazardous wastes have been burned in cement kilns.

Most cement kilns have a dry particulate collection device (i.e., either an electrostatic precipitator or a baghouse), with the fly ash collected recycled back to the kiln. Buildup of metals or other noncombustibles is prevented through their incorporation into the product cement. Many types of cement require a source of chloride so that most halogenated liquid hazardous wastes currently can e burned in cement kilns. Available information shows that scrubbers are not used.

(2) Lime kilns. Quick-lime (CaO) is manufactured in a calcination process using limestone ($CaCO_3$) or dolomite ($CaCO_3$ and $MgCO_3$). These raw materials are also heated in a refractory-lined rotary kiln, typically to temperatures of 980 to 1,260°C (1,800 to 2,300°F). Lime kilns are less likely to burn hazardous wastes than are cement kilns because product lime is often added to potable water systems. Only one lime kiln in the United States currently burns hazardous waste. That particular facility sells its product lime for use as flux or as refractory in blast furnaces.

As with cement kilns, any fly ash collected is recycled back to the lime kiln; thus, no residual streams are produced by the kiln. Available information shows that scrubbers are not used.

(3) Lightweight aggregate kilns. Lightweight aggregate kilns heat clay to produce an expanded lightweight inorganic material used in portland cement formulations and other applications. The kiln has a normal temperature range of 1,100 to 1,150°C (2,000 to 2,100°F). Lightweight aggregate kilns are less amenable to combustion of hazardous wastes as fuels than are the other kilns described above because these kilns lack material to adsorb halogens. As a result, burning of halogenated organics in these kilns would likely require afterburners to ensure complete destruction of the halogenated organics and scrubbers to control acid gas production. Such controls would produce a wastewater residual stream subject to treatment standards.

13.3.2 Industrial Boilers

A boiler is a closed vessel in which water is transformed into steam by the application of heat. Normally, heat is supplied by the combustion of pulverized coal, fuel oil, or gas. These fuels are fired into a combustion chamber with nozzles and burners that provide mixing with air. Liquid wastes, and granulated solid wastes in the case of grate-fired boilers, can be burned as auxiliary fuel in a boiler. Few grate-fired boilers burn hazardous wastes, however. For liquid-fired boilers, residuals requiring land disposal are generated only when the

boiler is shut down and cleaned. This is generally done once or twice per year. Other residuals from liquid-fired boilers would be the gas emission stream, which would consist of any products of incomplete combustion, along with the normal combustion products. For example, chlorinated wastes would produce acid gases. If this is the case, air pollution control devices may be required. For solid-fired boilers, an ash normally is generated. This ash may contain residual amounts of organics from the blended waste/fuels, as well as noncombustible materials. Land disposal of this ash would require compliance with applicable BDAT treatment standards.

13.4 Waste Characteristics Affecting Performance (WCAPs)

For cement kilns, lime kilns, and lightweight aggregate kilns burning nonhalogenated wastes (i.e., no scrubber is needed to control acid gases), no residual waste streams would be produce . Any noncombustible material in the waste would leave the kiln in the roduct stream. As a result, in transferring standards EPA would not examine waste characteristics affecting performance but rather would determine the applicability of fuel substitution; that is, EPA would investigate the parameters affecting treatment selection. For kilns, these parameters (as mentioned previously) are Btu content, percent filterable solids, halogenated organics content, viscosity, and sulfur content.

Lightweight aggregate kilns burning halogenated organics and boilers burning wastes containing any noncombustibles will produce residual

streams subject to treatment standards. In determining whether fuel substitution is likely to achieve the same level of performance on an untreated waste as on a previously treated waste, EPA will examine: (1) relative volatility of the waste constituents, (2) the heat transfer characteristics (for solids), and (3) the activation energy for combustion.

13.4.1 Relative Volatility

The term relative volatility (α) refers to the ease with which a substance present in a solid or liquid waste will vaporize from that waste upon application of heat from an external source. Hence, it bears a relationship to the equilibrium vapor pressure of the substance.

EPA recognizes that the relative volatilities cannot be measured or calculated directly for the types of wastes generally treated in an industrial boiler or furnace. The Agency believes that the best measure of relative volatility is the boiling point of the various hazardous constituents and will, therefore, use this parameter in assessing volatility of the organic constituents.

13.4.2 Heat Transfer Characteristics

Consistent with the underlying principles of combustion in aggregate kilns or boilers, a major factor with regard to whether a particular constituent will volatilize is the transfer of heat through the waste. In the case of industrial boilers burning solid fuels, heat is transferred through the waste by three mechanisms: radiation,

convection, and conduction. For a given boiler, it can be assumed that the type of waste will have a minimal impact on the heat transferred from radiation. With regard to convection, EPA believes that the range of wastes treated would exhibit similar properties with regard to the amount of heat transferred by convection. Therefore, EPA will not evaluate the radiation convection heat transfer properties of wastes in determining similar treatability. For solids, the third heat transfer mechanism, conductivity, is the one principally operative or most likely to change between wastes.

Using thermal conductivity measurements as part of a treatability comparison for two different wastes through a given boiler or furnace is most meaningful when applied to wastes that are homogeneous. As wastes exhibit greater degrees of nonhomogeneity, thermal conductivity becomes less accurate in predicting treatability because the measurement essentially reflects heat flow through regions having the greatest conductivity (i.e., the path of least resistance) and not heat flow through all parts of the waste. Nevertheless, EPA has not identified a better alternative to thermal conductivity, even for wastes that are nonhomogeneous.

Other parameters considered for predicting heat transfer characteristics were Btu value, specific heat, and ash content. These parameters can neither better account for nonhomogeneity nor better predict heat transferability through the waste.

13.4.3 Activation Energy

Given an excess of oxygen, an organic waste in an industrial furnace or boiler would be expected to convert to CO_2 and H_2O provided that the activation energy is achieved. Activation energy is the quantity of heat (energy) needed to destabilize molecular bonds and create reactive intermediates so that the oxidation (combustion) reaction will proceed to completion. As a measure of activation energy, EPA is using bond dissociation energies. In theory, the bond dissociation energy would be equal to the activation energy; in practice, however, this is not always the case.

In some instances, bond energies will not be available and will have to be estimated, or other energy effects (e.g., vibrational) and other reactions will have a significant influence on activation energy. Because of the shortcomings of bond energies in estimating activation energy, EPA analyzed other waste characteristic parameters to determine whether these parameters would provide a better basis for transferring treatment standards from an untested waste to a tested waste. These parameters included heat of combustion, heat of formation, use of available kinetic data to predict activation energies, and general structural class. All of these parameters were rejected for the reasons provided below.

The heat of combustion measures only the difference in energy of the products and reactants; it does not provide information on the transition

state (i.e., the energy input needed to initiate the reaction). Heat of formation is used as a tool to predict whether reactions are likely to proceed; however, there are a significant number of hazardous constituents for which these data are not available. The use of available kinetic data was rejected because these data are limited and could not be used to calculate dissociation requirements for the wide range of hazardous constituents. Finally, EPA decided not to use structural classes because the Agency believes that evaluation of bond dissociation energies allows for a more direct determination of whether a constituent will be destabilized.

13.5 Design and Operating Parameters

13.5.1 Design Parameters

Cement kilns, lime kilns, and aggregate kilns burning nonhalogenated wastes produce no residual streams. Their design and operation is such that any wastes that are incompletely destroyed will be contained in the product. As a result, the Agency will not look at design and operating values for such devices since treatment, per se, cannot be measured through detection of constituents in residual streams. In this instance, it is important merely to ensure that the waste is appropriate for combustion in the kilns and that the kiln is operated in a manner that will produce a usable product.

Specifically, cement, lime, and aggregate kilns are demonstrated only on liquid hazardous wastes. Such wastes must be sufficiently free of filterable solids to avoid plugging the burners at the hot end of the

kiln. Viscosity also must be low enough to inject the waste into the kiln through the burners. The sulfur content is not a concern unless the concentration in the waste results in exceeding Federal, State, or local air pollution standards promulgated for industrial boilers.

The design parameters that normally affect the operation of an industrial boiler (and aggregate kilns with residual streams) with respect to hazardous waste treatment are (1) the design temperature, (2) the design retention time of the waste in the combustion chamber, and (3) turbulence in the combustion chamber. Evaluation of these parameters would be important in determining whether an industrial boiler or industrial furnace is adequately designed for effective treatment of hazardous wastes. The rationale for selection of these three parameters is given below.

(1) Design temperature. Industrial boilers are generally designed based on their steam generation potential (Btu output). This factor is related to the design combustion temperature, which, in turn, depends on the amount of fuel burned and its Btu value. The fuel feed rates and combustion temperatures of industrial boilers are generally fixed based on the Btu values of fuels normally handled (e.g.. No. 2 versus No. 6 fuel oils). When wastes are to be blended with fossil fuels for combustion, the blending, based on Btu values, must be such that the resulting Btu value of the mixture is close to that of the fuel value used in the design of the boiler. Industrial furnaces also are designed

to operate at specific ranges of temperature in order to produce the desired product (e.g., lightweight aggregate). The blended waste/fuel mixture should be capable of maintaining the design temperature range.

(2) Retention time. A sufficient retention time of combustion products is normally necessary to ensure that the hazardous substances being combusted (or formed during combustion) are completely oxidized. Retention times on the order of a few seconds are generally needed at normal operating conditions. For industrial furnaces as well as boilers, the retention time is a function of the size of the furnace and the fuel feed rates. For most boilers and furnaces the retention time usually exceeds a few seconds.

(3) Turbulence. Boilers are designed so that fuel and air are intimately mixed. This helps to ensure that complete combustion takes place. The shape of the boiler and the method of fuel and air feed influence the turbulence required for good mixing. Industrial furnaces also are designed for turbulent mixing where fuel and air are mixed.

13.5.2 Operating Parameters

The operating parameters that normally affect the performance of an industrial boiler and many industrial furnaces with respect to treatment of hazardous wastes are (1) air flow rate, (2) fuel feed rate, (3) steam pressure or rate of production, and (4) temperature. EPA believes that these four parameters will be used to determine whether an industrial boiler burning blended fuels containing hazardous waste constituents is

operated properly. The rationale for selection of these four operating parameters is given below. Most industrial furnaces will monitor similar parameters, but some exceptions are noted below.

(1) Air feed rate. An important operating parameter in boilers and many industrial furnaces is the oxygen content in the flue gas, which is a function of the air feed rate. Stable combustion of a fuel generally occurs within a specific range of air-to-fuel ratios. An oxygen analyzer in the combustion gases can be used to control the feed ratio of air to fuel to ensure complete thermal destruction of the waste and efficient operation of the boiler. When necessary, the air flow rate can be increased or decreased to maintain proper fuel-to-oxygen ratios. Some industrial furnaces do not completely combust fuels (e.g., coke ovens and blast furnaces); hence, oxygen concentration in the flue gas is a meaningless variable.

(2) Fuel feed rate. The rate at which fuel is injected into the boiler or industrial furnace will determine the thermal output of the system per unit of time (Btu/hr). If steam is produced, steam pressure monitoring will indirectly determine whether the fuel feed rate is adequate. However, various velocity and mass measurement devices can be used to monitor fuel flow directly.

(3) Steam pressure or rate of production. Steam pressure in boilers provides a direct measure of the thermal output of the system and is directly monitored by use of in-system pressure gauges. Increases or

decreases in steam pressure can be effected by increasing or decreasing the fuel and air feed rates within certain operating design limits. Most industrial furnaces do not produce steam; instead they produce a product (e.g., cement, aggregate) and monitor the rate of production.

(4) Temperature. Temperatures are monitored and controlled in industrial boilers to ensure the quality and flow rate of the steam. Therefore, complex monitoring systems are frequently installed in the combustion unit to provide a direct reading of temperature. The efficiency of combustion in industrial boilers is dependent on combustion temperatures. Temperature may be adjusted to design settings by increasing or decreasing air and fuel feed rate.

Wastes should not be added to primary fuels until the boiler temperature reaches the minimum needed for destruction of the wastes. Temperature instrumentation and control should be designed to stop adding waste in the event of process upsets.

Monitoring and control of temperature in industrial furnaces (e.g., lime, cement, or aggregate kilns) that require minimum operating temperatures are also critical to the product quality. Kilns have very high thermal inertia in the refractory and in-process product, high residence times, and high air flow rates, so that even in the case of a momentary stoppage of fuel flow to the kiln, organic constituents are likely to continue to be destroyed. The main operational control required for wastes burned in kilns is to stop waste flow in the event of

low kiln temperature, loss of electrical power to the combustion air fan, and loss of primary fuel flow.

13.5.3 Other Operating Parameters

In addition to the four operating parameters discussed above, EPA considered and then discarded one additional parameter fuel-to-waste blending ratios. However, while blending is done to yield a uniform Btu content fuel, blending ratios will vary significantly depending on the Btu content of the wastes and the fuels being used.

13.6 References

Castaldini C., et al. 1986. Disposal of hazardous wastes in industrial boilers or furnaces, Park Ridge, New Jersey: Noyes Publications.

Bonner, T. A. et al. 1981. Engineering handbook for hazardous waste incineration. PB 81-248163. Prepared by Monsanto Research Corporation for U.S. EPA. June 1981.

Versar. 1984. Estimating PMN incineration results. EPA Contract no. 68-01-6271, Task no. 66. Draft report for Exposure Evaluation Division, Office of Toxic Substances. Washington, D.C.: U.S. Environmental Protection Agency.

14. INCINERATION

This section addresses the commonly used incineration technologies: liquid injection, rotary kiln, fluidized bed, and fixed hearth. As appropriate, the subsections are divided by type of incineration unit.

14.1 Applicability

14.1.1 Liquid Injection

Liquid injection is applicable to wastes that have viscosity values low enough that the waste can be atomized in the combustion chamber. A range of literature maximum viscosity values are reported, with the low being 100 Saybolt Seconds Universal (SSU) and the high being 10,000 SSU. It is important to note that viscosity is temperature dependent so that while liquid injection may not be applicable to a waste at ambient conditions, it may be applicable when the waste is heated. Other factors that affect the use of liquid injection are particle size and the presence of suspended solids. Both of these can cause plugging of the burner nozzle.

14.1.2 Rotary Kiln/Fluidized Bed/Fixed Hearth

These incineration technologies are applicable to a wide range of hazardous wastes. They can be used on wastes that contain high or low total organic content, high or low filterable solids, various viscosity ranges, and a range of other waste parameters. EPA has not found these technologies to be demonstrated on most wastes that are composed essentially of metals with low organic concentrations. In addition, the Agency expects that the incineration of some of the high metal content

wastes may not be compatible with existing and future air emission limits without emission controls far more extensive than those currently in use.

14.2 Underlying Principles of Operation

14.2.1 Liquid Injection

The basic operating principle of this incineration technology is that incoming liquid wastes are volatilized and then additional heat is supplied to the waste to destabilize the chemical bonds. Once the chemical bonds are broken, these constituents react with oxygen to form carbon dioxide and water vapor. The energy needed to destabilize the bonds is referred to as the energy of activation.

14.2.2 Rotary Kiln and Fixed Hearth

There are two distinct principles of operation for these incineration technologies, one for each of the two chambers involved. In the primary chamber, energy, in the form of heat, is transferred to the waste to achieve volatilization of the various organic waste constituents. During this volatilization process some of the organic constituent bonds destabilize and oxidize to carbon dioxide and water vapor. In the secondary chamber, additional heat is supplied to overcome the energy requirements needed to destabilize the remaining chemical bonds and allow the constituents to react with excess oxygen to form carbon dioxide and water vapor. The principle of operation for the secondary chamber is similar to that of liquid injection.

14.2.3 Fluidized Bed

The principle of operation for this incinerator technology is somewhat different from that for rotary kiln and fixed hearth

incineration, in that there is only one chamber, which contains the fluidizing sand and a freeboard section above the sand. The purpose of the fluidized bed is to both volatilize the waste and combust the waste. Destruction of the waste organics can be accomplished to a better degree in this chamber than in the primary chamber of the rotary kiln and fixed hearth because of (a) improved heat transfer from fluidization of the waste using forced air and (b)the fact that the fluidization process provides sufficient oxygen and turbulence to convert the organics to carbon dioxide and water vapor. The freeboard volume generally does not have an afterburner; however, additional time is provided for conversion of the organic constituents to carbon dioxide and water vapor (and hydrochloric acid if chlorine is present in the waste).

14.3 Description of Incineration Technologies

14.3.1 Liquid Injection

The liquid injection system is capable of incinerating a wide range of gases and liquids. The combustion system has a simple design with virtually no moving parts. A burner or nozzle atomizes the liquid waste and injects it into the combustion chamber, where it burns in the presence of air or oxygen. A forced draft system supplies the combustion chamber with air to provide oxygen for combustion and turbulence for mixing. The combustion chamber is usually a cylinder lined with refractory (i.e., heat-resistant) brick, and it can be fired horizontally, vertically upward, or vertically downward. Figure 14-1 illustrates a liquid injection incineration system.

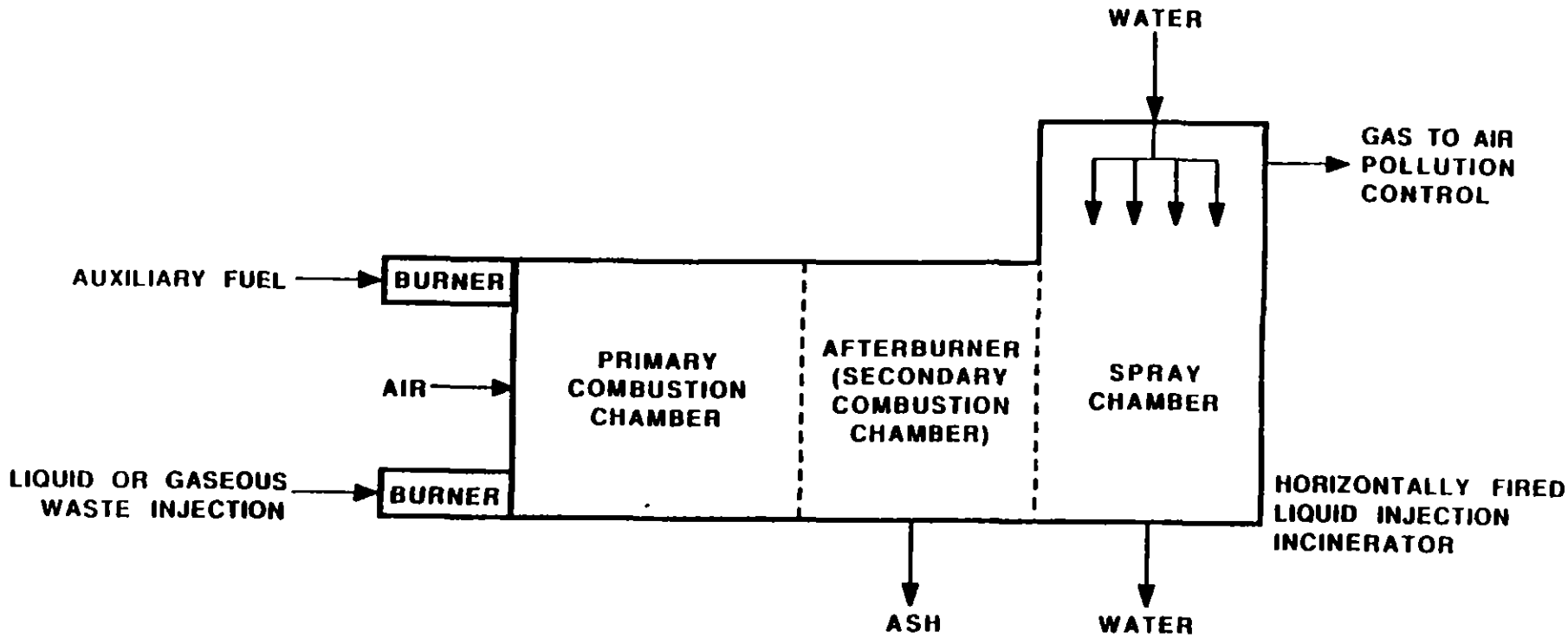

FIGURE 14-1
LIQUID INJECTION INCINERATOR

14.3.2 Rotary Kiln

A rotary kiln is a slowly rotating, refractory-lined cylinder that is mounted at a slight incline from the horizontal (see Figure 14-2). Solid wastes enter at the high end of the kiln, and liquid or gaseous wastes enter through atomizing nozzles in the kiln or afterburner section. Rotation of the kiln exposes the solids to the heat, vaporizes them, and allows them to combust by mixing with air. The rotation also causes the ash to move to the lower end of the kiln, where it can be removed. Rotary kiln systems usually have a secondary combustion chamber or afterburner following the kiln for further combustion of the volatilized components of solid wastes.

14.3.3 Fluidized Bed

A fluidized bed incinerator consists of a column containing inert particles such as sand, which is referred to as the bed. Air, driven by a blower, enters the bottom of the bed to fluidize the sand. Air passage through the bed promotes rapid and uniform mixing of the injected waste material within the fluidized bed. The fluidized bed has an extremely high heat capacity (approximately three times that of flue gas at the same temperature), thereby providing a large heat reservoir. The injected waste reaches ignition temperature quickly in the hot fluidized bed. Continued bed agitation by the fluidizing air allows larger particles to remain suspended in the combustion zone. (See Figure 14-3)

14.3.4 Fixed Hearth

Fixed hearth incinerators, versions of which are also called controlled air or starved air incinerators, are another major technology

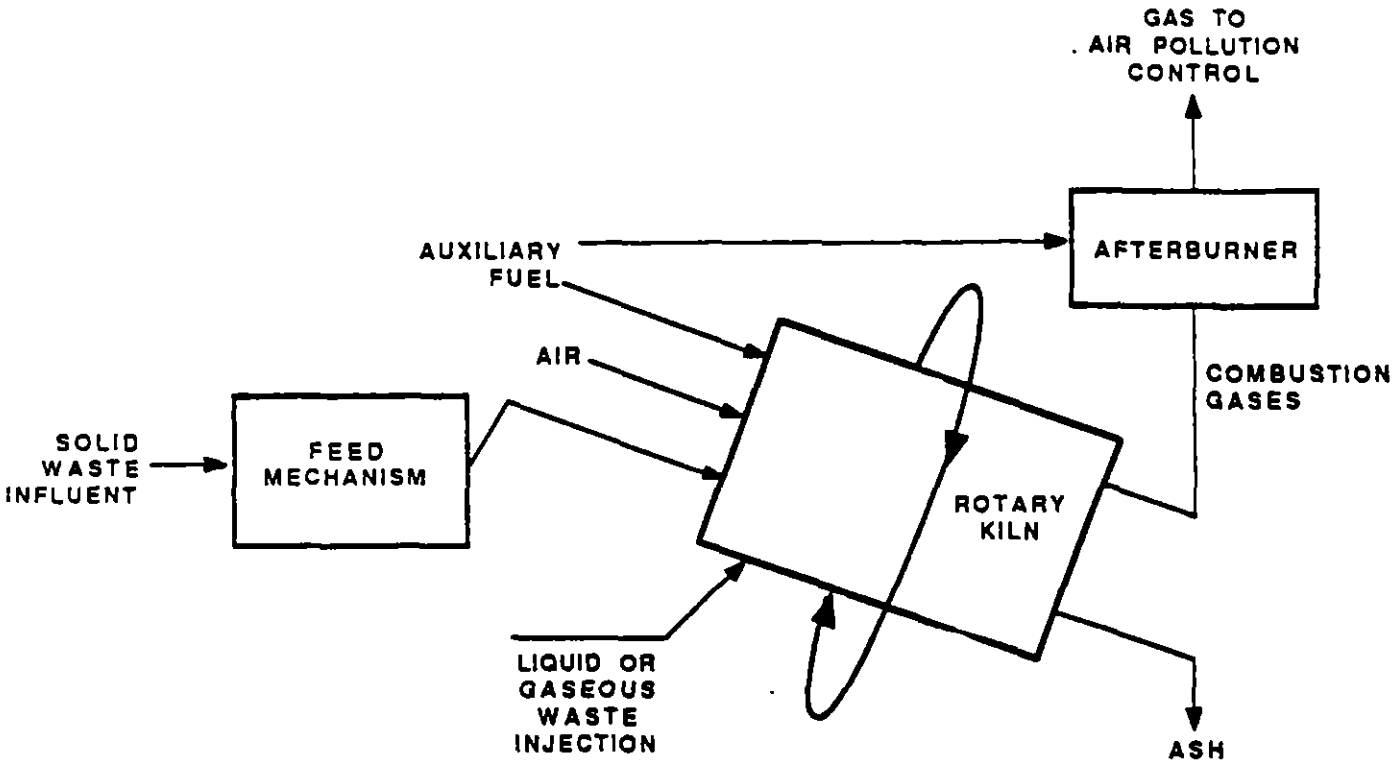

FIGURE 14-2
ROTARY KILN INCINERATOR

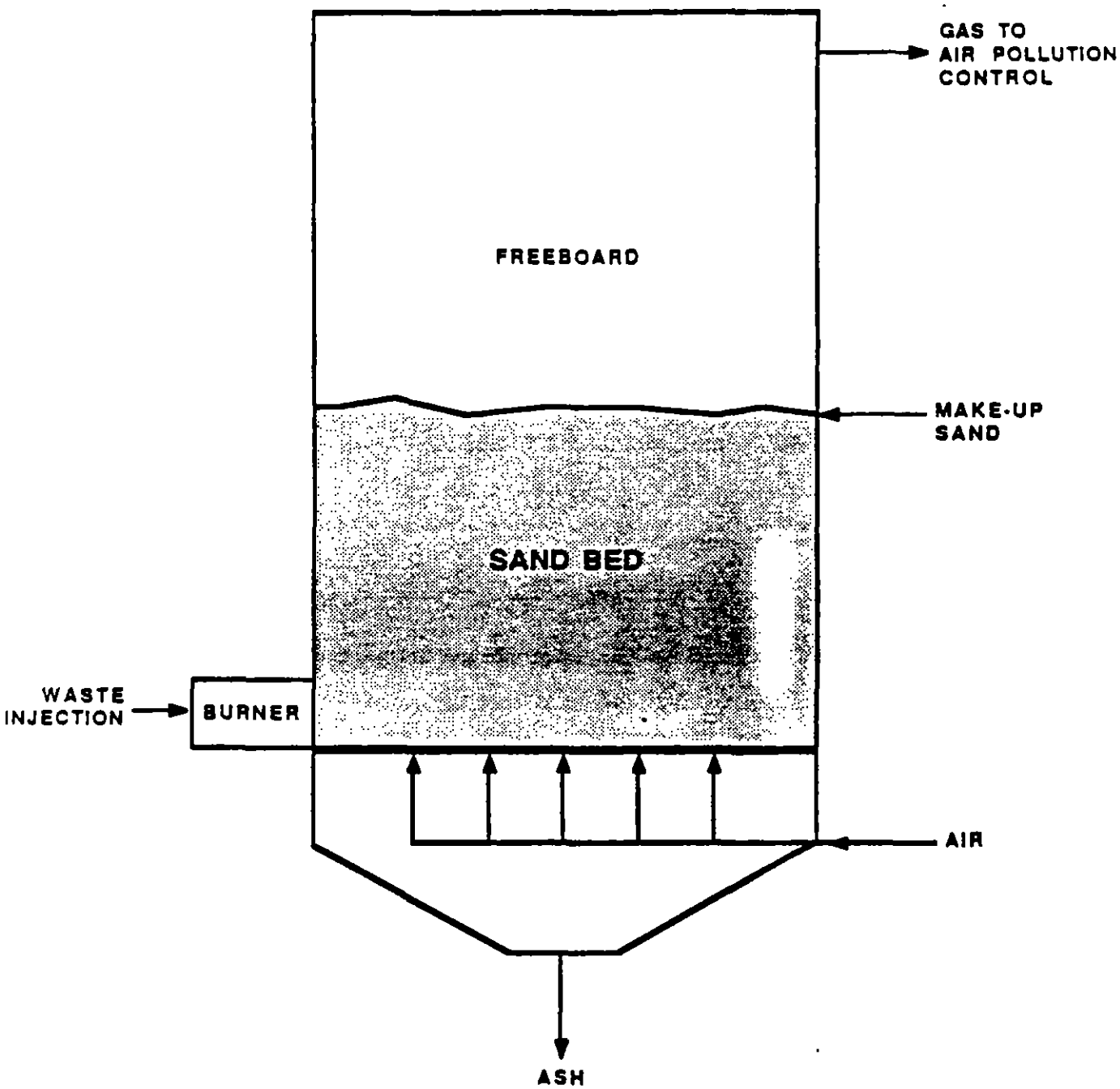

FIGURE 14-3
FLUIDIZED BED INCINERATOR

used for hazardous waste incineration. Fixed hearth incineration is a two-stage combustion process (see Figure 14-4). Waste is fed into the first stage, or primary chamber, and usually burned at less than stoichiometric conditions (less than the theoretically required amount of air). The resultant smoke and pyrolysis products, consisting primarily of volatile hydrocarbons and carbon monoxide, along with the normal products of combustion, pass to the secondary chamber. Here, additional air is usually injected to complete the combustion. This two-stage process generally yields low stack particulate and carbon monoxide (CO) emissions. The primary chamber combustion reactions and combustion gas volumes are maintained at low levels by the starved air conditions so that particulate entrainment and carryover are minimized.

14.3.5 Air Pollution Controls

Following incineration of hazardous wastes, combustion gases are generally further treated in an air pollution control system. The presence of chlorine or other halogens in some waste requires a scrubbing or absorption step to remove hydrogen chloride (HCl) and other halo-acids from the combustion gases. Ash in the waste is not destroyed in the combustion process. Depending on its composition, ash will exit either as bottom ash, at the discharge end of a kiln or hearth for example, or as particulate matter (fly ash) suspended in the combustion gas stream. Particulate emissions from most hazardous waste combustion systems generally have particle diameters of less than 1 micron and require high-efficiency collection devices to minimize air emissions. In

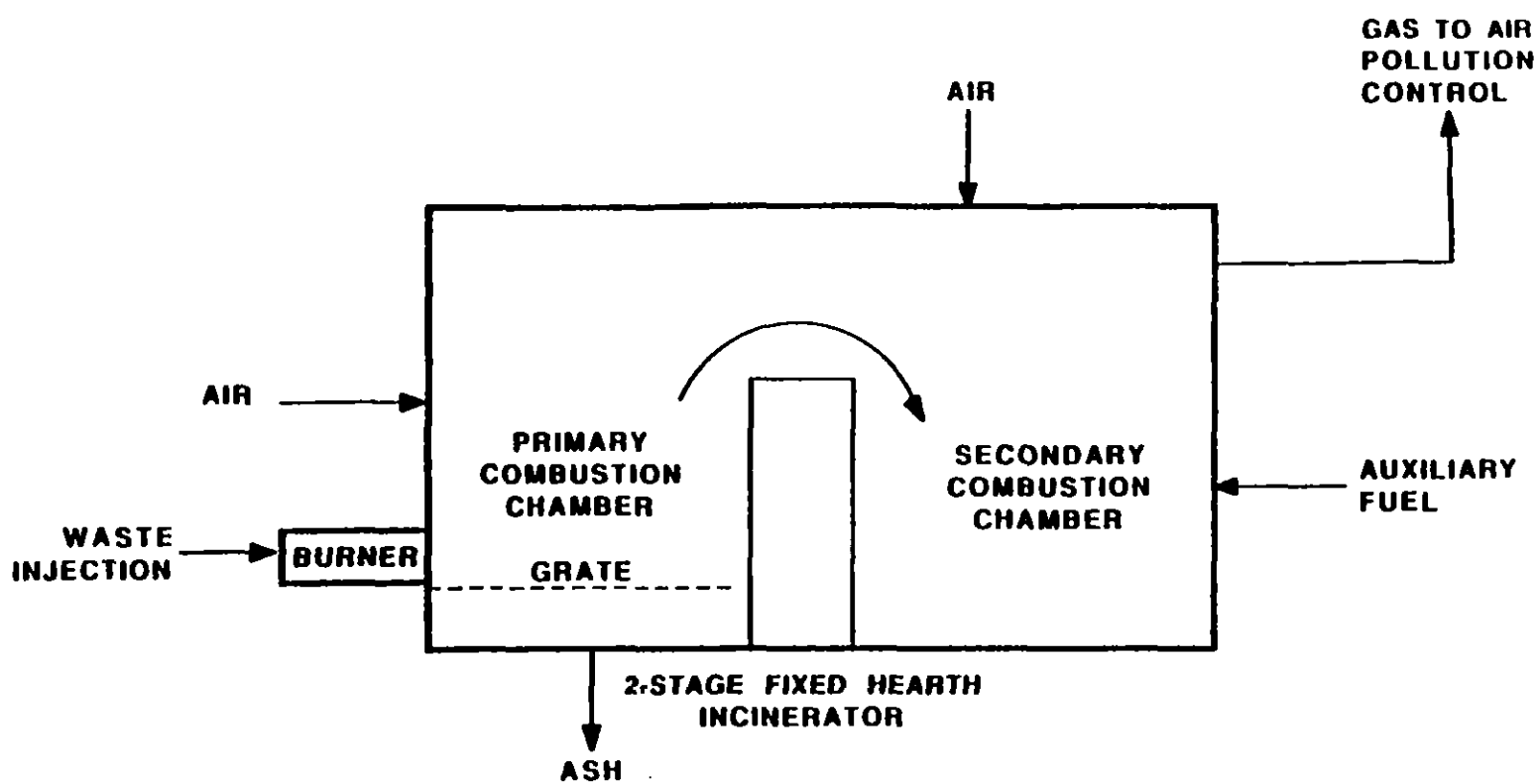

FIGURE 14-4

FIXED HEARTH INCINERATOR

addition, scrubber systems provide an additional buffer against accidental releases of incompletely destroyed waste products resulting from poor combustion efficiency or combustion upsets.

14.4 Waste Characteristics Affecting Performance (WCAPs)

14.4.1 Liquid Injection

In determining whether liquid injection will achieve the same level of performance on an untested waste as on a previously tested waste, and whether performance levels can be transferred, EPA examines the dissociation bond energies of the constituents in the untested and tested wastes. This parameter is being used as a surrogate indicator of activation energy which, as discussed previously, destabilizes molecular bonds. In theory, the bond dissociation energy would be equal to the activation energy; however, in practice this is not always the case. Other energy effects (e.g., vibrational effects, the formation of intermediates, and interactions between different molecular bonds) may have a significant influence on activation energy.

Because of the shortcomings of bond energy calculations in estimating activation energy, EPA analyzed other waste characteristic parameters to determine whether these parameters would provide a better basis for transferring treatment standards from an untested waste to a tested waste. These parameters include heat of combustion, heat of formation, use of available kinetic data to predict activation energies, and general structural class. All of these were rejected for the reasons provided below.

The heat of combustion measures only the difference in energy of the products and reactants; it does not provide information on the transition state (i.e., the energy input needed to initiate the reaction). Heat of formation is used as a tool to predict whether reactions are likely to proceed; however, there are a significant number of hazardous constituents for which these data are not available. The use of kinetic data was rejected because these data are limited and could not be used to calculate dissociation requirements for the wide range of hazardous constituents. Finally, EPA decided not to use structural classes because the Agency believes that evaluation of bond dissociation energies allows for a more direct determination of whether a constituent will be destabilized.

14.4.2 Rotary Kiln/Fluidized Bed/Fixed Hearth

Unlike liquid injection, these incineration technologies always generate a residual ash. Accordingly, in determining whether these technologies will achieve the same level of performance on an untested waste as on a previously tested waste and whether performance levels can be transferred, EPA examines the following waste characteristics that affect volatilization of organics from the waste, as well as destruction of the organics once volatilized. Relative to volatilization, EPA examines the thermal conductivity of the entire waste and the boiling points of the various constituents. As with liquid injection, EPA examines bond energies in determining whether treatment standards for scrubber water residuals can be transferred from a tested waste to an

untested waste. Below is a discussion of how EPA arrived at thermal conductivity and boiling point as the best means to assess volatilization of organics from the waste; the discussion relative to bond energies is the same for these technologies as for liquid injection and is therefore not repeated.

(1) Thermal conductivity. Consistent with the underlying principles of incineration, a major factor with regard to whether a particular constituent will volatilize is the transfer of heat through the waste. In the case of rotary kiln, fluidized bed, and fixed hearth incineration, heat is transferred through the waste by three mechanisms: radiation, convection, and conduction. For a given incinerator, heat transferred through various wastes by radiation is more a function of the design and type of incinerator than of the waste being treated. Accordingly, the type of waste treated has a minimal impact on the amount of heat transferred by radiation. With regard to convection, EPA also believes that the type of heat transfer is generally more a function of the type and design of incinerator than of the waste itself. However, EPA is examining particle size as a waste characteristic that may significantly impact the amount of heat transferred to a waste by convection and thus may impact volatilization of the various organic compounds. The final type of heat transfer, conduction, is the one that EPA believes has the greatest impact on volatilization of organic constituents. To measure this characteristic, EPA uses thermal conductivity; an explanation of this parameter, as well as how it can be measured, is provided below.

Heat flow by conduction is proportional to the temperature gradient across the material. The proportionality constant is a property of the material and is referred to as the thermal conductivity. (Note: The analytical method that EPA has identified for measurement of thermal conductivity is described in Section 5, High Temperature Metals Recovery). In theory, thermal conductivity would always provide a good indication of whether a constituent in an untested waste would be treated to the same extent in the primary incinerator chamber as the same constituent in a previously tested waste.

In practice, thermal conductivity has some limitations in assessing the transferability of treatment standards; however, EPA has not identified a parameter that can provide a better indication of heat transfer characteristics of a waste. Below is a discussion of the limitations associated with thermal conductivity, as well as other parameters considered.

Thermal conductivity measurements, as part of a treatability comparison of two different wastes to be treated by a single incinerator, are most meaningful when applied to wastes that are homogeneous (i.e., uniform throughout). As wastes exhibit greater degrees of nonhomogeneity (e.g., significant concentration of metals in soil), thermal conductivity becomes less accurate in predicting treatability because the measurement essentially reflects heat flow through regions having the greatest conductivity (i.e., the path of least resistance) and not heat flow through all parts of the waste.

Btu value, specific heat, and ash content were also considered for predicting heat transfer characteristics. These parameters can no better account for nonhomogeneity than can thermal conductivity; additionally, they are not directly related to heat transfer characteristics. Therefore, these parameters do not provide a better indication of the heat transfer that will occur in any specific waste.

(2) Boiling point. Once heat is transferred to a constituent within a waste, removal of this constituent from the waste depends on its volatility. As a surrogate for volatility, EPA is using the boiling point of the constituent. Compounds with lower boiling points have higher vapor pressures and, therefore, would be more likely to volatilize. The Agency recognizes that this parameter does not take into consideration the impact of other compounds in the waste on the boiling point of a constituent in a mixture; however, the Agency is not aware of a better measure of volatility that can easily be determined.

14.5 Design and Operating Parameters

14.5.1 Liquid Injection

For a liquid injection unit, EPA's analysis of whether the unit is well designed focuses on both the likelihood that sufficient energy is provided to the waste to overcome the activation level for breaking molecular bonds and whether sufficient oxygen is present to convert the waste constituents to carbon dioxide and water vapor. In assessing the effectiveness of the design and operaton of a liquid injection unit, EPA examines the following parameters: (a) the temperature, (b) the excess

oxygen concentration, (c) the carbon monoxide concentration, and (d) the waste feed rate. Below is a discussion of why EPA believes that these parameters are important, as well as a discussion of how these parameters are monitored during operation.

It is important to point out, relative to the development of land disposal restriction standards, that since liquid injection generally does not produce bottom ash, EPA is concerned with these design parameters only when a quench water or scrubber water residual is generated from treatment of a particular waste. If treatment of a particular waste in a liquid injection unit would not generate a wastewater stream, then the Agency, for purposes of land disposal treatment standards, would be concerned only with the waste characteristics that affect selection of the unit, not with the above-mentioned design parameters.

(1) Temperature. Temperature provides an indirect measure of the energy available (i.e., Btu/hr) to overcome the activation energy of waste constituents. As the design temperature increases, it becomes more likely that the molecular bonds will be destabilized and the reaction completed.

The temperature is normally controlled automatically through the use of instrumentation that senses the temperature and automatically adjusts the amount of fuel and/or waste being fed. The temperature signal transmitted to the controller can be simultaneously transmitted to a recording device and thereby continuously recorded. To fully assess the

operation of the unit, it is important to know not only the exact location in the incinerator at which the temperature is being monitored but also the location of the design temperature.

(2) Excess oxygen concentration. It is important that the incinerator contain oxygen in excess of the stoichiometric amount necessary to convert the organic compounds to carbon dioxide and water vapor. If insufficient oxygen is present, then destabilized waste constituents could recombine to form the same or other BDAT list organic compounds and potentially cause the scrubber water to contain higher concentrations of BDAT list constituents than would be the case for a well-operated unit.

In practice, the amount of oxygen fed to the incinerator is controlled by continuous sampling and analysis of the stack gas. If the amount of oxygen drops below the design value, then the analyzer transmits a signal to the valve or damper controlling the air supply and thereby increases the flow of oxygen. The analyzer simultaneously transmits a signal to a recording device so that the amount of excess oxygen can be continuously recorded. Again, as with temperature, it is important to know the location from which the combustion gas is being sampled.

(3) Carbon monoxide concentration. The carbon monoxide concentration is an important operating parameter because it provides an indication of the extent to which the waste organic constituents are being converted to carbon dioxide and water vapor. An increase in the carbon monoxide level indicates that greater amounts of organic waste

constituents are unreacted or partially reacted. Increased carbon monoxide levels can result from insufficient oxygen, too much oxygen (causing cooling), insufficient turbulence in the combustion zone, or insufficient residence time of combustion gases.

(4) Waste feed rate. It is important to monitor the waste feed rate because it is correlated to the residence time. The residence time is associated with a specific Btu energy value of the feed and a specific volume of combustion gas generated. Prior to incineration, the Btu value of the waste is determined through the use of a laboratory device known as a bomb calorimeter. The volume of combustion gas generated from the waste to be incinerated is determined from a waste analysis referred to as an ultimate analysis. This analysis determines the amount of elemental constituents present, which include carbon, hydrogen, sulfur, oxygen, nitrogen, and halogens. Using this analys s plus the total amount of air added, the volume of combustion gas can be calculated. After both the Btu content and the expected combustion gas volume have been determined, the feed rate can be fixed at the desired combustion gas residence time. Continuous monitoring of the feed rate determines whether the unit was operated at a rate corresponding to the designed residence time.

14.5.2 Rotary Kiln

For this incineration technology, EPA examines both the primary and secondary chamber in evaluating the design of a particular incinerator.

Relative to the primary chamber, EPA's assessment of design focuses on whether it is likely that enough energy is provided to the waste to volatilize the waste constituents. For the secondary chamber, analogous to the sole liquid injection incineration chamber, EPA examines the same parameters discussed previously under liquid injection incineration. (These parameters will not be discussed again here.)

In assessing the effectiveness of the design and operation of the primary chamber, EPA examines the following parameters: (a) the kiln temperature, (b) the residence time of the waste solids, and (c) the revolutions per minute. Below is a discussion of why EPA believes that these parameters are important, as well as a discussion of how these parameters are monitored during operation.

(1) Temperature. The primary chamber temperature is important because it provides an indirect measure of the energy input (i.e., Btu/hr) available for heating the waste. The higher the design temperature in a given kiln, the more likely it is that the constituents will volatilize. As discussed earlier in Section 14.5.1, Liquid Injection, temperature should be continuously monitored and recorded. Additionally, it is important to know the location of the temperature sensing device in the kiln.

(2) Residence time of the waste solids. This parameter is important in that it affects whether sufficient heat is transferred to a particular constituent for volatilization to occur. As the time that the waste is in the kiln is increased, a greater quantity of heat is transferred to

the hazardous waste constituents. The residence time is a function of the specific configuration of the rotary kiln, including the length and diameter of the kiln, the waste feed rate, and the rate of rotation.

(3) Revolutions per minute (RPM). This parameter provides an indication of the turbulence that occurs in the primary chamber of a rotary kiln. As the turbulence increases, the quantity of heat transferred to the waste would also be expected to increase. However, as the RPM value increases, the residence time of waste solids decreases, resulting in a reduction of the quantity of heat transferred to the waste. This parameter needs to be carefully evaluated because it provides a balance between turbulence and residence time.

14.5.3 Fluidized Bed

As discussed previously in Section 14.2, Underlying Principles of Operation, the primary chamber accounts for almost all of the conversion of organic wastes to carbon dioxide and water vapor (and acid gas if halogens are present). The freeboard volume will generally provide additional residence time for combustion gases for thermal oxidation of the waste constituents. Relative to the primary chamber, the parameters that EPA examines in assessing the effectiveness of the design are temperature, residence time, and bed pressure differential. The first two were included in the rotary kiln discussion and will not be discussed here. The last, bed pressure differential, is important in that it provides an indication of the amount of turbulence and, therefore, indirectly the amount of heat supplied to the waste. In general, as the

pressure drop increases, both the turbulence and heat supplied increase. The pressure drop through the bed should be continuously monitored and recorded to ensure that the designed valued is achieved.

14.5.4 Fixed Hearth

The design considerations for this incineration unit are similar to those for a rotary kiln with the exception that rate of rotation (i.e., RPMs) is not an applicable design parameter. For the primary chamber of this unit, the parameters that EPA examines in assessing how well the unit is designed are the same as those discussed under Rotary Kiln (Section 14.5.2); for the secondary chamber (i.e., afterburner), the design and operating parameters of concern are the same as those discussed under Liquid Injection (Section 14.5.1.

14.6 References

Ackerman, D.G., McGaughey, J.F., and Wagoner, D.E. 1983. At sea incineration of PCB-containing wastes on board the M/T Vulcanus. USEPA 600/7-83-024. Washington, D.C.: U.S. Environmental Protection Agency. 1981.

Bonner, T.A., et al. 1981. Engineering handbook for hazardous waste incineration. SW-899. Prepared by Monsanto Research Corporation for US EPA. NTIS PB 81-248163.

Novak, R.G., Troxler, W.L., and Dehnke, T.H. 1984. Recovering energy from hazardous waste incineration. Chemical Engineering Progress 91:146.

Oppelt, E.T. 1987. Incineration of hazardous waste. JAPCA, Vol. 37, no. 5, May 1987.

Santoleri, J.J. 1983. Energy recovery-a by-product of hazardous waste incineration systems. In Proceedings of the 15th Mid-Atlantic Industrial Waste Conference on Toxic and Hazardous Waste.

USEPA. 1986. U.S. Environmental Protection Agency. Best demonstrated available technology (BDAT) background document for F001-F005 spent solvents. Vol. 1, EPA/530-SW-86-056. Washington D.C.: U.S. Environmental Protection Agency.

Vogel, G., et al. Incineration and cement kiln capacity for hazardous waste treatment. In Proceedings of the 12th Annual Research Symposium, Incineration and Treatment of Hazardous Wastes. Cincinnati, Ohio, April 1986.

Mitre Corp. 1983. Guidance manual for hazardous waste incinerator permits. NTIS PB84-100577.

solvent. Separation of the solvent phase and the waste stream phase occurs under quiescent conditions, relying on the density differences between the two phases.

The solvent solution containing the extracted contaminants is called the extract, and the extracted waste stream with the contaminants removed is called the raffinate. The extract can be either the heavy (more dense) phase or the light (less dense) phase.

15.3 Description of Solvent Extraction Processes

The simplest, least effective solvent extraction unit is a single-stage system (mixer-settler system). The solvent and the liquid waste stream are mixed together; the raffinate and extract are separated by settling without further extraction.

The more effective multistage contact extraction is basically a series of mixer-settler units. The waste stream is contacted with solvent in a series of successive steps or stages. Raffinate from the first extraction stage is contacted with fresh solvent in a second stage, and so on.

In countercurrent, multistage extraction columns, fresh solvent and the waste stream enter at opposite ends of a column consisting of a series of extraction stages. Extract and raffinate layers pass continuously and countercurrently from stage to stage through the system.

Several types of extraction systems are used for contact and separation. Three of the most common systems--mixer-settler systems, extraction columns, and centrifugal contactors--are discussed below.

15.3.1 Mixer-Settler Systems

Single-stage mixer-settler systems are extraction systems composed of a mixing chamber for phase dispersion, followed by a settling chamber for phase separation. Mixer-settler systems are typically used to treat solids or highly viscous wastes and can handle difficult dispersion systems. The vessels may be either vertical or horizontal. Dispersion in the mixing chamber occurs by pump circulation, nonmechanical in-line mixing, air agitation, or mechanical stirring.

In a two-stage mixer-settler system (a simple multistage contact extractor), as shown in Figure 15-1, the extract from the first stage is sent to a recovery unit to separate the solvent from the remaining extract containing the organic constituents of concern. The solvent is recycled, and the remaining extract is either reused or further treated in an incineration unit. The raffinate from the first stage is sent to the second-stage unit for additional extraction. Recycled solvent from recovery of the first-stage extract and/or fresh solvent makeup is added to the first-stage raffinate before it is mixed and sent to the second-stage. The extract from the second stage, containing mainly solvent, is recycled to the first-stage unit as the solvent stream. The resulting raffinate from the second stage may require filtering to remove solids before it is sent to further treatment if required. Any solids collected during filtration are land disposed unless they contain treatable levels of hazardous constituents. If they do contain treatable levels of hazardous constituents, they will require further treatment, such as stabilization (for metals) and/or incineration (for organics).

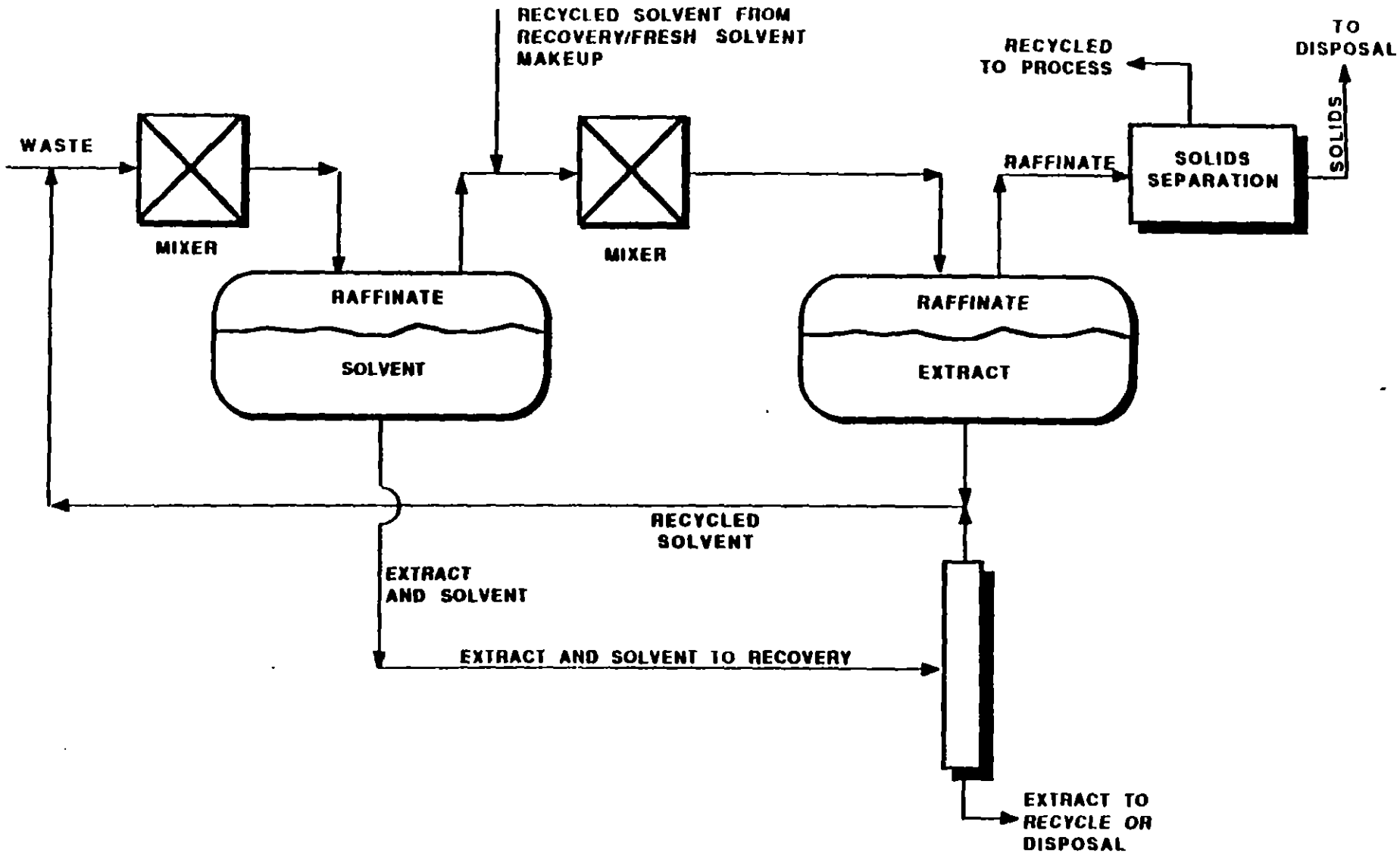

FIGURE 15-1 TWO-STAGE MIXER-SETTLER SOLVENT EXTRACTION SYSTEM

Parameters such as the density or specific constituent concentrations in the extract may be monitored to determine when the second stage extract must be sent to solvent recovery and when fresh or recycled solvent must be added to the first-stage unit.

15.3.2 Extraction Columns

Extraction columns are countercurrent, multistage contact systems. Two types of extraction columns are packed extractors and sieve-tray extractors. Figure 15-2 presents schematics of these two types of extraction columns.

A packed extractor contains plastic or ceramic materials in various geometric shapes or structured packings of wire gauze or mesh. Mass transfer of the solute to the extract is promoted because of breakup and distortion of the dispersed phase as it contacts the packing, resulting in the intimate mixing of the solute and the solvent.

The sieve-tray extractor is similar to the sieve-tray column used in fractionation distillation. Tray perforations produce the formation of liquid droplets that aid the mass transfer process by allowing for more intimate contact between the solute and the solvent.

15.3.3 Centrifugal Contactors

Centrifugal contactors are based on the application of centrifugal force to increase rates of countercurrent flow and enhance separation of the phases. Centrifugal units are used when short contact times are required, such as when unstable materials are being processed. One type of centrifugal contactor consists of a drum that rotates around a shaft equipped with annular passages at each end for feed and raffinate. The

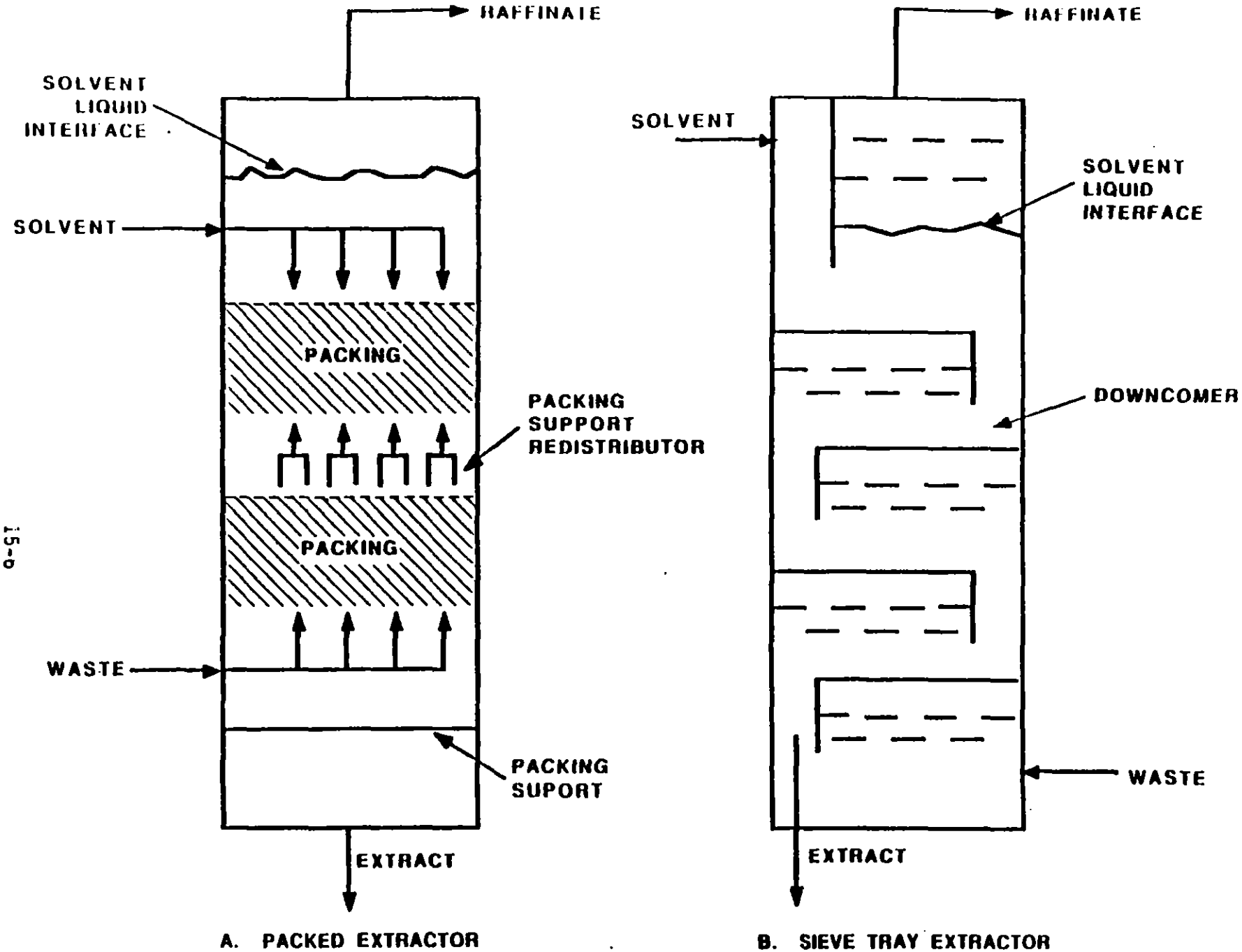

Figure 15-2

EXTRACTION COLUMNS WITH NONMECHANICAL AGITATION

light phase is injected under pressure through a shaft and is then routed to the periphery of the drum through perforations. The heavy phase is also charged through the shaft, but it is channeled to the center of the drum through perforations. Centrifugal force acting on the phase-density difference promotes dispersion as the phases are forced through the perforations. Centrifugal extractors provide short contact time, have minimal space requirements, and easily handle emulsified materials and fluids having small density differences.

15.4 Waste Characteristics Affecting Performance (WCAPs)

In determining whether solvent extraction will achieve the same level of performance on an untested waste as on a previously tested waste and whether performance levels can be transferred, EPA examines the following waste characteristics: (a) the concentration of extractable hydrocarbons, (b) the solubility of the waste constituents of concern in the solvent, and (c) the surface tension.

15.4.1 Concentration of Extractable Hydrocarbons

The concentration of extractable hydrocarbons in the waste feed is a measure of the maximum fraction of the waste that can be expected to be extracted in the solvent extraction process. A relatively low concentration of extractable hydrocarbons implies that most of the waste may become raffinate or waste solids (i.e., is nonextractable). Total extractable hydrocarbon content can be estimated by measurement of the total organic carbon (TOC) content. If the TOC of an untested waste is significantly lower than that of the tested waste, the system may not achieve the same performance. More rigorous extraction conditions such

as higher temperatures and pressures, additional mixing, and longer settling times may be required to extract less extractable components and achieve the same treatment performance, or other, more applicable treatment technologies may need to be considered for treatment of the untested waste.

15.4.2 Solubility of the Waste Constituents of Concern in the Solvent

The constituents in the waste feed that are to be extracted determine the type of solvent that is best suited for the extraction process. For example, polar molecules in an organic feed can be extracted with an aqueous solvent. Conversely, organic constituents in aqueous feeds can be extracted with organic solvents. Metal-containing wastes may be extracted with organic acids (e.g., trialkylphosphoric, sulfuric, and carboxylic acids) or amine solvents. If the solubility of the waste constituents of concern in the solvent in the untested waste is significantly lower than that in the tested waste. the system may not achieve the same performance. Use of another solvent may be required to increase the solubility of the waste constituents of concern and achieve the same treatment performance, or other, more applicable treatment technologies may need to be considered for treatment of the untested waste.

15.4.3 Surface Tension

The surface tension of the waste is a measure of the tendency of the waste to foam. The higher the surface tension of the liquid, the higher its tendency to foam. If foaming is likely, the system design must be modified or defoaming compounds may be required. For column extractors,

packed columns are less susceptible to foaming than tray columns. If the surface tension of the untested waste is significantly higher than that of the tested waste, the system may not achieve the same performance. Defoaming compounds and/or the use of a packed column may be required to reduce foaming and achieve the same treatment performance, or other, more applicable treatment technologies may need to be considered for treatment of the untested waste.

15.5 Design and Operating Parameters

In assessing the effectiveness of the design and operation of a solvent extraction system, EPA examines the following parameters: (a) the number of separation stages, (b) the extraction temperature and pH, (c) the degree of mixing, (d) the residence time, and (e) the settling time.

15.5.1 Number of Separation Stages

For extraction columns, the number of theoretical stages required to achieve the desired separation of hazardous constituents from a liquid waste into the selected solvent is calculated from solvent equilibrium data, which are determined empirically. Using the theoretical number of stages, the actual number of stages can then be determined through the use of empirical tray efficiency data typically supplied by an equipment manufacturer. EPA examines the actual number of stages in a solvent extraction column system to ensure that the system is designed to achieve an effective degree of extraction.

15.5.2 Extraction Temperature and pH

Temperature and pH changes can affect equilibrium conditions and, consequently, the performance of the extraction system. EPA monitors the temperature and pH continuously, if possible, to ensure that the system is operated at the appropriate design conditions and to diagnose operational problems.

15.5.3 Degree of Mixing

For mixer-settler extractors, mixing determines the amount of contact between the two immiscible phases and, accordingly, the degree of mass transfer of the constituents to be extracted. Intense agitation to provide high rates of mass transfer, however, can produce solvent waste dispersions that are difficult to separate into distinct phases. The quantifiable degree of mixing is a complex assessment that includes, among other things, the amount of energy supplied, the length of time the material is mixed, and the related turbulence effects of the specific size and shape of the tank vessel. This is beyond the scope of simple measurement. EPA, however, evaluates the degree of mixing qualitatively by considering whether the type of mixing device provided is one that could be expected to achieve uniform mixing of the waste.

15.5.4 Residence Time

The residence time in the extraction vessel impacts the extent of extraction of organic contaminants from the waste. It is dependent on the solubility of the organic contaminants in the solvent. For a batch system, the residence time is controlled directly by adjusting the treatment time in the extraction vessel. For a continuous system, the

waste feed rate is controlled to ensure that the system is operating at the appropriate design residence time. EPA monitors the residence time to ensure that sufficient time is provided to effectively extract the organic contaminants from the waste.

15.5.5 Settling Time

For mixer-settler extractors, adequate settling time must be provided to make sure that separation of the phases has been effectively completed. EPA monitors the settling time to ensure effective phase separation.

15.6 References

De Renzo, D.J., ed. 1978. Unit operations for treatment of hazardous industrial wastes. Park Ridge, N.J.: Noyes Data Corporation.

Gallacher, L.V. 1981. Liquid ion exchange in metal recovery and recycling. Third Conference on Advanced Pollution Control for the Metal Finishing Industry. USEPA 600/2-81-028. pp. 39-41.

Hackman, E. 1978. Toxic organic chemicals, destruction and waste treatment. pp. 109-111. Park Ridge, N.J.: Noyes Data Corporation.

Hanson, C. 1968. Solvent extraction theory, equipment, commercial operations, and economics. Chemical Engineering, August 26, 1968, p. 81.

Humphrey, J.L., Rocha, J.A. and Fair, J.R. 1984. The essentials of extraction. Chemical Engineering, pp. 76-95.

Lo, Teh C., Baird, M.H.I. and Manson, C., eds. 1983. Handbook of solvent extraction. pp. 53-89. New York: John Wiley and Sons.

Perry, R.H., and Chilton, C.H. 1973. Chemical Engineer's Handbook, 5th ed., pp. 15-1 to 15-24. New York: McGraw-Hill Book Company.

16. STEAM STRIPPING

16.1 Applicability

Steam stripping is a form of distillation applicable to the treatment of wastewaters containing organics that are volatile enough to be removed by the application of heat using steam as the heat source. Typically, steam stripping is applied where there is less than 1 percent volatile organics in the waste.

16.2 Underlying Principles of Operation

The basic principle of operation for steam stripping is the volatilization of hazardous constituents through the application of heat. The constituents that are volatilized are then condensed and typically either reused or further treated by liquid injection incineration.

An integral part of the theory of steam stripp ng is the principle of vapor-liquid equilibrium. When a liquid mixture of two or more components is heated, the vapor phase present above the liquid phase becomes more concentrated in the more volatile constituents (those having higher vapor pressures). The vapor phase above the liquid phase is then cooled to yield a condensate that is also more concentrated in the more volatile components. The degree of separation of components depends on the relative differences in the vapor pressures of the constituents; the larger the difference in the vapor pressures, the more easily the separation can be accomplished.

If the difference between the vapor pressures is extremely large, a single separation cycle or a single equilibrium stage of vaporization and condensation may achieve a significant separation of the constituents (Typically, batch distillation or thin film evaporation would be used in such a case.) If the difference between the vapor pressures is small, then multiple equilibrium stages are needed to achieve effective separation. In practice, the multiple equilibrium stages are obtained by stacking trays or placing packing into a column. Essentially, each tray represents one equilibrium stage. In a packed steam stripping column, the individual equilibrium stages are not discernible, but the number of equivalent trays can be calculated from mathematical relationships using the height of the packing. The vapor phase from a tray rises to the tray above it, where it condenses; the liquid phase falls to the tray below it, where it is again heated and separated.

The vapor-liquid equilibrium of the waste components can be expressed as relative volatility, which is the ratio of the vapor-to-liquid concentrations of a constituent divided by the ratio of the vapor-to-liquid concentrations of another constituent. The relative volatility is a direct indicator of the ease of separation. If the numerical value is 1, then separation is impossible because the constituents have the same concentrations in the vapor and liquid phases. When the relative volatility is 1, the liquid mixture is called an azeotrope. Separation becomes easier as the value of the relative volatility becomes increasingly different from unity.

16.3 Description of Steam Stripping Process

A steam stripping unit consists of a boiler, a stripping column, a condenser, and a collection tank, as shown in Figure 16-1. The boiler provides the heat required to vaporize the liquid fraction of the waste. The stripping column is composed of a set of trays or packing placed in a vertical column.

The stripping process uses multiple equilibrium stages, with the initial waste mixture entering at the top, the uppermost equilibrium stage. The boiler is located beneath the lowermost equilibrium stage, allowing the vapor to move upward in the column, coming into contact with the falling liquid. As the vapor comes into contact with the liquid at each stage, the more volatile components are removed or "stripped" from the liquid by the vapor phase. The concentration of the emerging vapor is enriched in the more volatile constituents, and the liquid exiting the bottom of the boiler ("bottoms") contains high concentrations of the lower vapor pressure constituents, often predominately water. This effluent from the bottom of the stripper is reduced in organic content but may still require additional treatment such as carbon adsorption or biological treatment. The steam and organic vapors exiting the top of the column are condensed and separated in a product receiver. Organics in the organic phase are typically recovered or disposed of in a liquid injection incinerator. The aqueous condensate is recycled to the stripper.

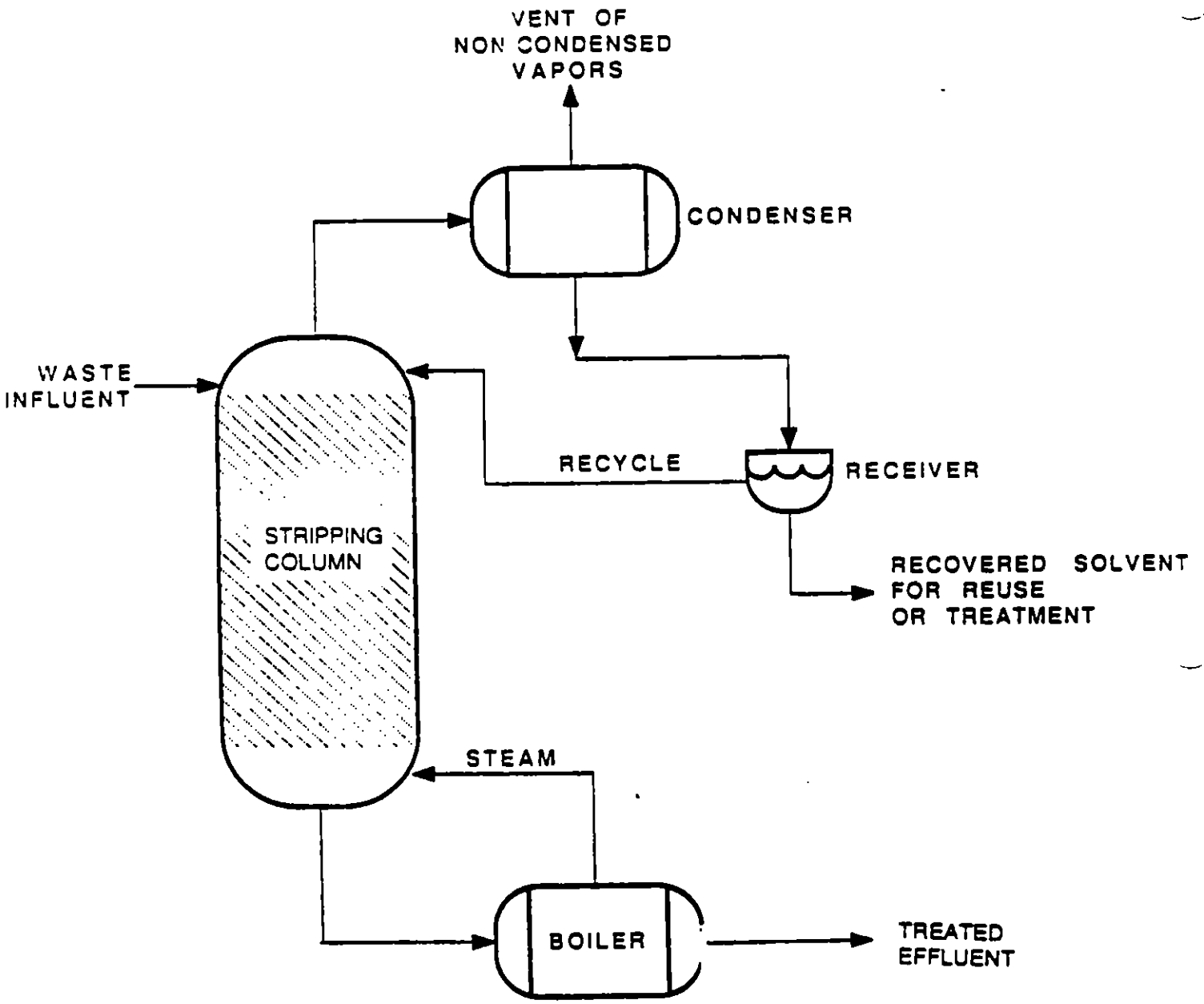

FIGURE 16-1
STEAM STRIPPING

16.4 Waste Characteristics Affecting Performance (WCAPs)

In determining whether steam stripping will achieve the same level of performance on an untested waste as on a previously tested waste and whether performance levels can be transferred, EPA examines the following waste characteristics: (a) the component boiling points, (b) the concentration of suspended solids, (c) the concentration of volatile components, (d) the surface tension, and (e) the concentration of oil and grease.

16.4.1 Component Boiling Points

As noted earlier, the greater the ratio of volatility of the waste constituents, the more easily the separation of these constituents can proceed. This ratio is called relative volatility. EPA recognizes, however, that relative volatilities cannot be measured or calculated directly for the complex types of wastes generally treated by steam stripping. This is because the wastes usually consist of a myriad of components, all with different vapor pressure-versus-temperature relationships. Determining relative volatilities is further complicated by the fact that the relative volatility changes as the temperature conditions change throughout the steam stripping column (the column is cooler at the top than at the bottom). However, because the volatility of components is usually inversely proportional to their boiling points (i.e., the higher the boiling point, the lower the volatility), EPA uses the boiling point of waste components as a surrogate waste characteristic for relative volatility. If the differences in boiling points between

the more volatile and less volatile (water) constituents are significantly lower in the untested waste than those in the tested waste. the system may not achieve the same performance and other, more applicable treatment technologies may need to be considered for treatment of the untested waste.

16.4.2 Concentration of Suspended Solids

Wastes containing large amounts of suspended solids, organic or inorganic, may clog column internals and coat heat transfer surfaces, thereby inhibiting mass transfer of constituents between the vapor and liquid phases. If the concentration of suspended solids in the untested waste is significantly higher than that in the tested waste, the system may not achieve the same performance. Filtration may be required prior to steam stripping to reduce the concentration of suspended solids and achieve the same treatment performance, or other, more applicable treatment technologies may need to be considered for treatment of the untested waste.

16.4.3 Concentration of Volatile Components

The concentration of volatile components is a measure of the maximum fraction of the waste that can be expected to volatilize in the steam stripping column. An extremely high concentration of volatile components may imply that adequate separation will not occur. If the concentration of volatile components in the untested waste is significantly higher than that in the tested waste, the system may not achieve the same

performance. Higher temperatures, lower pressures, and/or an increase in the number of separation stages may be required to volatilize less volatile compounds and achieve the same treatment performance, or other, more applicable technologies may need to be considered for treatment of the untested waste.

16.4.4 Surface Tension

The surface tension of the waste is a measure of the tendency of the waste to foam. The higher the surface tension of the liquid, the higher its tendency to foam. The likelihood of foaming requires special column design or the incorporation of defoaming compounds. If the surface tension of the untested waste is significantly higher than that of the tested waste, the system may not achieve the same performance. Defoaming compounds and/or the use of a packed column may be required to reduce foaming and achieve the same treatment performance. or other, more applicable treatment technologies may need to be considered for treatment of the untested waste.

16.4.5 Concentration of Oil and Grease

High concentrations of oil and grease may clog steam stripping equipment, thereby reducing its effectiveness. If the concentration of oil and grease in the untested waste is significantly higher than that in the tested waste, the system may not achieve the same performance and other, more applicable treatment technologies may need to be considered for treatment of the untested waste.

16.5 Design and Operating Parameters

In assessing the effectiveness of the design and operation of a steam stripping system, EPA examines the following parameters: (a) the number of separation stages, (b) the liquid and vapor flow rates, (c) the stripping temperature and pressure, and (d) the internal column design.

16.5.1 Number of Separation Stages

The number of theoretical stages in the steam stripping column required to achieve the desired separation of the more volatile constituents from the less volatile constituents is calculated from vapor-liquid equilibrium data, which are determined empirically. Using the theoretical number of stages, the actual number of stages can then be determined through the use of empirical tray efficiency data typically supplied by an equipment manufacturer. EPA examines the actual number of stages in the steam stripping column to ensure that the system is designed to achieve an effective degree of separation of organics from the wastewater.

16.5.2 Liquid and Vapor Flow Rates

The vapor-liquid equilibrium data are also used to determine the liquid and vapor flow rates that provide sufficient contact between the liquid and vapor streams. These rates are affected by the column diameter. EPA monitors the liquid and vapor flow rates to ensure that sufficient contact time between the liquid and vapor streams is provided to effectively separate the organics from the wastewater.

16.5.3 Stripping Temperature and Pressure

These parameters are integrally related to the vapor-liquid equilibrium conditions. The temperature at any point in the stripping column is an indicator of the constituent concentrations at that point, thus revealing whether the separation of components is taking place as expected. Overall column pressure influences the boiling point of the liquid at any location in the column. For example, through application of a partial vacuum to the column, the temperatures required to achieve the desired separation can be reduced because liquids volatilize at lower temperatures at reduced pressures. EPA monitors the temperature and pressure of a steam stripping column continuously, if possible, to ensure that the system is operating at the appropriate design conditions and to diagnose operational problems.

16.5.4 Internal Column Design

Column internals are designed to accommodate the physical and chemical properties of the wastewater to be stripped. Two types of internals may be used in steam stripping: trays or packing. Tray types include bubble cap, sieve, valve, and turbo-grid. Trays have several advantages over packing. They are less susceptible to blockage by solids, they have a lower capital cost for large-diameter columns (greater than approximately 3 feet), and they accommodate a wider range of liquid and vapor flow rates. Compared to trays, packing has the advantages of having a lower pressure drop per theoretical stage, being more resistant to corrosive materials, having a lower capital cost for

small-diameter columns (less than approximately 3 feet), and being less susceptible to foaming because of a more uniform flow distribution (i.e., lower local variations in flow rates). EPA examines the internal column design of a steam stripping column to ensure that the system is designed to handle potential operational problems (e.g., corrosion, foaming, channeling, etc.).

16.6 References

DeRenzo, D.J., ed. 1978. Unit operation for treatment of hazardous industrial wastes. Park Ridge, N.J.: Noyes Data Corporation,

Kirk-Othmer. 1965. Encyclopedia of chemical technology. 2nd ed., Vol. 7, pp. 204-248. New York: John Wiley and Sons.

McCabe, W.L., Smith, J.C., and Harriot, P.. 1985. Unit operations of chemical engineering. pp. 533-606. New York: McGraw-Hill Book Co.

Perry, R.H. and Chilton, C.H. 1973. Chemical engineers' handbook, 5th ed., pp. 13-1 to 13-60. New York: McGraw-Hill Book Co.

Rose, L.M. 1985. Distillation design in practice. pp. 1-307. New York: Elsevier.

Van Winkle, M. 1967. Distillation. pp. 1-684. New York: McGraw-Hill Book Co.

Water Chemical Corporation. 1984. Process design manual for stripping of organics. PB84-232628. pp. 1-1 to F4. Prepared for the Industrial Environmental Research Laboratory, Office of Research and Development, U.S. Environmental Protection Agency.

17. THIN FILM EVAPORATION

17.1 Applicability

Thin film evaporation is a form of distillation applicable to the treatment of wastes containing organics that are volatile enough to be removed by the application of heat. This technology can be used to treat highly concentrated organic wastes. However, the feed stream to a thin film evaporator must contain low concentrations of suspended solids. Use of this technology results in an organic product stream, which may be reused or further treated, and a bottoms stream, which is often incinerated.

17.2 Underlying Principles of Operation

As with other forms of distillation, the basic principle of thin film evaporation is the separation of a liquid mixture into various components by a process of vaporization-condensation. The constituents that are volatilized are then condensed and either reused or further treated by liquid injection incineration. The constituents that are not volatilized may also be reused or incinerated as applicable.

An integral part of the theory of thin film evaporation is the principle of vapor-liquid equilibrium. When a liquid mixture of two or more components is heated, the vapor phase present above the liquid phase becomes more concentrated in the more volatile constituents (those having the higher vapor pressures). The vapor phase above the liquid phase is then cooled to yield a condensate that is also more concentrated in the more volatile components. The remaining liquid phase is richer in the less volatile components. The degree of separation of components depends

on the relative differences in the vapor pressures of the constituents: the larger the difference in the vapor pressures, the more easily the separation can be accomplished.

If the difference between the vapor pressures is extremely large, a single separation cycle or a single equilibrium stage of vaporization and condensation may achieve a significant separation of the constituents. Typically, thin film units contain only one equilibrium stage and are thus limited in the degree of separation by the relative volatilities of the constituents. The greater the difference in component volatilities, the more likely it is that thin film evaporation will be effective.

The vapor-liquid equilibrium of the waste components can be expressed as relative volatility, which is the ratio of the vapor-to-liquid concentrations of a constituent divided by the ratio of the vapor-to-liquid concentrations of another constituent. The relative volatility is a direct measure of the ease of separation. If the numerical value is 1, then separation using thin film evaporation is impossible because the constituents have the same concentrations in the vapor and liquid phases. When the relative volatility is 1, the liquid mixture is called an azeotrope. Separation becomes easier as the value of the relative volatility becomes increasingly different from unity.

17.3 Description of Thin Film Evaporation Process

Typically, thin film evaporation consists of a steam-jacketed cylindrical vessel and a condenser. Figure 17-1 is a schematic showing the major components of a thin film evaporator. The steam-heated surface of the cylindrical vessel provides the heat required to vaporize the

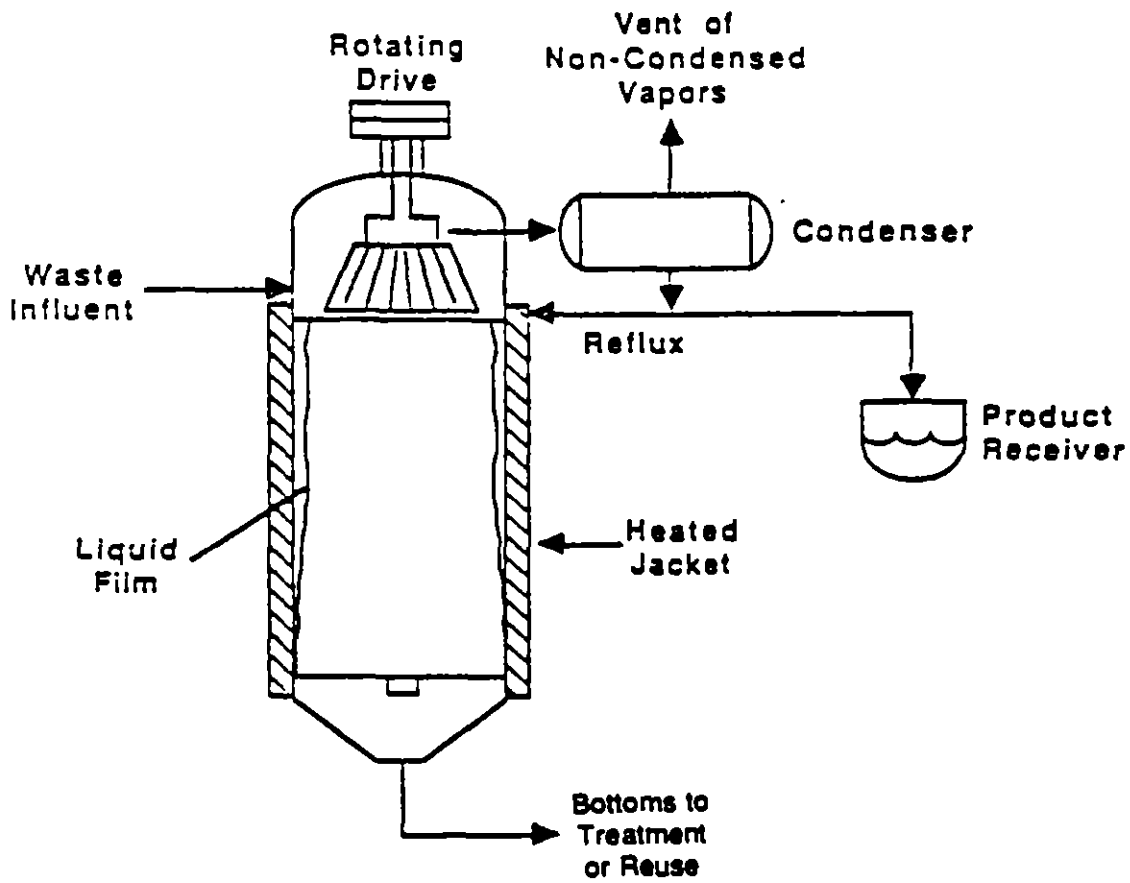

Figure 17-1
Thin Film Evaporation

volatile constituents in the waste. The evaporator walls are heated from the outside as the feed trickles down the inside walls in a thin film. Unique to this form of distillation is the distribution device that spreads the thin film over the heated surface. The feed rate of waste is controlled to allow the more volatile material adequate time to vaporize. The heat transfer from the heating medium (steam) to the waste is determined by their relative temperatures, the heat transfer rate of the vessel materials, and the thermal properties of the waste stream forming the film. The rising vapor is collected at the top of the column, cooled, and condensed in a condenser. The condensed liquid product stream is then routed to a product receiver. The "bottoms," which are the least volatile components of the waste, are continuously withdrawn from the bottom of the thin film evaporator. Because thin film evaporation is used to remove the volatile organics from wastes, the bottoms are reduced in volatile organic content. However, the bottoms generally require additional treatment, such as incineration for residual, less volatile organics, prior to disposal.

17.4 Waste Characteristics Affecting Performance (WCAPs)

In determining whether thin film evaporation will achieve the same level of performance on an untested waste as on a previously tested waste and whether performance levels can be transferred, EPA examines the following waste characteristics: (a) the component boiling points, (b) the concentration of suspended solids, (c) the concentration of volatile components, and (d) the concentration of oil and grease.

17.4.1 Component Boiling Points

As noted earlier, the greater the ratio of volatility of the waste constituents, the more easily the separation of these constituents can proceed. This ratio is called relative volatility. EPA recognizes, however, that the relative volatilities cannot be measured or calculated directly for the types of wastes generally treated by thin film evaporation. This is because the wastes usually consist of a myriad of components, all with different vapor pressure-versus-temperature relationships. However, because the volatility of components is usually inversely proportional to their boiling points (i.e., the higher the boiling point, the lower the volatility), EPA uses the boiling point of waste components as a surrogate for relative volatility. If the differences in boiling points between the more volatile and less volatile constituents are lower in the untested waste than in the tested waste, the system may not achieve the same performance and other, more applicable treatment technologies may need to be considered for treatment of the untested waste.

17.4.2 Concentration of Suspended Solids

Wastes containing large amounts of suspended solids, organic or inorganic, may coat heat transfer surfaces, thereby disturbing the uniform film and inhibiting volatilization of constituents. If the concentration of suspended solids in the untested waste is significantly higher than that in the tested waste, the system may not achieve the same

performance. Filtration may be required prior to thin film evaporation to reduce the concentration of suspended solids and achieve the same treatment performance, or other, more applicable treatment technologies may need to be considered for treatment of the untested waste.

17.4.3 Concentration of Volatile Components

The concentration of volatile components is a measure of the maximum fraction of the waste that can be expected to volatilize in the thin film evaporator. A relatively low concentration of volatile components implies that most of the waste may become bottoms (i.e., is nonvolatile). If the concentration of volatile components in the untested waste is significantly lower than that in the tested waste, the system may not achieve the same performance. Higher temperatures may be required to volatilize less volatile compounds and achieve the same treatment performance, or other, more applicable treatment technologies may need to be considered for treatment of the untested waste.

17.4.4 Concentration of Oil and Grease

High concentrations of oil and grease in the waste may result in coating of the evaporator walls, preventing a uniform film from forming and inhibiting volatilization of waste components. If the concentration of oil and grease in the untested waste is significantly higher than that in the tested waste, the system may not achieve the same performance and other, more applicable treatment technologies may need to be considered for treatment of the untested waste.

17.5 Design and Operating Parameters

In assessing the effectiveness of the design and operation of a thin film evaporation system, EPA examines the following parameters: (a) the evaporator surface area, (b) the evaporation temperature and pressure, and (c) the residence time.

17.5.1 Evaporator Surface Area

The evaporator surface area required to achieve the desired volatilization of organic components from the waste is calculated from the vapor-liquid equilibrium data, which are determined empirically, and from waste liquid flow rates. EPA examines the surface area of the evaporator to ensure that sufficient surface area is provided to achieve effective volatilization of the more volatile organic components.

17.5.2 Evaporation Temperature and Pressure

These parameters are integrally related to the vapor-liquid equilibrium conditions. To achieve the desired volatilization, the temperature of the evaporator must be maintained high enough to volatilize the volatile components from the waste at the waste flow rate. If the evaporator is operated at pressures below atmospheric (slight vacuum), lower temperatures can be used, requiring less heat input, because boiling points decrease as pressures decrease. EPA monitors the thin film evaporator temperature as well as the pressure (if pressures other than atmospheric are used) continuously, if possible, to ensure that the system is operating at the appropriate design conditions and to diagnose operational problems.

17.5.3 Residence Time.

The residence time is determined by the energy input into the system as well as the volatility of the components and the degree of purity desired. EPA monitors the waste feed rate to ensure that sufficient residence time is provided to effectively volatilize organic components from the waste.

17.6 References

DeRenzo, D.J., ed. 1978. Unit operation for treatment of hazardous industrial wastes. Park Ridge, N.J.: Noyes Data Corporation,

Kirk-Othmer. 1965. Encyclopedia of chemical technology. 2nd ed., Vol. 7, pp. 204-248. New York: John Wiley and Sons.

McCabe, W.L., Smith, J.C., and Harriot, P.. 1985. Unit operations of chemical engineering. pp. 533-606. New York: McGraw-Hill Book Co.

Perry, R.H. and Chilton, C.H. 1973. Chemical engineers' handbook, 5th ed., pp. 13-1 to 13-60. New York: McGraw-Hill Book Co.

Rose, L.M. 1985. Distillation design in practice. pp. 1-307. New York: Elsevier.

Van Winkle, M. 1967. Distillation. pp. 1-684. New York: McGraw-Hill Book Co.

Water Chemical Corporation. 1984. Process design manual for stripping of organics. PB84-232628. pp. 1-1 to F4. Prepared for the Industrial Environmental Research Laboratory, Office of Research and Development, U.S. Environmental Protection Agency.

18. CARBON ADSORPTION

18.1 Applicability

Carbon adsorption is a treatment technology used to treat wastewaters containing dissolved organics at concentrations less than 1,000 mg/l and, to a lesser extent, dissolved metal and other inorganic contaminants. The most effective metals removal is achieved with metal complexes.

The two most common carbon adsorption processes are the granular activated carbon (GAC), which is used in packed beds, and the powdered activated carbon (PAC), which is added loosely to wastewater. This section discusses the GAC process; the PAC process is discussed in Section 9 of this report, Aerobic Biological Treatment.

18.2 Underlying Principles of Operation

The basic principle of operation for carbon adsorption is the mass transfer and adsorption of a molecule from a liquid or gas onto a solid surface. Activated carbon is manufactured in such a way as to produce extremely porous carbon particles whose internal surface area is very large (500 to 1,400 square meters per gram of carbon). This porous structure attracts and holds (adsorbs) organic molecules as well as certain metal and inorganic molecules.

Adsorption occurs because: (1) the contaminant has a low solubility in the waste, (2) the contaminant has a greater affinity for the carbon than for the waste, or (3) a combination of the two. The amount of contaminants that can be adsorbed by activated carbon ranges from 0.10 to 0.15 gram per gram of carbon.

Once the carbon bed is spent and can no longer remove contaminants from the waste, it is taken off-line. The activated carbon is then either regenerated by thermal or chemical methods for further use or treated by incineration and disposed of. If carbon adsorption is used to treat very toxic or hazardous materials, the spent carbon generally is incinerated and disposed of directly.

Regeneration is accomplished thermally by heating the carbon to a temperature (between 1,500 and 1,700°F) at which most of the adsorbed contaminants are volatilized and destroyed but which is not high enough to burn the surface of the carbon. About 4 to 9 percent of the carbon is lost in this process. Steam can also be used to regenerate carbon by volatilizing adsorbed organics for subsequent condensation, recovery and reuse or for treatment and disposal. Chemical regeneration involves the use of an acid, alkali, or organic solvent to redissolve contaminants for subsequent recovery and reuse or for further treatment and disposal. There is a loss of performance with each regeneration of spent carbon because metals (such as calcium, magnesium, and iron), plug small pores in the carbon and prevent some organic contaminants from being desorbed at the thermal regeneration temperature. In each thermal regeneration process, some carbon becomes spent, requiring treatment and disposal. As a result, makeup carbon has to be added to the regenerated carbon being placed back in service.

The number of times that the carbon can be regenerated is determined by the extent of its physical erosion and the loss of its adsorptive

capacity. Isotherm tests can be used on the regenerated carbon to determine adsorptive capacity; such tests can thus aid in predicting the number of times the carbon can be regenerated.

18.3 Description of Carbon Adsorption Process

In GAC systems, the carbon is packed in a column and the wastewater is passed through the carbon bed(s). The flow can be either down or up through the vertical column(s). Figure 18-1 shows two carbon adsorption systems. In the carbon adsorption process, the wastewater is passed through a stationary bed of carbon. The contaminants in the wastewater are adsorbed most rapidly and effectively by the upper layers of carbon during the initial stages of operation. These upper layers are in contact with the wastewater at its highest concentrations of contaminants. The small amounts of the contaminants that are not adsorbed in the first few layers of the activated carbon bed are removed from solution in the lower or downstream portion of the bed. Initially, none of the contaminants escapes from the carbon bed.

As the wastewater flows down the column (or the location in the column where the majority of adsorption is occurring), and the adsorption capacity is reached in the top layers, the adsorption zone moves down the column. As the adsorption zone approaches the end of the carbon bed, the concentration in the effluent rapidly approaches the influent concentration. This point in the process is referred to as breakthrough. A breakthrough curve (Figure 18-2) shows the plot of the

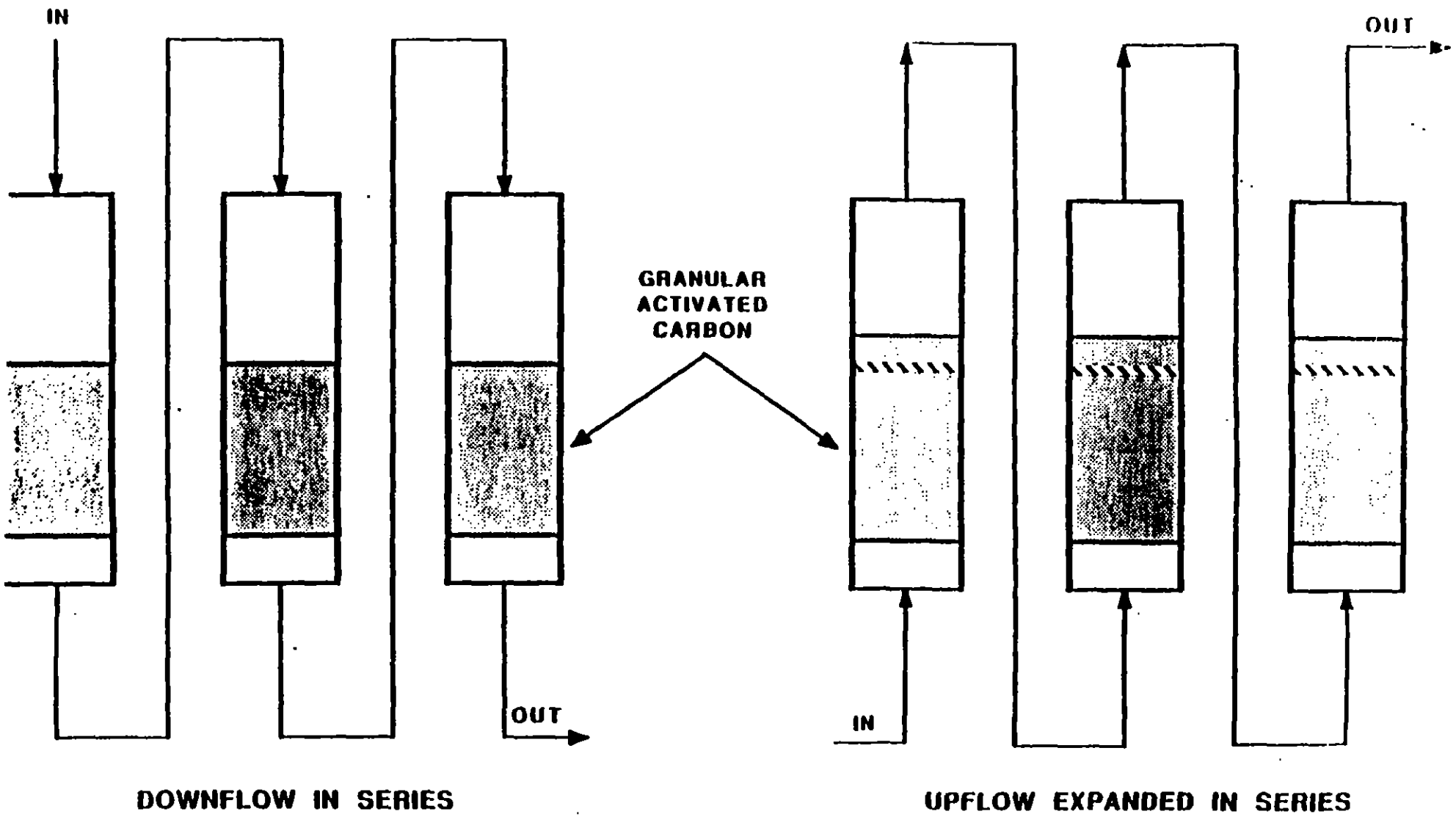

CARBON ADSORPTION

FIGURE 18-1

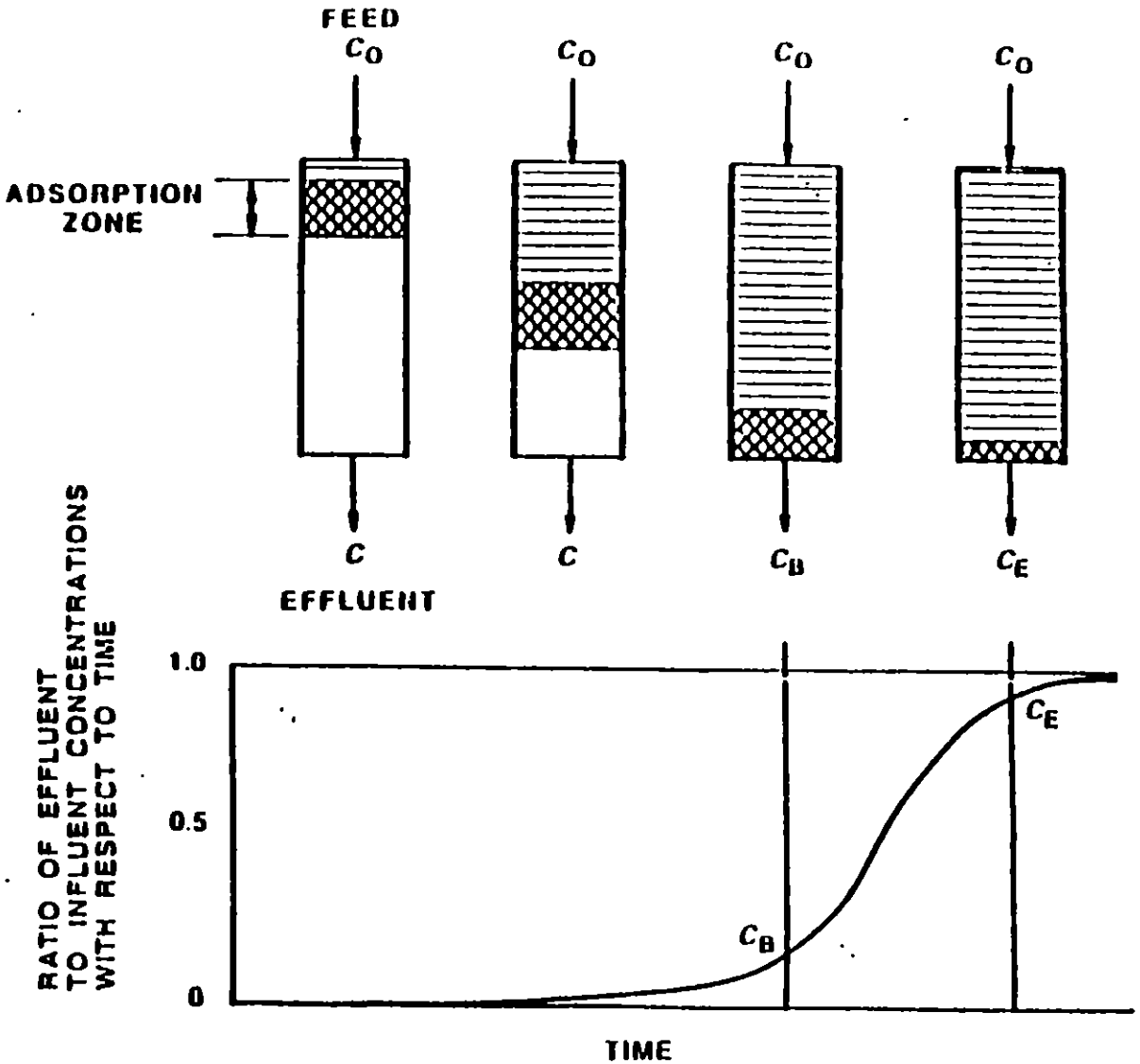

FIGURE 16-2 PLOT OF BREAKTHROUGH CURVE

ratio of effluent to influent concentrations versus time of process operation. At breakthrough, the adsorptive capacity of the carbon bed is exhausted, and little additional removal of contaminants occurs. Treated wastewater is then either treated further in another carbon adsorption column, if necessary, or disposed of.

18.4 Waste Characteristics Affecting Performance (WCAPs)

In determining whether carbon adsorption will achieve the same level of performance on an untested waste as on a previously tested waste and whether performance levels can be transferred, EPA examines the following waste characteristics: (a) the type and concentration of adsorbable contaminants and (b) the concentrations of suspended solids and oil and grease.

18.4.1 Type and Concentration of Adsorbable Contaminants

The concentration of adsorbable contaminants is a measure of the fraction of the wastewater constituents that can be expected to be adsorbed by a carbon adsorption column. Concentrations of organics in the wastewater greater than about 1,000 mg/l results in excessive activated carbon consumption requiring frequent regeneration.

While all organics can be adsorbed to some degree, activated carbon has a greater affinity for aromatic rather than for aliphatic compounds and for nonpolar rather than for polar compounds. If the type and concentration of adsorbable contaminants in an untested waste are significantly less adsorbable and higher, respectively, than in the tested waste, the system may not achieve the same performance.

18.4.2 Concentrations of Suspended Solids and Oil and Grease

Suspended solids and oil and grease can reduce the effectiveness of carbon adsorption by clogging and coating the pores, as well as by competing for adsorption sites, thereby interfering with the treatment of contaminants of concern.

18.5 Design and Operating Parameters

In assessing the effectiveness of the design and operation of a carbon adsorption system, EPA examines the following parameters: (a) the type and pore size of the carbon particles, (b) the adsorption temperature, (c) the pH, and (d) the hydraulic loading rate.

18.5.1 Type and Pore Size of Carbon Particles

Activated carbon is made from a variety of substances (e.g., coal, wood), ground to many different sizes, and manufactured with a number of different pore sizes. The pore size determines the surface area available for adsorption and, hence, the carbon's adsorptive capacity. The type and pore size of carbon particles exhibit different adsorptive capacities for different contaminants. Another property that is important in assessing the effectiveness of carbon particles is the iodine number; this value is an indicator of the adsorptive capacity for low molecular weight organics. Laboratory bench testing is used to determine the most effective type and pore size of carbon particles for treating particular wastewaters. EPA examines the type and pore size of the carbon particles used to ensure that effective adsorption is achieved.

18.5.2 Temperature

As the temperature increases, the solubility of the contaminants generally increases as well, which results in less effective adsorption. EPA monitors the temperature continuously, if possible, to ensure that the system is operating at the appropriate design condition and to diagnose operational problems.

18.5.3 pH

The pH impacts both the solubility of the various contaminants and the potential for chemical bonding to occur. EPA monitors the pH continuously, if possible, to ensure that the system is operating at the appropriate design conditions to diagnose operational problems.

18.5.4 Hydraulic Loading Rate

The amount of time that the waste contaminants are in contact with the carbon particles (i.e., residence time) impacts the extent to which adsorption occurs. Higher residence times generally improve adsorption performance but require longer carbon beds to maintain the same overall through-put. Typical residence times for GAC adsorption systems range from 30 to 100 minutes. For a given size carbon bed, the residence time can be determined by the hydraulic loading rate. Typical hydraulic loading rates for downflow adsorption systems range from 0.5 to 8.0 gal/min-ft^2, while upflow systems typically operate around 15 gal/min-ft^2. EPA monitors the hydraulic loading rate to ensure that sufficient time is provided to effectively adsorb contaminants.

18.6 References

Authur D. Little, Inc. 1977. Physical, chemical and biological treatment techniques for industrial wastes, Vol. I - NTIS, PB275-054. pp. 1-1 to 1-18 and 1-37 to 1-41.

DeJohn, P. B. 1975. Carbon from lignite or coal: which is better? Chemical Engineering. 28 April. Eckenfelder, W., et al. 1985. Wastewater Treatment Chemical Engineering. 2 September.

GCA Corp. 1984. Technical assessment of treatment alternatives for wastes containing halogenated organics. Prepared For USEPA, Contract 68-01-6871, October. pp. 150-160.

Metcalf and Eddy, Inc. 1985. Briefing: technologies applicable to hazardous waste - Prepared For USEPA ORD/HWERL. Section 2.13.

Patterson, J. W. 1985. Industrial wastewater treatment technology, 2nd ed., Butterworth Publishers. pp. 329-340.

Touhill, Shuckrow & Assoc. 1981. Concentration technologies for hazardous aqueous waste treatment - NTIS, PB81-150583. pp. 53-55. February.

USEPA 1973. Process design manual for carbon adsorption - NTIS, PB227-157, October. pp. 3-21 and 53.

USEPA 1986. Best Demonstrated Available Technology (BDAT) Background Document For F001-F005 Spent Solvents, Vol. 1, EPA/530-SW-86-056, November. p. 4-4. Washington, D.C. 20460. U.S. Environmental Protection Agency

Versar 1985. Versar, Inc. An Overview of Carbon Adsorption. Draft Final Report. U.S. Environmental Protection Agency: Exposure Evaluation Division Office of Toxic Substances. Washington, D.C. EPA Contract No. 68-02-3968, Task No. 58.

19. CHEMICAL OXIDATION

19.1 Applicability

Chemical oxidation is a treatment technology used to treat wastes containing organics. In addition, it is used to treat sulfide wastes by converting the sulfide to sulfate. Also, the destruction of cyanides in wastes can be accomplished by chemical oxidation.

Chemical oxidation of cyanide is applicable for dissolved cyanides in aqueous solutions, such as wastewaters from metal plating and finishing operations, or for inorganic sludges from these operations that contain soluble cyanide compounds. Chemical oxidation is most applicable to cyanides that are in a form that can be easily disassociated in water to yield free cyanide ions. If the cyanide is present in water as a tightly bound complex ion (e.g., ferrocyanide), only limited treatment may occur.

Chemical oxidation may also be used in treatment of complexed metal wastes. Organic compounds such as EDTA, NTA, citric acid, glutaric acid, lactic acid, and tartrates are often used as chelating agents to prevent metal ions from precipitating out in electroless plating solutions. When these spent plating solutions require treatment for metals removal by chemical precipitation, the organic chelating agents must first be destroyed. Chemical oxidants, potassium permanganate in particular, are effective in releasing metals from complexes with these organic compounds (Schroeter and Painter 1987).

19.2 Underlying Principles of Operation

The basic principle of chemical oxidation is that inorganic cyanides, some dissolved organic compounds, and sulfides can be chemically oxidized to yield carbon dioxide, water, salts, simple organic acids, and, in the case of sulfides, sulfates. The principal chemical oxidants used are hypochlorite, chlorine gas, chlorine dioxide, hydrogen peroxide, ozone, and potassium permanganate. The reaction chemistry for each is discussed below.

19.2.1 Oxidation with Hypochlorite or Chlorine (Alkaline Chlorination)

This type of oxidation is carried out using sodium hypochlorite (NaOCl), calcium hypochlorite ($Ca(OCl)_2$), chlorine gas (Cl_2), or sometimes chlorine dioxide gas (ClO_2). The reactions are normally conducted under slightly or moderately alkaline conditions. Alkaline chlorination of cyanide is a two-step process usually operated at a pH of 10 to 11.5 for the first step and 8.5 for the second step. The toxic gas cyanogen chloride (CNCl) is formed as a reaction intermediate in the first step of this process and may be liberated if the pH is less than 10 and incomplete reaction occurs. Example reactions for the oxidation of cyanide, phenol, and sulfide using sodium hypochlorite are shown below:

Cyanide: $CN^- + NaOCl \rightarrow OCN^- + NaCl$ (Step 1)

$2OCN^- + 3NaOCl \rightarrow CO_3^{2-} + CO_2 + N_2 + 3NaCl$ (Step 2)

Phenol: $C_6H_5OH + 14NaOCl \rightarrow 6CO_2 + 3H_2O + 14NaCl$

Sulfide: $S^= + 4NaOCl \rightarrow SO_4^= + 4NaCl$

Chlorine dioxide also oxidizes the same pollutants under identical conditions. Chlorine dioxide first hydrolyzes to form a mixture of chlorous ($HClO_2$) and chloric ($HClO_3$) acids. These acids act as the oxidants, as shown in the equations below, for phenol:

$$2ClO_2 + H_2O \rightarrow HClO_2 + HClO_3$$

$$C_6H_5OH + 7HClO_2 \rightarrow 6CO_2 + 3H_2O + 7HCl$$

$$3C_6H_5OH + 14HClO_3 \rightarrow 8CO_2 + 9H_2O + 14HCl$$

19.2.2 Peroxide Oxidation

Peroxide oxidizes the same constituents that alkaline chlorination oxidizes under similar conditions. The relevant reactions are:

Cyanide: $2CN^- + 5H_2O_2 \rightarrow 2CO_2 + N_2 + 4H_2O + 2OH^-$

Phenol: $C_6H_5OH + 14H_2O_2 \rightarrow 6CO_2 + 17H_2O$

Sulfide: $S^= + 4H_2O_2 \rightarrow SO_4^= + 4H_2O$

19.2.3 Oxidation with Ozone (Ozonation)

Ozone is an effective oxidizing agent for treatment of organic compounds and for the oxidation of cyanide to cyanate. Cyanogen gas (C_2N_2) is a reaction intermediate in this reaction. Further oxidation of cyanate to carbon dioxide and nitrogen compounds (N_2 or NH_3) occurs slowly with ozone. The oxidation of cyanide to cyanate proceeds by the following reaction:

$$CN^- + O_3 \rightarrow CNO^- + O_2$$

The rates of ozonation reactions can be accelerated by supplying ultraviolet (UV) radiation during treatment. Some literature sources indicate that even the most difficult cyanide complexes to treat, the iron-cyanide complexes, can be oxidized completely.

19.2.4 Oxidation with Potassium Permanganate

Potassium permanganate can also be used to oxidize the same constituents as the other chemical oxidants. The reactions of potassium permanganate with phenol and sulfide at acidic pHs and with cyanide at pH 12 to 14 are as follows:

Phenol: $3C_6H_5OH + 28KMnO_4 + 28H^+ \rightarrow 18CO_2 + 28MnO_2 + 23H_2O + 28K^+$

Sulfide: $5S^= + 8KMnO_4 + 24H^+ \rightarrow 5SO_4^= + 8Mn^{+2} + 12H_2O + 8K^+$

Cyanide: $CN^- + 2KMnO_4 + Ca(OH)_2 \rightarrow CNO^- + K_2MnO_4 + CaMnO_4 + H_2O$

In cyanide oxidation using potassium permanganate, cyanide is oxidized only to cyanate. Further oxidation of cyanate can be accomplished by acid hydrolysis or by the use of another oxidizing agent.

19.2.5 SO_2/Air Oxidation

Cyanide can be oxidized to cyanate in an aqueous solution by bubbling air containing from 1 to 10 percent SO_2 through the waste. The SO_2 is also oxidized to sulfate in this reaction. This treatment process occurs by the following reaction:

$$CN^- + SO_2 + O_2 + H_2O \rightarrow CNO^- + H_2SO_4$$

This oxidation reaction requires the use of a soluble copper salt catalyst. Copper sulfate ($CuSO_4$) is most often used. SO_2/air oxidation is used frequently in the treatment of wastewaters from gold production, which contain both cyanide and thiocyanate, because SO_2/air oxidizes cyanide more strongly than thiocyanate while alkaline chlorination and other common oxidizing agents oxidize thiocyanate more strongly than cyanide. As with potassium permanganate, further oxidation of cyanate can be accomplished by acid hydrolysis or by the use of another oxidizing agent.

19.3 Description of Chemical Oxidation Processes

19.3.1 Alkaline Chlorination

Alkaline chlorination can be accomplished by either batch or continuous processes. For batch treatment, the wastewater is transferred to a reaction tank, where the pH is adjusted and the oxidizing agent is added. In some cases, the tank may be heated to increase the reaction rate. For oxidation of most compounds, a slightly to moderately alkaline pH is used. It is important that the tank be well mixed for effective treatment to occur. After treatment, the wastewater is either directly discharged or transferred to another process for further treatment.

In the continuous process, automatic instrumentation is used to control pH, reagent addition, and temperature. An oxidation-reduction potential (ORP) sensor is usually used to measure the extent of reaction.

In both types of processes, agitation is typically provided to maintain thorough mixing. Typical residence times for these and other oxidation processes range from 1 to 2 hours.

19.3.2 Peroxide Oxidation

The peroxide oxidation process is run under similar conditions, and with similar equipment, to those used in the alkaline chlorination process. Hydrogen peroxide is added as a liquid solution.

19.3.3 Ozonation

Ozonation can be conducted in a batch or continuous process. The ozone for treatment is produced onsite because of the hazards of transporting and storing ozone as well as its short shelf life. The ozone gas is supplied to the reaction vessels by injection into the wastewater. The batch process uses a single reaction tank. As with alkaline chlorination, the amount of ozone added and the reaction time used are determined by the type and concentration of the oxidizable contaminants, and vigorous mixing should be provided for complete oxidation.

In continuous operation, two separate tanks may be used for reaction. The first tank receives an excess dosage of ozone. Any excess ozone remaining at the outlet of the second tank is recycled to the first tank, thus ensuring that an excess of ozone is maintained and also that no ozone is released to the atmosphere. As with alkaline chlorination, an ORP control system is usually necessary to ensure that sufficient ozone is being added.

19.3.4 Permanganate Oxidation

Permanganate oxidation is conducted in tanks in a manner similar to that used for alkaline chlorination, as discussed previously. Potassium

permanganate is normally dissolved in an auxiliary tank and added as a solution. As with the other oxidizing agents, ORP (for continuous processes) and excess oxidizing agent (for batch processes) are monitored to measure the extent of reaction.

19.3.5 SO_2/Air Oxidation

SO_2/air oxidation of cyanide depends on efficient mixing of air with the waste to ensure an adequate supply of oxygen. Because of this factor, the equipment requirements for this process are similar to those of ozonation. SO_2 is sometimes supplied with the air by using flue gas containing SO_2 as the air source. Otherwise, sulfur in the +4 oxidation state can be fed as gaseous sulfur dioxide (SO_2), liquid sulfurous acid (H_2SO_3), sodium sulfite (Na_2SO_3) solution, or sodium bisulfite ($NaHSO_3$) solution. Sodium bisulfite solution, made by dissolving sodium metabisulfite ($Na_2S_2O_5$) in water, is the most frequently used source of SO_2. This process is usually run continuously, with the addition of oxidizing agent and acid/alkali being controlled through continuous monitoring of ORP and pH, respectively.

19.4 <u>Waste Characteristics Affecting Performance (WCAPs)</u>

In determining whether chemical oxidation will achieve the same level of performance on an untested waste as on a previously tested waste and whether performance levels can be transferred, EPA examines the following waste characteristics: (a) the concentration of other oxidizable contaminants and (b) the concentration of metal salts.

19.4.1 Concentration of Other Oxidizable Compounds

The presence of other oxidizable compounds in addition to the BDAT constituents of concern will increase the demand for oxidizing agents and, hence, potentially reduce the effectiveness of the treatment process. As a surrogate for the amount of oxidizable organics present, EPA analyzes for total organic carbon (TOC) in the waste. Inorganic reducing compounds such as sulfide may also create a demand for additional oxidizing agent; EPA also attempts to identify and analyze for these constituents. If TOC and/or inorganic reducing compound concentrations in the untested waste are significantly higher than those in the tested waste, the system may not achieve the same performance. Additional oxidizing agent may be required to effectively oxidize the waste and achieve the same treatment performance, or other, more applicable treatment technologies may need to be considered for treatment of the untested waste.

19.4.2 Concentration of Metal Salts

Metal salts, especially lead and silver salts, will react with the oxidizing agent(s) to form metal peroxides, chlorides, hypochlorites, and/or chlorates. These reactions can cause an excessive consumption of oxidizing agents and potentially interfere with the effectiveness of treatment.

An additional problem with metals in cyanide solutions is that metal-cyanide complexes are sometimes formed. These complexes are negatively charged metal-cyanide ions that are extremely soluble.

Cyanide in the complexed form may not be oxidizable, depending on the strength of the metal-cyanide bond in the complex and the type of oxidizing agent used. Iron complexes (for example, the ferrocyanide ion, $Fe(CN)_6^{-4}$) are the most stable of the complexed cyanides.

If the concentrations of metal salts and/or metal-cyanide complexes in the untested waste are significantly higher than those in the tested waste, the system may not achieve the same performance. Additional oxidizing agent and/or a different oxidizing agent may be required to effectively oxidize the waste and achieve the same treatment performance, or other, more applicable treatment technologies may need to be considered for treatment of the untested waste.

19.5 Design and Operating Parameters

In assessing the effectiveness of the design and operation of a chemical oxidation system, EPA examines the following parameters: (a) the residence time, (b) the amount and type of oxidizing agent, (c) the degree of mixing, (d) the pH, (e) the oxidation temperature, and (f) the amount and type of catalyst.

19.5.1 Residence Time

The residence time impacts the extent of volatilization of waste contaminants. For a batch system, the residence time is controlled by adjusting the treatment time in the reaction tank. For a continuous system, the waste feed rate is controlled to make sure that the system is operated at the appropriate design residence time. EPA monitors the residence time to ensure that sufficient time is provided to effectively oxidize the waste.

19.5.2 Amount and Type of Oxidizing Agent

Several factors influence the choice of oxidizing agents and the amount to be added. The amount of oxidizing agent required to treat a given amount of oxidizable constituent(s) will vary with the agent chosen. Enough oxidant must be added to ensure complete oxidation; the specific amount will depend on the type of oxidizable compounds in the waste and the chemistry of the oxidation reactions. Theoretically, the amount of oxidizing agent to be added can be computed from oxidation reaction stoichiometry; in practice, an excess of oxidant should be used. Testing for excess oxidizing agent will determine whether the reaction has reached completion. In continuous processes, the addition of oxidizing agent is accomplished by automated feed methods. The amount of oxidizing agent needed is usually measured and controlled automatically by an oxidation-reduction potential (ORP) sensor. EPA examines the amount of oxidant added to the chemical oxidation system to ensure that it is sufficient to effectively oxidize the waste and, for continuous processes, examines how the facility ensures that the particular addition rate is maintained. EPA also tests for excess oxidizing agent for batch processes and continuously monitors the ORP for continuous processes to ensure that excess oxidizing agent, if possible, is supplied.

19.5.3 Degree of Mixing

Process tanks must be equipped with mixers to ensure maximum contact between the oxidizing agent and the waste solution. Proper mixing also

limits the production of any solid precipitates from side reactions that may resist oxidation. Mixing also provides an even distribution of tank contents and a homogeneous pH throughout the waste, improving oxidation of wastewater constituents. The quantifiable degree of mixing is a complex assessment that includes, among other things, the amount of energy supplied, the length of time the material is mixed, and the related turbulence effects of the specific size and shape of the tank. This is beyond the scope of simple measurement. EPA, however, evaluates the degree of mixing qualitatively by considering whether mixing is provided and whether the type of mixing device is one that could be expected to achieve uniform mixing of the waste solution.

19.5.4 pH

Operation at the optimal pH maximizes the chemical oxidation reactions and may, depending on the oxidizing agent being used, limit the formation of undesirable reaction byproducts or the escape of cyanide from solution as HCN, CNCl, or C_2N_2 gas. The pH is controlled by the addition of caustic, lime, or acid to the solution. In most cases, a slightly or moderately alkaline pH is used, depending on the type of oxidizing agent being used and the compound being treated (see Section 19.2, Underlying Principles of Operation). In alkaline chlorination treatment of organics, a slightly acidic pH may be selected as an optimum. In permanganate oxidation, a pH of 2 to 4 is often selected. EPA monitors the pH continuously, if possible, to ensure that the system is operating at the appropriate design condition and to diagnose operational problems.

19.5.5 Oxidation Temperature

Temperature affects the rate of reaction and the solubility of the oxidizing agent in the waste. As the temperature is increased the solubility of the oxidizing agent, in most instances, is increased and the required residence time, in most cases, is reduced. EPA monitors the oxidation temperature continuously, if possible, to ensure that the system is operating at the appropriate design condition and to diagnose operational problems.

19.5.6 Amount and Type of Catalyst

Adding a catalyst that promotes oxygen transfer and thus enhances oxidation has the effect of lowering the necessary reactor temperature and/or improving the level of destruction of oxidizable compounds. For waste constituents that are more difficult to oxidize, catalyst addition may be necessary to effectively destroy the constituent(s) of concern. Catalysts typically used for this purpose include copper bromide and copper nitrate. If a catalyst is required, EPA examines the amount and type added, as well as the method of addition of the catalyst to the waste, to ensure that effective oxidation is achieved.

19.6 References

Gurnham, C.F. 1985. Principles of industrial waste treatment. New York: John Wiley and Sons.

Gurol, M.D., and Holden, T.E. 1988. The effect of copper and iron complexation on removal of cyanide by ozone. Ind. Eng. Chem. Res. 27(7):1157-1162.

McGraw-Hill. 1982. Encyclopedia of science and technology. Vol. 3, p. 825. New York: McGraw-Hill Book Co.

Metcalf & Eddy, Inc. 1986. Briefing: Technologies applicable to hazardous waste. Prepared for U.S. Environmental Protection Agency, Hazardous Waste Engineering Research Laboratory. Cincinnati, Ohio: U.S. Environmental Protection Agency.

Nutt, S.G., and Zaidi, S.A. 1983. Treatment of cyanide-containing wastewaters by the copper-catalyzed SO_2/air oxidation process. In Proceedings of the 38th Industrial Waste Conference, Purdue University, West Lafayette, Indiana. May 10-12, 1983, Stoneham, Mass.: Butterworth Publishers.

Patterson, J.W. 1985. Industrial wastewater treatment technology, 2nd ed. Stoneham, Mass.: Butterworth Publishers.

Schroeter, J., and Painter, C. 1987. Potassium permanganate oxidation of electroless plating wastewater. Carus Chemical Company, 1001 Boyce Memorial Drive, P.O. Box 1500, Ottawa, Illinois 61350.

Weast, R.C., ed. 1978. Handbook of chemistry and physics. 58th ed. Cleveland, Ohio: CRC Press.

20. POLISHING FILTRATION

20.1 Applicability

Polishing filtration is a treatment technology applicable to wastewaters containing relatively low concentrations of solids (less than 1,000 mg/l). This type of filtration is typically used as a polishing step for the supernatant liquid following chemical precipitation and settling/clarification of wastewaters containing metal and other inorganic precipitates. Polishing filtration removes particles that are difficult to settle because of their shape and/or density, as well as precipitated particles from an underdesigned settling system.

20.2 Underlying Principles of Operation

The basic principle of operation for polishing filtration is the removal of particles from a mixture of fluid and particles by a medium that permits the flow of the fluid but retains the particles. The larger the particles, the easier they are to remove from the fluid.

Extremely small particles, in the colloidal range, may not be removed effectively in a polishing filtration system and thus may appear in the treated wastewater. To mitigate this problem, the wastewater can be treated prior to filtration to modify the particle size distribution in favor of the larger particles by using appropriate precipitants, coagulants, flocculants, and filter aids. The selection of the appropriate precipitant and coagulant is important because they affect the type of waste particles formed. For example, lime precipitation usually produces larger, less gelatinous particles (which are easier to

remove from aqueous wastes using this technology) than does caustic soda precipitation. For particles that become too small to remove effectively because of poor resistance to shearing, the use of coagulants and flocculants both improves shear resistance and increases the size of the particles. Also, if pumps are used, shear can be minimized by lowering the pump speed or using a low-shear type of pump. Filter aids such as diatomaceous earth are used to precoat cloth-type filter media and to provide an initial filter cake onto which additional solids can be deposited during the filtration process. The presence of the precoat aids in the removal of small particles from the solution being filtered. These particles adhere to the precoat solids during the filtration process.

20.3 Description of Polishing Filtration Processes

During polishing filtration, wastewater may flow by gravity or under pressure to the filter. The two most common polishing filtration processes are cartridge and granular bed filtration. Both processes remove particles that are much smaller than the pore size of the filter media by straining, adsorption, and coagulation/flocculation mechanisms; they are also capable of producing an effluent with a low level of solids (less than 10 mg/l).

20.3.1 Cartridge Filtration

Cartridge filters can be used for relatively low waste feed flows. In this process, a cylindrically shaped cartridge with a matted cloth-type filter medium, is placed within a sealed vessel. Wastewater

is pumped through the cartridge until the flow drops excessively or until the pumping pressure becomes too high because of plugging of the filter media. The sealed vessel is then opened and the plugged cartridge is removed and replaced with a new cartridge. The plugged cartridge is then disposed of. Cartridge filters may be assembled in a parallel arrangement to increase the overall system flow.

20.3.2 Granular Bed Filtration

For relatively large volume flows, granulated media such as sand or anthracite coal are used singly or in combination to trap suspended solids within the pore spaces of the media. Dual and multimedia filter arrangements allow higher flow rates and efficiencies. Typical hydraulic loading rates range from 2 to 5 gal/sq ft-min for single-medium filters and from 4 to 8 gal/sq ft-min for multimedia filters.

In this process, wastewater is either gravity fed or pumped through the granular bed media and filtered until either the flow drops excessively or the pumping pressure becomes too high because of plugging of the filter media. Granular media filters are cleaned by backwashing with filtered water in an upflow manner to expand the bed, loosen the media granules, and resuspend the entrapped filtered solids. The backwash water, which may be as much as 10 percent of the volume of the filtered wastewater, is then returned to the wastewater treatment system so that the filtered solids in the backwash water can be settled out of solution prior to discharge.

20.4 Waste Characteristics Affecting Performance (WCAPs).

In determining whether polishing filtration will achieve the same level of performance on an untested waste as on a previously tested waste and whether performance levels can be transferred, EPA examines the following waste characteristics: (a) the solid waste particle size and (b) the type of solid waste particles.

20.4.1 Solid Waste Particle Size

Extremely small particles, in the colloidal range, may not be filtered effectively in a polishing filter and thus may appear in the filtrate. If the solid waste particle size distribution of an untested waste is significantly lower than that of the tested waste, the system may not achieve the same performance. Pretreatment of the waste with coagulants and flocculants may be required to increase the particle sizes and achieve the same treatment performance, or other, more applicable treatment technologies may need to be considered for treatment of the untested waste.

20.4.2 Type of Solid Waste Particles

Some solids formed during metal precipitation are gelatinous in nature and are difficult to filter. In most cases, solids can be made less gelatinous by use of the appropriate coagulants and coagulant dosage prior to settling/clarification, or after settling/clarification but prior to filtration. In addition, the use of lime instead of caustic in chemical precipitation of metals reduces the formation of gelatinous solids. If solids in an untested waste are significantly more gelatinous

than in the tested waste, the system may not achieve the same performance. Pretreatment of the waste with coagulants may be required to decrease the gelatinous nature of the waste and achieve the same treatment performance, or other, more applicable treatment technologies may need to be considered for treatment of the untested waste.

20.5 Design and Operating Parameters

In assessing the effectiveness of the design and operation of a polishing filtration system, EPA examines the following parameters: (a) the type and size of the filter; (b) the filtration pressure; (c) the amount and type of coagulants, flocculants, and filter aids used; (d) the hydraulic loading rate; and (e) the pore size of the filter media.

20.5.1 Type and Size of Filter

The type and size of the polishing filtration system used is dependent on the nature of the particles to be removed, the desired solids concentration in the filtrate, and the amount and concentration of solids in the feed. As noted earlier, cartridge filtration is limited to lower volume wastewaters and/or those with lower solids concentrations than is granular bed filtration. For granular bed filtration, when more than one medium is used (dual and multimedia filter arrangements such as sand and anthracite coal), a higher capacity can be expected for the same size filter bed. For both filtration processes, the larger the filter size, the greater its hydraulic capacity (overall throughput) and the longer the filter runs between solids removal. EPA examines the type and size of the filter chosen to ensure that it is capable of achieving effective filtration of the wastewater.

20.5.2 Filtration Pressure

Pressure impacts both the design pore size of the filter media and the design feed flow rate (hydraulic loading rate). The higher the feed pressure, the longer the run will be prior to solids removal. For gelatinous solids, such as metal hydroxides, however, excessive pressure may cause the solids to clog the filter pores and prevent additional polishing filtration. Also, high pressures may force particles through the filter medium, resulting in ineffective filtration. EPA monitors the filtration pressure applied to the waste feed continuously, if possible, to ensure that the system is operating at the appropriate design condition and to diagnose operational problems.

20.5.3 Amount and Type of Coagulants, Flocculants, and Filter Aids

Coagulants, flocculants, and filter aids may be mixed with the wastewater prior to filtration. Coagulants and flocculants affect the type and size of waste particles in the wastewater and, hence, their ease of removal. Filter aids both improve the effectiveness of filtering gelatinous particles and increase the time that the filter can stay on-line by increasing the surface area available for filtration. Coagulants, flocculants, and filter aids are particularly useful when the wastewater contains a high percentage of very small particles and/or when the concentration of solids in the wastewater is low. Inorganic coagulants include alum, ferric sulfate, and lime; organic flocculants are polyelectrolytes. Diatomaceous earth is the most commonly used filter aid. The use of coagulants, flocculants, and filter aids

significantly increases the amount of solids requiring removal and disposal. Polyelectrolyte flocculant usage, however, usually does not increase the solids volume significantly because the required dosage is relatively low. If the addition of coagulants, flocculants, and filter aids is required, EPA examines the amount and type added, as well as their method of addition to the wastewater, to ensure effective filtration.

20.5.4 Hydraulic Loading Rate

Lower hydraulic loading rates generally improve filtration performance. Higher hydraulic loading rates yield greater throughput, but result in shorter cycle times. EPA monitors the hydraulic loading rate to ensure effective filtration of the wastewater.

20.5.5 Pore Size of the Filter Media

The pore size of the filter media determines the particle size that will be effectively removed from the wastewater. EPA examines the pore size of the filter media to ensure effective filtration of the wastewater.

20.6 References

Anonymous. 1985. Feature report. Wastewater treatment. Chemical Engineering, 92(18):71-72.

Crain, R.W. 1981. Solids removal and concentration. In Third Conference on Advanced Pollution Control for the Metal Finishing Industry. pp. 56-62. Cincinnati, Ohio: U.S. Environmental Protection Agency.

Kirk-Othmer. 1980. Encyclopedia of chemical technology. 3rd ed., Vol. 10. New York: John Wiley and Sons.

Perry, R.H. and Chilton, C.H. 1973. Chemical engineers' handbook. 5th ed. pp. 19-57. New York: McGraw Hill Book Co.

Shucosky, A.C. 1988. Feature report. Filtration. Chemical engineering. January 18, 1988.

21. SLUDGE FILTRATION

21.1 Applicability

Sludge filtration, also known as sludge dewatering or cake-formation filtration, is a technology used on wastes that contain high concentrations of suspended solids, generally higher than 1 percent (10,000 mg/l). Sludge filtration is commonly applied to waste sludges, such as clarifier solids, for dewatering. These sludges can be dewatered to 20 to 50 percent solids concentration using this technology.

21.2 Underlying Principles of Operation

The basic principle of operation for sludge filtration is the separation of particles from a mixture of fluid and particles by a medium that permits the flow of the fluid but retains the particles. The larger the particles, the easier they are to separate from the fluid.

Extremely small particles, in the colloidal range, may not be filtered effectively in a sludge filtration system and may appear in the filtrate. To mitigate this problem, the waste can be treated prior to filtration to modify the particle size distribution in favor of the larger particles by using appropriate precipitants, coagulants, flocculants, and filter aids. The selection of the appropriate precipitant and coagulant is important because they affect the type of waste particles formed. For example, lime precipitation usually produces larger, less gelatinous particles (which are easier to separate from waste sludges using this technology) than caustic soda precipitation.

For particles that become too small to filter effectively because of poor resistance to shearing, the use of coagulants and flocculants improves shear resistance in addition to increasing the size of the particles. Also, if pumps are used, shear can be minimized by lowering the pump speed or using a low-shear type of pump. Filter aids such as diatomaceous earth are used to precoat cloth-type filter media and provide an initial filter cake onto which additional solids can be deposited during the filtration process. The presence of the precoat aids in the removal of small particles from the waste being filtered. These particles adhere to the precoat solids during the filtration process.

21.3 Description of Sludge Filtration Process

For sludge filtration, waste is pumped through a cloth-type filter medium (also known as pressure filtration, such as that performed with a plate and frame filter), drawn by vacuum through the cloth medium (also known as vacuum filtration, such as that performed with a vacuum drum filter), or gravity-drained and mechanically pressured through two continuous fabric belts (also known as belt filtration, such as that performed with a belt filter press). In all cases, the solids "cake" builds up on the filter medium and acts as a filter for subsequent solids removal. For a plate and frame type filter, removal of the solids is accomplished by taking the unit off-line, opening the filter, and using an adjustable knife mechanisms to scrape the solids off (a batch

process). For the vacuum filter, cake is removed continuously by using an adjustable knife mechanism to scrape scraping the sludge from the vacuum drum as the drum rotates. For the belt filter, the cake is continuously removed by a discharge roller and blade, which dislodge the cake from the belt. For a specific sludge, the plate and frame type filter will usually produce the driest cake (highest percentage of solids). The belt filter produces a drier cake than a vacuum filter, but not as dry as that produced by a plate and frame filter.

21.4 Waste Characteristics Affecting Performance (WCAPs)

In determining whether sludge filtration will achieve the same level of performance on an untested waste as on a previously tested waste and whether performance levels can be transferred, EPA examines the following waste characteristics: (a) the solid waste particle size and (b) the type of solid waste particles.

21.4.1 Solid Waste Particle Size

The smaller the particle size, the more the particles tend to go through the filter media. This is especially true for a vacuum filter. For a pressure filter (such as a plate and frame), smaller particles may require higher pressures for equivalent fluid throughput because the smaller pore spaces between particles collected on the filter medium create resistance to flow. If the solid waste particle size distribution of an untested waste is significantly lower than that of the tested waste, the system may not achieve the same performance. Pretreatment of

the waste with coagulants and flocculants may be required to increase the particle sizes and achieve the same treatment performance, or other, more applicable treatment technologies may need to be considered for treatment of the untested waste.

21.4.2 Type of Solid Waste Particles

Some solids formed during metal precipitation are gelatinous in nature and cannot be dewatered well by sludge filtration. In fact, for vacuum filtration a cake may not form at all. In most cases, solids can be made less gelatinous by use of the appropriate coagulants and coagulant dosage prior to settling/ clarification or after settling/ clarification but prior to filtration. In addition, the use of lime instead of caustic in chemical precipitation of metals reduces the formation of gelatinous solids. Also, adding filter aids, such as lime or diatomaceous earth, to a gelatinous sludge increases its filterability significantly. Finally, precoating the filter with diatomaceous earth prior to sludge filtration assists in dewatering gelatinous sludges. If an untested waste is significantly more gelatinous than the tested waste, the system may not achieve the same performance. Pretreatment of the waste with coagulants and filter aids or precoating of the filter may be required to decrease the gelatinous nature of the waste and achieve the same treatment performance, or other, more applicable treatment technologies may need to be considered for treatment of the untested waste.

21.5 Design and Operating Parameters

In assessing the effectiveness of the design and operation of a sludge filtration system, EPA examines the following parameters: (a) the type and size of filter; (b) the filtration pressure; (c) the amount and type of coagulants, flocculants, and filter aids used; and (d) the hydraulic loading rate.

21.5.1 Type and Size of Filter

The type and size of the filtration system used is dependent on the nature of the particles to be separated, the desired solids concentration in the cake, the amount and concentration of solids in the feed, and the required downtime for solids removal and maintenance. Typically, a pressure-type filter (such as a plate and frame) will yield a drier cake than a belt or vacuum type filter and will also be more tolerant of variations in influent sludge characteristics. Pressure-type filters, however, are batch processes. When cake is built up to the maximum depth physically possible (constrained by filter geometry) or to the maximum design pressure, the filtration system is taken off-line while the cake is removed. (An alternate unit can be put on-line while the other is being cleaned.) Belt and vacuum type filters are continuous systems (i.e., cake discharges continuously), but each of these filters is usually much larger than a pressure filter with the same capacity.

For all filter types, the larger the filter, the greater its hydraulic capacity (overall throughput) and, for pressure-type filters,

the longer the filter runs between cake discharges. EPA examines the type and size of the filter chosen to ensure that it is capable of achieving effective dewatering and filtration of the waste sludge.

21.5.2 Filtration Pressure

Pressure impacts both the design pore size of the filter media and the design feed flow rate. For plate and frame filters, the higher the feed pressure, the drier the cake will be and the longer the runs will be prior to cake discharge. However, for gelatinous solids, such as some metal hydroxides, excessive pressures may cause the solids to clog the filter pores and prevent additional sludge filtration. Also, high pressures may force particles through the filter medium, resulting in ineffective filtration. For vacuum filters, the maximum amount of vacuum typically applied ranges from 20 to 25 inches of mercury. (The absolute maximum amount of vacuum that can be applied is 29.9 inches of mercury, or atmospheric pressure.) For belt filters, neither pressure nor vacuum is applied to the waste feed (although mechanical pressure is applied). For plate and frame and vacuum-type filtration systems, EPA monitors the filtration pressure (or vacuum) applied to the waste feed continuously, if possible, to ensure that the system is operating at the appropriate design conditions and to diagnose operational problems.

21.5.3 Amount and Type of Coagulants, Flocculants, and Filter Aids

Coagulants, flocculants, and filter aids may be mixed with the waste feed prior to filtration. Coagulants and flocculants affect the type and

size of waste particles in the waste and, hence, their ease of removal. Their effect is particularly significant for vacuum filtration since they may make the difference between no cake and the formating of a relatively dry cake. In a pressure filter, coagulants, flocculants, and filter aids significantly improve overall throughput and cake dryness. Filter aids, such as diatomaceous earth, can be precoated on all filters for particularly difficult-to-filter sludges (those containing a high concentration of gelatinous solids). The precoat layer acts somewhat like a filter in that sludge solids are trapped in the precoat pore spaces. Coagulants, flocculants, and filter aids are particularly useful when the sludge has a high percentage of very small particles and/or when the concentration of solids in the waste feed is low. Inorganic coagulants include alum, ferric sulfate, and lime. Organic flocculants are polyelectrolytes. Diatomaceous earth is the most commonly used filter aid. The use of coagulants, flocculants, and filter aids significantly increases the amount of solids in the sludge requiring disposal, although, polyelectrolyte flocculant usage usually does not increase sludge volume significantly because the required dosage is relatively low. If the addition of coagulants, flocculants, and filter aids is required, EPA examines the amount and type added to the waste sludge, along with their method of addition, and to ensure effective dewatering and filtration.

21.5.4 Hydraulic Loading Rate

Lower hydraulic loading rates generally improve filtration performance. Higher hydraulic loading rates yield greater overall throughput, but result in the formation of wetter cakes (lower percent solids) and, for plate and frame filters, shorter cycle times. EPA monitors the hydraulic loading rate to ensure effective dewatering and filtration of the waste sludge.

21.6 References

Crain, R. W. 1981. Solids removal and concentration. In Third Conference on Advanced Pollution Control for the Metal Finishing Industry, pp. 56-62. Cincinnati, Ohio: U.S. Environmental Protection Agency.

Eckenfelder, W.W., Jr., Patoczka, J., and Watkins, A. 1985. Wastewater treatment, Chemical Engineering. September 2, 1985.

Kirk-Othmer. 1980. Encyclopedia of chemical technology. 3rd ed., Vol. 10. New York: John Wiley and Sons.

Perry, R. H., and Chilton, C. H. 1973. Chemical engineers'handbook. 5th ed., Section 19. New York: McGraw Hill Book Co.

22. THERMAL DRYING

22.1 Applicability

Thermal drying is a treatment technology applicable to solid wastes having a filterable solids content of approximately 40 percent or greater. Thermal drying removes water and volatile organics from a solid waste through evaporation. Thermal dryers operate in the range of 300 to 700°F and usually have mechanical agitation to improve heat transfer. Use of this technology results in a smaller volume of waste with reduced concentrations of water and volatile organics.

22.2 Underlying Principles of Operation

Drying involves the removal of a liquid from a solid waste by evaporation. Liquid constituents will vaporize as a result of heat absorbed. In any drying process, assuming an adequate supply of heat, the rate at which liquid evaporation occurs depends on the thermal conductivity of the solid waste to be dried and the boiling points of the volatile liquid constituents to be evaporated.

22.3 Description of Thermal Drying Process

A wide range of batch and continuous dryers is available. One commonly used continuous-type, the screw-flight dryer, is described below.

The screw-flight dryer consists of a hollow screw and shaft enclosed in a jacketed trough. Transfer fluid is heated to temperatures as high as 750°F and circulated, usually countercurrently, through the hollow screw and shaft. Heat transfers from the screw and shaft into the feed

material, causing water and organics to be driven off in a vapor form. The dried cake is discharged from the dryer.

The screw is designed to create good contact between the shaft and feed material. The screw is also equipped with breaker bars to ensure proper shearing of the input materials and to prevent the screw surfaces from fouling.

Vapors emerging from this system are managed in one of two ways, depending on their composition. If the vapors contain only water, they are directly vented to the atmosphere; however, if the vapors contain volatile organics, they are generally passed through a water-cooled condenser system. The recovered organic liquids from the condenser unit are then forwarded to another process for treatment or recovery.

22.4 Waste Characteristics Affecting Performance (WCAPs)

In determining whether thermal drying will achieve the same level of performance on an untested waste as on a previously tested waste and whether performance levels can be transferred, EPA examines the following waste characteristics: (a) the thermal conductivity of the waste and (b) the volatile liquid constituent boiling points.

22.4.1 Thermal Conductivity of the Waste

A major factor determining whether a particular constituent will volatilize is the transfer of heat through the waste. For thermal drying, heat transfer is accomplished by both convection and conduction.

EPA examined both methods of heat transfer and believes that conduction would be the primary cause of heat transfer differences between wastes. Heat flow by conduction is proportional to the temperature gradient across the material. The proportionality constant is referred to as the thermal conductivity and is a property of the material to be dried. With regard to convection, EPA believes that the amount of heat transferred by convection will generally be more a function of the system design than of the waste itself.

Thermal conductivity measurements, as part of a treatability comparison for two different wastes to be treated by a single dryer unit, are most meaningful when applied to wastes that are homogeneous (i.e., uniform throughout). As wastes exhibit greater degrees of nonhomogeneity, thermal conductivity becomes less accurate in predicting treatability because the measurement essentially reflects heat flow through regions having the greatest conductivity (i.e., the path of least resistance) and not heat flow through all parts of the waste. Nevertheless, EPA believes that thermal conductivity may provide the best measure of performance transfer. If the thermal conductivity of an untested waste is significantly lower than that of the tested waste, the system may not achieve the same performance and other, more applicable treatment technologies may need to be considered for treatment of the untested waste.

22.4.2 Volatile Liquid Constituent Boiling Points

The lower the boiling points of the volatile liquid constituents, the more easily they will be evaporated and the solid waste dried. If the boiling points of the volatile liquid constituents in the untested waste are significantly higher than those in the tested waste, the system may not achieve the same performance. More rigorous drying conditions including a higher temperature, lower pressure, and a longer residence time may be required to evaporate less volatile liquid constituents and achieve the same treatment performance, or other, more applicable treatment technologies may need to be considered for treatment of the untested waste.

22.5 Design and Operating Parameters

In assessing the effectiveness of the design and operation of a thermal drying system, EPA examines the following parameters: (a) the drying temperature and pressure and (b) the residence time.

22.5.1 Drying Temperature and Pressure

Temperature provides an indirect measure of the energy available (i.e., Btu/hr) to vaporize the waste constituents. As the design temperature increases, more constituents with decreasing volatilities will be removed from the waste.

Pressure is integrally related to the boiling point of the waste and the subsequent vaporization of the water and/or organic constituents. As the pressure is lowered below atmospheric (i.e., as vacuum is increased),

the boiling point of the waste will also be lowered, thereby requiring less heat input to volatilize waste constituents. EPA monitors the drying temperature as well as the pressure (if pressures other than atmospheric are used) to ensure that the system is operating at appropriate conditions and to diagnose operational problems.

22.5.2 Residence Time

The residence time determines the necessary energy input into the system. It is dependent on the dryer temperature and the thermal conductivity of the waste. EPA observes the residence time to ensure that the treatment system provides sufficient time to effectively evaporate the volatile liquid constituents and, hence, dry the solid waste.

22.6 References

Perry, R.H., and Chilton, C.H. 1973. Chemical engineers' handbook. 5th ed. New York: McGraw-Hill Book Co.

Risk Sciences International. 1987. Evaluation of treatment technologies for listed petroleum industry wastes. Interim Report. pp. 41-45.

23. WET AIR OXIDATION

23.1 Applicability

Wet air oxidation is a treatment technology applicable to wastewaters containing organics and oxidizable inorganics such as cyanide. The process is typically used to oxidize sewage sludge, regenerate spent activated carbon, and treat process wastewaters. Wastewaters treated using this technology include pesticide wastes, petrochemical process wastes, cyanide-containing metal finishing wastes, spent caustic wastewaters containing phenolic compounds, and some organic chemical production wastewaters.

This technology differs from other treatment technologies generally used to treat wastewaters containing organics in several ways. First, wet air oxidation can be used to treat wastewaters that have higher organic concentrations than are normally handled by biological treatment, carbon adsorption, and chemical oxidation, but may be too dilute to be effectively treated by thermal processes such as incineration. Wet air oxidation is most applicable for waste streams containing dissolved or suspended organics in the 500 to 15,000 mg/l range. Below 500 mg/l, the rates of wet air oxidation of most organic constituents are too slow for efficient application of this technology. For these more dilute waste streams, biological treatment, carbon adsorption, or chemical oxidation may be more applicable. For more concentrated waste streams (above 15,000 mg/l), thermal processes such as incineration may be more

applicable. Second, wet air oxidation can be applied to wastes that have significant concentrations of metals (roughly 2 percent), whereas biological treatment, carbon adsorption, and chemical oxidation may have difficulty in treating such wastes.

It is important to point out that wet air oxidation proceeds by a series of reaction steps and the intermediate products formed are not always as readily oxidized as are the original constituents. Therefore, the process does not always achieve complete oxidation of the organic constituents. Accordingly, in applying this technology it is important to assess potential products of incomplete oxidation to determine whether further treatment is necessary or whether this technology is appropriate at all.

Studies of the wet air oxidation of different compounds have led to the following empirical observations concerning a compound's susceptibility to wet air oxidation based on its chemical structure:

1. Aliphatic compounds, even with multiple halogen atoms, can be destroyed within conventional wet air oxidation conditions. Oxygenated compounds (such as low molecular weight alcohols, aldehydes, ketones, and carboxylic acids) are formed, but these compounds are readily biotreatable.

2. Aromatic hydrocarbons, such as toluene, acenaphthene, or pyrene, are easily oxidized.

3. Halogenated aromatic compounds can be oxidized provided there is at least one nonhalogen functional group present on the ring (e.g., pentachlorophenol (-OH) or 2,4,6-trichloroaniline ($-NH_2$)).

4. Halogenated aromatic compounds, such as 1,2-dichlorobenzene, and PCBs, such as Aroclor 1254, are resistant to wet air oxidation under conventional conditions.

5. Halogenated ring compounds, such as the pesticides aldrin, dieldrin, and endrin, are expected to be resistant to conventional wet air oxidation.

6. DDT can be oxidized, but results in the formation of intractable oils in conventional wet air oxidation.

7. Heterocyclic compounds containing oxygen, nitrogen, or sulfur are expected to be destroyed by wet air oxidation because the O, N, or S atoms provide a point of attack for oxidation reactions to occur.

23.2 Underlying Principles of Operation

The wet air oxidation of aqueous wastes occurs at high temperatures and pressures. The typical operating temperature for the treatment process ranges from 175 to 325°C (347 to 617°F). The pressure is maintained at a level high enough to prevent excessive evaporation of the liquid phase at the operating temperature, generally between 300 and 3000 psi. At these elevated temperatures and pressures, the solubility of oxygen in water is dramatically increased, thus providing a strong driving force for the oxidation. The reaction must take place in the aqueous phase because the chemical reactions involve both oxygen (oxidation) and water (hydrolysis). The wet air oxidation process for a specific organic compound generally involves a number of oxidation and hydrolysis reactions in series, which degrade the initial compound by steps into a series of compounds of simpler structure. Complete wet air oxidation results in the conversion of hazardous compounds into carbon dioxide, water vapor, ammonia (for nitrogen-containing wastes), sulfate (for sulfur-containing wastes), and halogen acids (for halogenated wastes).

However, treatable quantities of partial degradation products may remain in the treated wastewaters from wet air oxidation. Therefore, effluents from wet air oxidation processes may be given subsequent treatment including biological treatment, carbon adsorption, or chemical oxidation before being discharged.

23.3 Description of Wet Air Oxidation Process

A conventional wet air oxidation system consists of a high-pressure liquid feed pump, an oxygen source (air compressor or liquid oxygen vaporizer), a reactor, heat exchangers, a vapor-liquid separator, and process regulators. A basic flow diagram is shown in Figure 23-1.

A typical batch wet air oxidation process proceeds as follows. First, a copper catalyst solution may be mixed with the aqueous waste stream if preliminary testing indicates that a catalyst is necessary. The waste is then pumped into the reaction chamber. The aqueous waste is pressurized and heated to the design pressure and temperature, respectively. After reaction conditions have been established, air is fed to the reactor for the duration of the design reaction time. At the completion of the wet air oxidation process, suspended solids or gases are removed and the remaining treated aqueous waste is either discharged directly or fed to a biological treatment, carbon adsorption, or chemical oxidation treatment system if further treatment is necessary prior to discharge.

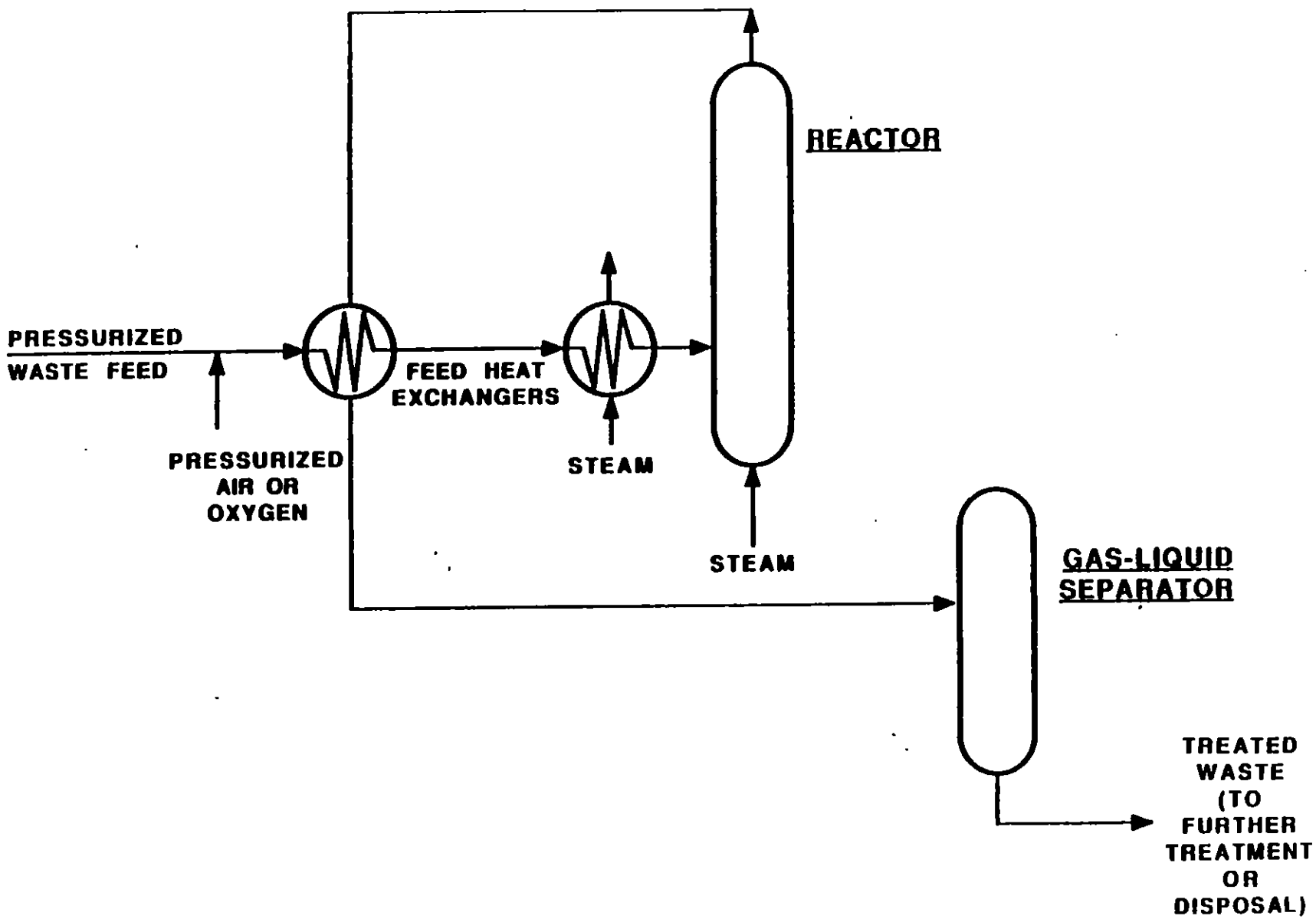

FIGURE 23-1 WET AIR OXIDATION PROCESS FLOW DIAGRAM.

Wet air oxidation can also be operated in a continuous process. In continuous operation, the waste is pressurized, mixed with pressurized air or oxygen, preheated in a series of heat exchangers by the hot reactor effluent and steam, and fed to the reactor. The waste feed flow rate controls the reactor residence time. Steam is fed into the reactor column to adjust the column temperature. The treated waste is separated in a gas-liquid separator, with the gases treated in an air pollution control system and/or discharged to the atmosphere, and the liquids either further treated, as mentioned above, and/or discharged to disposal.

23.4 Waste Characteristics Affecting Performance (WCAPs)

In determining whether wet air oxidation will achieve the same level of performance on an untested waste as on a previously tested waste and whether performance levels can be transferred, EPA examines the following waste characteristics: (a) the chemical oxygen demand and (b) the concentration of interfering substances.

23.4.1 Chemical Oxygen Demand

The chemical oxygen demand (COD) of the waste is a measure of the oxygen required for complete oxidation of the oxidizable waste constituents. The limit to the amount of oxygen that can be supplied to the waste is dependent on the solubility of oxygen in the aqueous waste and the rate of dissolution of oxygen from the gas phase to the liquid phase. This sets an upper limit on the amount of oxidizable compounds that can be treated by wet air oxidation. Thus, high-COD wastes may

require dilution for effective treatment to occur. If the COD of the untested waste is significantly higher than that of the tested waste, the system may not achieve the same performance. Pretreatment of the waste or dilution as part of treatment may be needed to reduce the COD to within levels treatable by the dissolved oxygen concentration and to achieve the same treatment performance, or other, more applicable treatment technologies may need to be considered for treatment of the untested waste.

23.4.2 Concentration of Interfering Substances

In some cases, addition of a water-soluble copper salt catalyst to the waste before processing is necessary for efficient oxidation treatment (for example, for oxidation of some halogenated organics). Other metals have been tested and have been found to be less effective. Interfering substances for the wet air oxidation process are essentially those that cause the formation of insoluble copper salts when copper catalysts are used. To be effective in catalyzing the oxidation reaction, the copper ions must be dissolved in solution. Sulfide, carbonate, and other negative ions that form insoluble copper salts may interfere with treatment effectiveness if they are present in significant concentrations in wastes for which copper catalysts are necessary for effective treatment. If an untested waste for which a copper catalyst is necessary for effective treatment has a concentration of interfering substances (including sulfide, carbonate, or other anions that form

insoluble copper salts) significantly higher than that in a tested waste, the system may not achieve the same performance and other, more applicable treatment technologies may need to be considered for treatment of the untested waste.

23.5 Design and Operating Parameters

In assessing the effectiveness of the design and operation of a wet air oxidation system, EPA examines the following parameters: (a) the oxidation temperature, (b) the residence time, (c) the excess oxygen concentration, (d) the oxidation pressure, and (e) the amount and type of catalyst.

23.5.1 Oxidation Temperature

Temperature is the most important parameter affecting the system. The design temperature must be high enough to allow the oxidation reactions to proceed at acceptable rates. Raising the temperature increases the wet air oxidation rate by enhancing oxygen solubility and oxygen diffusivity. The process is normally operated in the temperature range of 175 to 325°C (347 to 617°F), depending on the hazardous constituent(s) to be treated. EPA monitors the oxidation temperature continuously, if possible, to ensure that the system is operating at the appropriate design condition and to diagnose operational problems.

23.5.2 Residence Time

The residence time impacts the extent of oxidation of waste contaminants. For a batch system, the residence time is controlled

directly by adjusting the treatment time in the reaction tank. For a continuous system, the waste feed rate is controlled to make sure that the system is operated at the appropriate design residence time. Generally, the reaction rates are relatively fast for the first 30 minutes and become slow after 60 minutes. Typical residence times, therefore, are approximately 1 hour. EPA monitors the residence time to ensure that sufficient time is provided to effectively oxidize the waste.

23.5.3 Excess Oxygen Concentration

The system must be designed to supply adequate amounts of oxygen for the compounds to be oxidized. An estimate of the amount of oxygen needed can be made based on the COD content of the untreated waste; excess oxygen should be supplied to ensure complete oxidation. The source of oxygen is compressed air or a high-pressure pure oxygen stream. EPA monitors the excess oxygen concentration (the concentration of oxygen in the gas leaving the reactor) continuously, if possible, by sampling the vent gas from the gas-liquid separator to ensure that an effective amount of oxygen or air is being supplied to the waste.

23.5.4 Oxidation Pressure

The design pressure must be high enough to prevent excessive evaporation of water and volatile organics at the design temperature. This allows the oxidation reaction to occur in the aqueous phase, thereby improving treatment effectiveness. EPA monitors the oxidation pressure continuously, if possible, to ensure that the system is operating at the appropriate design condition and to diagnose operational problems.

directly by adjusting the treatment time in the reaction tank. For a continuous system, the waste feed rate is controlled to make sure that the system is operated at the appropriate design residence time. Generally, the reaction rates are relatively fast for the first 30 minutes and become slow after 60 minutes. Typical residence times, therefore, are approximately 1 hour. EPA monitors the residence time to ensure that sufficient time is provided to effectively oxidize the waste.

23.5.3 Excess Oxygen Concentration

The system must be designed to supply adequate amounts of oxygen for the compounds to be oxidized. An estimate of the amount of oxygen needed can be made based on the COD content of the untreated waste; excess oxygen should be supplied to ensure complete oxidation. The source of oxygen is compressed air or a high-pressure pure oxygen stream. EPA monitors the excess oxygen concentration (the concentration of oxygen in the gas leaving the reactor) continuously, if possible, by sampling the vent gas from the gas-liquid separator to ensure that an effective amount of oxygen or air is being supplied to the waste.

23.5.4 Oxidation Pressure

The design pressure must be high enough to prevent excessive evaporation of water and volatile organics at the design temperature. This allows the oxidation reaction to occur in the aqueous phase, thereby improving treatment effectiveness. EPA monitors the oxidation pressure continuously, if possible, to ensure that the system is operating at the appropriate design condition and to diagnose operational problems.

NTIS does not permit return of items for credit or refund. A replacement will be provided if an error is made in filling your order, if the item was received in damaged condition, or if the item is defective.

Reproduced by NTIS
National Technical Information Service
U.S. Department of Commerce
Springfield, VA 22161

This report was printed specifically for your order from our collection of more than 2 million technical reports.

For economy and efficiency, NTIS does not maintain stock of its vast collection of technical reports. Rather, most documents are printed for each order. Your copy is the best possible reproduction available from our master archive. If you have any questions concerning this document or any order you placed with NTIS, please call our Customer Services Department at (703)487-4660.

Always think of NTIS when you want:
- Access to the technical, scientific, and engineering results generated by the ongoing multibillion dollar R&D program of the U.S. Government.
- R&D results from Japan, West Germany, Great Britain, and some 20 other countries, most of it reported in English.

NTIS also operates two centers that can provide you with valuable information:
- The Federal Computer Products Center - offers software and datafiles produced by Federal agencies.
- The Center for the Utilization of Federal Technology - gives you access to the best of Federal technologies and laboratory resources.

For more information about NTIS, send for our FREE *NTIS Products and Services Catalog* which describes how you can access this U.S. and foreign Government technology. Call (703)487-4650 or send this sheet to NTIS, U.S. Department of Commerce, Springfield, VA 22161. Ask for catalog, PR-827.

Name _____
Address _____
_____
_____
Telephone _____

- Your Source to U.S. and Foreign Government Research and Technology.

Background Document H, Reference 19

U.S. Environmental Protection Agency, 1994, BDAT Background Documentation for Universal Standards, Washington, D.C.

This is not a key reference. For information on ordering this document, contact the RCRA Superfund and EPCRA hotline: 1-800-424-9346 (www.epa.gov/epaoswer/hotline) or order directly from NTIS: 1-800-553-6847 (Volume A: PB95-230926; Volume B: PB95-230935)